PARTS MANUAL

LOAD KING

50-155 M & 50-155 U

REV A

APRIL, 2022

NOTE: This Manual is applicable for both 50-155 M and 50-155 U

WARNING Operating, servicing and maintaining this equipment can expose you to chemicals including engine exhaust, carbon monoxide, phthalates, and lead, which are known to the State of California to cause cancer and birth defects or other reproductive harm. These chemicals can be emitted from or contained in other various parts and systems, fluids and some component wear by-products. To minimize exposure, avoid breathing exhaust, do not idle the engine except as necessary, service your equipment and vehicle in a well-ventilated area and wear gloves or wash your hands frequently when servicing your equipment or vehicle and after operation. For more information go to www.P65Warnings.ca.gov/passenger-vehicle.

Breathing diesel engine exhaust exposes you to chemicals known to the State of California to cause cancer and birth defects or other reproductive harm.

- Always start and operate the engine in a well-ventilated area.
- If in an enclosed area, vent the exhaust to the outside.
- Do not modify or tamper with the exhaust system.
- Do not idle the engine except as necessary.

For more information go to www.P65warnings.ca.gov/diesel.

LOAD KING WARRANTY

Load King (herein after referred to as the COMPANY) warrants all products manufactured by it and purchased by you to be free from defects in material and manufacture at the time of shipment, for one (1) year from date of delivery. The COMPANY will furnish replacements for such parts as the COMPANY finds to have been defective at the time of delivery or, at the COMPANY's option, will make or authorize repairs to such parts, provided that, upon request, such parts are returned, transportation is prepaid to the factory from which they were shipped.

This warranty shall not apply to any Product which has been subjected to misuse, misapplication, overloading, neglect (including but not limited to use of unauthorized parts or attachments), adjustments or repair. Engines, motor, tires, wheels, suspensions, axles, etc. and any accessories furnished with or used in the COMPANY's products, but which are not manufactured by the COMPANY, are not warranted by the COMPANY but are sold only with the express warranty, if any, or the manufacturers thereof. This warranted is limited to the first purchaser/user and is not transferable.

THE FOREGOING IS IN LIEU OF ALL OTHER WARRANTIES, WHETHER EXPRESSED OR IMPLIED (INCLUDING, WITHOUT LIMITATIONS, OF MERCHANTABILITY AND FITNESS OF ANY PRODUCT FOR A PARTICULAR PURPOSE), AND OF ANY OTHER OBLIGATION OR LIABILITY ON THE PART OF THE COMPANY. THERE ARE NO WARRANTIES WHICH EXTEND BEYOND THE DESCRIPTION OF THE FACE THEREOF.

LIMITATION OF LIABILITY

It is expressly understood and agreed by you that the COMPANY's liability for its products, whether due to breach of warranty, or otherwise is limited to the furnishing of such replacement parts, F.O.B.

factory, and the COMPANY will not be liable for any other injury, loss, damage, or expense, whether direct or consequential, including but not limited to loss of use, income, profit, or production, injury to person or increase in cost of operation, spoilage of or damage to material, arising out of or in connection with the sale, installation, use or inability to use, or the repair or replacement of the COMPANY's products.

All used vehicles and/or bodies are sold in the "AS IS" condition and no expressed or implied warranty is made.

All of COMPANY'S Products are of high quality and are manufactured in conformity with the best commercial practices in the various lines. The COMPANY guarantees all Products manufactured by it to be free from defects in material and manufactured at the time of shipment, for one (1) year from date of delivery. In addition, the COMPANY guarantees the portion of the product to be considered structural for one (1) year from date of manufacture.

While Load King, LLC. designs and manufactures its specific equipment configurations to industry standards, it is ultimate responsibility of the buyer/operator to assure that all loads are properly loaded and distributed. All loads must comply with the applicable state and federal load limits.

INSTRUCTIONS FOR ORDERING PARTS

When ordering parts, contact your nearest Load King distributor and give the following information to assure prompt service:

MACHINE IDENTIFICATION:

State the model and Product Identification Number (PIN), located on the plate in the Operator's Cab.

The six digit serial number is shown on a plate on the outside front of the operator's cab for convenient access.

PART IDENTIFICATION:

State the part number, description and quantity required. Do not use the item number. Avoid using the words "Pairs" or "Sets".

SHIPPING INSTRUCTIONS:

State the invoicing address. Unless otherwise specified, invoices will be mailed to the shipping address.

State the correct shipping address and the means of shipment: parcel post, air mail, air freight, UPS, bus, etc.

REF	PART.NO.	DESCRIPTION
	T139803	Mirror, Convex..... 1

Load King
7701 Independence Ave, Kansas City, MO
64125
Parts: (816) 241- 8387
Service: (833) 281-7911
info@loadkingmfg.com

USING THIS PARTS BOOK

This Parts Manual has been designed for optimum ease of reading and is the key to Customer-Distributor-Factory communication. Genuine replacement parts, along with interchangeable product improvements as they become available, will keep your machine in a reliable and productive condition.

The following instructions describe the features of the manual and how to use it effectively.

Use this manual also as a supplement to the Operator's Manual and Maintenance Manual when performing service procedures on the machine.

IMPORTANT

This manual lists serviceable parts for **EVERY** machine built of this model designation. Serial numbers are used to identify parts when a product improvement is made or an alternate component is used. **KNOW THE SERIAL NUMBER OF YOUR MACHINE** before searching for replacement parts.

The **PARTS CHAPTER INDEX** shows the functional arrangement of associated parts for the machine. A chapter number identifies the same chapter of parts regardless of model (Chapter 2 is always the Lower Structure). The chapters which apply to the machine are listed in numerical order.

PAGE NUMBERS are in numerical sequence within each parts chapter.

EXPLODED VIEW ILLUSTRATIONS show the relationship of assembled parts. The illustrations are keyed to an accompanying parts list on the same page or on the facing page and are positioned for ease in reading the manual.

LOCATING INDIVIDUAL PARTS

1. Turn to the PARTS CHAPTER INDEX and find the general area of the part in question. (Example: Seat would be found in “Operator’s Cab” chapter 1).
2. Refer to the parts chapter and check to see if a subsequent letter-designated chapter is used. Check the title block on the pages to determine the application of the chapter to your particular machine.

ENGINE	2

FILTER	5

3. Major assemblies are shown at the beginning of each chapter with page references to component parts breakdowns on the pages which follow. Briefly skim through the chapter to familiarize yourself with the information included in it. Locate the illustration and parts list which pertain to the assembly or part you desire. Compare the serial number of your machine to those which may appear on the page to be sure you are ordering the correct part.
4. Item numbers on the illustration correspond to those in the parts list. Parts not shown with an item number are the same as identical or symmetrical parts with an item number. Parts keyed with an asterisk or other symbol are included in a repair kit. If no part number is shown, these parts cannot be ordered separately.
5. Quantities are shown as required per component assembly unless otherwise noted.
6. If an assembly is listed without any serviceable parts, it must be ordered complete. Serviceable parts of components are listed under the component part or a subsequent page as indicated.
7. All hardware shown without the size listed after the noun name is specially made for the particular application and must not be substituted standard hardware.

TABLE OF CONTENTS

50-155 M & 50-155 U UPPER STRUCTURE..... 11
SUPERSTRUCTURE INSTALLATION 13
HOUSELOCK INSTALLATION 15
CAB MOUNT ASSEMBLY 17
CAB, UPPER S-PACE OPERATOR 19
CAB SUPPLIER ASSEMBLY 21
DOOR ASSEMBLY 27
UPPER DOOR GUIDE ASSEMBLY 29
FRONT WIPER ASSEMBLY 31
ROOF HATCH ASSEMBLY 33
WIPER ROOF 35
FRONT WINDSHIELD 37
SEAT ASSEMBLY 39
OPERATOR SEAT 41
CAB INTERIOR INSTALLATION 43
FRONT UPPER DASH ASSEMBLY 47
CAB ELECTRICAL INSTALLATION 49
BOOM ASSEMBLY 55
JIB STOWAGE 73
JIB ASSEMBLY, 32’- 49’ 77
NYLON BOOM HEAD SHEAVE 5/8 ASSEMBLY 83
BOOM HEAD SHEAVE ASSEMBLY 85
WIRE ROPE SHEAVE ASSEMBLY 87
50-155 M & 50-155 U COUNTERWEIGHT OPTIONS 89
10,000# COUNTERWEIGHT W/AUX WINCH 91
4,500# COUNTERWEIGHT W/O AUX WINCH 103
4,500# COUNTERWEIGHT 105
PANEL ASSY, COVER- CTWT 107
WELDMENT, DECKING NON-HL 109
UTILITY CRANE COUNTERWEIGHT 111
HEAVYLIFT INSTALLATION W/O AUX WINCH 113
50-155 M & 50-155 U HOOK BLOCK OPTIONS 119
HOOK BLOCK ASSY, 1 SHEAVE, 20 TON 121
HOOK BLOCK ASSY, 3 SHEAVE, 35 TON 123
HOOK BLOCK ASSY, 4 SHEAVE, 50 TON 125
UPPER HYDRAULICS ASSEMBLY 127
UPPER ELECTRICAL ASSEMBLY 155
LMI ASSEMBLY 157
PIN INSTALLATION 163
50-155 M & 50-155 U OVERHAUL BALL OPTION 165
OHAUL BALL ASSY, 12 TON 167
OHAUL BALL ASSY, 8 TON 169
XO MAIN WINCH CABLE OPTIONS 171
ROTATE-RESIST CABLE 5/8 X 500 173
WEDGE 5/8 MAIN/AUX -CABLE 175
WEDGE & SOCKET, 5/8 INCH 177
STANDARD CABLE 5/8 X 500 179
ROPE OPTIONS 181
BOOM REST INSTALLATION 183
CROSSOVER CONTROLS 185
CAB COVERS - NO HEATER OPTION 187
DELUXE AC AND FLAMELESS HEATER 189
HVAC KIT 193
BLOWER UNIT 195
BLOWER ASSEMBLY, AC & OIL HEAT 197
CONTROLLER, PROGRAMMED 199
HOSE & DRIVE MOUNTING KIT 201
KIT, MD 9037/47/57 MTG 203
HYDRAULIC DRIVE UNIT 205
ASSEMBLY, BELT TENSIONER 209
50-155 M & 50-155 U LOWER STRUCTURE..... 213
CENTER STRUCTURE INSTALLATION 215
DECK INSTALLATION 217
PLATFORM INSTALLATION 219
PLATFORM ASSEMBLY 221
MOUNTING KIT, DECK 223

TABLE OF CONTENTS

DECK KIT....225
LADDER ASSEMBLY....227
XO FENDER OPTIONS....229
FENDERS 55 INCH AXLE CTR....231
FENDERS 60 INCH AXLE CTR....233
FENDERS 55 INCH AXLE CTR W/PUSHER....235
OUTRIGGER INSTALLATION....237
OUTRIGGER ASSEMBLY-REAR LH....239
OUTRIGGER ASSEMBLY-FRONT-RH....241
OUTRIGGER ASSEMBLY-FRONT-RH....242
OUTRIGGER ASSEMBLY- FRONT-LH....243
OUTRIGGER ASSEMBLY REAR -RH....245
REAR BUMPER ASSEMBLY....247
LOWER ELECTRIC ASSEMBLY....249
PUMP/PTO OPTION....279
PUMP ASSEMBLY, ALLISON TRANSMISSION....281
PUMP ASSEMBLY, EATON TRANSMISSION....285
50-155 M & 50-155 U XO HOSE OPTIONS....289
HOSE VARIANT, 50-155 M & 50-155 U ALLISON....291
HOSE VARIANT, 50-155 M & 50-155 U EATON....295
SWING BEARING INSTALLATION....299
KIT, SWING BEARING INSTL....301

OPTIONAL EQUIPMENT....303

50-155 M & 50-155 U - MAN BASKET OPTIONS....307
2-MAN PLATFORM INSTALLATION....309
MAN BASKET BRACKET ASSEMBLY....311
LONG STRAIGHT MAN BASKET....313
50-155 M & 50-155 U BASKET STOWAGE INSTALLATION....319
WORK LIGHT INSTALLATION....321
STROBE LIGHT INSTALLATION....325
REVOLVING AMBER LIGHT INSTALLATION....327
NO RADIO OPTION....329
RADIO OPTION....331
50-155 M & 50-155 U AUX WINCH OPTION....333
AUX WINCH ASSEMBLY....335
AUX HEAD ASSEMBLY....337
COLD WEATHER OPTIONS....339
HYD. IMMERSION HEATER,120/240V....341
HEATER, IMMERSION....343
BELLY PACK ONLY....347
BELLY PACK FOR LUFFING JIB....349

PAINT & MARKING....351

50-155 M & 50-155 U MARKING OPTIONS....353
50-155 M & 50-155 U BOOM DECAL KIT....355
50-155 M & 50-155 U CAB DECAL KIT....357
50-155 M & 50-155 U SUPER STRUCTURE DECAL KIT....359

MANUALS....363

50-155 M & U MANUAL PACKS OPTIONS....365
50-155 M & U MANUAL PACKS, EN-SP-FR....367

RECOMMENDED SPARE PARTS....369

CHAPTER NO. 1

50-155 M & 50-155 U UPPER STRUCTURE

PAGE INTENTIONALLY LEFT BLANK

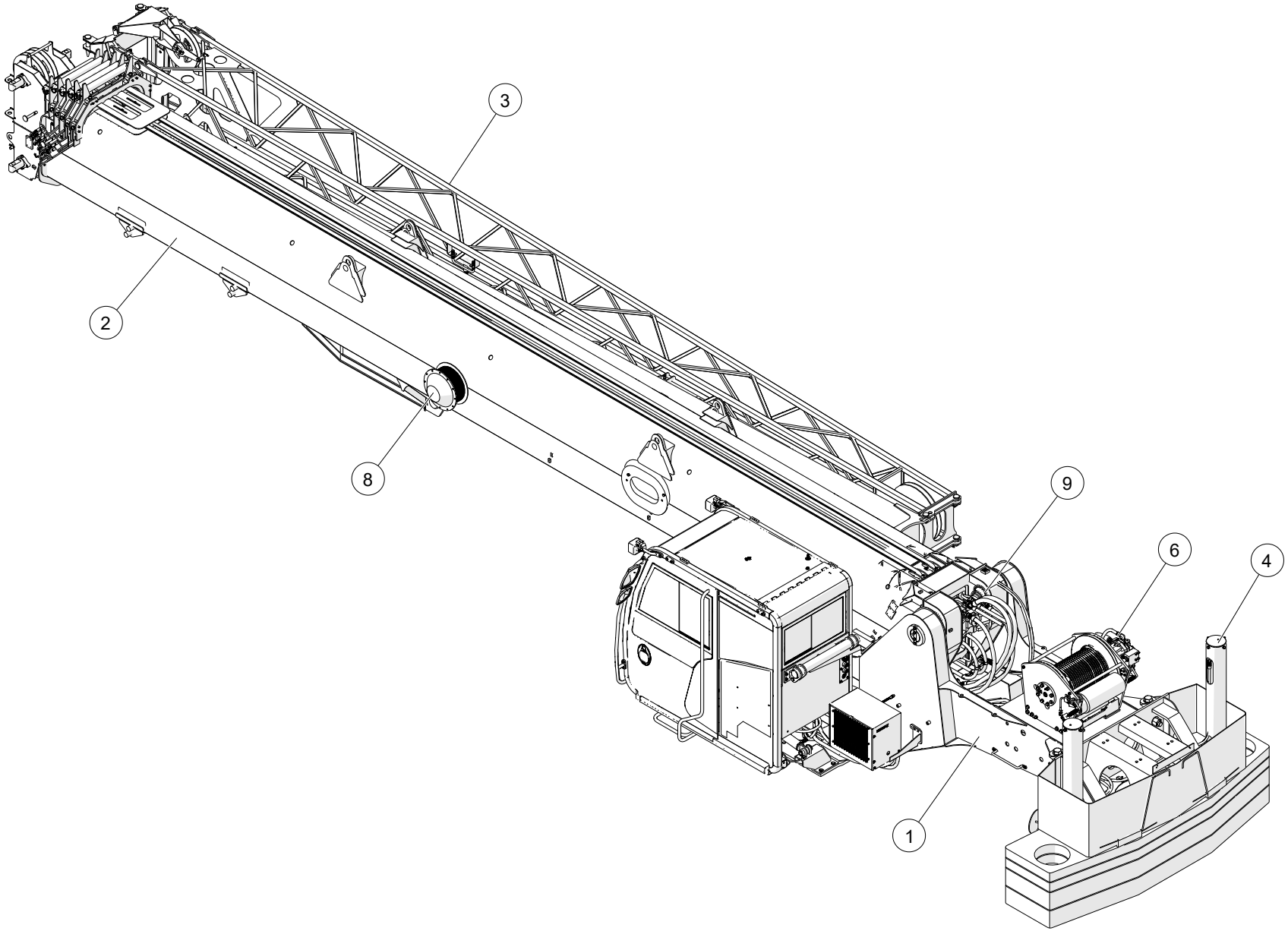

WHEN ORDERING PARTS, SPECIFY MODEL NUMBER, SERIAL NUMBER AND DESCRIPTION OF PARTS REQUIRED

ITEM	PART NUMBER	DESCRIPTION	QUANTITY	NOTES
	50-155 M & 50-155 U	**50-155 M & 50-155 U UPPER STRUCTURE**		
1	**1035167**	SUPERSTRUCTURE INSTALLATION	1	SEE PAGE 13
2	**1032204**	BOOM ASSEMBLY, 155 FT, 50TON	1	SEE PAGE 55
3	**1036225**	JIB STOWAGE	1	SEE PAGE 73
4	**1035229****	50-155 M & 50-155 U COUNTERWEIGHT OPTIONS	1	SEE PAGE 89
5*	**1035226****	50-155 M & 50-155 U HOOK BLOCK OPTION	1	SEE PAGE 119
6	**1035156**	UPPER HYDRAULICS ASSEMBLY	1	SEE PAGE 127
7*	**1035203**	UPPER ELECTRICAL ASSEMBLY	1	SEE PAGE 155
8	**1035240**	LMI ASSEMBLY	1	SEE PAGE 157
9	**1033380**	PIN INSTALLATION	1	SEE PAGE 163
10*	**1035134**	50-155 M & 50-155 U OVERHAUL BALL OPTION	1	SEE PAGE 165
11*	**1032739**	XO MAIN WINCH CABLE OPTIONS	1	SEE PAGE 171
12*	**1032741**	ROPE OPTIONS	1	SEE PAGE 181
13*	**1029840**	BOOM REST INSTALLATION	1	SEE PAGE 183
14*	**1031357**	CROSSOVER CONTROLS	1	SEE PAGE 185
15*	**1027154**	CAB COVERS - NO HEATER OPTION	1	SEE PAGE 187
16*	**1032800**	DELUXE AC AND FLAMELESS HEATER	1	SEE PAGE 189

NOTE: *NOT SHOWN IN THE ILLUSTRATION

**NOT SERVICEABLE AT THIS LEVEL

WHEN ORDERING PARTS, SPECIFY MODEL NUMBER, SERIAL NUMBER AND DESCRIPTION OF PARTS REQUIRED

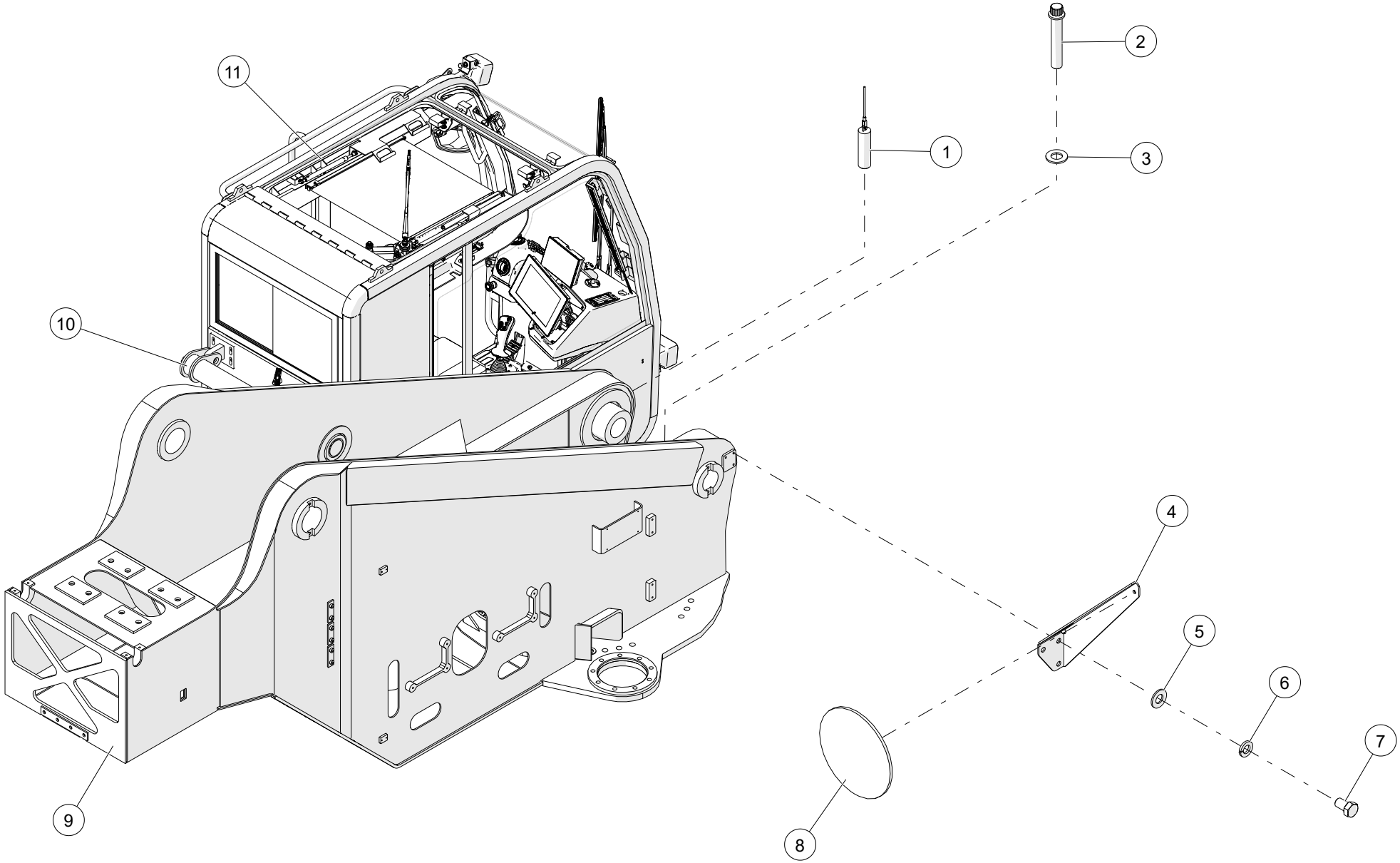

WHEN ORDERING PARTS, SPECIFY MODEL NUMBER, SERIAL NUMBER AND DESCRIPTION OF PARTS REQUIRED

SUPERSTRUCTURE INSTALLATION

ITEM	PART NUMBER	DESCRIPTION	QUANTITY	NOTES
	1035167	**SUPERSTRUCTURE INSTALLATION**		
1	**1033797**	HOUSELOCK INSTALLATION	1	SEE PAGE 15
2	FHCS-C875E009R0	FERRY HEAD CAP SCREW, 7/8-9 X 5 LEN, NF	36	
3	WSH2-X8750008Z0	SAE WASHER, 7/8, GR8, ZN	36	
4	722-0046	MIRROR BRACKET	1	
5	WSH2-X3750008Z0	SAE WASHER, 3/8, GR8, ZN	3	
6	WSH4-X3750008Z0	SPIRAL LOCK WASHER, 3/8, GR8, ZN	3	
7	HHCS-C3756258Z0	HEX HEAD CAP SCREW, 3/8-16 X 5/8 LEN, GR8, ZN	3	
8	706-9604	MIRROR	1	
9	1035072	WELDMENT, SUPERSTRUCTURE	1	
10	**1033397**	CAB MOUNT ASSEMBLY	1	SEE PAGE 17
11	**1031096**	CAB, UPPER S-PACE OPERATOR (T130300)	1	SEE PAGE 19

WHEN ORDERING PARTS, SPECIFY MODEL NUMBER, SERIAL NUMBER AND DESCRIPTION OF PARTS REQUIRED

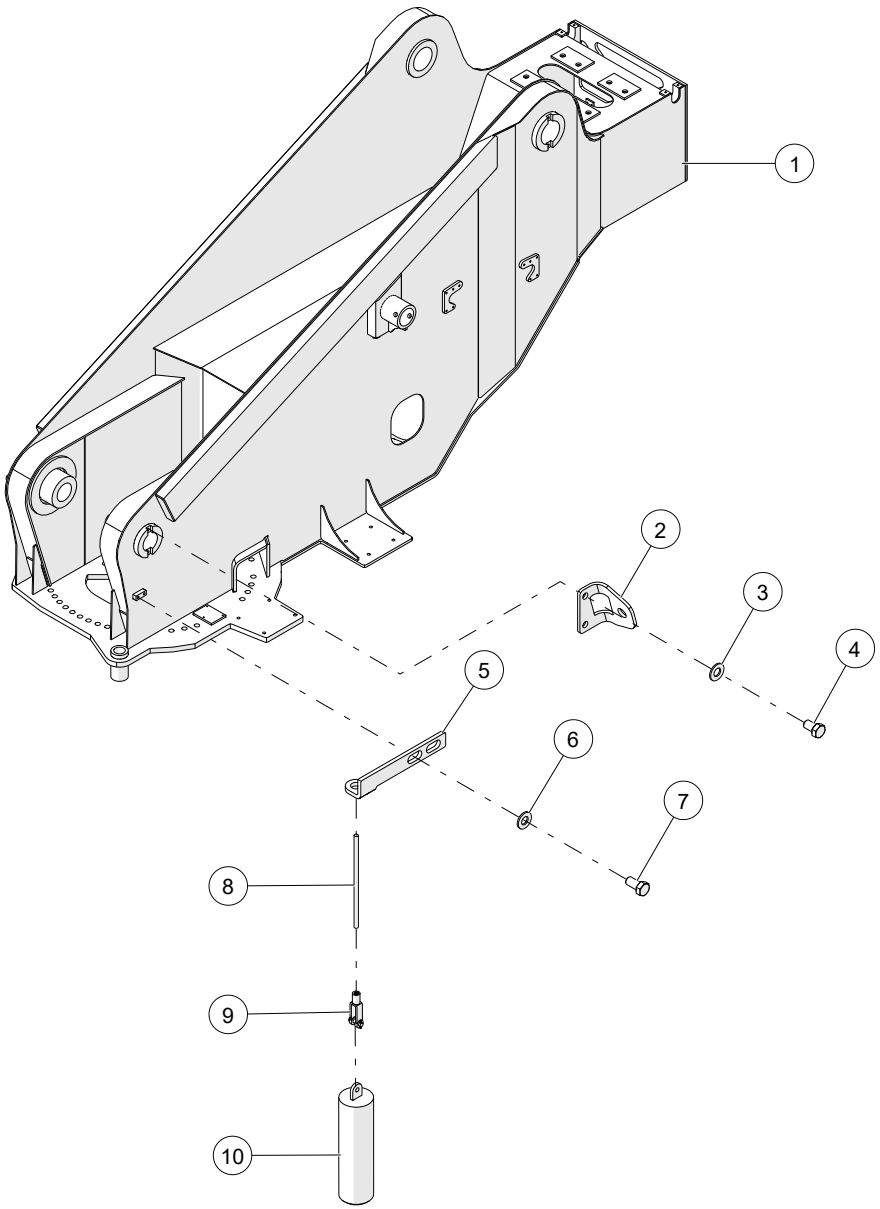

WHEN ORDERING PARTS, SPECIFY MODEL NUMBER, SERIAL NUMBER AND DESCRIPTION OF PARTS REQUIRED

HOUSELOCK INSTALLATION

ITEM	PART NUMBER	DESCRIPTION	QUANTITY	NOTES
	1033797	**HOUSELOCK INSTALLATION**		
1	1035072	WELDMENT, SUPERSTRUCTURE	1	
2	1039581	PLATE, HOUSELOCK MOUNT	1	
3	WSH1-X3750008Z0	WASHER, 3/8, GR8, ZN	2	
4	HHCS-C3756258Z0	HEX HEAD CAP SCREW, 3/8-16 X 5/8 LEN, GR8, ZN	2	
5	1033800	PLATE, BENT HOUSELOCK	1	
6	WSH2-X5000008Z0	SAE WASHER, 1/2, GR8, ZN	2	
7	HHCS-C500A008Z0	HEX HEAD CAP SCREW, 1/2-13 X 1 LEN, GR8, ZN	2	
8	1033897	HOUSELOCK, PUSH PULL CABLE	1	
9	1033804	FORGED CLEVIS ROD END	1	
10	1033796	WELDMENT, HOUSELOCK PIN	1	

WHEN ORDERING PARTS, SPECIFY MODEL NUMBER, SERIAL NUMBER AND DESCRIPTION OF PARTS REQUIRED

CAB MOUNT ASSEMBLY

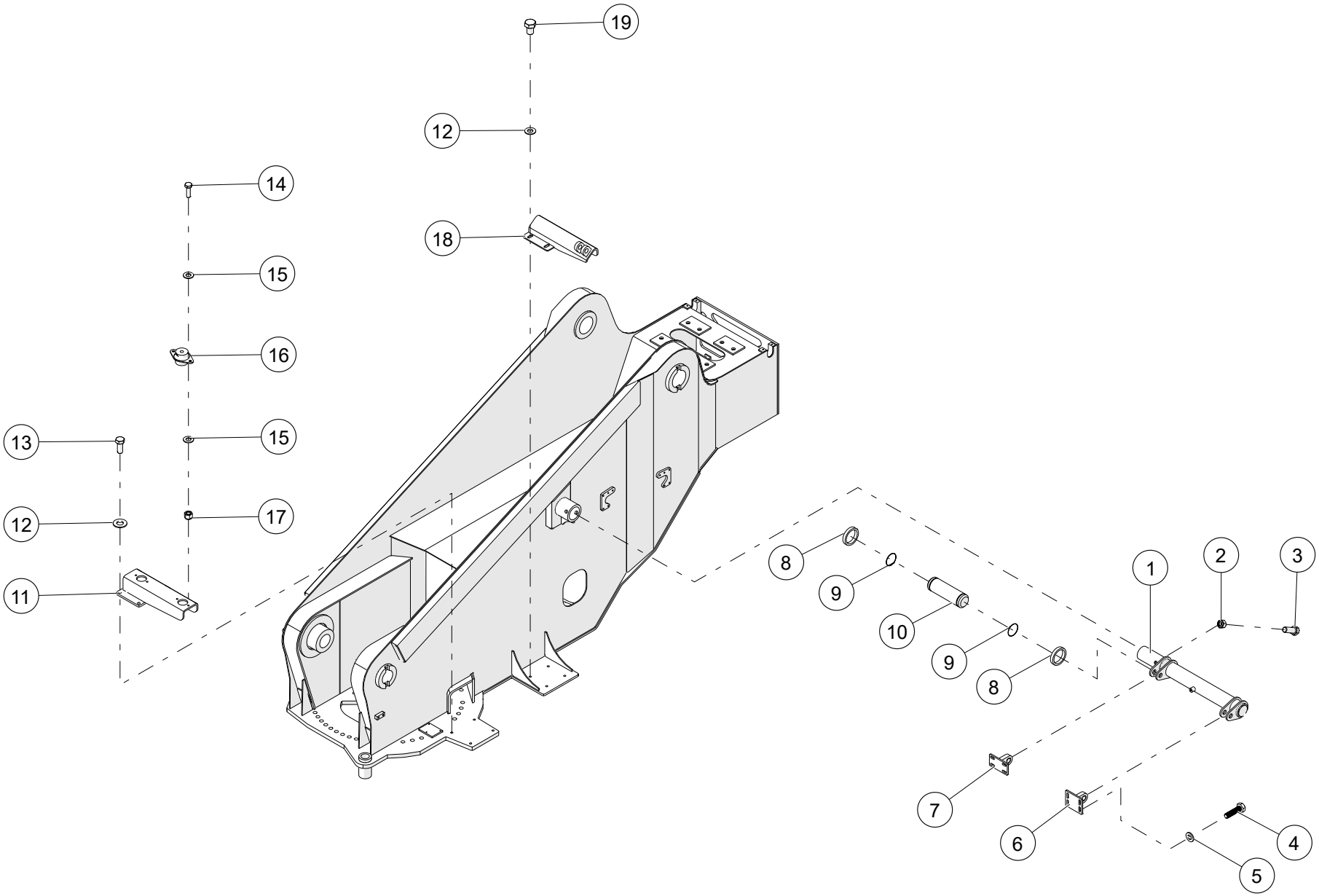

WHEN ORDERING PARTS, SPECIFY MODEL NUMBER, SERIAL NUMBER AND DESCRIPTION OF PARTS REQUIRED

CAB MOUNT ASSEMBLY

ITEM	PART NUMBER	DESCRIPTION	QUANTITY	NOTES
	1033397	**CAB MOUNT ASSEMBLY**		
1	1033394	MOUNT, PIVOT CAB	1	
2	NUT3-C7500008M0	NYLON LOCK NUT, 3/4-10, GR8, MA	1	
3	HHCS-C750E508M0	HEX HEAD CAP SCREW, 3/4-10 X 5 1/2 LEN, GR8, MA	1	
4	91310A635	SCR, HHCS M10-1.5X40 FT, ST Z 10.9	8	
5	93475A280	WSH, FLAT, HARD M10 D125, ST Z	8	
6	1006905	PIVOT ASSY, CAB TILT	1	
7	1006919	PIVOT ASSY, CAB TILT	1	
8	1008757	SPACER	4	
9	1006929	SNAP RING	4	
10	1006907	PIN, CLEVIS HEADLESS, 1.125	2	
11	1035139	WELDMENT, FRONT BRACKET	1	
12	WSH2-X6250008Z0	SAE WASHER, 5/8, GR8, ZN	8	
13	HHCS-C625A508Z0	HEX HEAD CAP SCREW, 5/8-11 X 1 1/2 LEN, GR8, ZN	4	
14	HHCS-C375A258R0	HEX HEAD CAP SCREW, 3/8-16 X 1 1/4 LEN, GR8, NF	4	
15	WSH2-X3750008Z0	SAE WASHER, 3/8, GR8, ZN	8	
16	1006928	MOUNT	2	
17	NUT3-C3750008Z0	NYLON LOCK NUT, 3/8-16, GR8, ZN	4	
18	1035140	WELDMENT, REAR BRACKET	1	
19	HHCS-C6258758Z0	HEX HEAD CAP SCREW, 5/8-11 X 7/8 LEN, GR8, ZN	4	

WHEN ORDERING PARTS, SPECIFY MODEL NUMBER, SERIAL NUMBER AND DESCRIPTION OF PARTS REQUIRED

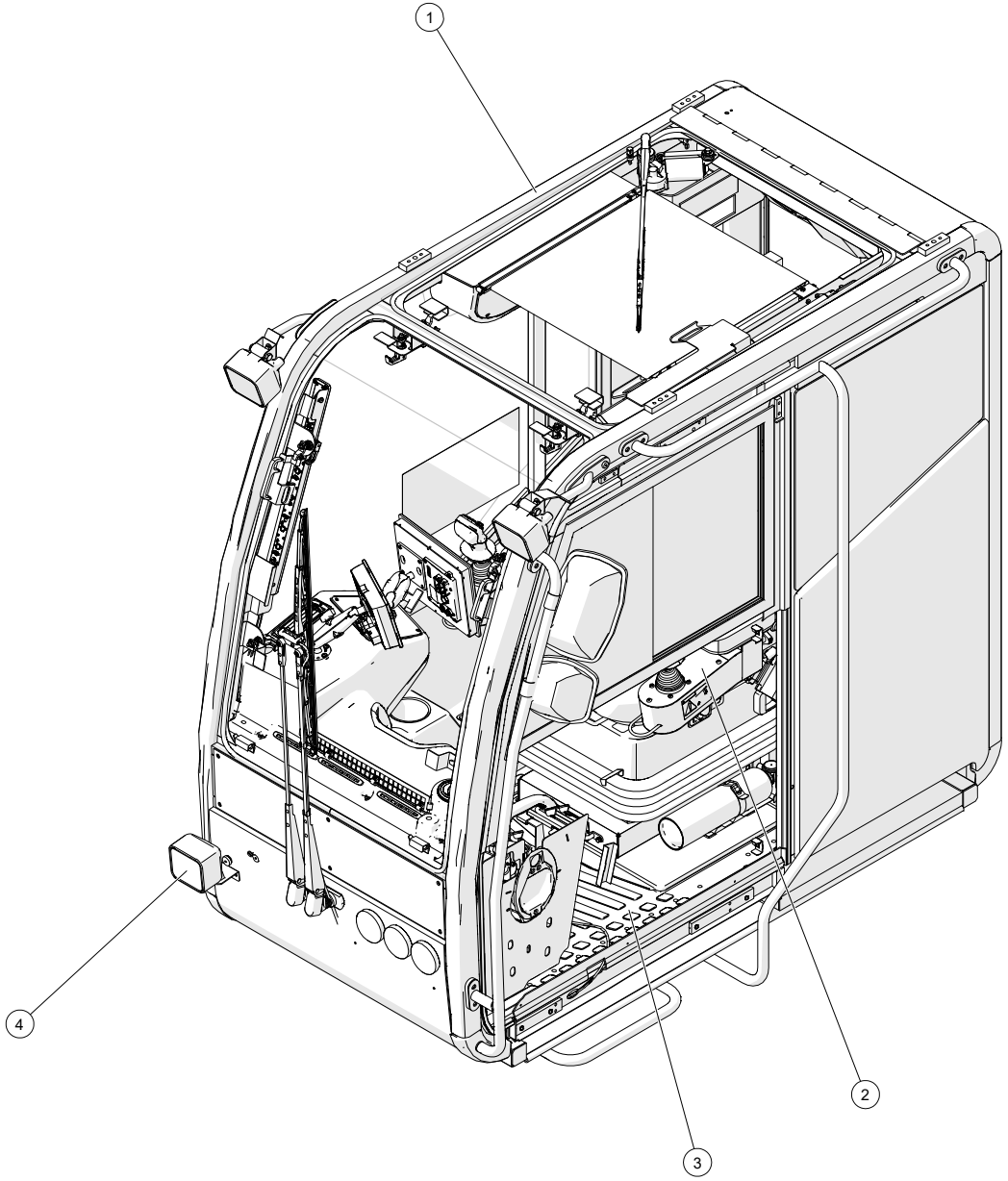

WHEN ORDERING PARTS, SPECIFY MODEL NUMBER, SERIAL NUMBER AND DESCRIPTION OF PARTS REQUIRED

CAB, UPPER S-PACE OPERATOR

ITEM	PART NUMBER	DESCRIPTION	QUANTITY	NOTES
	1031096	**CAB, UPPER S-PACE OPERATOR**		
1	**1035037**	CAB SUPPILER ASSEMBLY	1	SEE PAGE 21
2	**1025700**	SEAT ASSEMBLY	1	SEE PAGE 39
3	**1035053**	CAB INTERIOR INSTALLATION	1	SEE PAGE 43
4	**1027132**	CAB ELECTRICAL INSTALLATION	1	SEE PAGE 49
5*	1031104	CAB UPPER HARNESS	1	

NOTE: * NOT SHOWN IN THE ILLUSTRATION

WHEN ORDERING PARTS, SPECIFY MODEL NUMBER, SERIAL NUMBER AND DESCRIPTION OF PARTS REQUIRED

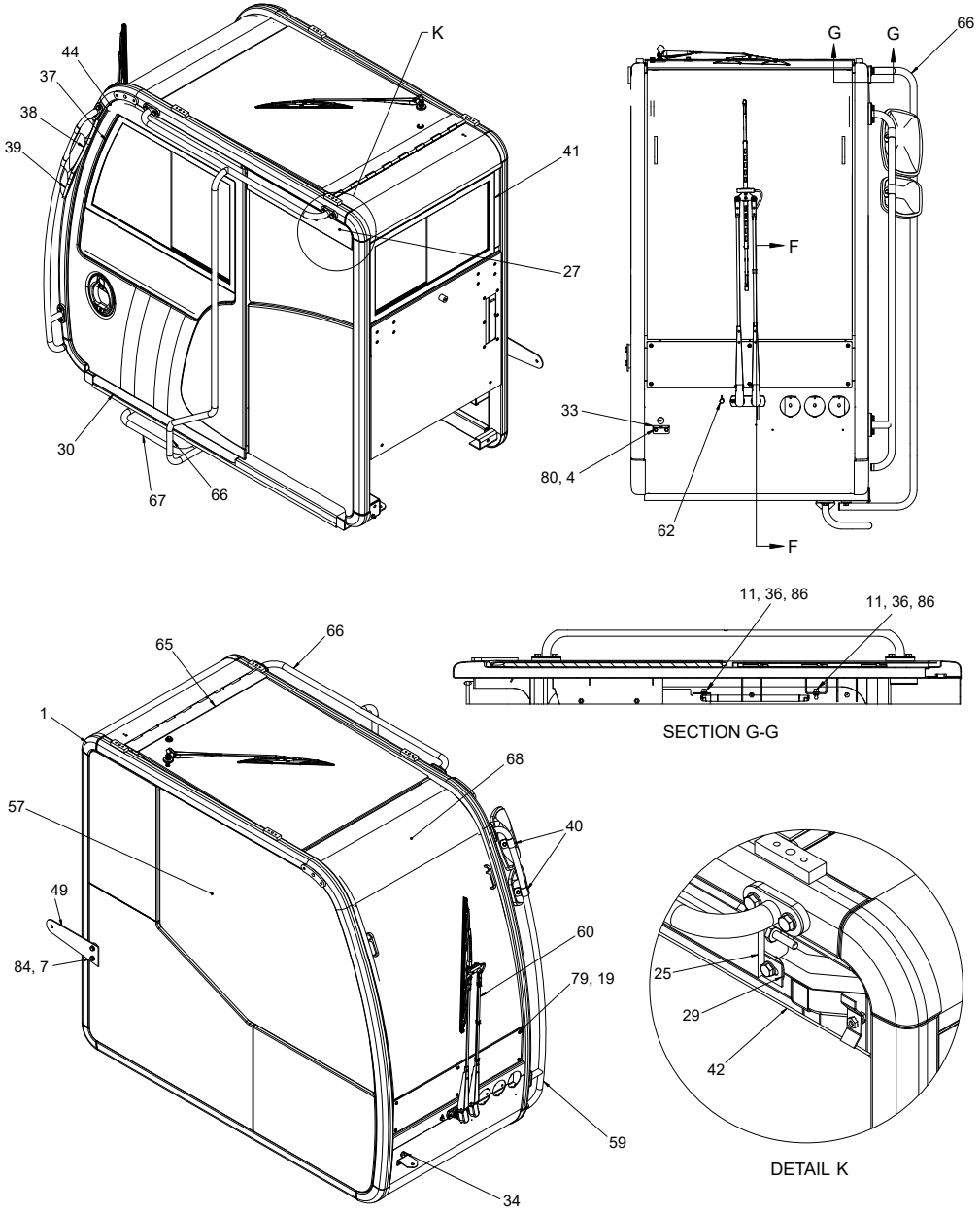

WHEN ORDERING PARTS, SPECIFY MODEL NUMBER, SERIAL NUMBER AND DESCRIPTION OF PARTS REQUIRED

CAB SUPPLIER ASSEMBLY

ITEM	PART NUMBER	DESCRIPTION	QUANTITY	NOTES
	1035037	**CAB SUPPLIER ASSEMBLY**		
1	1035036	CAB FRAME WELDMENT	1	
2	12400-1513	DECAL, WINDOW	1	
3	HHCS-M06A012PZ0	HEX HEAD CAP SCREW, M6-1 X 12, C8.8	1	
4	HHCS-M06A014PZ0	HEX HEAD CAP SCREW, M6-1 X 14, C8.8	2	
5	HHCS-M06A016PZ0	HEX HEAD CAP SCREW, M6-1 X 16, C8.8	25	
6	HHCS-M08B016PZ0	HEX HEAD CAPS SCREW, M8-1.25 X 16, C8.8	4	
7	HHCS-M10C014PZ0	HEX HEAD CAP SCREW, M10-1.5 X 14, C8.8	16	
8	HHCS-M10C018PZ0	HEX HEAD CAP SCREW, M10-1.5 X 18, C8.8	3	
9	HHCS-M508010PZ0	HEX HEAD CAP SCREW, M5-.8 X 10, C8.8	2	
10	NUT1-M12D0005Z0	HEX NUT, M12 X 1.75, GRADE 5 ZINC	1	
11	NUT3-C3130005Z0	NYLON LOCK NUT, 5/16-18, GR5, ZN	2	
12	NUT3-M06A000PZ0	NYLON INSERT NUT, M6-1, STL Z C8	5	
13	NUT3-M08B000PZ0	NYLON HEX NUT, M8-1.25, STL Z C8	2	
14	NUT3-M12D000PZ0	NYLON HEX NUT, M12-1.75, STL Z C8	1	
15	SH02-M06A025QZ0	SHCS, COUNTER SUNK, M6-1 X 25, C10.9	5	
16	SH03-M06A010PZ0	SHCS BUTTON HEAD, M6-1 X 10, C8.8	4	
17	SH03-M06A016PZ0	SHCS BUTTON HEAD, M6-1 X 16, C8.8	9	
18	SH03-M06A020PB0	SHCS BUTTON HEAD, M6 X 1, C8.8 BLK OX	4	
19	SH03-M06A022PB0	SHCS BUTTON HEAD, M6-1 X 22, BLK OX C8.8	6	
20	SH03-M08B020PZ0	SHCS BUTTON HEAD, M8-1.25 X 20, C8.8	2	
21	SH03-M508010QZ0	SHCS BUTTON HEAD, M5 - 0.8 X 10, C10.9	2	
22	T106057	BRUSH, DOOR	1	
23	T106063	STUD, DOOR STOP	1	
24	T106067	STUD, DOOR STOP	3	
25	T106080	SEAL, DOOR	1	
26	T106086	BRACKET, DOOR STRIKER	1	
27	T106546	COVER, DOOR	1	
28	T106551	CLIP DOOR	1	
29	T106755	BRACKET, DOOR	1	
30	T106773	ANTI-SLIP TAPE	1	

WHEN ORDERING PARTS, SPECIFY MODEL NUMBER, SERIAL NUMBER AND DESCRIPTION OF PARTS REQUIRED

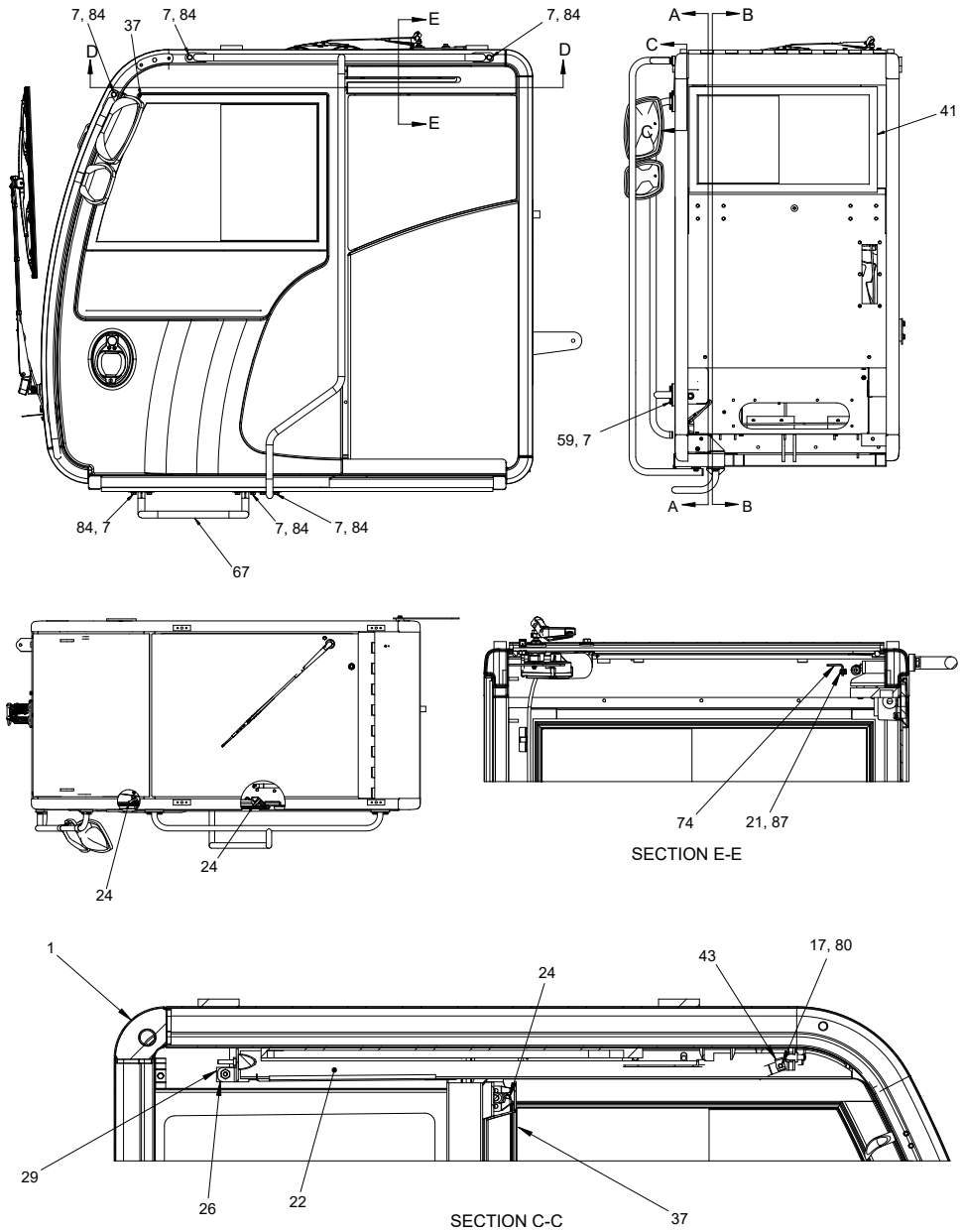

WHEN ORDERING PARTS, SPECIFY MODEL NUMBER, SERIAL NUMBER AND DESCRIPTION OF PARTS REQUIRED

CAB SUPPLIER ASSEMBLY

ITEM	PART NUMBER	DESCRIPTION	QUANTITY	NOTES
	1035037	**CAB SUPPLIER ASSEMBLY**		
31	T111645	STOP, DOOR	1	
32	T111646	STOP, DOOR	1	
33	T111784	BRACKET, LIGHT MOUNTING	1	
34	T111785	GROMMET	1	
35	T111841	LATCH, WINDOW	8	
36	T111848	STUD, GAS CYLINDER MOUNTING	2	
37	**T111882**	DOOR ASSEMBLY	1	SEE PAGE 27
38	T111920	MIRROR, UPPER	1	
39	T111921	MIRROR, LOWER	1	
40	T111922	MIRROR MOUNT KIT	2	
41	T111952	WINDOW, REAR	1	
42	T111953	GLASS LEFT REAR	1	
43	T112319	NUT, CLIP ON M6-1	1	
44	T112363	SEAL, BULB	1	
45	T121363	GUIDE, FRONT LOWER DOOR	1	
46	T121364	GUIDE, REAR LOWER DOOR	1	
47	T121368	BLOCK, THREADED M8-1.25	1	
48	T121506	RESERVOIR, WIPER WASHER FLUID	1	
49	T121507	PLATE, HARNESS SUPPORT	1	
50	T121983	BRACKET, DOOR LATCH	1	
51	T121985	SPACER, M15 OD X 15	2	
52	**T122302**	UPPER DOOR GUIDE ASSEMBLY	1	SEE PAGE 29
53	T122644	PLUG, RIGID PLASTIC	2	
54	T123705	PLATE, DOOR LATCH	1	
55	T124357	PANEL, FRONT LOGO	1	
56	T125126	VALVE, WASHER CHECK	2	
57	T125247	GLASS, RIGHT SIDE	1	
58	T127126	BRACKET, MONITOR MOUNTING	1	
59	T134545	HANDLE, FRONT CAB ENTRY	1	
60	**T134724**	FRONT WIPER ASSEMBLY	1	SEE PAGE 31

WHEN ORDERING PARTS, SPECIFY MODEL NUMBER, SERIAL NUMBER AND DESCRIPTION OF PARTS REQUIRED

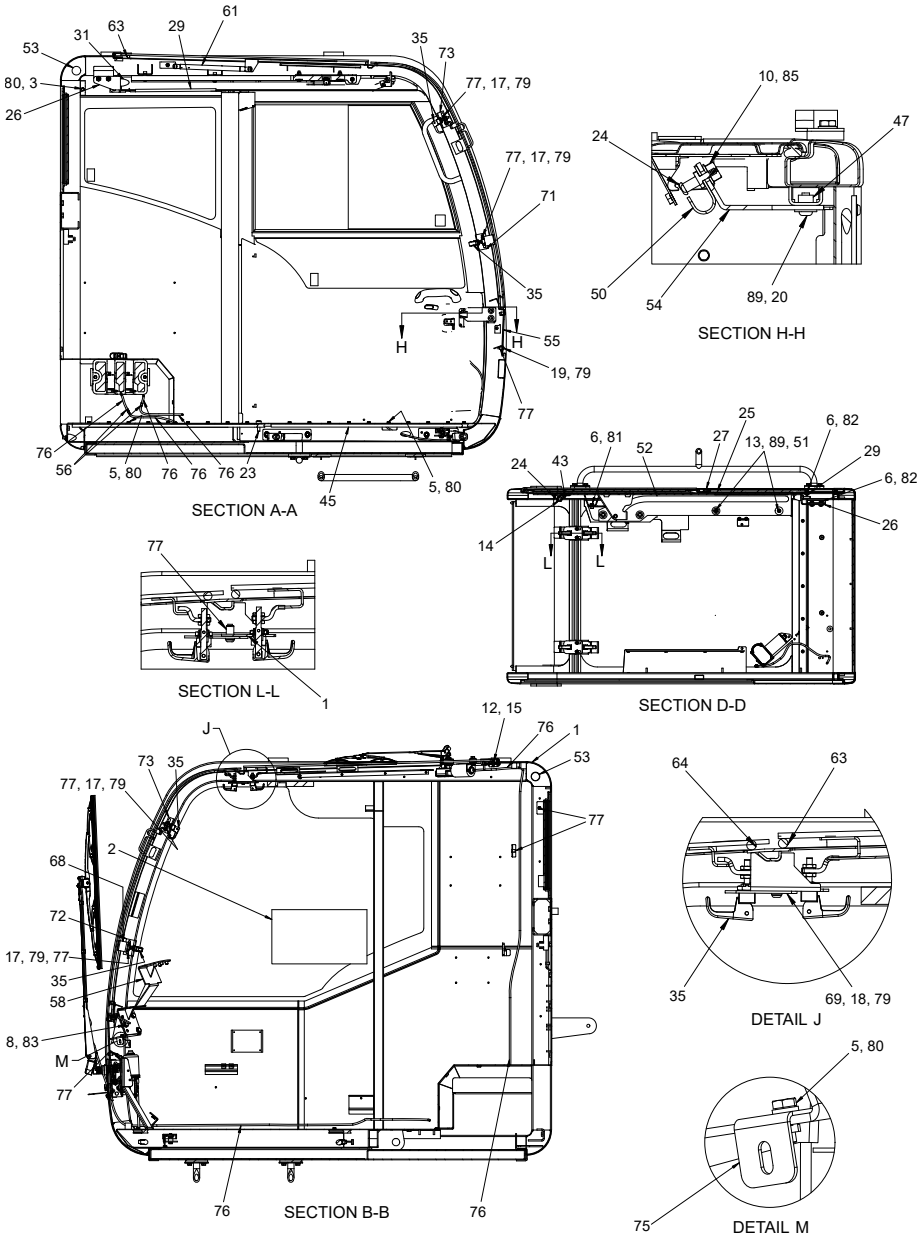

WHEN ORDERING PARTS, SPECIFY MODEL NUMBER, SERIAL NUMBER AND DESCRIPTION OF PARTS REQUIRED

ITEM	PART NUMBER	DESCRIPTION	QUANTITY	NOTES
	1035037	**CAB SUPPLIER ASSEMBLY**		
61	T135177	CYLINDER, ROOF LIFTING GAS	1	
62	T135271	SPRAYER, WIPER MIST	1	
63	T135614-3360	SEAL, BULB	1	
64	T135614-3845	SEAL, BULB	1	
65	**T135765**	ROOF HATCH ASSEMBLY	1	SEE PAGE 33
66	T136466	HANDLE, CAB ENTRY	1	
67	T136585	HANDLE, LOWER CAB ENTRY	1	
68	**T138734**	WINDSHIELD, FRONT	1	SEE PAGE 37
69	T140285	PLATE, LATCH MOUNTING	2	
70	T140287	PLATE, FRONT GLASS REST	2	
71	T141573	BRACKET, LEFT WINDOW LATCH	1	
72	T141574	BRACKET, RIGHT WINDOW LATCH	1	
73	T141575	BRACKET, RIGHT WINDOW LATCH	2	
74	T142654	BRACKET, SUNSHADE MOUNTING	1	
75	T147294	BRACKET, RELAY MOUNT	1	
76	T148370	TUBING, 3/16" ID	231	TO BE ORDERED IN INCHES
77	V01-06AM014-20	RVT, FLGHD M6 X 1 X 14.73, ST	28	
78	V01-407M011-20	RVT, FLGHD M6 X 0.7X 11.94, ST	1	
79	WSH1-X06A000XB0	WASHER, M6, STL BLK OX	18	
80	WSH1-X06A000XZ0	WASHER, M6, STEEL, ZINC PLATED	33	
81	WSH1-X08B000PZ0	WASHER, FLAT M8 DIN125, ST SQC	1	
82	WSH1-X08B000XZ0	WASHER, M8, STEEL, ZINC PLATED	3	
83	WSH1-X10C000PZ0	WASHER, M10, STEEL, ZINC PLATED, CL 8.8	3	
84	WSH1-X10C000XZ0	WASHER, M10, STEEL, ZINC PLATED	16	
85	WSH1-X12D000XZ0	WASHER, M12, STEEL, ZINC PLATED	1	
86	WSH1-X3130002Z0	WASHER, 5/16, GR2, ZN	2	
87	WSH1-X508000XB0	WASHER, M5, STEEL, BLACK OXIDE	2	
88	WSH1-X508000XZ0	WASHER, M5, STEEL, ZINC PLATED	2	
89	WSH3-X08B000XZ0	WASHER, FENDER, M8, STEEL, ZINC PLATED	4	

WHEN ORDERING PARTS, SPECIFY MODEL NUMBER, SERIAL NUMBER AND DESCRIPTION OF PARTS REQUIRED

DOOR ASSEMBLY

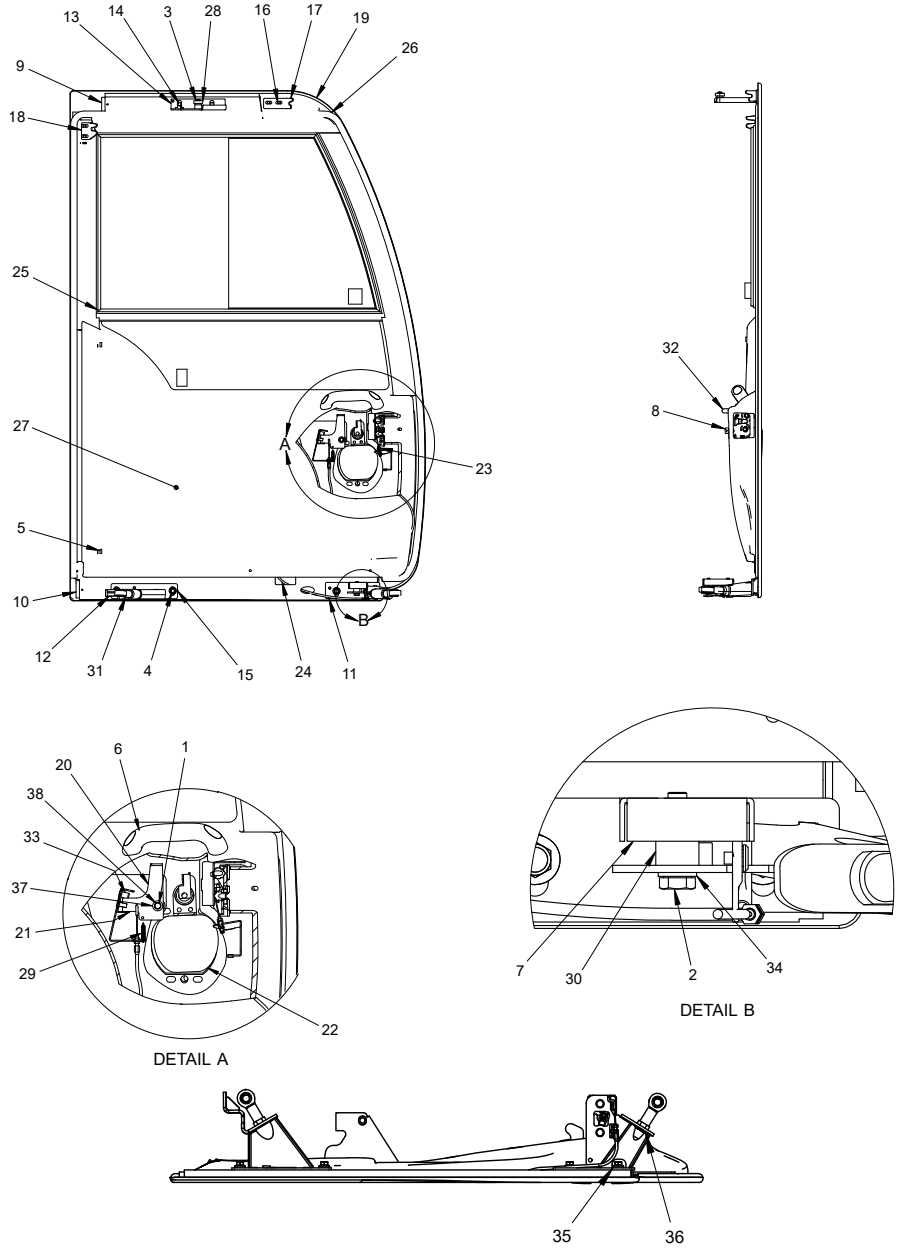

WHEN ORDERING PARTS, SPECIFY MODEL NUMBER, SERIAL NUMBER AND DESCRIPTION OF PARTS REQUIRED

DOOR ASSEMBLY

ITEM	PART NUMBER	DESCRIPTION	QUANTITY	NOTES
	T111882	**DOOR ASSEMBLY**		
1	HHCS-M06A020PZ0	SCR, HHCS, M6-1 X 20, ZINC, CLASS 8.8	1	
2	HHCS-M08B035PZ0	SCR, HHCS, M8-1.25 X 35, ZINC, CLASS 8.8	2	
3	RET3-X07A000XP0	RING, E-CLIP M7, BLK PHOS	1	
4	S13-10CM020-28	HEX FLANGE SCREW, AM, M10 X1.5 X20	4	
5	T112317	NUT, CLIP-ON, M5-0.8	2	
6	T126005	HANDLE DOOR	1	
7	T126006	LATCH, LOWER DOOR	1	
8	T126007	LATCH, MAIN DOOR	1	
9	T126008	STOP, UPPER RUBBER	1	
10	T126009	STOP, LOWER RUBBER	1	
11	T126010	BRACKET, LOWER FRONT ROLLER	1	
12	T126011	BRACKET, LOWER REAR ROLLER	1	
13	T126012	BRACKET, UPPER ROLLER	1	
14	T126013	BLOCK, THREADED, M10 X 1.5	2	
15	T126014	BLOCK, THREADED, M10 X 1.5	1	
16	T126015	BLOCK, THREADED, M8 - 1.25	2	
17	T126016	BRACKET, UPPER LATCH	1	
18	T126017	BRACKET, REAR LATCH	1	
19	T126018	DOOR WELDMENT	1	
20	T126019	BRACKET, DOOR RELEASE	1	
21	T126020	BRACKET, RELEASE STOP	1	
22	T126021	HANDLE, EXTERIOR DOOR	1	
23	T126022	CABLE, DOOR OPEN	1	
24	T126023	CABLE, DOOR RELEASE	1	
25	T126024	GLASS, DOOR	1	
26	T126025	SEAL DOOR	1	
27	T126026	PLASTIC, INTERIOR DOOR	1	
28	T126057	ROLLER	1	
29	T126058	SPRING RELEASE	1	
30	T126059	SPACER, M18ODX10	2	
31	T126060	ROD END, BALL JOINT, M14 X 2-D14	2	
32	T126153	HANDLE, DOOR RELEASE	1	
33	V01-06AM017-Y2	RVT, FLGHD M6 X 1.0X 17.27-GRIP 4.20-6.60	2	
34	WSH1-X08B000PZ0	WASHER, M8, STEEL, ZINC	2	
35	WSH1-X10C000XZ0	WASHER, M10, STEEL, ZINC PLATED	4	
36	WSH1-X14E000XZ0	WASHER, M14, STEEL, ZINC	1	
37	WSH3-X06A000XZ0	WASHER FENDER, M6, STEEL, ZINC PLATED	1	
38	WSH4-X06A000XZ0	LOCK WASHER, M6, STEEL, ZINC	1	

WHEN ORDERING PARTS, SPECIFY MODEL NUMBER, SERIAL NUMBER AND DESCRIPTION OF PARTS REQUIRED

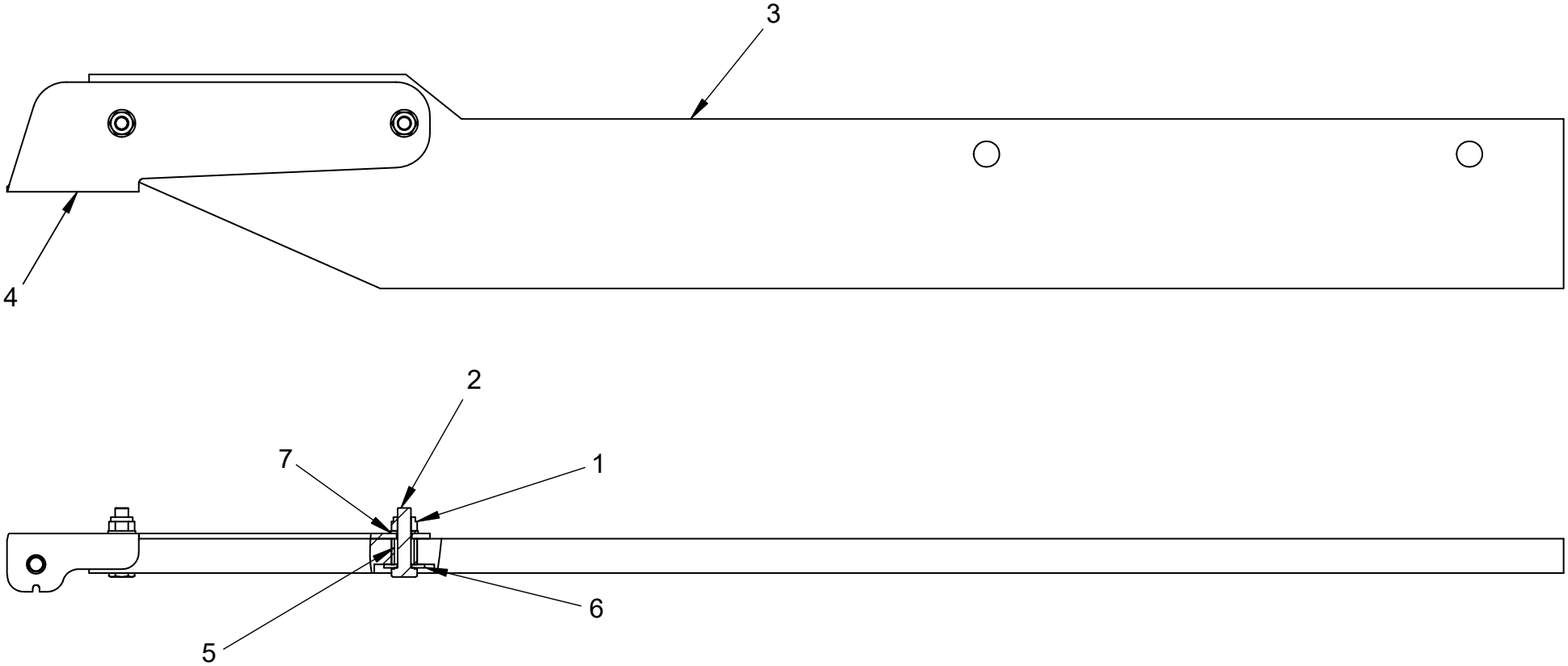

WHEN ORDERING PARTS, SPECIFY MODEL NUMBER, SERIAL NUMBER AND DESCRIPTION OF PARTS REQUIRED

UPPER DOOR GUIDE ASSEMBLY

ITEM	PART NUMBER	DESCRIPTION	QUANTITY	NOTES
	T122302	**UPPER DOOR GUIDE ASSEMBLY**		
1	NUT3-M08B000PZ0	NYLON HEX NUT, M8-1.25, STL Z C8	2	
2	HHCS-M08B035PZ0	SCR, HHCS M8-1.25 X 35 FT, ST SQC C8.8	2	
3	T121365	GUIDE, UPPER DOOR	1	
4	T121366	BRACKET, UPPER GUIDE	1	
5	T121985	SPACER, M15 OD X 15	2	
6	WSH3-X08B000XZ0	WASHER, FENDER, M8, STL	2	
7	WSH1-X08B000PZ0	WSH, FLAT M8 DIN125, ST SQC	2	

WHEN ORDERING PARTS, SPECIFY MODEL NUMBER, SERIAL NUMBER AND DESCRIPTION OF PARTS REQUIRED

FRONT WIPER ASSEMBLY

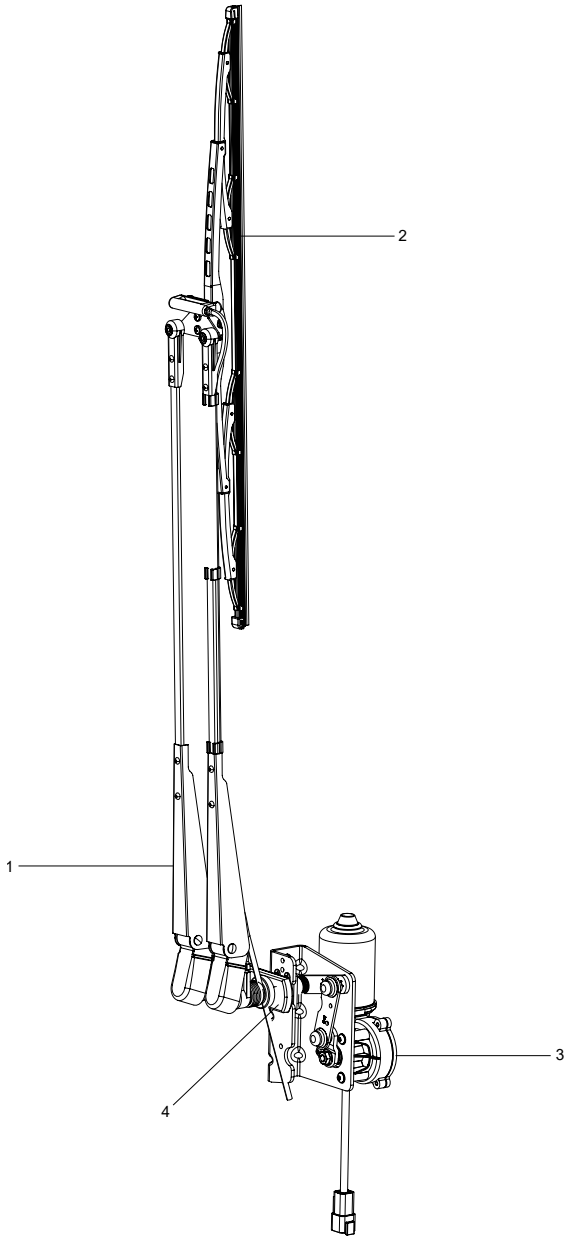

WHEN ORDERING PARTS, SPECIFY MODEL NUMBER, SERIAL NUMBER AND DESCRIPTION OF PARTS REQUIRED

FRONT WIPER ASSEMBLY

ITEM	PART NUMBER	DESCRIPTION	QUANTITY	NOTES
	T134724	**FRONT WIPER ASSEMBLY**		
1	T135110	ARM, FRONT WIPER	1	
2	T135109	BLADE, FRONT WIPER	1	
3	T134874	MOTOR, FRONT WIPER	1	
4	T135247	ADAPTER, SLAVE PIVOT	1	

WHEN ORDERING PARTS, SPECIFY MODEL NUMBER, SERIAL NUMBER AND DESCRIPTION OF PARTS REQUIRED

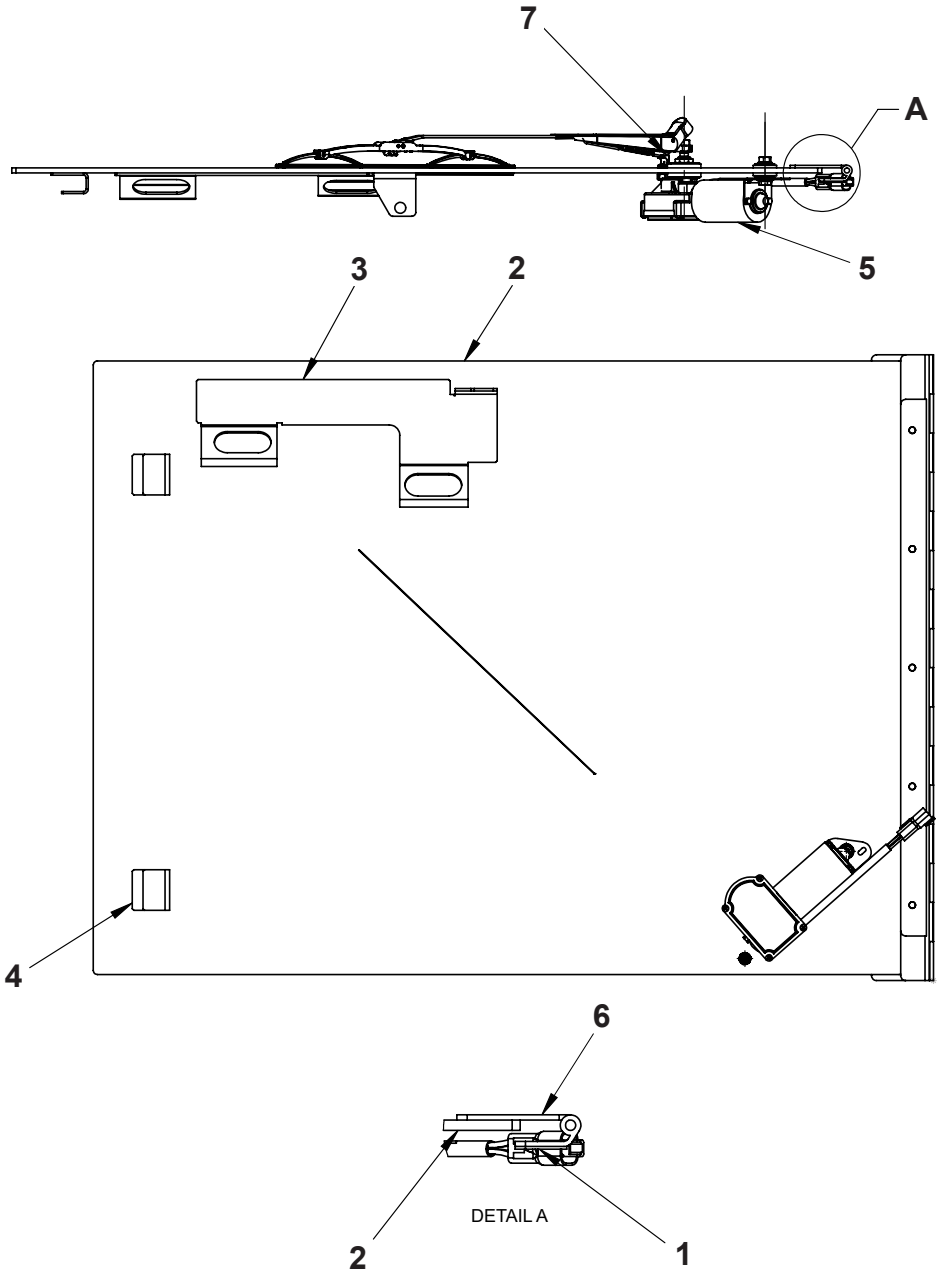

WHEN ORDERING PARTS, SPECIFY MODEL NUMBER, SERIAL NUMBER AND DESCRIPTION OF PARTS REQUIRED

ROOF HATCH ASSEMBLY

ITEM	PART NUMBER	DESCRIPTION	QUANTITY	NOTES
	T135765	**ROOF HATCH ASSEMBLY**		
1	T111839	GASKET, ROOF HATCH	1	
2	T133365	GLASS, ROOF	1	
3	T134729	PLATE, LEFT HANDLE	1	
4	T134841	BRACKET, WINDSHIELD LATCH	2	
5	**T134844**	WIPER, ROOF	1	SEE PAGE 35
6	T135202	HINGE, ROOF	1	
7	T135314	SPRAYER, WIPER MIST	1	

WHEN ORDERING PARTS, SPECIFY MODEL NUMBER, SERIAL NUMBER AND DESCRIPTION OF PARTS REQUIRED

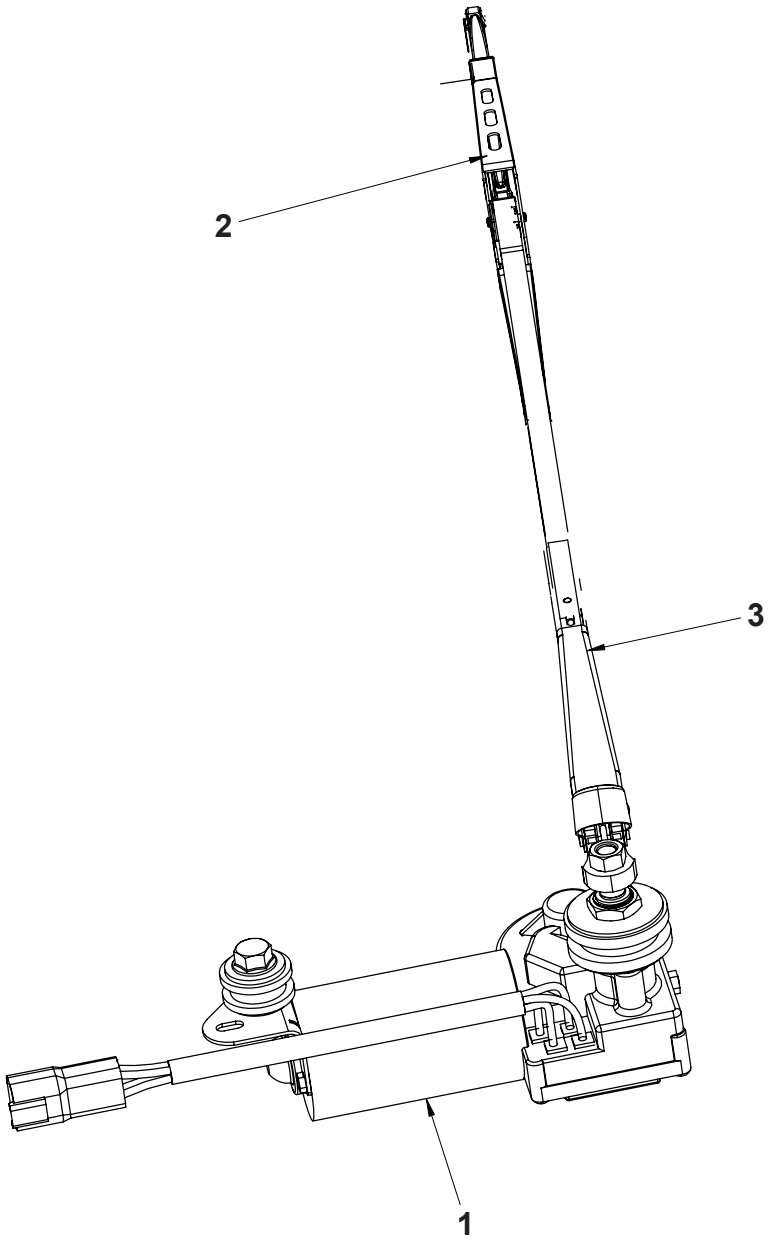

WHEN ORDERING PARTS, SPECIFY MODEL NUMBER, SERIAL NUMBER AND DESCRIPTION OF PARTS REQUIRED

WIPER ROOF

ITEM	PART NUMBER	DESCRIPTION	QUANTITY	NOTES
	T134844	**WIPER, ROOF**		
1	T134843	MOTOR, ROOF WIPER	1	
2	T135200	BLADE, ROOF WIPER	1	
3	T135201	ARM, ROOF WIPER	1	

WHEN ORDERING PARTS, SPECIFY MODEL NUMBER, SERIAL NUMBER AND DESCRIPTION OF PARTS REQUIRED

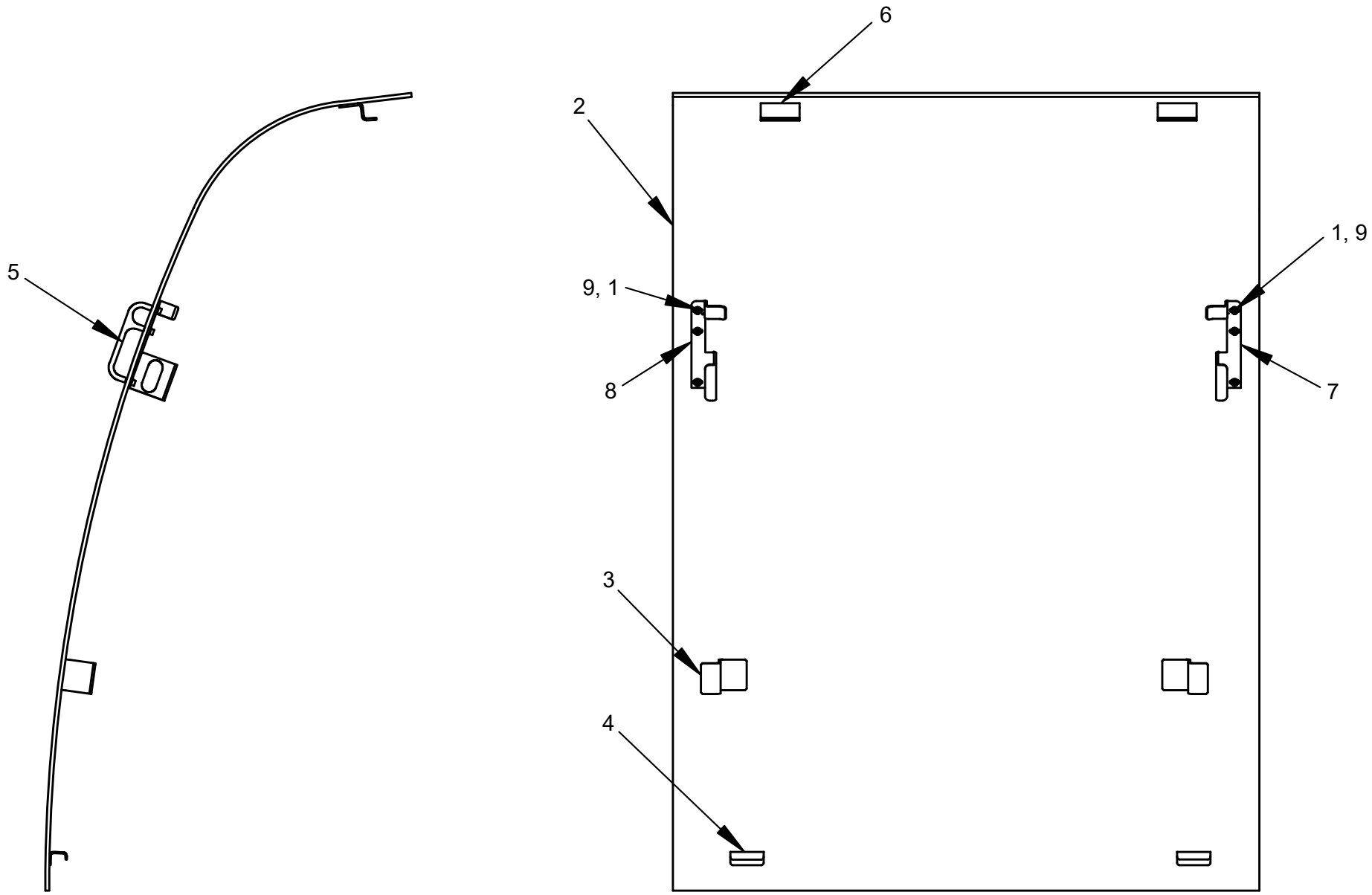

WHEN ORDERING PARTS, SPECIFY MODEL NUMBER, SERIAL NUMBER AND DESCRIPTION OF PARTS REQUIRED

FRONT WINDSHIELD

ITEM	PART NUMBER	DESCRIPTION	QUANTITY	NOTES
	T138734	**WINDSHIELD, FRONT**		
1	SHCS-M407012AZ0	SOCKET HEAD CAP SCREW, M4 X0.7 X 12, ZINC	6	
2	T133555	GLASS, FRONT	1	
3	T134730	BRACKET, WINDSHIELD LATCH	2	
4	T134731	BRACKET, GLASS HOLDING	2	
5	T134797	HANDLE	2	
6	T134840	BRACKET, WINDSHIELD LATCH	2	
7	T140289	PLATE, RIGHT WINDSHIELD LATCH	1	
8	T140290	PLATE, LEFT WINDSHIELD LATCH	1	
9	WSH1-X407000XZ0	WAHSER, M4-0.7, STL	6	

WHEN ORDERING PARTS, SPECIFY MODEL NUMBER, SERIAL NUMBER AND DESCRIPTION OF PARTS REQUIRED

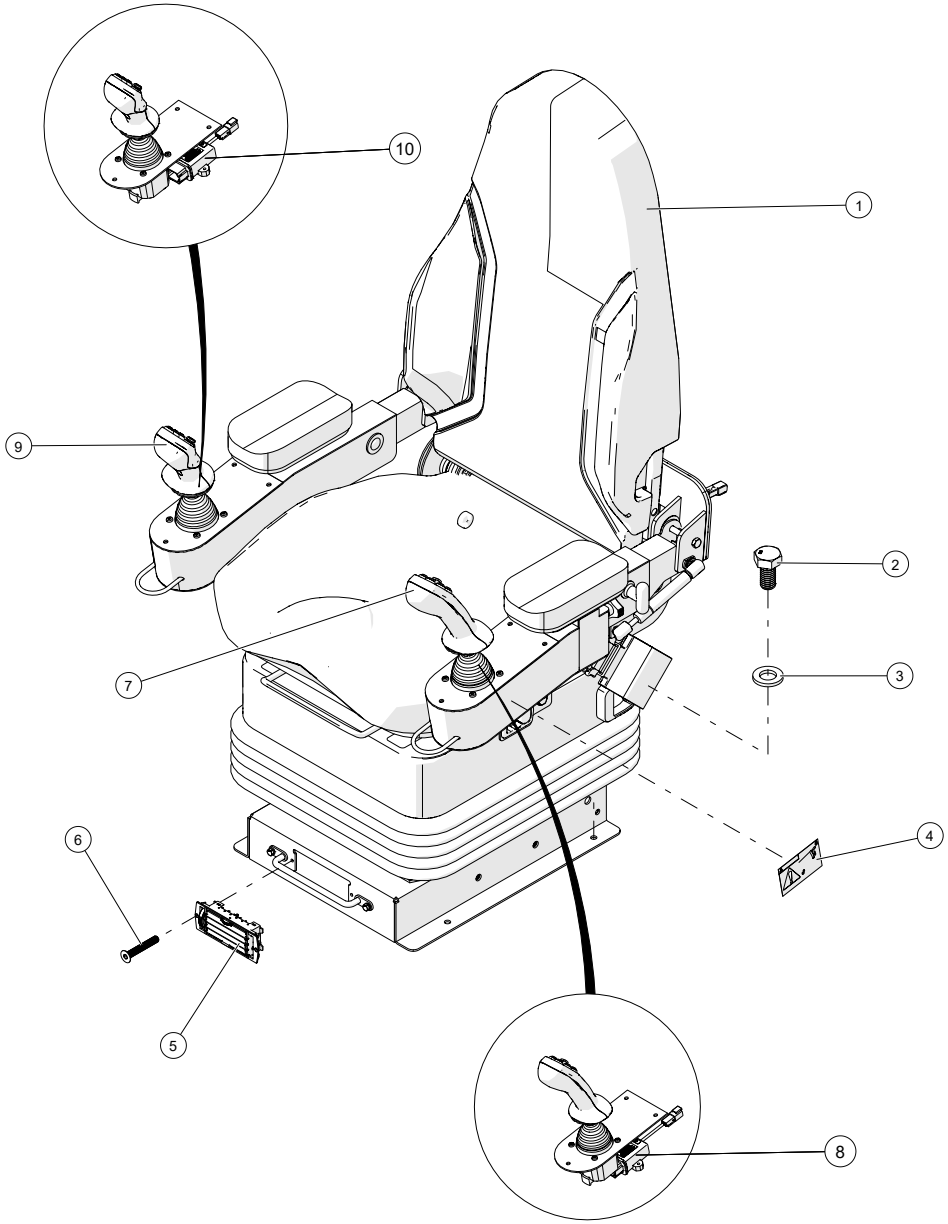

WHEN ORDERING PARTS, SPECIFY MODEL NUMBER, SERIAL NUMBER AND DESCRIPTION OF PARTS REQUIRED

SEAT ASSEMBLY

ITEM	PART NUMBER	DESCRIPTION	QUANTITY	NOTES
	1025700	**SEAT ASSEMBLY**		
1	**T122274**	SEAT, OPERATOR	1	SEE PAGE 41
2	HHCS-M08B016PZ0	SCR, HHCS M8-1.25 X 16	4	
3	WSH1-X08B000XZ0	WASHER, FLAT M8 DIN125	4	
4	T144774	DECAL - SEAT ARM	1	
5	T111909	VENT, LOUVERED RECTANGULAR	1	
6	SH02-M305020QZ0	SCR, SHFHS M3-0.5 X 20	2	
7	1027052	GS LH JOYSTICK	1	
8	1032556	LEFT AXIOMATIC JOYSTICK THUMPER	1	
9	1027053	GS RH JOYSTICK	1	
10	1032776	RIGHT AXIOMATIC JOYSTICK THUMPER	1	

WHEN ORDERING PARTS, SPECIFY MODEL NUMBER, SERIAL NUMBER AND DESCRIPTION OF PARTS REQUIRED

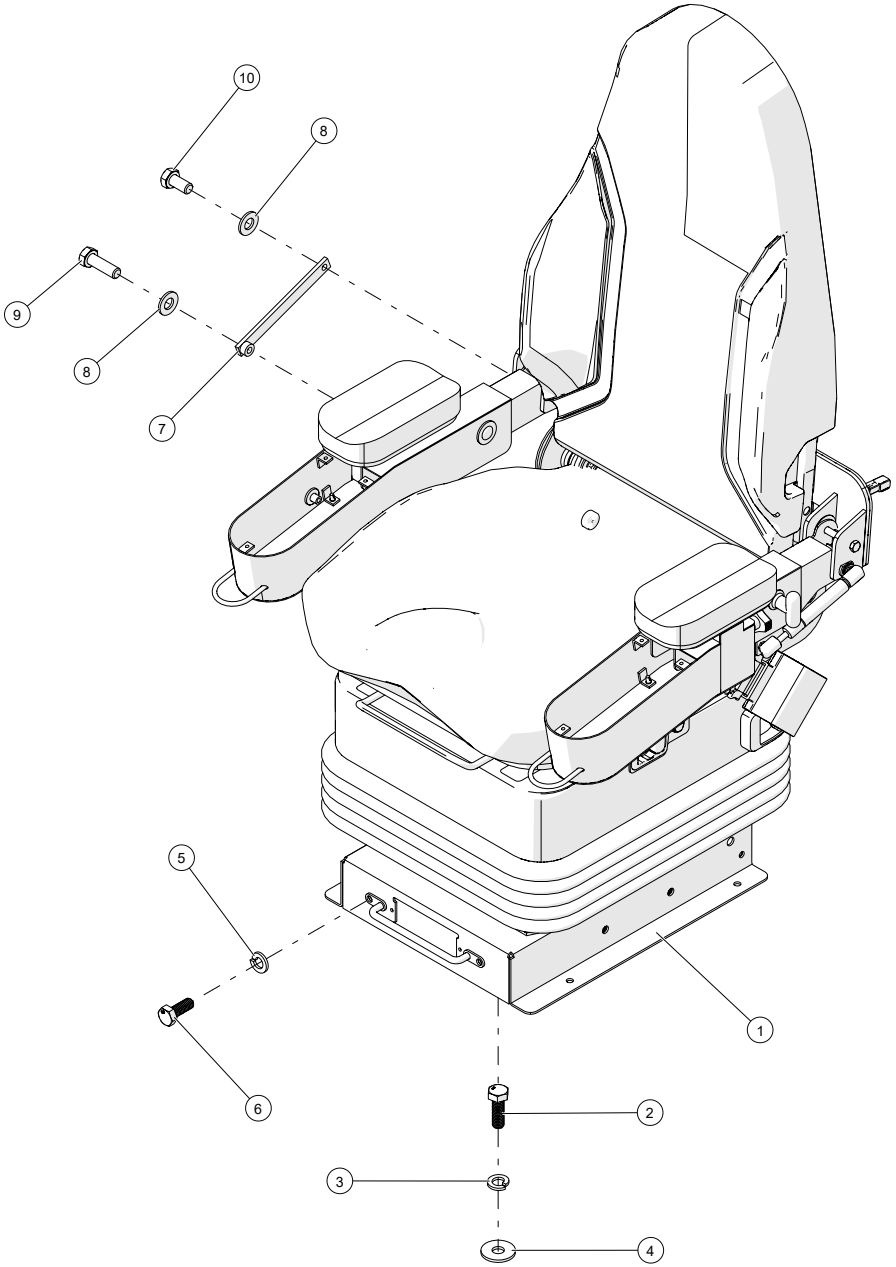

WHEN ORDERING PARTS, SPECIFY MODEL NUMBER, SERIAL NUMBER AND DESCRIPTION OF PARTS REQUIRED

OPERATOR SEAT

ITEM	PART NUMBER	DESCRIPTION	QUANTITY	NOTES
	T122274	**SEAT, OPERATOR**		
1	T121531	RISER, SEAT	1	
2	HHCS-M08B025PZ0	SCR, HHCS M8-1.25 X 25 FT, ST Z 8.8	4	
3	WSH4-X08B000XZ0	WSH, LOCK, SPLT M8 D127B, ST Z	4	
4	WSH3-X08B000XZ0	WASHER, FENDER, M8, STEEL, ZINC PLATED	1	
5	WSH4-X06A000XZ0	WSH, LOCK, SPLT M6 D127B, ST Z	1	
6	HHCS-M06A016PZ0	HEX HEAD CAP SCREW, M6-1X16, C8.8	2	
7	T128560	BRACE, ARMREST	1	
8	WSH1-X3130002Z0	WASHER, 5/16, GR2, ZN	1	
9	HHCS-C313A005Z1	HEX HEAD CAP SCREW, 5/16-18 X 1 LEN, GR5, ZN, FULL THREAD	1	
10	HHCS-C3136255Z0	HEX HEAD CAP SCREW, 5/16-18 X 5/8 LEN, GR5, ZN	1	

WHEN ORDERING PARTS, SPECIFY MODEL NUMBER, SERIAL NUMBER AND DESCRIPTION OF PARTS REQUIRED

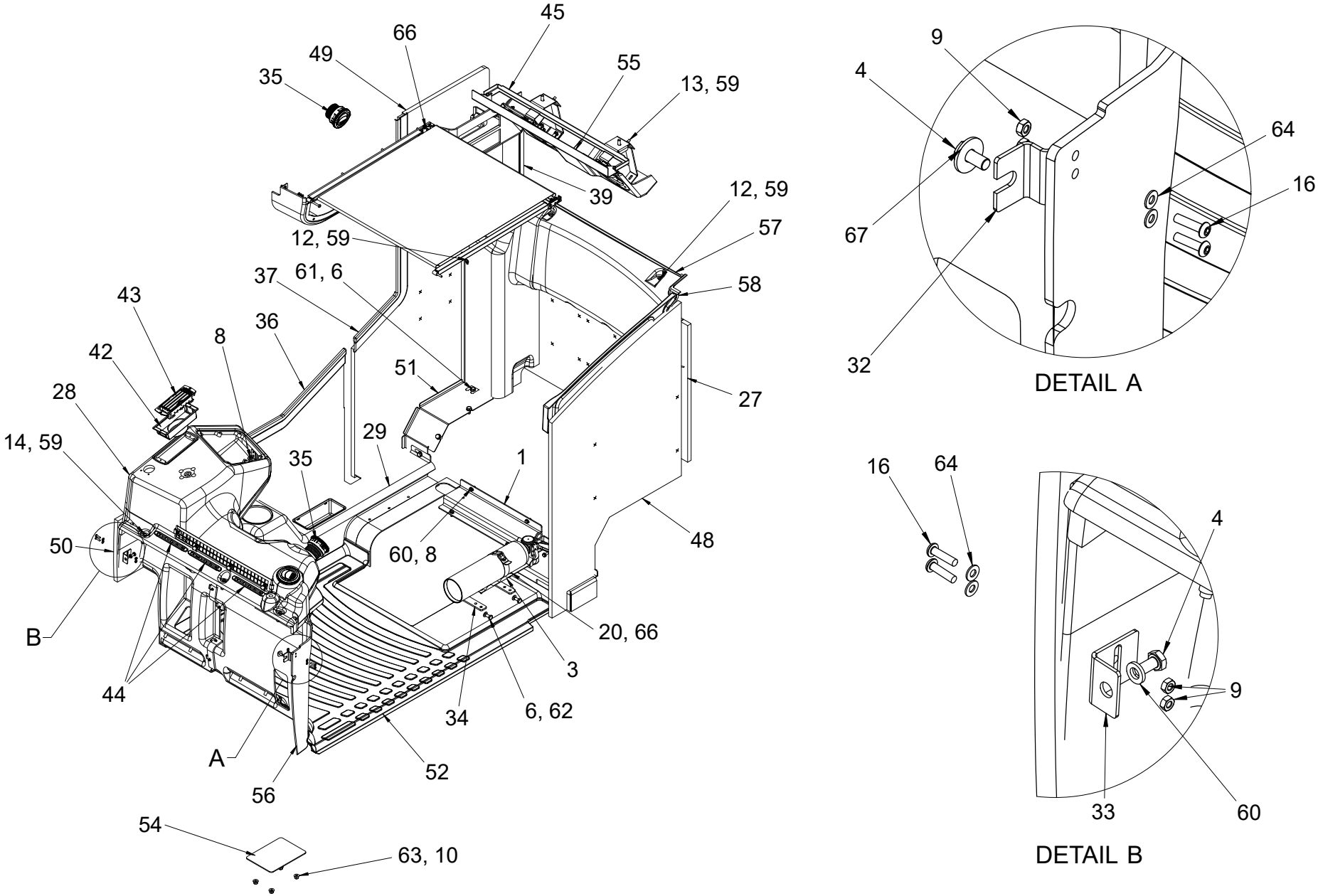

WHEN ORDERING PARTS, SPECIFY MODEL NUMBER, SERIAL NUMBER AND DESCRIPTION OF PARTS REQUIRED

ITEM	PART NUMBER	DESCRIPTION	QUANTITY	NOTES
	1035053	**CAB INTERIOR INSTALLATION**		
1	1035052	PLATE, COVER	1	
2	1035054	PLATE, SPACER	1	
3	1222-217	FIRE EXSTINGUISHER	1	
4	HHCS-M06A012PZ0	HEX HEAD CAP SCREW, M6-1 X 12, C8.8	2	
5	HHCS-M06A016PZ0	HEX HEAD CAP SCREW, M6-1 X 16, C8.8	8	
6	HHCS-M08B016PZ0	HEX HEAD CAPS SCREW, M8-1.25 X 16, C8.8	10	
7	HHCS-M08B020PZ0	HEX HEAD CAP SCREW, M8-1.25 X 20, C8.8	2	
8	NUT1-M06A000PZ0	HEX NUT, M6 X 1, STEEL, ZINC PLATED	1	
9	NUT1-M407000PB0	HEX NUT, M4-0.7, STL, BLK OX	4	
10	NUT3-C2500005Z0	NYLON LOCK NUT, 1/4-20, GR5, ZN	4	
11	NUT3-M508000PZ0	NYLON INSERT NUT, M5-0.8, C8.8 Z	2	
12	SH03-M06A020PB0	SHCS BUTTON HEAD, M6-1 X 20, C8.8 BLK OX	7	
13	SH03-M06A020QB0	SHCS BUTTON HEAD, M6-1 X 20, C10.9 BLK OX	6	
14	SH03-M06A030PB0	SHCS BUTTON HEAD, M6-1 X 30, BLK OX, C8.8	4	
15	SH03-M08B020PB0	SHCS BUTTON HEAD, M8-1.25 X 20, BLX OX, C8.8	4	
16	SH03-M407016PB0	SHCS BUTTON HEAD, M4-0.7 X 16, BLK OX C8.8	4	
17	SH03-M407016PZ0	SHCS BUTTON HEAD, M4-0.7 X 16, C8.8, ZINC	1	
18	SH03-M407020QB0	SHCS BUTTON HEAD, M4-0.7 X 20, C10.9, BLK OX	3	
19	SH03-M508012PZ0	SHCS BUTTON HEAD, M5-0.8 X 12, C8.8	2	
20	SH03-M508016PZ0	SHCS BUTTON HEAD, M5-0.8 X 16, C8.8	4	
21	SH03-M508020PZ0	SHCS BUTTON HEAD, M5-0.8 X 20, C8.8	3	
22	SH03-M508025PZ0	SHCS BUTTON HEAD, M5-0.8 X 25, C8.8 ZINC	2	
23	SH03-M508030PZ0	SHCS BUTTON HEAD, M5-0.8 X 30, C8.8	2	
24	T105183	PLUG, RIGID PLASTIC	1	
25	T106053	CORNER, RIGHT REAR	1	
26	T106775	BRACKET, PLASTIC MOUNTING	1	
27	T109364	INSULATION, REAR	1	
28	**T109402**	FRONT UPPER DASH SUB ASSEMBLY	1	SEE PAGE 47
29	T111775	CONSOLE, LOWER RIGHT	1	
30	T111781	BRACKET, MOUNTING	1	
31	T111782	BRACKET, SPEAKER MOUNTING	2	
32	T111791	BRACKET, DASH	1	
33	T111792	BRACKET, DASH	1	
34	T111864	BRACKET FIRE EXTINGUISHER	2	
35	T111895	VENT, CIRCULAR LOUVERED	3	

WHEN ORDERING PARTS, SPECIFY MODEL NUMBER, SERIAL NUMBER AND DESCRIPTION OF PARTS REQUIRED

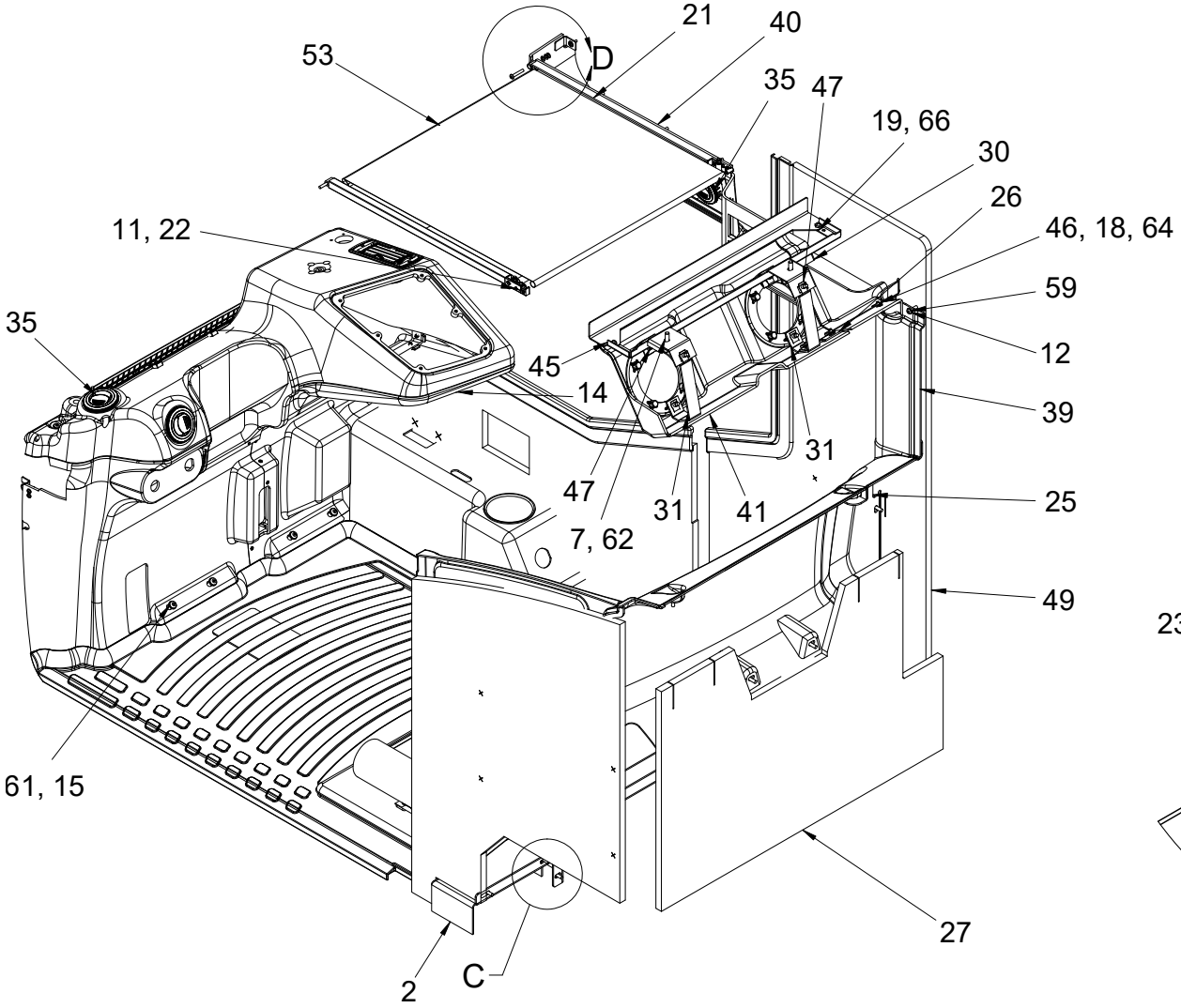

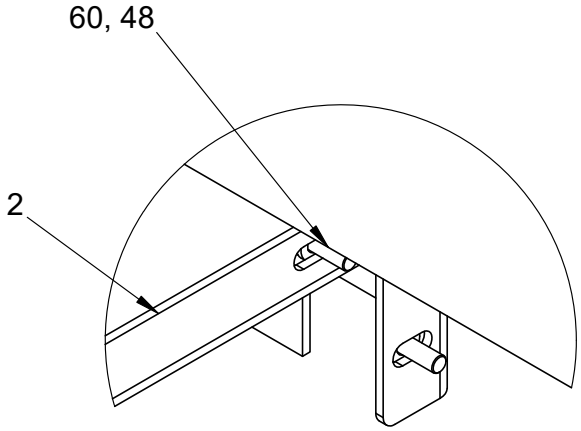

DETAIL C

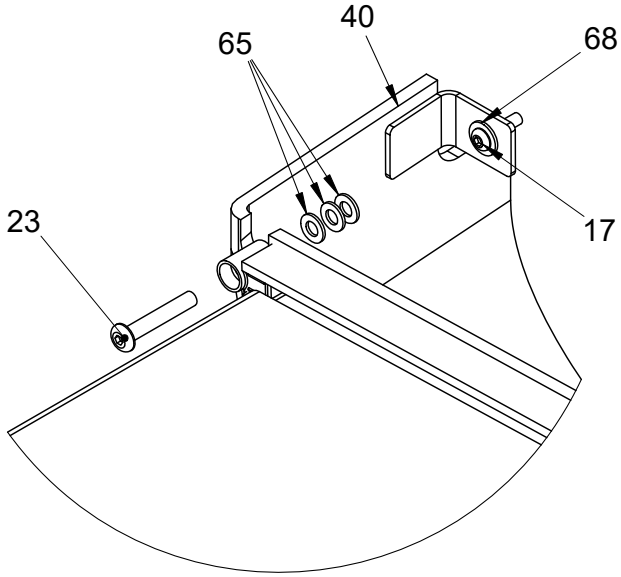

DETAIL D

WHEN ORDERING PARTS, SPECIFY MODEL NUMBER, SERIAL NUMBER AND DESCRIPTION OF PARTS REQUIRED

ITEM	PART NUMBER	DESCRIPTION	QUANTITY	NOTES
	1035053	**CAB INTERIOR INSTALLATION**		
36	T111899	TRIM, RIGHT FRONT WINDOW	1	
37	T111900	TRIM, RIGHT REAR WINDOW	1	
38*	T111902	VELCRO	1	
39	T111904	CORNER, RIGHT REAR	1	
40	T111905	CONSOLE, RIGHT UPPER	1	
41	T111906	COVER, UPPER REAR	1	
42	T111908	ADAPTER, HOSE RECTANGULAR VENT	1	
43	T111909	VENT, LOUVERED RECTANGULAR	1	
44	T111910	VENT, DEFROST	3	
45	T111939	BRACKET, SPEAKER	1	
46	T112316	NUT, CLIP ON M4-0.7	3	
47	T112319	NUT, CLIP ON M6-1	9	
48	T120289	INSULATION, LEFT SIDE	1	
49	T120290	INSULATION, RIGHT REAR	1	
50	T120291	INSULATION, RIGHT FRONT	1	
51	T123712	COVER, HARNESS	1	
52	T130275	FLOOR MAT	1	
53	T135211	SUN SHADE	1	
54	T136887	PLATE WELDMENT	1	
55	T142535	BRACKET, WELDMENT	1	
56	T150362	DASH, LOWER	1	
57	T150363	COVER, LOWER REAR	1	
58	T150364	TRIM, LEFT REAR	1	
59	WSH1-X06A000XB0	WASHER, M6, STL BLK OX	13	
60	WSH1-X06A000XZ0	WASHER, M6, STEEL, ZINC PLATED	9	
61	WSH1-X08B000XB0	WASHER, M8, STL BLK OX	8	
62	WSH1-X08B000XZ0	WASHER, M8, STEEL, ZINC PLATED	8	
63	WSH1-X2500002Z0	WASHER, 1/4, GR2, ZN	4	
64	WSH1-X407000XB0	WASHER, M4, STL BLK OX	7	
65	WSH1-X508000XB0	WASHER, M5, STEEL, BLACK OXIDE	3	
66	WSH1-X508000XZ0	WASHER, M5, STEEL, ZINC PLATED	8	
67	WSH3-X06A000XZ0	WASHER FENDER, M6, STEEL, ZINC PLATED	1	
68	WSH3-X407000XZ0	FENDER WASHER, M4, STEEL, ZINC PLATED	1	

NOTE: * NOT SHOWN IN THE ILLUSTRATION

WHEN ORDERING PARTS, SPECIFY MODEL NUMBER, SERIAL NUMBER AND DESCRIPTION OF PARTS REQUIRED

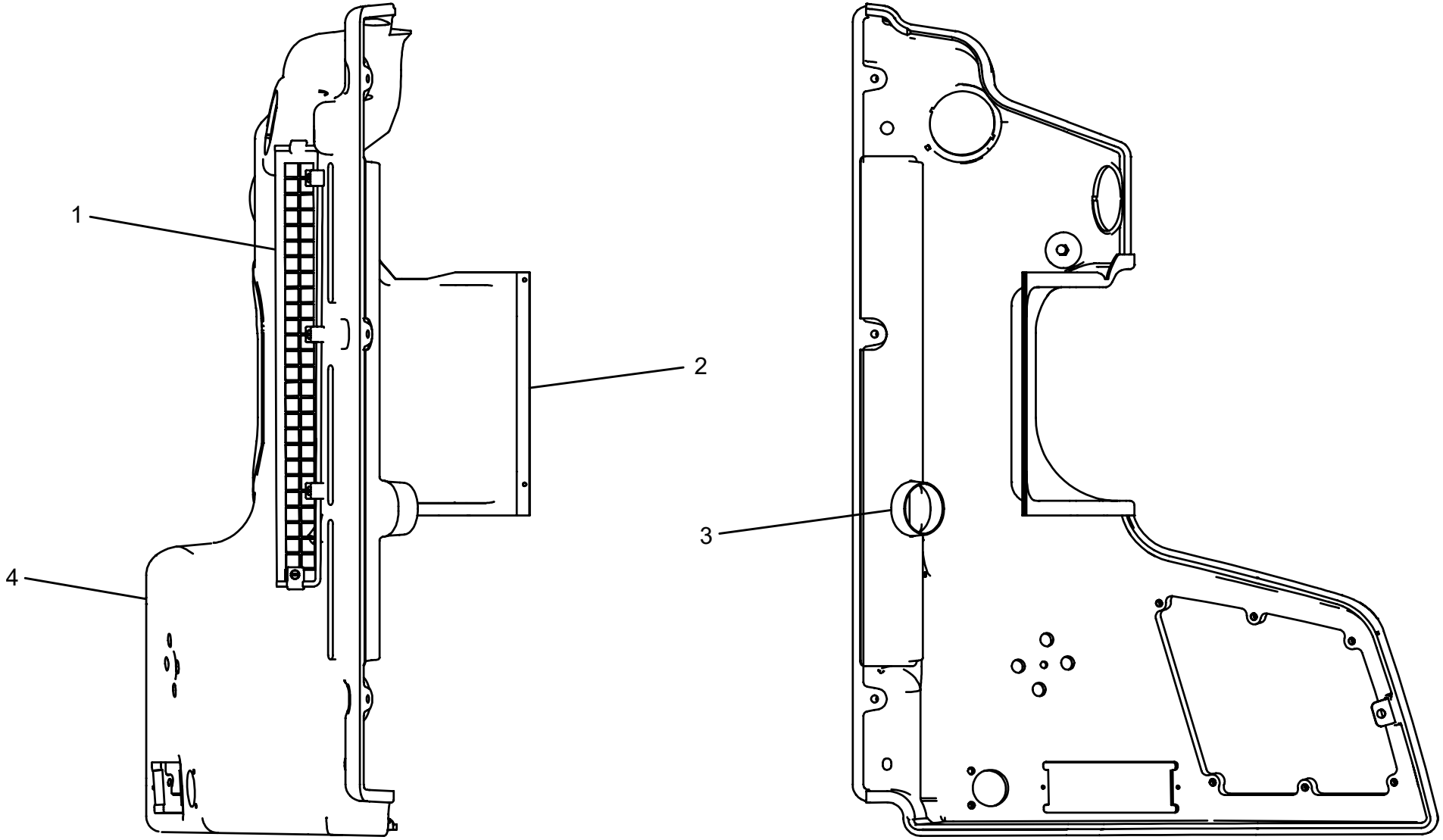

WHEN ORDERING PARTS, SPECIFY MODEL NUMBER, SERIAL NUMBER AND DESCRIPTION OF PARTS REQUIRED

FRONT UPPER DASH ASSEMBLY

ITEM	PART NUMBER	DESCRIPTION	QUANTITY	NOTES
	T109402	**FRONT UPPER DASH SUB ASSEMBLY**		
1	T111863	NET, DASH	1	
2	T111879	COVER, DASH	1	
3	T126975	ADAPTER, DEFROST	1	
4	T150391	DASH, FRONT UPPER	1	

WHEN ORDERING PARTS, SPECIFY MODEL NUMBER, SERIAL NUMBER AND DESCRIPTION OF PARTS REQUIRED

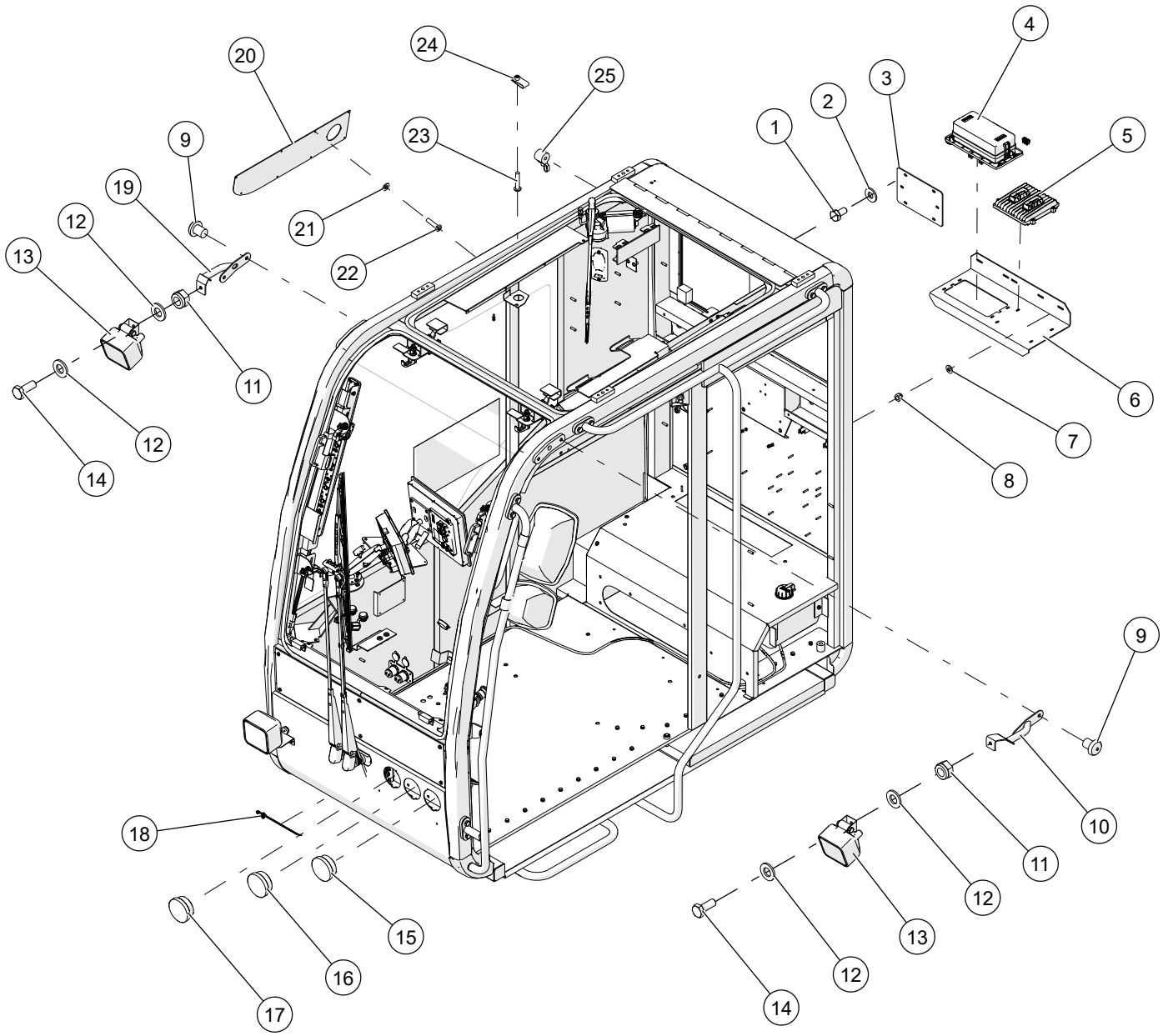

WHEN ORDERING PARTS, SPECIFY MODEL NUMBER, SERIAL NUMBER AND DESCRIPTION OF PARTS REQUIRED

CAB ELECTRICAL INSTALLATION

ITEM	PART NUMBER	DESCRIPTION	QUANTITY	NOTES
	1027132	**CAB ELECTRICAL INSTALLATION**		
1	HHCS-C2505005Z0	HEX HEAD CAP SCREW, 1/4-20 X 1/2 LEN, GR5, ZN	4	
2	WSH1-X2500008Z0	WASHER, 1/4, GR8, ZN	4	
3	1034091	PLATE, RECEIVER MOUNT	1	
4	1027055	EATON FUSE RELAY MRFRM	1	
5	1027050	iQAN MC43 I/O	3	
6	1034055	FUSE HOLDER BRACKET	1	
7	WSH1-X407000XZ0	WAHSER, M4-.7, STL	11	
8	NUT3-M407000PZ0	NYLON HEX NUT, M4-.7, STL Z C8.8	9	
9	SH03-M10C012QZ0	SHCS BUTTON HEAD, M10-1.5X12, C10.9 Z	4	
10	T143356	BRACKET,WORK LIGHT,LHS	1	
11	NUT3-M10C000PZ0	NYLYM HEX NUT, M10-1.5, STL	3	
12	WSH1-X10C000XZ0	WASHER, M10, STL	14	
13	T111783	LIGHT, FRONT	3	
14	HHCS-M10C020PZ0	HEX HEAD CAP SCREW, M10-1.5X20, C8.8	22	
15	T120451	LIGHT, RED MODE	1	
16	T120449	LIGHT, AMBER MODE	1	
17	T120450	LIGHT, GREEN MODE	1	
18	T108861	MOUNT,CABLE TIE,0.256-0.276	10	
19	T143357	BRACKET,WORK LIGHT,RHS	1	
20	1027134	PANEL, UPPER SWITCH	1	
21	WSH1-X407000XB0	WASHER, M4, STL BLK OX	14	
22	SH03-M407016PB0	SHCS BUTTON HEAD, M4-.7X16, BLK OX C8.8	16	
23	SH03-M407020PB0	SHCS BUTTON HEAD, M4-.7X20, BLK OX C8.8	5	
24	T112316	NUT, CLIP-ON, M4-0.7	1	
25	T106055	CABLE TIE,STUD MOUNT, 1/4-20	17	

WHEN ORDERING PARTS, SPECIFY MODEL NUMBER, SERIAL NUMBER AND DESCRIPTION OF PARTS REQUIRED

CAB ELECTRICAL INSTALLATION

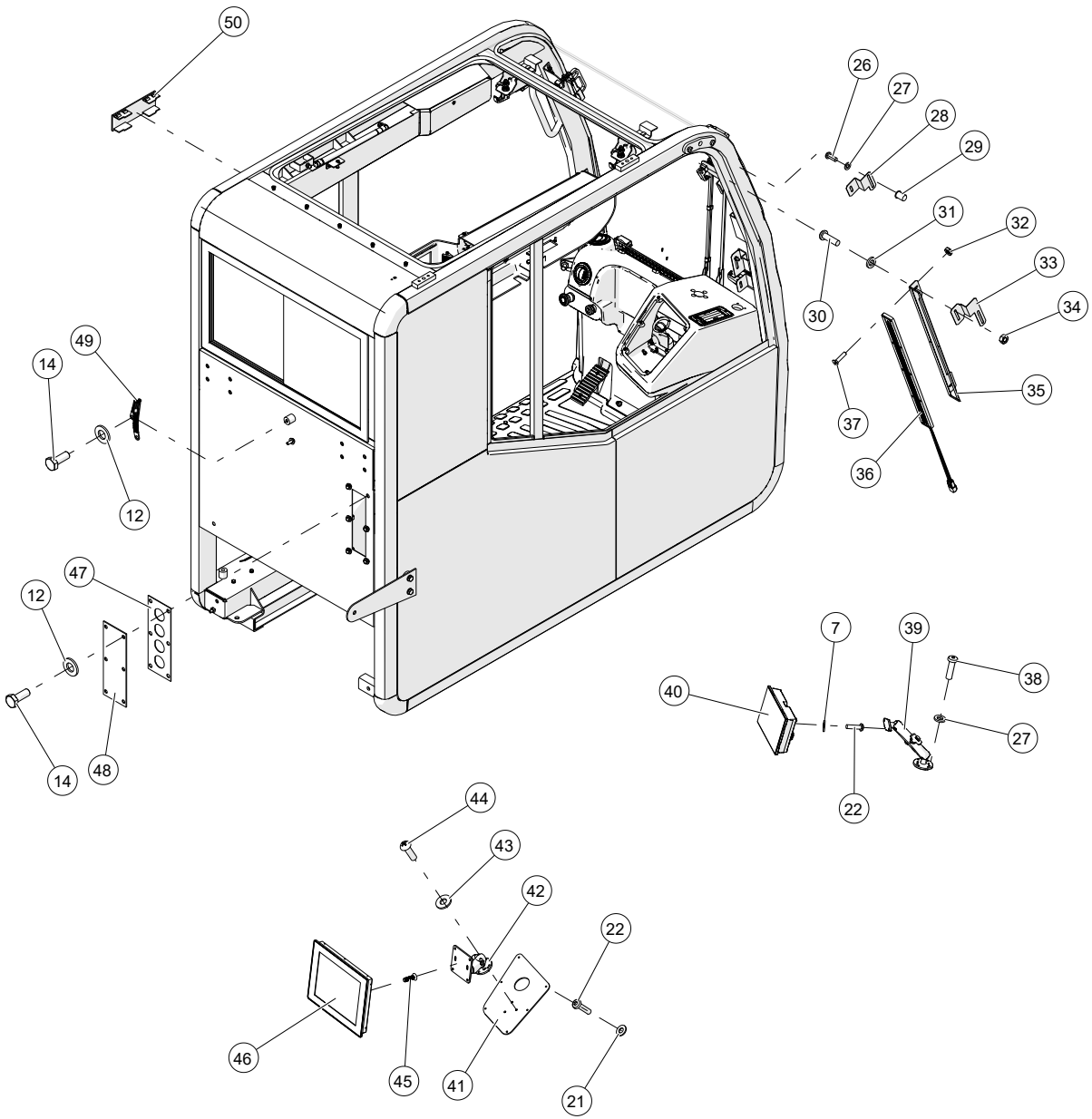

WHEN ORDERING PARTS, SPECIFY MODEL NUMBER, SERIAL NUMBER AND DESCRIPTION OF PARTS REQUIRED

ITEM	PART NUMBER	DESCRIPTION	QUANTITY	NOTES
	1027132	**CAB ELECTRICAL INSTALLATION**		
26	SH03-M06A016PZ0	SHCS BUTTON HEAD, M6-1X16, C8.8	4	
27	WSH1-X06A000XB0	WASHER, M6, STL BLK OX	8	
28	1034092	BRACKET, LIGHT BAR	2	
29	V01-06AM014-20	RVT, FLGHD M6x1.0x14.73, ST SQC	4	
30	SH03-M06A020ZR0	SHCS BUTTON HEAD, M6-1X20, STL	4	
31	WSH1-X06A000XZ0	WASHER, M6, STL	8	
32	NUT1-C1381252Z0	HEX HEAD NUT, #6-32, GR2, ZINC	6	
33	1035189	BRACKET LIGHT BAR	1	
34	NUT1-M06A000PZ0	HEX NUT, M6X1, STL	4	
35	1034090	BRACKET, LIGHT BAR	1	
36	1027054	GS LIGHT BAR	1	
37	SH02-C138625BB0	SHCS C'SUNK HEAD, 6-32 X 5/8 LEN, BO	6	
38	SH03-M06A022PB0	SHCS BUTTON HEAD, M6-1X22, BLK OX C8.8	4	
39	1035124	RAM SCREEN MOUNT	1	
40	1031331	GREER TS7 TOUCHSCREEN	1	
41	1027135	RIGHT CONSOLE PLATE	1	
42	1035138	RAM MOUNT C SIZE 3.5"	1	
43	WSH1-X1900002Z0	WASHER, #10, GR2, ZN	3	
44	MS09-C190625ZR0	MACHINE SCREW, 10-24 X 5/8 LEN, NF	3	
45	MS01-M407014PZ0	MACHINE SCREW, M4-0.7X14, C8.8 Z	4	
46	1027049	MASTER DISPLAY MODULE 10"	1	
47	T139511	GASKET, BULKHEAD PLATE	1	
48	1027133	COVER PLATE	1	
49	T111843	STRAP, GROUND	1	
50	T122107	COVER PLATE, DIN POCKET	1	

WHEN ORDERING PARTS, SPECIFY MODEL NUMBER, SERIAL NUMBER AND DESCRIPTION OF PARTS REQUIRED

CAB ELECTRICAL INSTALLATION

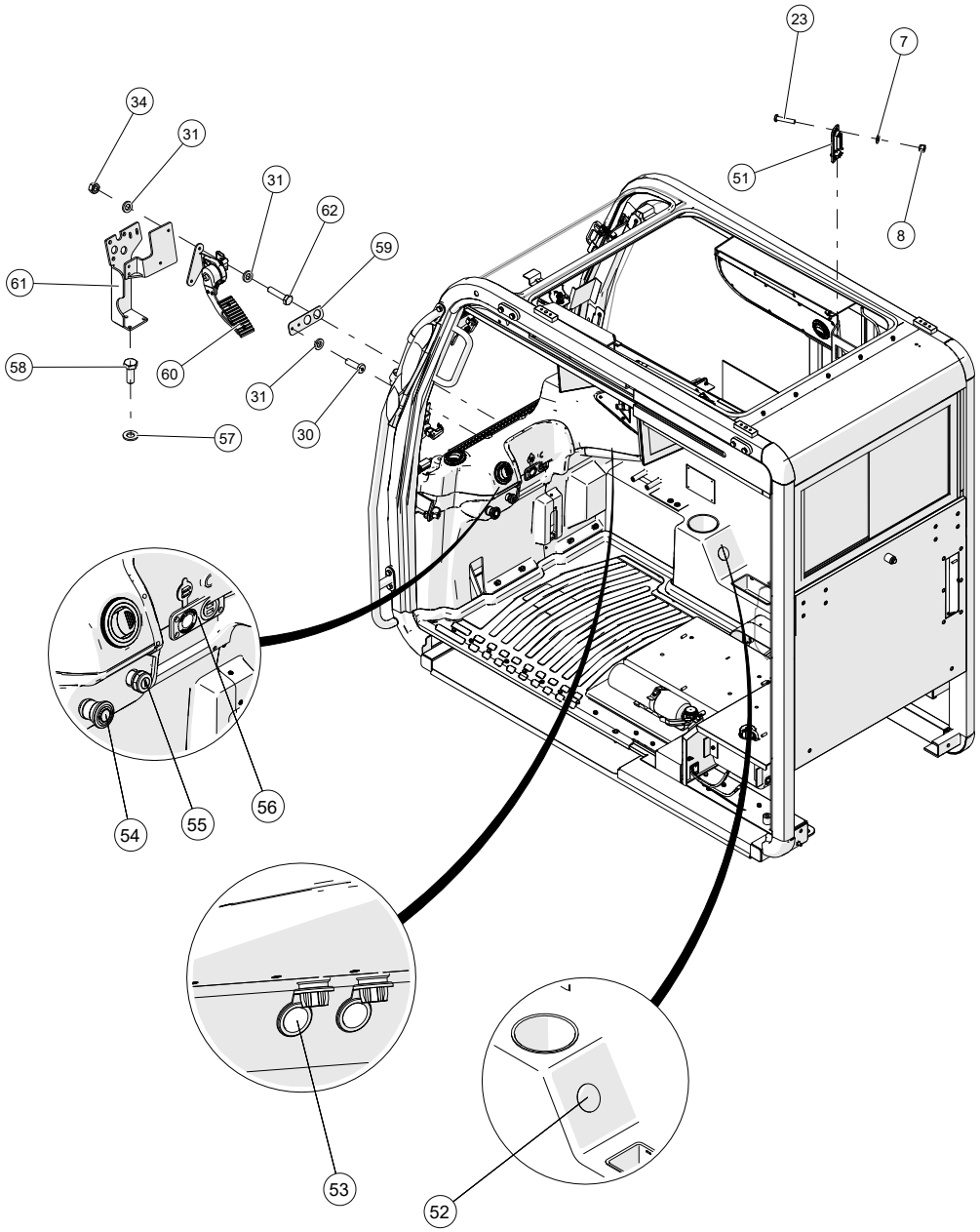

WHEN ORDERING PARTS, SPECIFY MODEL NUMBER, SERIAL NUMBER AND DESCRIPTION OF PARTS REQUIRED

CAB ELECTRICAL INSTALLATION

ITEM	PART NUMBER	DESCRIPTION	QUANTITY	NOTES
	1027132	**CAB ELECTRICAL INSTALLATION**		
51	T120436	LIGHT, DOME	2	
52	T137463	PLUG, 1.5 BLACK DOME	1	
53	T111819	PORT, 12V POWER	2	
54	T160366	SWITCH, E-STOP	1	
55	1223-858	SWITCH, IGNITION W/ KEY	1	
56	1031326	DUAL USB CHARGE PORT	1	
57	WSH1-X08B000XZ0	WASHER, M8, STEEL, ZINC PLATED	3	
58	HHCS-M08B020PZ0	HEX HEAD CAP SCREW, M8-1.25X20, C8.8	3	
59	T133333	BRACKET	1	
60	T122874	PEDAL, THROTTLE	2	
61	T122264	BRACKET, BRAKE/THROTTLE PEDAL	1	
62	HHCS-M06A025PZ0	HEX HEAD CAP SCREW, 6-1X25, C8.8	2	

WHEN ORDERING PARTS, SPECIFY MODEL NUMBER, SERIAL NUMBER AND DESCRIPTION OF PARTS REQUIRED

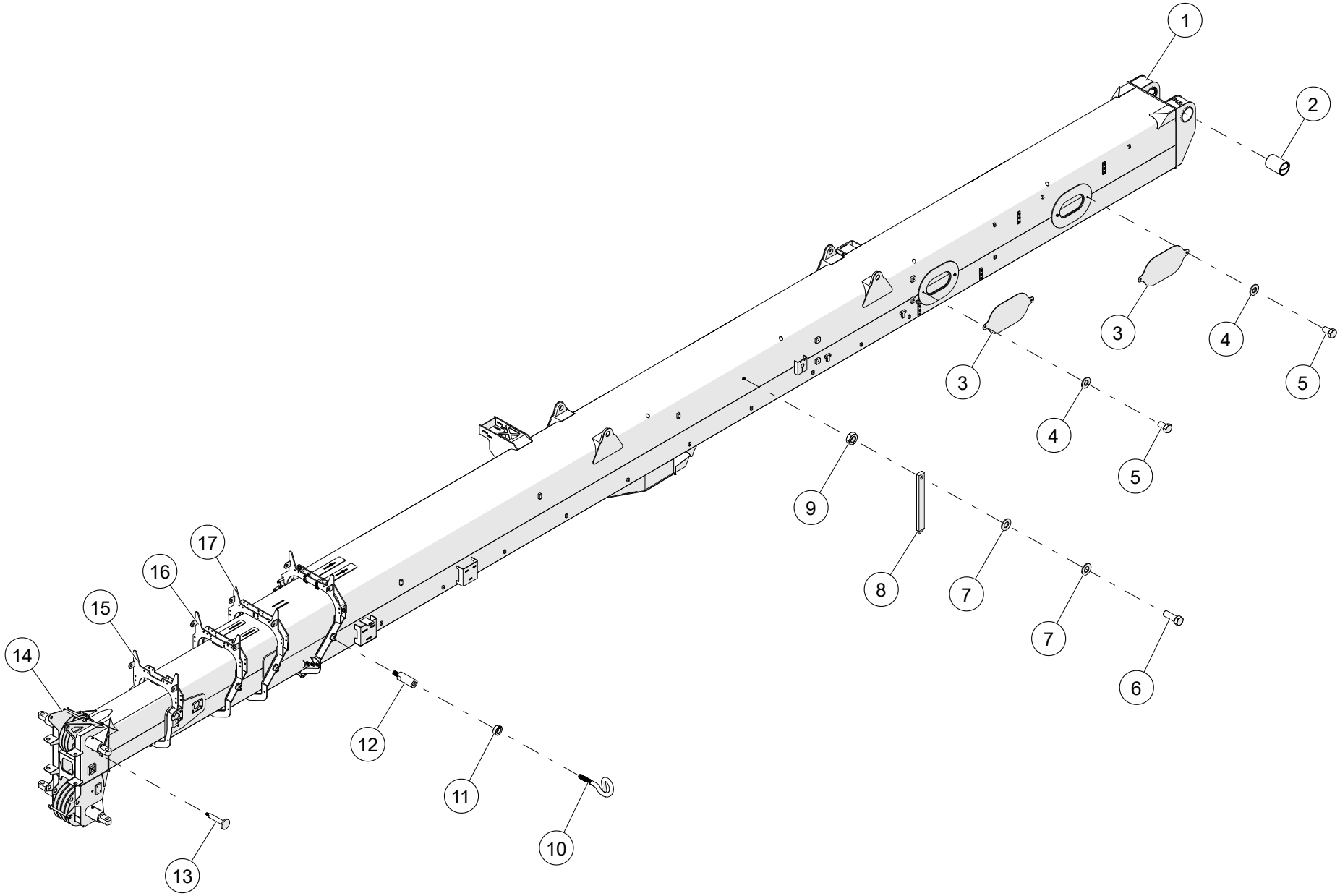

WHEN ORDERING PARTS, SPECIFY MODEL NUMBER, SERIAL NUMBER AND DESCRIPTION OF PARTS REQUIRED

BOOM ASSEMBLY

ITEM	PART NUMBER	DESCRIPTION	QUANTITY	NOTES
	1032204	**BOOM ASSEMBLY, 155FT, 50TON**		
1	1032205	WELDMENT, BASE SECTION	1	
2	1008463	BUSHING, PIVOT PIN	2	
3	1004751	PLATE, ACCESS HOLE COVER	4	
4	WSH2-X5000008Z0	SAE WASHER, 1/2, GR8, ZN	22	
5	HHCS-C5008758Z0	HEX HEAD CAP SCREW, 1/2-13 X 7/8 LEN, GR8, ZN	8	
6	HHCS-C438A258Z1	HEX HEAD CAP SCREW, 7/16-14 X 1 1/4 LEN, GR8, ZN, FULL THREAD	1	
7	WSH2-X4380008Z0	SAE WASHER, 7/16, GR8, ZN	2	
8	729-02578	POINTER	1	
9	NUT2-C4380008Z0	HEX JAM NUT, 7/16-14, GR8, ZN	1	
10	1004652	LMI CABLE GUIDE	4	
11	NUT2-C3750008Z0	HEX JAM NUT, 3/8-16, GR8, ZN	4	
12	1004651	CABLE GUIDE MOUNT	4	
13	1004438	WELDMENT, LMI TIE OFF	1	
14	1032294	WELDMENT, TIP SECTION	1	
15	1032275	WELDMENT, 4TH SECTION	1	
16	1032255	WELDMENT, 3RD SECTION	1	
17	1032236	WELDMENT, 2ND SECTION	1	

WHEN ORDERING PARTS, SPECIFY MODEL NUMBER, SERIAL NUMBER AND DESCRIPTION OF PARTS REQUIRED

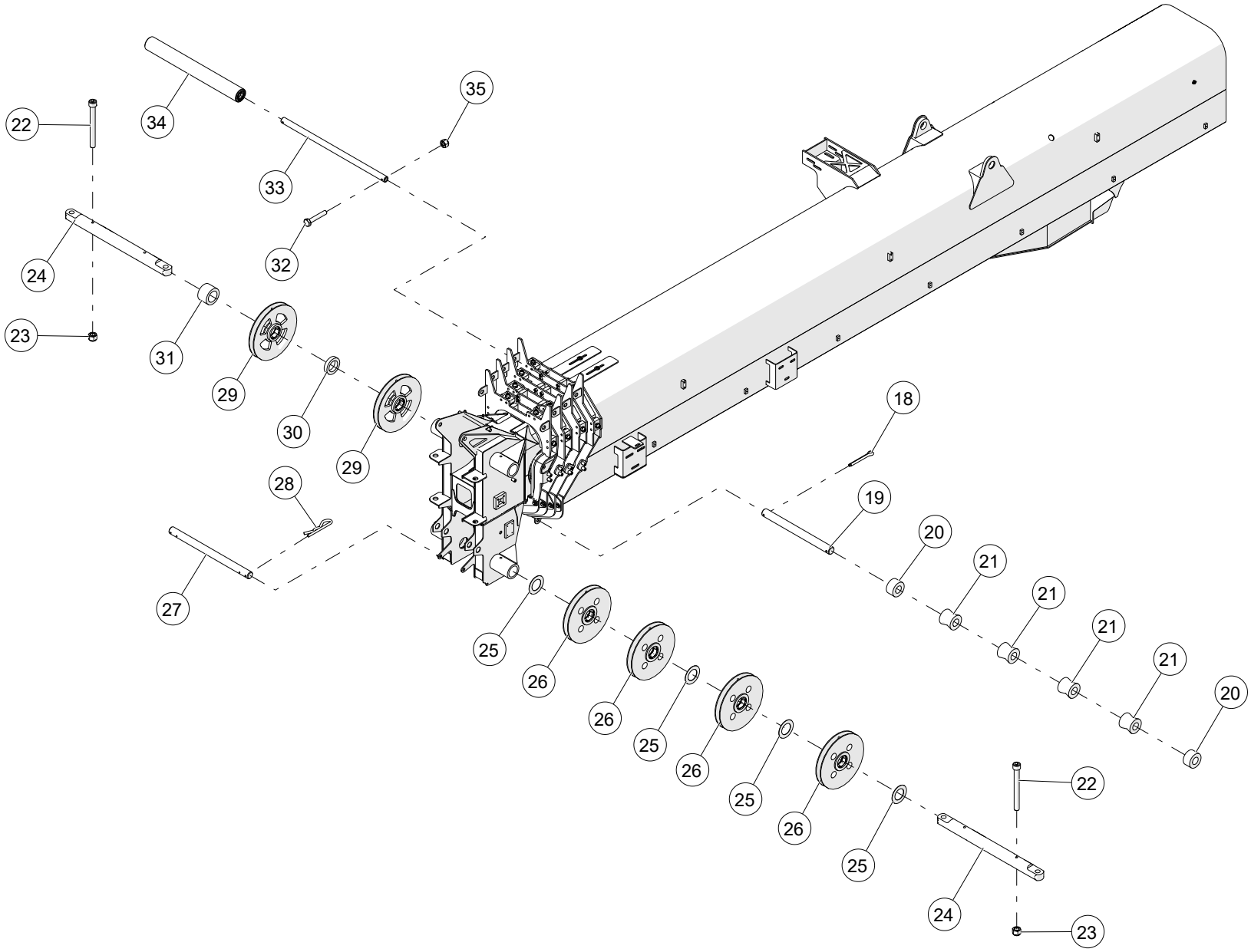

WHEN ORDERING PARTS, SPECIFY MODEL NUMBER, SERIAL NUMBER AND DESCRIPTION OF PARTS REQUIRED

BOOM ASSEMBLY

ITEM	PART NUMBER	DESCRIPTION	QUANTITY	NOTES
	1032204	**BOOM ASSEMBLY, 155FT, 50TON**		
18	PIN3-X250B00XZ0	COTTER PIN, 1/4 DIA X 2 LEN, ZINC	2	
19	1026760	ROUND, ROLLER SHAFT	1	
20	1026761	SPACER, BOTTOM ROLLERS	2	
21	1005003	ROLLER, WIRE ROPE	4	
22	SHCS-C500E00AB0	SOCKET HEAD CAP SCREW, 1/2-13 X 5 LEN, BO	14	
23	NUT3-C5000008Z0	NYLON LOCK NUT, 1/2-13, GR8, ZN	20	
24	1032411	PIN, BOOM HEAD SHAFT	2	
25	1035259	SPACER, BOOM HEAD SHEAVES	4	
26	**1035256**	ASSEMBLY, NYLON BOOM HEAD SHEAVE 5/8	4	SEE PAGE 83
27	1005006	ROUND, WIRE ROPE KEEPER	2	
28	PIN2-X125B00YZ0	HAIRPIN, 1/8 DIA X 2 LEN, ZINC	4	
29	1029874	ASSEMBLY, BOOM HEAD SHEAVE	2	
30	1032419	SPACER, BOOM HEAD TOP 1	1	
31	1032420	SPACER, 3" ID x 4.5" OD X 2.97" THK	1	
32	HHCS-C250A508Z0	HEX HEAD CAP SCREW, 1/4-20 X 1 1/2 LEN, GR8, ZN	8	
33	1005432	HOLLOW SHAFT, WINCH ROPE ROLLER SUPPORT	4	
34	1004635	ASSEMBLY, ROLLER	4	
35	NUT3-C2500008Z0	NYLON LOCK NUT, 1/4-20, GR8, ZN	8	

WHEN ORDERING PARTS, SPECIFY MODEL NUMBER, SERIAL NUMBER AND DESCRIPTION OF PARTS REQUIRED

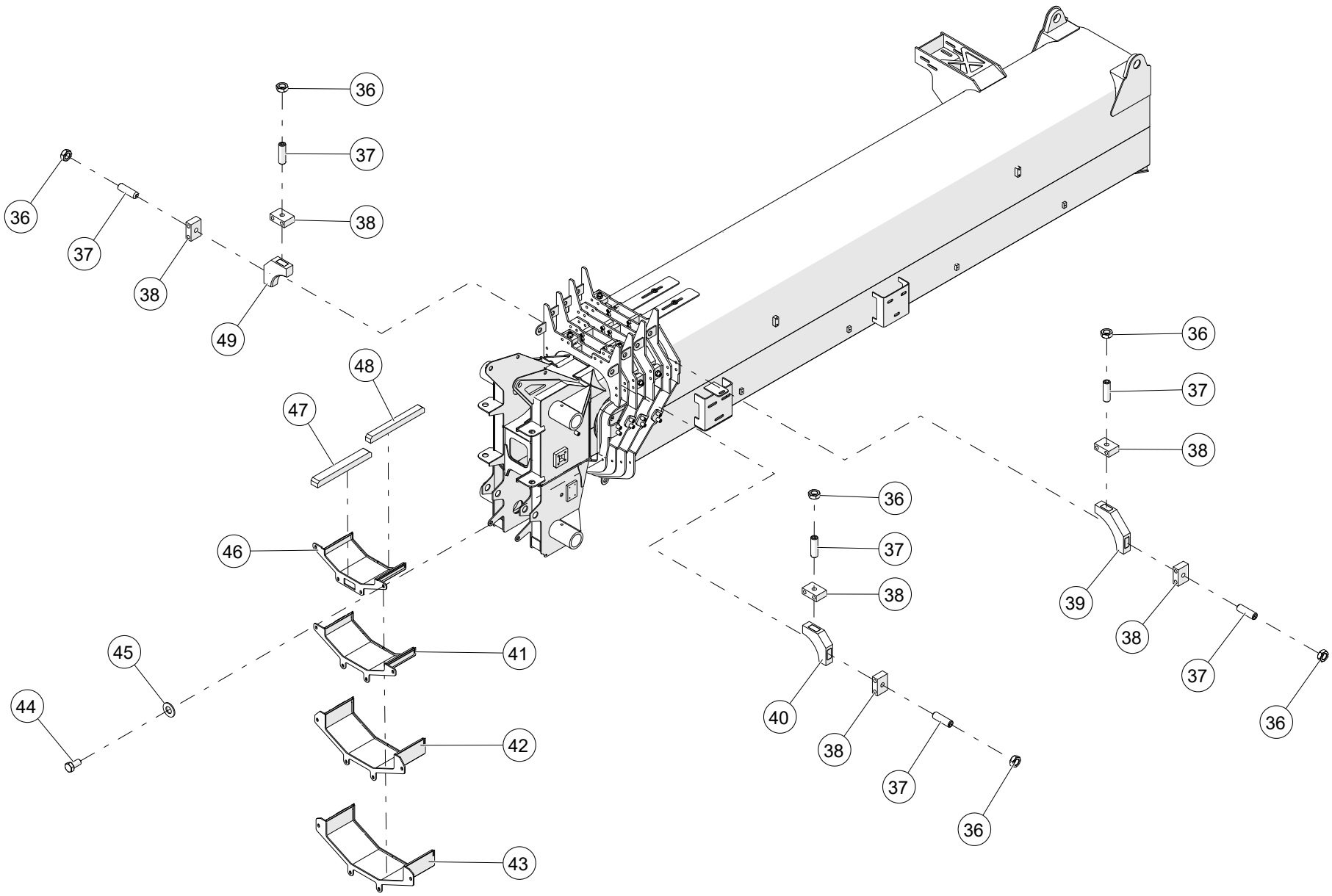

WHEN ORDERING PARTS, SPECIFY MODEL NUMBER, SERIAL NUMBER AND DESCRIPTION OF PARTS REQUIRED

ITEM	PART NUMBER	DESCRIPTION	QUANTITY	NOTES
	1032204	**BOOM ASSEMBLY, 155FT, 50TON**		
36	NUT2-C7500005Z0	HEX JAM NUT, 3/4-10, GR5, ZN	16	
37	SS01-C750B50CB0	SET SCREW, 3/4-10 X 2 1/2 LEN, BO	16	
38	1004338	BAR, WEAR PAD ADJUSTING	16	
39	1004346	WEAR PAD ASM, FRONT UPPER LARGE	2	
40	1004349	WEAR PAD ASM, FRONT UPPER SMALL	4	
41	1032397	WELDMENT, WEAR PAD TRAY, 4TH SECTION	1	
42	1032393	WELDMENT, WEAR PAD TRAY, 3RD SECTION	1	
43	1032388	WELDMENT, WEAR PAD TRAY, 2ND SECTION	1	
44	HHCS-C500A008Z0	HEX HEAD CAP SCREW, 1/2-13 X 1 LEN, GR8, ZN	16	
45	WSH2-X6250008Z0	SAE WASHER, 5/8, GR8, ZN	22	
46	1032402	WLDEMENT, WEAR PAD TRAY, 5TH SECTION	1	
47	1004340	WEAR PAD, FRONT LOWER THICK	70	
48	1004339	WEAR PAD, FRONT LOWER THIN	34	
49	1032544	WEAR PAD ASM, FRONT UPPER SMALL	2	

WHEN ORDERING PARTS, SPECIFY MODEL NUMBER, SERIAL NUMBER AND DESCRIPTION OF PARTS REQUIRED

BOOM ASSEMBLY

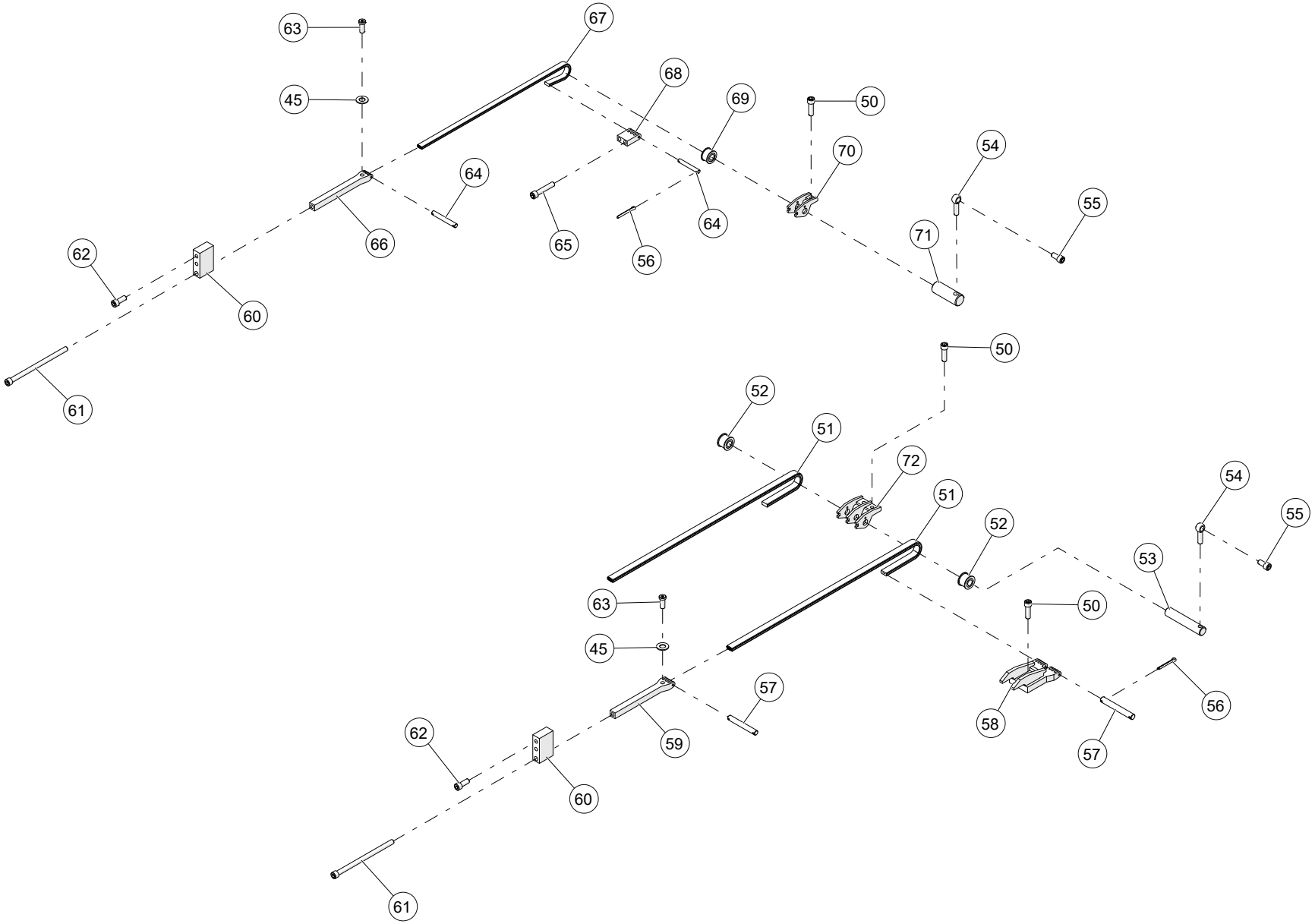

WHEN ORDERING PARTS, SPECIFY MODEL NUMBER, SERIAL NUMBER AND DESCRIPTION OF PARTS REQUIRED

ITEM	PART NUMBER	DESCRIPTION	QUANTITY	NOTES
	1032204	**BOOM ASSEMBLY, 155FT, 50TON**		
50	SHCS-C375A25AB0	SOCKET HEAD CAP SCREW, 3/8-16 X 1 1/4 LEN, BO	7	
51	1032386	LEAF CHAIN BL566	2	
52	1004400	ASSEMBLY, CHAIN SHEAVE BL566	2	
53	1004641	PIN, 1 DIA X 4 5/16 LEN	1	
54	1005446	ROD END, 3/8	5	
55	SHCS-C375750AB0	SOCKET HEAD CAP SCREW, 3/8-16 X 3/4 LEN, BO	5	
56	PIN3-X063500XZ0	COTTER PIN, 1/16 DIA X 1/2 LEN, ZINC	12	
57	1005000	PIN, CONNECTING BL566 LEAF CHAIN	4	
58	1004758	WELDMENT, CHAIN ANCHOR BL566	1	
59	1004757	ANCHOR, BL566 CHAIN	2	
60	1004762	BAR, CHAIN ANCHOR	4	
61	SHCS-C500H50AB1	SOCKET HEAD CAP SCREW, 1/2-13 X 8 1/2 LEN, BO, FULL THREAD	8	
62	SHCS-C500A25AB0	SOCKET HEAD CAP SCREW, 1/2-13 X 1 1/4 LEN, BO	31	
63	SH01-C500A25AB0	SHCS LOW HEAD, 1/2-13 X 1 1/4 LEN, BO	10	
64	1004999	PIN, CONNECTING BL466 LEAF CHAIN	4	
65	SHCS-C375B00AB0	SOCKET HEAD CAP SCREW, 3/8-16 X 2 LEN, BO	8	
66	1004763	ANCHOR, BL466 CHAIN	2	
67	1032387	LEAF CHAIN BL466	2	
68	1004764	ANCHOR, BL466 CHAIN	2	
69	1004403	ASSEMBLY, CHAIN SHEAVE BL466	2	
70	1004406	WELDMENT, CHAIN ANCHOR BL466	2	
71	1004642	PIN, 1 DIA X 2 3/4 LEN	2	
72	1004409	WELDMENT, CHAIN ANCHOR BL566	1	

WHEN ORDERING PARTS, SPECIFY MODEL NUMBER, SERIAL NUMBER AND DESCRIPTION OF PARTS REQUIRED

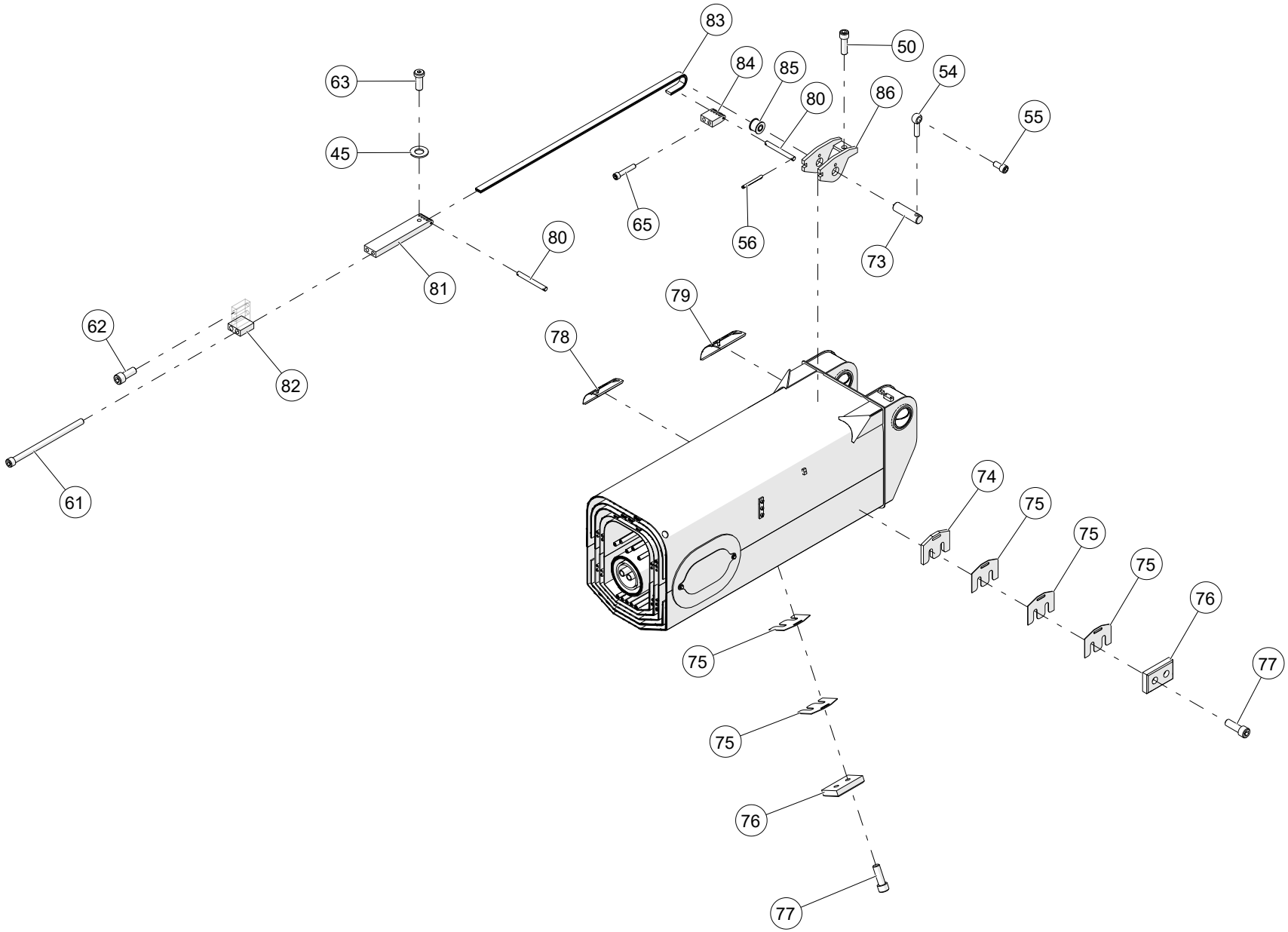

WHEN ORDERING PARTS, SPECIFY MODEL NUMBER, SERIAL NUMBER AND DESCRIPTION OF PARTS REQUIRED

ITEM	PART NUMBER	DESCRIPTION	QUANTITY	NOTES
	1032204	**BOOM ASSEMBLY, 155FT, 50TON**		
73	1004640	PIN, 1 DIA X 3 5/8 LEN	2	
74	1004820	SHIM, WEAR PAD	4	
75	1004809	SHIM, WEAR PAD	24	
76	1004808	WEAR PAD, REAR LOWER	10	
77	SHCS-C500A50AB0	SOCKET HEAD CAP SCREW, 1/2-13 X 1 1/2 LEN, BO	40	
78	1004336	WEAR PAD, REAR UPPER SMALL	4	
79	1004337	WEAR PAD, REAR UPPER LARGE	4	
80	1005001	PIN, CONNECTING BL588 LEAF CHAIN	4	
81	1004752	ANCHOR, BL588 CHAIN	2	
82	1004754	WELDMENT, CHAIN ANCHOR BL588	2	
83	1032385	LEAF CHAIN BL588	2	
84	1004753	ANCHOR, BL588 CHAIN	2	
85	1004397	ASSEMBLY, CHAIN SHEAVE BL588	2	
86	1004413	WELDMENT, CHAIN ANCHOR BL588	2	

WHEN ORDERING PARTS, SPECIFY MODEL NUMBER, SERIAL NUMBER AND DESCRIPTION OF PARTS REQUIRED

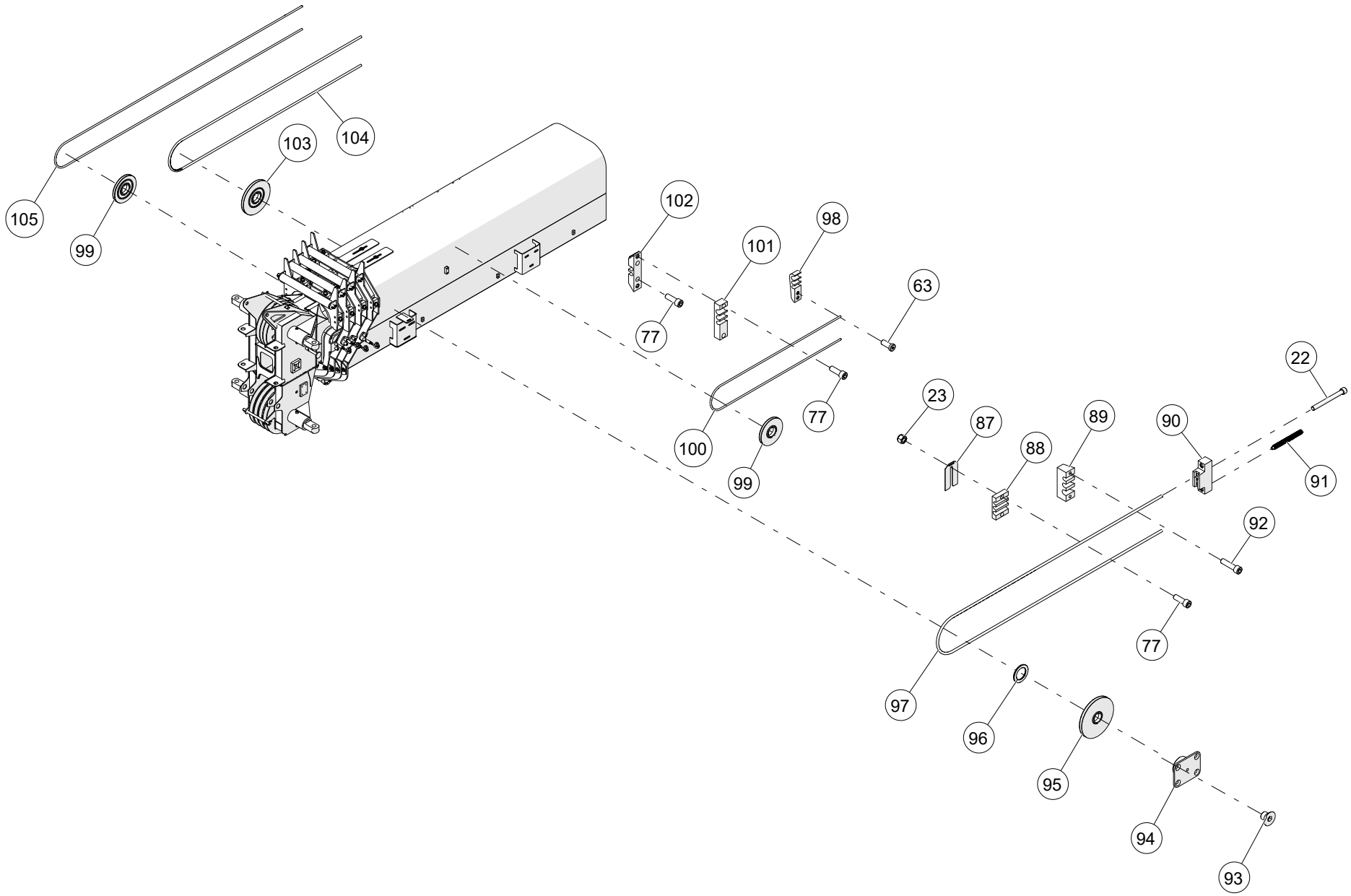

WHEN ORDERING PARTS, SPECIFY MODEL NUMBER, SERIAL NUMBER AND DESCRIPTION OF PARTS REQUIRED

ITEM	PART NUMBER	DESCRIPTION	QUANTITY	NOTES
	1032204	**BOOM ASSEMBLY, 155FT, 50TON**		
87	1004384	SHIM, WEAR PAD	2	
88	1032422	GUIDE BLOCK, THREE SLOT WIRE ROPE	2	
89	1032409	BAR, LH LARGE ROPE ANCHOR	1	
90	1004632	ASSEMBLY, 4TH SECTION EXTEND ROPE ANCHOR	2	
91	1004615	ROUND, THREADED ROD 7/8-9 UNC	8	
92	SHCS-C500B00AB1	SOCKET HEAD CAP SCREW, 1/2-13 X 2 LEN, BO, FULL THREAD	8	
93	SH02-C500563BB0	SHCS C'SUNK HEAD, 1/2-13 X 9/16 LEN, BO	40	
94	1040810	BEARING SUPPORT, SIDE SHEAVE	10	
95	1004386	ASSEMBLY, EXTEND SHEAVE LARGE	2	
96	1032421	EXTEND SHEAVE SPACER, LARGE SHEAVE	2	
97	1032340	WIRE ROPE, 3/4 DIA, 50155 BOOM EXT	2	
98	1032869	ROPE GUIDE ASM, SECTION 4	2	
99	1004389	ASSEMBLY, EXTEND SHEAVE SMALL	4	
100	1032342	WIRE ROPE, 1/2 DIA, 50155 BOOM EXT	2	
101	1032872	ROPE GUIDE, SECTION 5, OUTER	2	
102	1032873	ROPE GUIDE ASM, SECTION 5, INNER	2	
103	1004392	ASSEMBLY, EXTEND SHEAVE MEDIUM	4	
104	1032341	WIRE ROPE, 5/8 DIA, 50155 BOOM EXT	2	
105	1032344	WIRE ROPE, 1/2 DIA, 50155 BOOM EXT	2	

WHEN ORDERING PARTS, SPECIFY MODEL NUMBER, SERIAL NUMBER AND DESCRIPTION OF PARTS REQUIRED

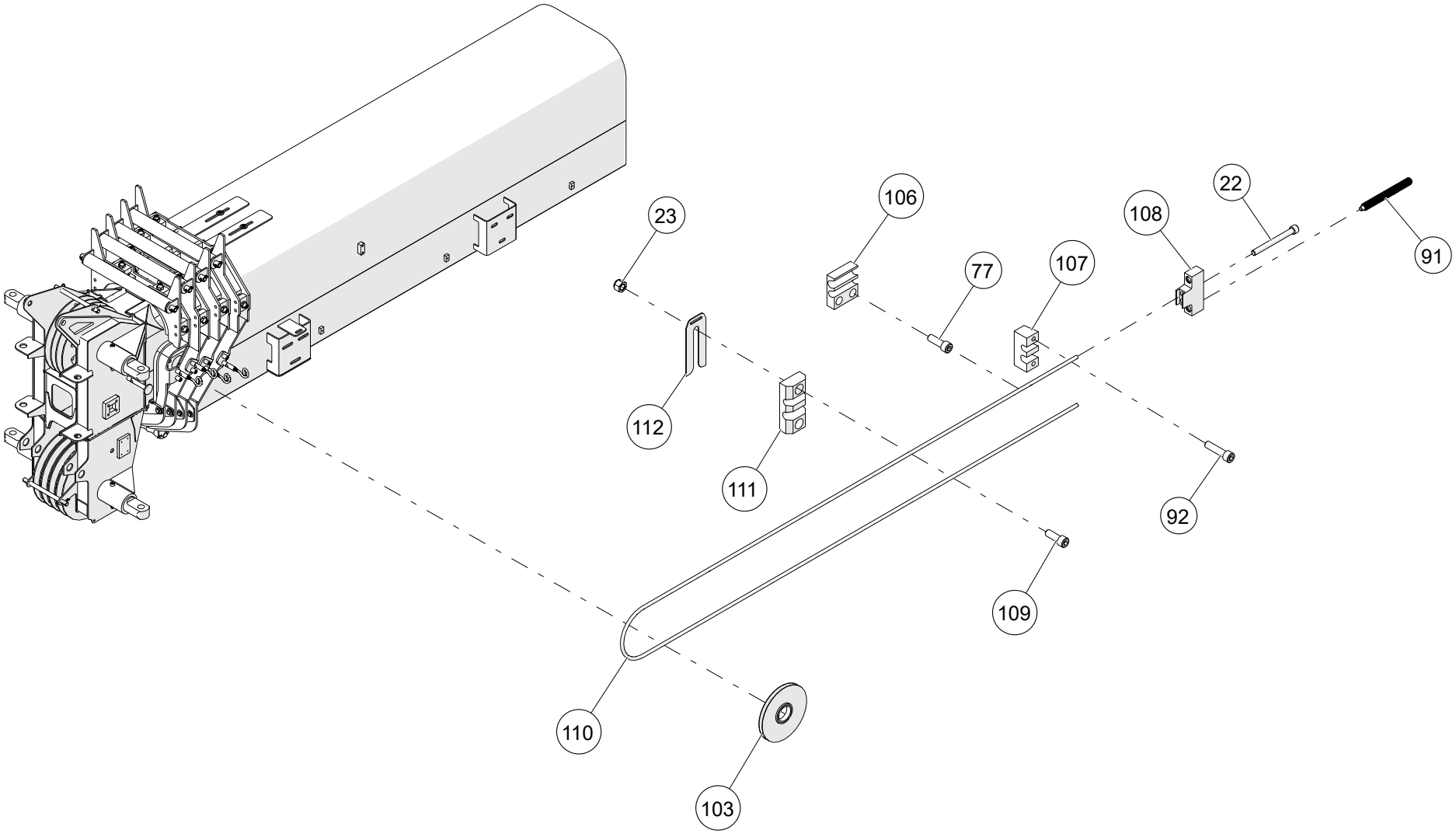

WHEN ORDERING PARTS, SPECIFY MODEL NUMBER, SERIAL NUMBER AND DESCRIPTION OF PARTS REQUIRED

ITEM	PART NUMBER	DESCRIPTION	QUANTITY	NOTES
	1032204	**BOOM ASSEMBLY, 155FT, 50TON**		
106	1032871	ROPE GUIDE, SECTION 6	2	
107	1032407	BAR, LH SMALL ROPE ANCHOR	1	
108	1004629	ASSEMBLY, 5TH SECTION EXTEND ROPE ANCHOR	2	
109	SHCS-C500A37AB0	SOCKET HEAD CAP SCREW, 1/2-13 X 1 3/8 LEN, BO	4	
110	1032343	WIRE ROPE, 5/8 DIA, 50155 BOOM EXT	2	
111	1004609	GUIDE BLOCK, TWO SLOT WIRE ROPE	2	
112	1004385	SHIM, WEAR PAD	2	

WHEN ORDERING PARTS, SPECIFY MODEL NUMBER, SERIAL NUMBER AND DESCRIPTION OF PARTS REQUIRED

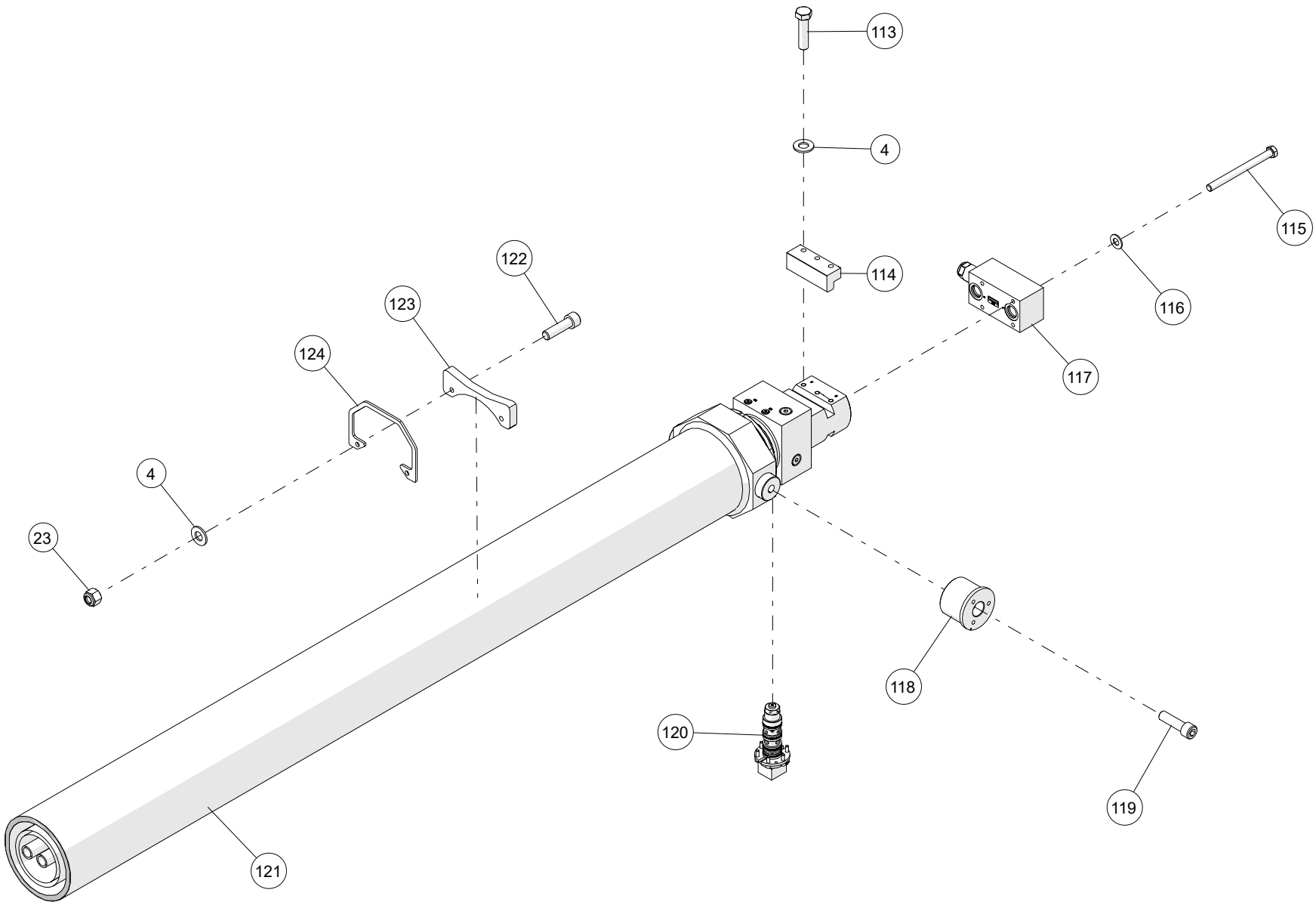

WHEN ORDERING PARTS, SPECIFY MODEL NUMBER, SERIAL NUMBER AND DESCRIPTION OF PARTS REQUIRED

ITEM	PART NUMBER	DESCRIPTION	QUANTITY	NOTES
	1032204	**BOOM ASSEMBLY, 155FT, 50TON**		
113	HHCS-C500B008Z0	HEX HEAD CAP SCREW, 1/2-13 X 2 LEN, GR8, ZN	6	
114	1004748	BAR, CLAMP, LOWER EXTEND CYLINDER	2	
115	HHCS-C375D508Z1	HEX HEAD CAP SCREW, 3/8-16 X 4 1/2 LEN, GR8, ZN, FULL THREAD	4	
116	WSH2-X3750008Z0	SAE WASHER, 3/8, GR8, ZN	4	
117	1008354	VALVE, REGEN	1	
118	1004745	ROUND, CYLINDER RETAINING CUP	2	
119	SHCS-CA00C50AB0	SOCKET HEAD CAP SCREW, 1-8 X 3 1/2 LEN, BO	2	
120	1036582	LOAD CONTROL VALVE, CINDY, 20-B CTD-S300-L-G12-7-S1601	1	
121	1032345	CYLINDER, TELESCOPE	1	
122	SHCS-C500A75AB1	SOCKET HEAD CAP SCREW, 1/2-13 X 1 3/4 LEN, BO, FULL THREAD	8	
123	1041492	WEAR, TELE ROPES	4	
124	1039375	PLATE, TELE ROPE RETAINER	4	

WHEN ORDERING PARTS, SPECIFY MODEL NUMBER, SERIAL NUMBER AND DESCRIPTION OF PARTS REQUIRED

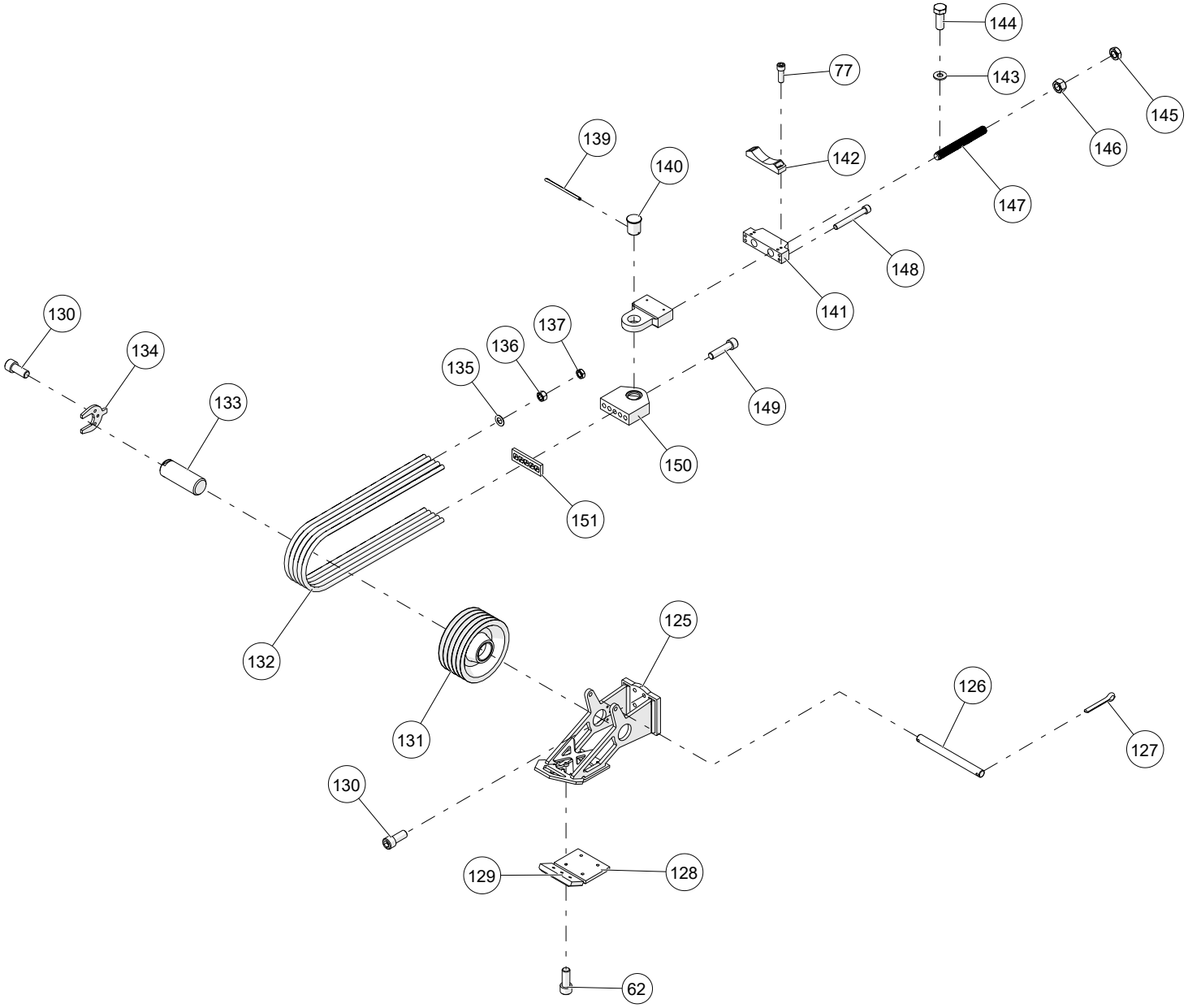

WHEN ORDERING PARTS, SPECIFY MODEL NUMBER, SERIAL NUMBER AND DESCRIPTION OF PARTS REQUIRED

ITEM	PART NUMBER	DESCRIPTION	QUANTITY	NOTES
	1032204	**BOOM ASSEMBLY, 155FT, 50TON**		
125	1004617	WELDMENT, CYLINDER HEAD	1	
126	1004644	ROUND, WIRE ROPE KEEPER	1	
127	PIN3-X250A50XZ0	COTTER PIN, 1/4 DIA X 1 1/2 LEN, ZINC	2	
128	1004345	WEAR PAD, CYLINDER HEAD SUPPORT REAR	1	
129	1004344	WEAR PAD, CYLINDER HEAD SUPPORT FRONT	1	
130	SHCS-C750A75AB0	SOCKET HEAD CAP SCREW, 3/4-10 X 1 3/4 LEN, BO	9	
131	**1004394**	ASSEMBLY, WIRE ROPE SHEAVE	1	SEE PAGE 87
132	1032384	WIRE ROPE, 7/8 DIA, 50155 BOOM TELE	5	
133	1004645	PIN, 3 1/2 DIA X 9 1/2 LEN	1	
134	1034963	PLATE, RETAINER CLIP	1	
135	WSH2-XA120008Z0	SAE WASHER, 1-1/8, GR8, ZN	5	
136	NUT1-CA120008Z0	HEX NUT, 1 1/8-7, GR8, ZN	5	
137	NUT2-CA120008Z0	HEX JAM NUT, 1 1/8-7, GR8, ZN	5	
138	1004612	PLATE, 4TH SECTION EXTEND ANCHOR CLEVIS	1	
139	PIN3-X250D00XZ0	COTTER PIN, 1/4 DIA X 4 LEN, ZINC	1	
140	1004639	PIN, 2 1/2 DIA X 2 15/16 LEN	1	
141	1032413	PLATE, 4TH STAGE EXTEND ROPE ANCHOR	1	
142	1032414	WEAR PAD, CYLINDER HEAD SUPPORT	1	
143	WSH2-X2500008Z0	SAE WASHER, 1/4, GR8, ZN	2	
144	HHCS-C375A005Z0	HEX HEAD CAP SCREW, 3/8-16 X 1 LEN, GR5, ZN	2	
145	NUT2-CA500008Z0	HEX JAM NUT, 1 1/2-6, GR8, ZN	2	
146	NUT1-CA500008Z0	HEX NUT, 1 1/2-6, GR8, ZN	2	
147	1004611	ROUND, THREADED ROD 1 1/2-6 UNC	2	
148	SHCS-C500D00AB1	SOCKET HEAD CAP SCREW, 1/2-13 X 4 LEN, BO, FULL THREAD	4	
149	SHCS-C875C50AB0	SOCKET HEAD CAP SCREW, 7/8-9 X 3 1/2 LEN, BO	5	
150	1004613	PLATE, 4TH SECTION EXTEND ANCHOR CLEVIS	1	
151	1031163	TORQUE PLATE	1	

WHEN ORDERING PARTS, SPECIFY MODEL NUMBER, SERIAL NUMBER AND DESCRIPTION OF PARTS REQUIRED

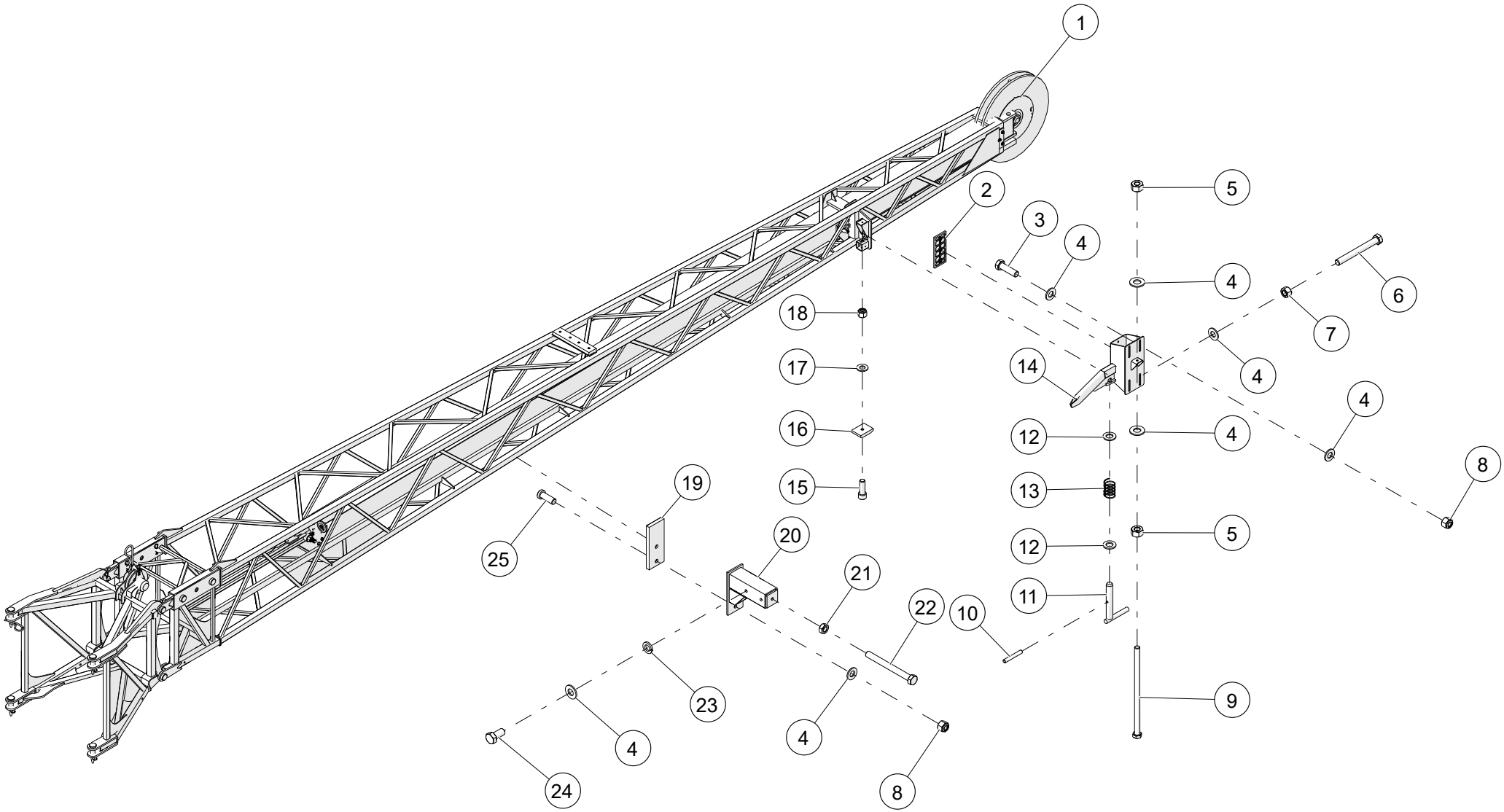

WHEN ORDERING PARTS, SPECIFY MODEL NUMBER, SERIAL NUMBER AND DESCRIPTION OF PARTS REQUIRED

ITEM	PART NUMBER	DESCRIPTION	QUANTITY	NOTES
	1036225	**JIB STOWAGE**		
1	**1036252**	JIB ASSEMBLY, 32'-49'	1	SEE PAGE 77
2	709-1564	PAD	1	
3	HHCS-C500A758Z0	HEX HEAD CAP SCREW, 1/2-13 X 1 3/4 LEN, GR8, ZN	4	
4	WSH2-X5000008Z0	SAE WASHER, 1/2, GR8, ZN	28	
5	NUT5-C5000008Z0	HEAVY HEX NUT, 1/2-13, GR8, ZN	2	
6	HHCS-C500D508Z1	HEX HEAD CAP SCREW, 1/2-13 X 4 1/2 LEN, GR8, ZN, FULL THREAD	1	
7	NUT1-C5000008Z0	HEX NUT, 1/2-13, GR8, ZN	4	
8	NUT3-C5000008Z0	NYLON LOCK NUT, 1/2-13, GR8, ZN	10	
9	HHCS-C500K008Z1	HEX HEAD CAP SCREW, 1/2-13 X 10 LEN, GR8, ZN, FULL THREAD	1	
10	1227-258	PIN, ROLL 1/4 X 1 3/4	1	
11	712F0215	WELDMENT, HANDLE	1	
12	WSH2-X7500008Z0	SAE WASHER, 3/4, GR8, ZN	2	
13	371-0101	SPRING COMPRESSION	1	
14	709F7316	WELDMENT, JIB STOWAGE BRACKET	1	
15	SHCS-C375A12AB0	SOCKET HEAD CAP SCREW, 3/8-16 X 1 1/8 LEN, BO	1	
16	709-7384	WEAR PAD	1	
17	WSH2-X3750008Z0	SAE WASHER, 3/8, GR8, ZN	5	
18	NUT3-C3750008Z0	NYLON LOCK NUT, 3/8-16, GR8, ZN	5	
19	1036226	WEAR, ANTI ROTATION	1	
20	1036239	WELDMENT, ANTI ROTATION	1	
21	NUT2-C5000008Z0	HEX JAM NUT, 1/2-13, GR8, ZN	3	
22	HHCS-C500E008Z1	HEX HEAD CAP SCREW, 1/2-13 X 5 LEN, GR8, ZN, FULL THREAD	1	
23	WSH4-X5000008Z0	SPIRAL LOCK WASHER, 1/2, GR8, ZN	4	
24	HHCS-C500A008Z0	HEX HEAD CAP SCREW, 1/2-13 X 1 LEN, GR8, ZN	4	
25	SH01-C500A37AB0	SHCS LOW HEAD, 1/2-13 X 1 3/8 LEN, BO	2	

WHEN ORDERING PARTS, SPECIFY MODEL NUMBER, SERIAL NUMBER AND DESCRIPTION OF PARTS REQUIRED

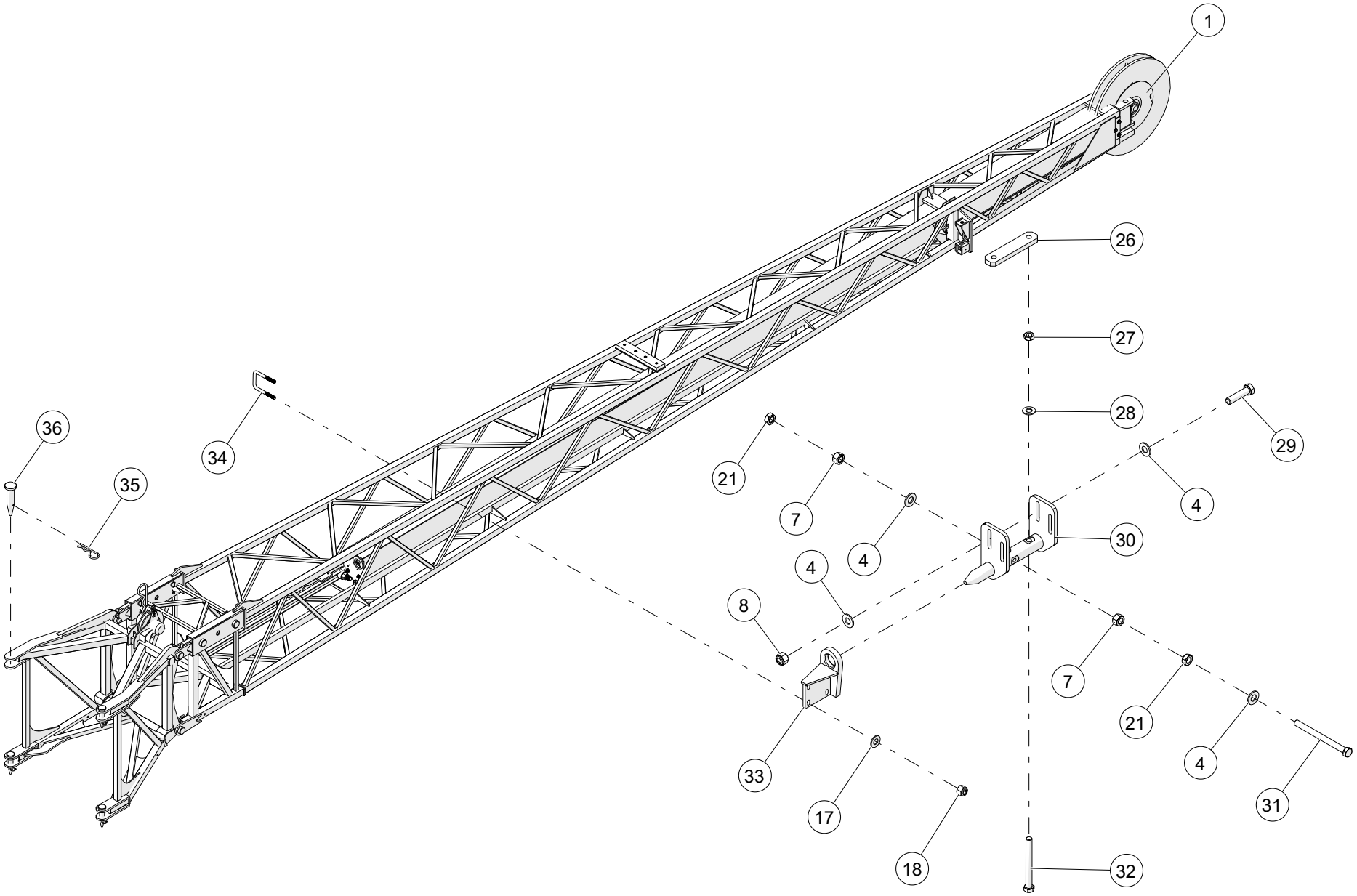

WHEN ORDERING PARTS, SPECIFY MODEL NUMBER, SERIAL NUMBER AND DESCRIPTION OF PARTS REQUIRED

JIB STOWAGE

ITEM	PART NUMBER	DESCRIPTION	QUANTITY	NOTES
	1036225	**JIB STOWAGE**		
26	709-7342	PLATE, BAR	1	
27	NUT2-C6250008Z0	HEX JAM NUT, 5/8-11, GR8, ZN	2	
28	WSH2-X6250008Z0	SAE WASHER, 5/8, GR8, ZN	2	
29	HHCS-C500B008Z0	HEX HEAD CAP SCREW, 1/2-13 X 2 LEN, GR8, ZN	4	
30	1036227	WELDMENT, PIN	1	
31	HHCS-C500F008Z1	HEX HEAD CAP SCREW, 1/2-13 X 6 LEN, GR8, ZN, FULL THREAD	1	
32	HHCS-C625F008Z1	HEX HEAD CAP SCREW, 5/8-11 X 6 LEN, GR8, ZN, FULL THREAD	2	
33	1036230	WELDMENT, FRONT PIN BRACKET	1	
34	708-2742	ROD, U BOLT	2	
35	PIN2-X172C75YZ0	HAIRPIN, 11/64 DIA X 3 3/4 LEN, ZINC	4	
36	1036680	ROUND, JIB PIN	4	

WHEN ORDERING PARTS, SPECIFY MODEL NUMBER, SERIAL NUMBER AND DESCRIPTION OF PARTS REQUIRED

JIB ASSEMBLY, 32’- 49’

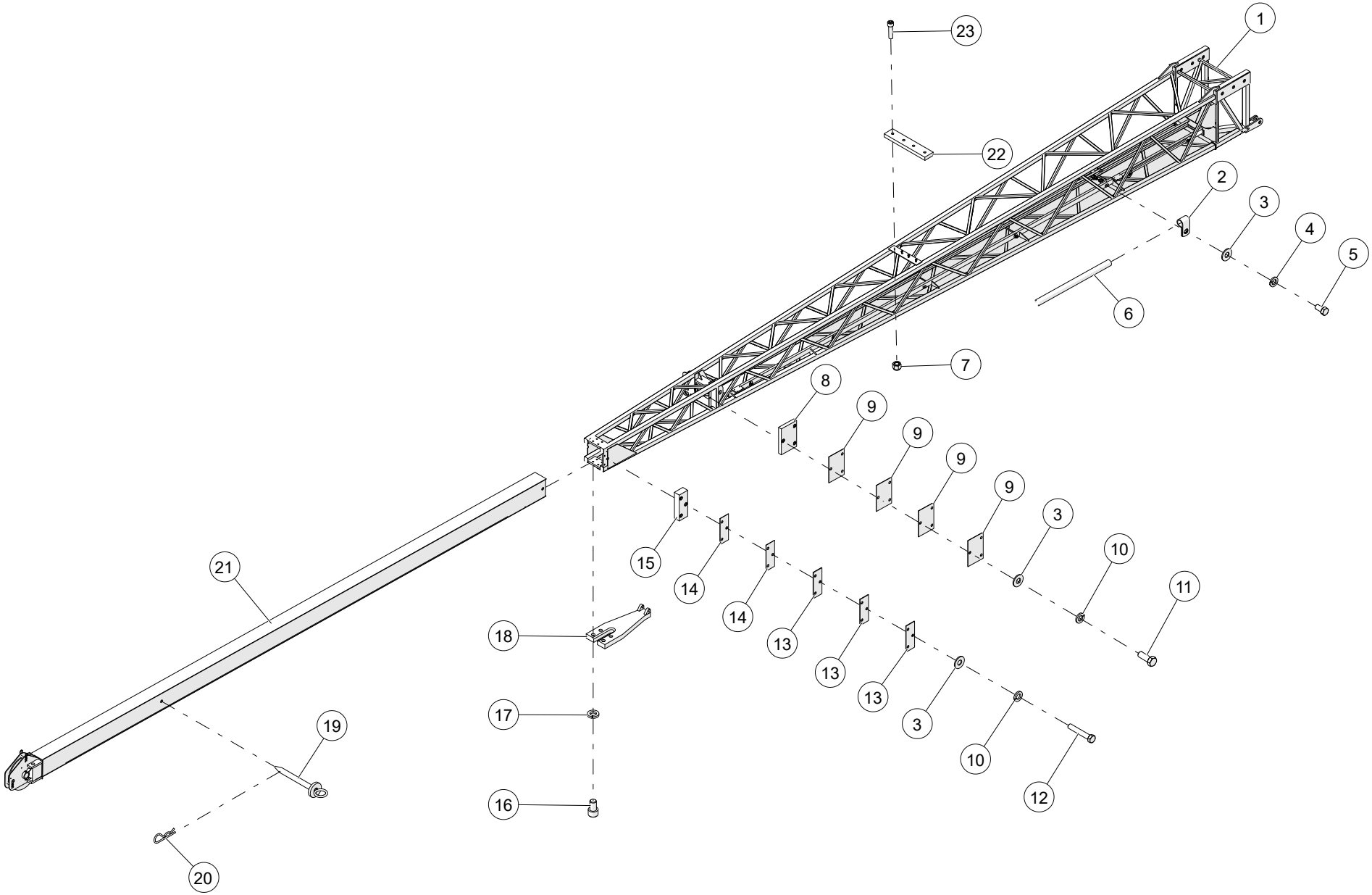

WHEN ORDERING PARTS, SPECIFY MODEL NUMBER, SERIAL NUMBER AND DESCRIPTION OF PARTS REQUIRED

JIB ASSEMBLY, 32’- 49’

ITEM	PART NUMBER	DESCRIPTION	QUANTITY	NOTES
	1036252	**JIB ASSEMBLY, 32’- 49’**		
1	1036274	WELDMENT, JIB BASE	1	
2	200B2007-4	CLAMP, MED, 1/2 ID	7	
3	WSH3-X3750008Z0	FENDER WASHER, 3/8, GR8, ZN	23	
4	WSH4-X4380008Z0	SPIRAL LOCK WASHER, 7/16, GR8, ZN	7	
5	HHCS-C3757508Z0	HEX HEAD CAP SCREW, 3/8-16 X 3/4 LEN, GR8, ZN	7	
6	1036686	TUBE, ATB CABLE 2	1	
7	NUT3-C3750008Z0	NYLON LOCK NUT, 3/8-16, GR8, ZN	6	
8	1036341	WEAR PAD	2	
9	1036262	PLATE, 1/16" SHIIM	8	
10	WSH4-X3750008Z0	SPIRAL LOCK WASHER, 3/8, GR8, ZN	16	
11	HHCS-C375A008Z0	HEX HEAD CAP SCREW, 3/8-16 X 1 LEN, GR8, ZN	6	
12	HHCS-C375B258Z0	HEX HEAD CAP SCREW, 3/8-16 X 2 1/4 LEN, GR8, ZN	6	
13	1036281	SHIM 1/8	6	
14	1036280	SHIM, 1/16"	4	
15	1036338	FRONT SIDE WEAR PAD	2	
16	SHCS-C625A00AB0	SOCKET HEAD CAP SCREW, 5/8-11 X 1 LEN, BO	4	
17	WSH5-X5000002Z0	SPIRAL LOCK WASHER, 1/2, GR2, ZN	4	
18	709F7154	BRACKET	1	
19	707F8527	PIN	1	
20	CALL FOR ASSISTANCE	CUSTOM HAIRPIN COTTER PIN	NA	
21	1036327	WELDMENT, STINGER	1	
22	1036679	WEAR, TOP CABLE	1	
23	SHCS-C375A50AB1	SOCKET HEAD CAP SCREW, 3/8-16 X 1 1/2 LEN, BO, FULL THREAD	4	

WHEN ORDERING PARTS, SPECIFY MODEL NUMBER, SERIAL NUMBER AND DESCRIPTION OF PARTS REQUIRED

JIB ASSEMBLY, 32’-49’

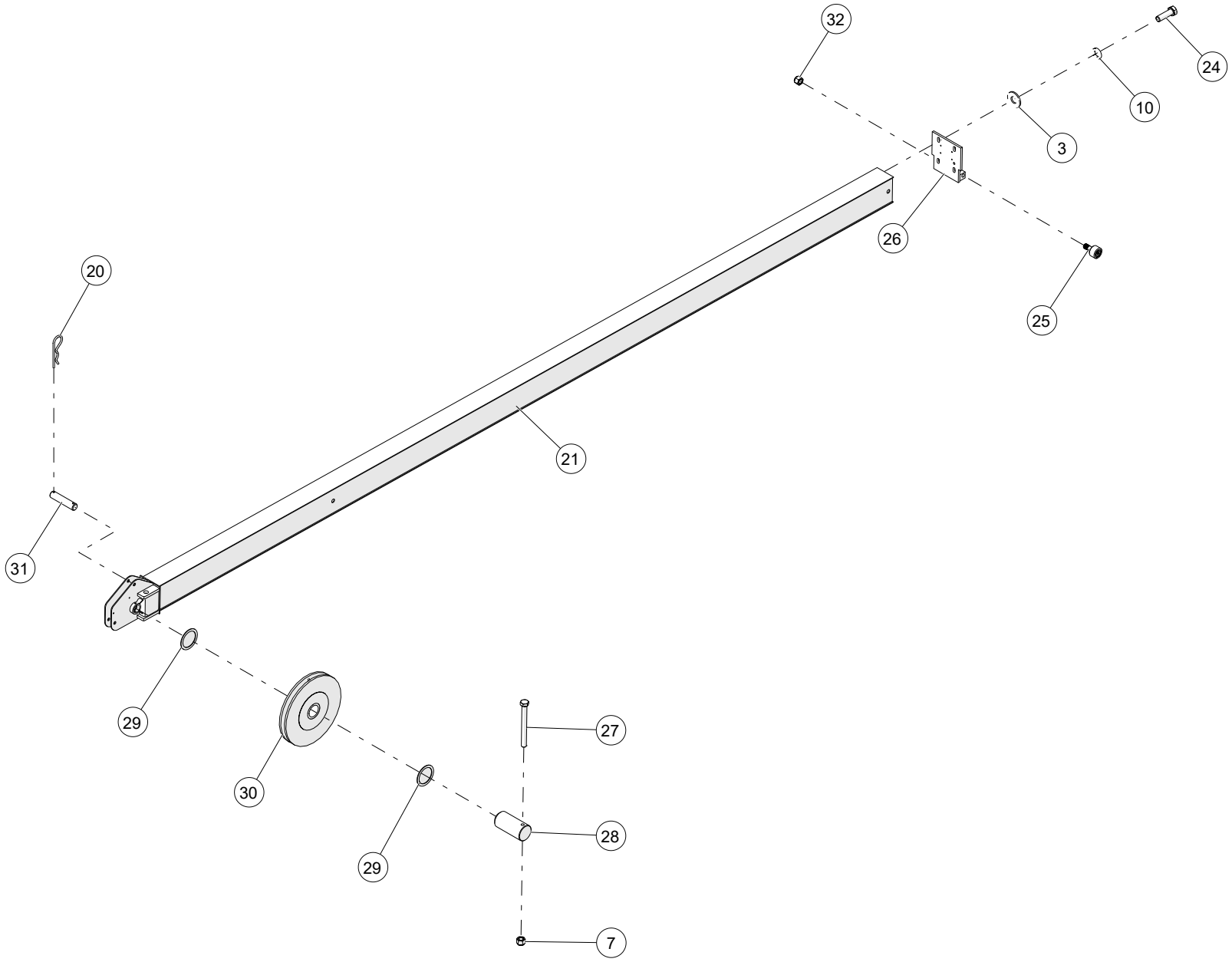

WHEN ORDERING PARTS, SPECIFY MODEL NUMBER, SERIAL NUMBER AND DESCRIPTION OF PARTS REQUIRED

ITEM	PART NUMBER	DESCRIPTION	QUANTITY	NOTES
	1036252	**JIB ASSEMBLY, 32’- 49’**		
24	HHCS-C375A258Z1	HEX HEAD CAP SCREW, 3/8-16 X 1 1/4 LEN, GR8, ZN, FULL THREAD	4	
25	1036253	ROLLER	2	
26	1036256	WELDMENT, BRACKET	1	
27	HHCS-C375C758Z0	HEX HEAD CAP SCREW, 3/8-16 X 3 3/4 LEN, GR8, ZN	1	
28	1036667	ROUND, PIN	2	
29	1036326	SPACER	4	
30	1036324	NYLON SHEAVE	1	
31	38490	PIN	3	

WHEN ORDERING PARTS, SPECIFY MODEL NUMBER, SERIAL NUMBER AND DESCRIPTION OF PARTS REQUIRED

JIB ASSEMBLY, 32’-49’

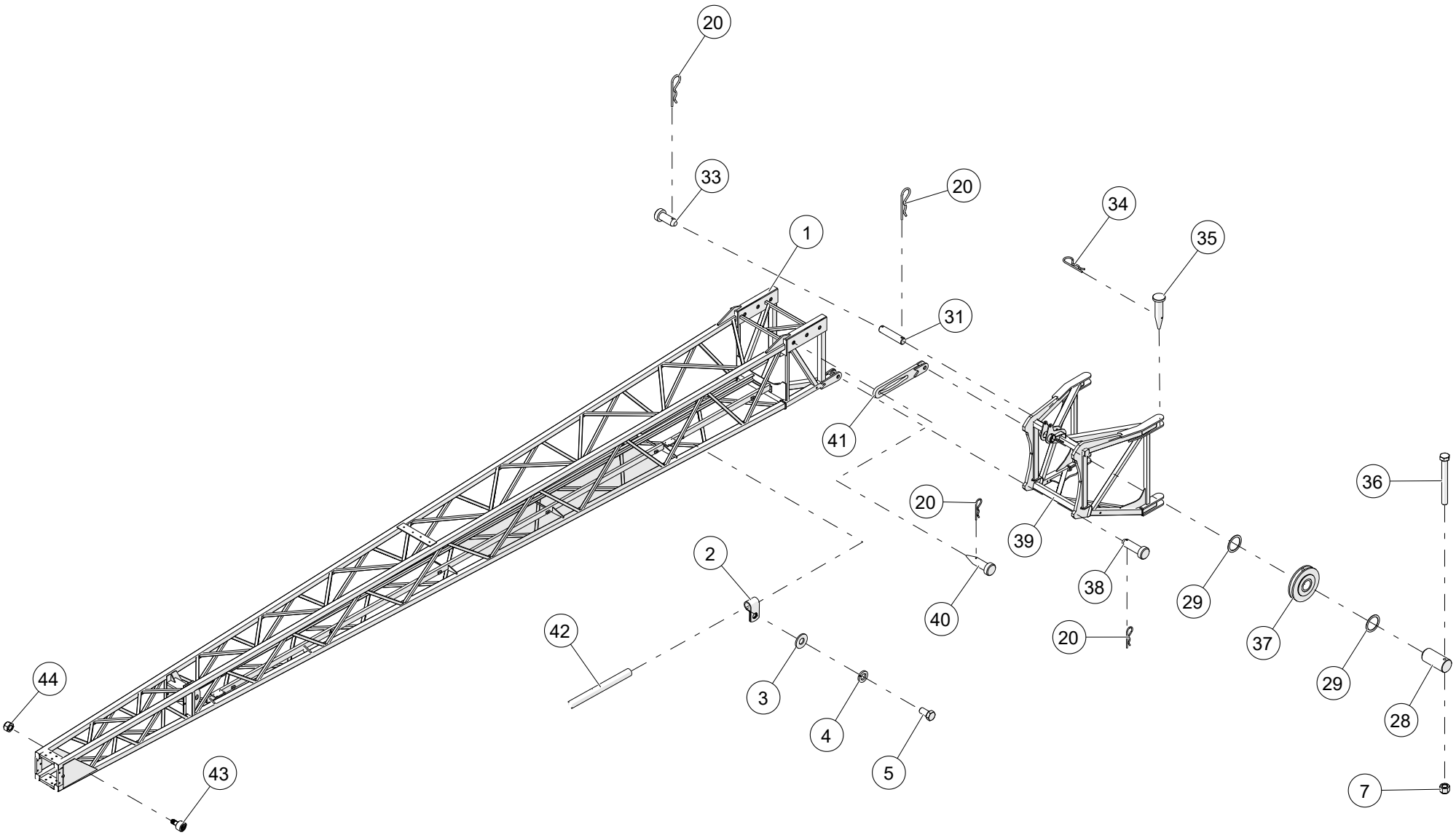

WHEN ORDERING PARTS, SPECIFY MODEL NUMBER, SERIAL NUMBER AND DESCRIPTION OF PARTS REQUIRED

ITEM	PART NUMBER	DESCRIPTION	QUANTITY	NOTES
	1036252	**JIB ASSEMBLY, 32’- 49’**		
32	NUT3-F6250008Z0	NYLON LOCK NUT, 5/8-18, GR8, ZN	2	
33	1036323	ROUND, ADAPTER TO LINK PIN	2	
34	PIN2-X172C75YZ0	HAIRPIN, 11/64 DIA X 3 3/4 LEN, ZINC	15	
35	1036680	ROUND, JIB PIN	4	
36	HHCS-C375C508Z0	HEX HEAD CAP SCREW, 3/8-16 X 3 1/2 LEN, GR8, ZN	1	
37	1036663	SHEAVE, TOP NYLON	1	
38	1036322	ROUND, ADAPTER TO LATTIC PIN	2	
39	1036263	WELDMENT, ADAPTOR FRAME	1	
40	1036255	ROUND, OFFSET PIN	4	
41	1036259	WELDMENT, LINK	2	
42	1036685	TUBE, ATB CABLE 1	1	
43	1036254	ROLLER	2	
44	NUT3-F4380008Z0	NYLON LOCK NUT, 7/16-20, GR8, ZN	2	

WHEN ORDERING PARTS, SPECIFY MODEL NUMBER, SERIAL NUMBER AND DESCRIPTION OF PARTS REQUIRED

NYLON BOOM HEAD SHEAVE 5/8 ASSEMBLY

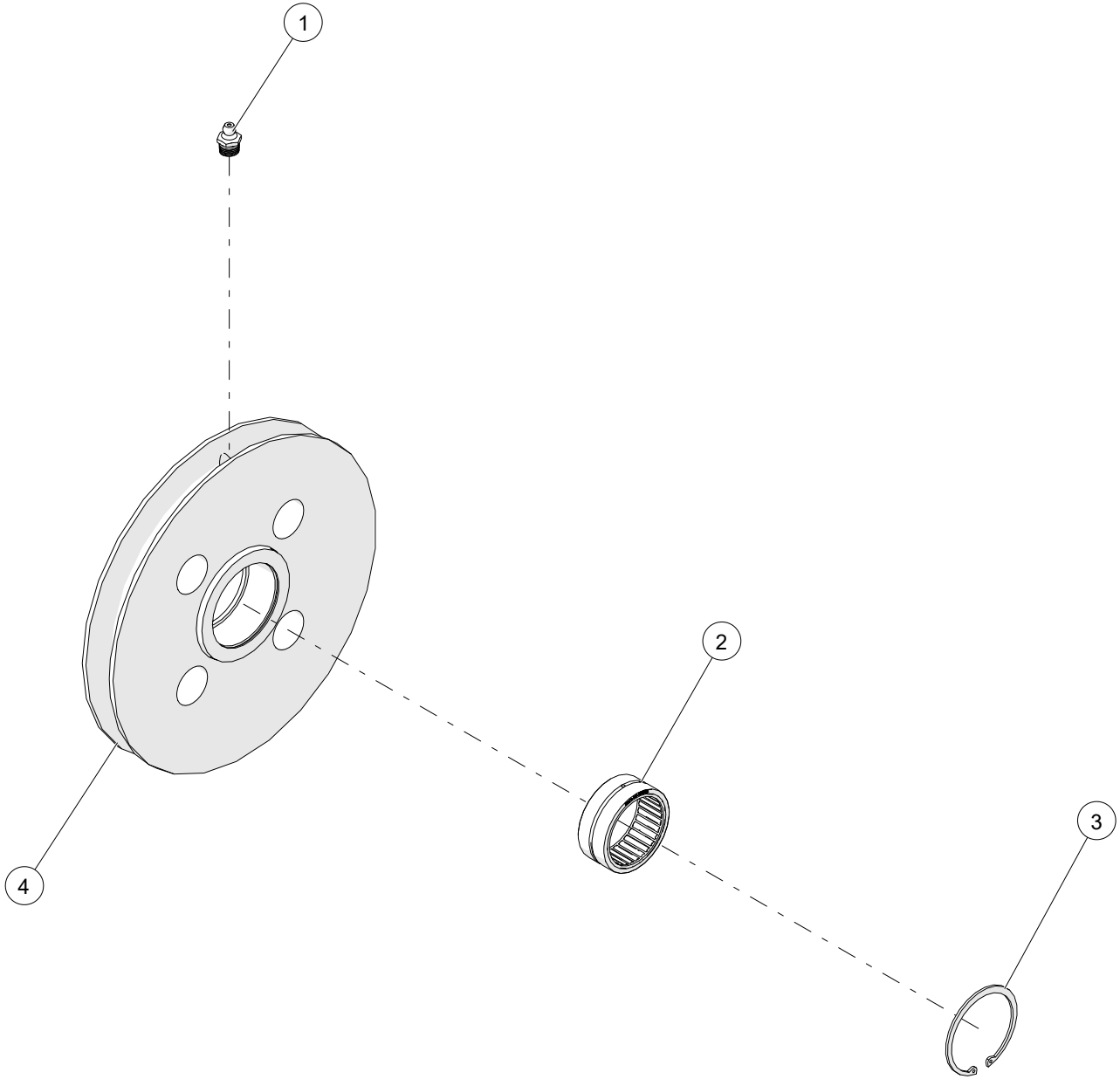

WHEN ORDERING PARTS, SPECIFY MODEL NUMBER, SERIAL NUMBER AND DESCRIPTION OF PARTS REQUIRED

NYLON BOOM HEAD SHEAVE 5/8 ASSEMBLY

ITEM	PART NUMBER	DESCRIPTION	QUANTITY	NOTES
	1035256	**NYLON BOOM HEAD SHEAVE 5/8 ASSEMBLY**		
1	1004435	GREASE ZERK, STR 1/8 PTF MALE	1	
2	1005430	HEAVY DUTY NEEDLE ROLLER BEARINGS	1	
3	RET2-XC75000M24Z0	INTERNAL RETAINING RING	1	
4	1035254	SHEAVE, BOOM HEAD NYLON 5/8	1	

WHEN ORDERING PARTS, SPECIFY MODEL NUMBER, SERIAL NUMBER AND DESCRIPTION OF PARTS REQUIRED

BOOM HEAD SHEAVE ASSEMBLY

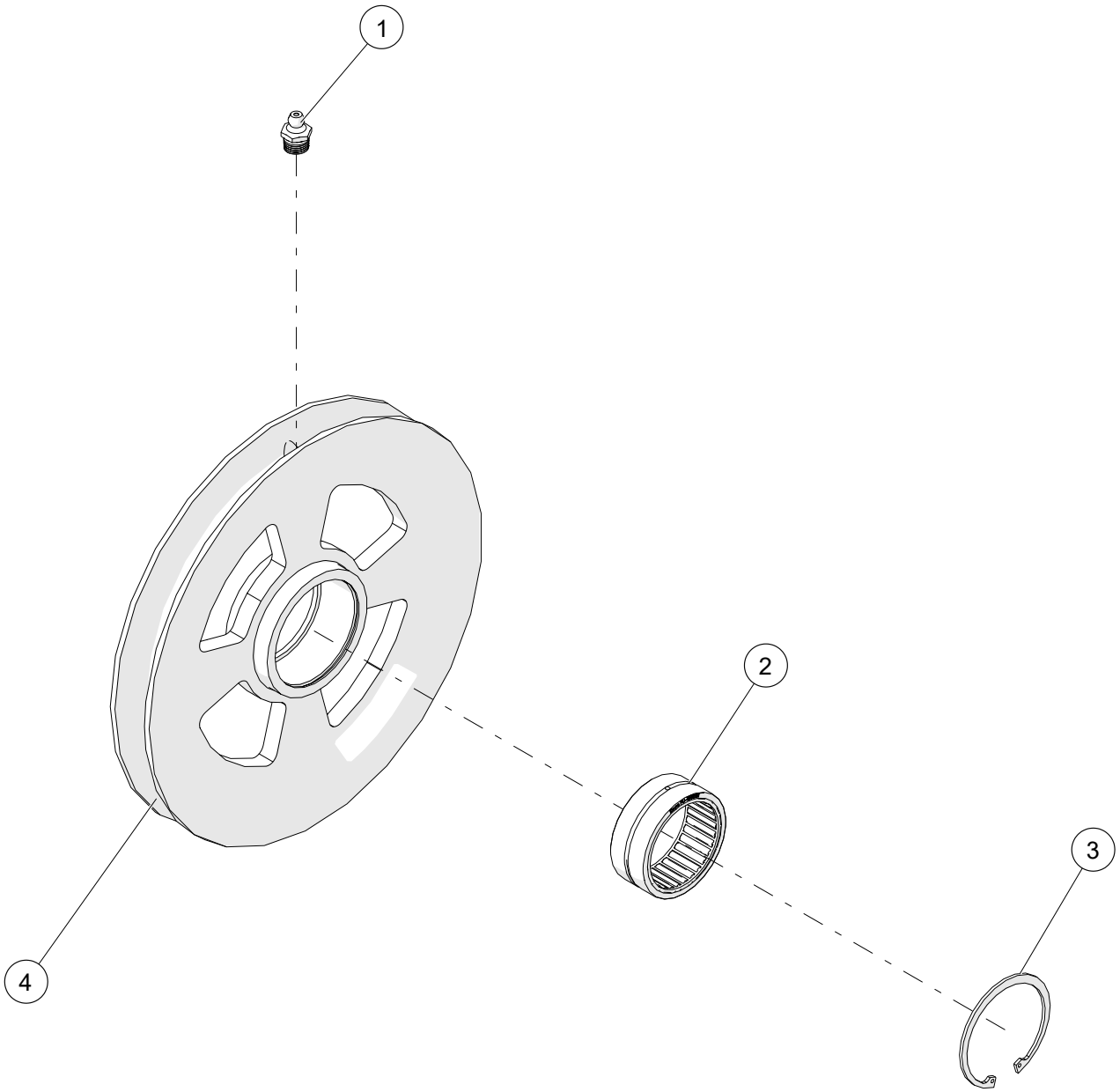

WHEN ORDERING PARTS, SPECIFY MODEL NUMBER, SERIAL NUMBER AND DESCRIPTION OF PARTS REQUIRED

BOOM HEAD SHEAVE ASSEMBLY

ITEM	PART NUMBER	DESCRIPTION	QUANTITY	NOTES
	1029874	**BOOM HEAD SHEAVE ASSEMBLY**		
1	1004435	GREASE ZERK, STR 1/8 PTF MALE	1	
2	1005430	ROLLER BEARING	1	
3	RET2-XC75000XZ0	RET2-XC75000XZ0	1	
4	1029873	GREASE ZERK, STR 1/8 PTF MALE	1	

WHEN ORDERING PARTS, SPECIFY MODEL NUMBER, SERIAL NUMBER AND DESCRIPTION OF PARTS REQUIRED

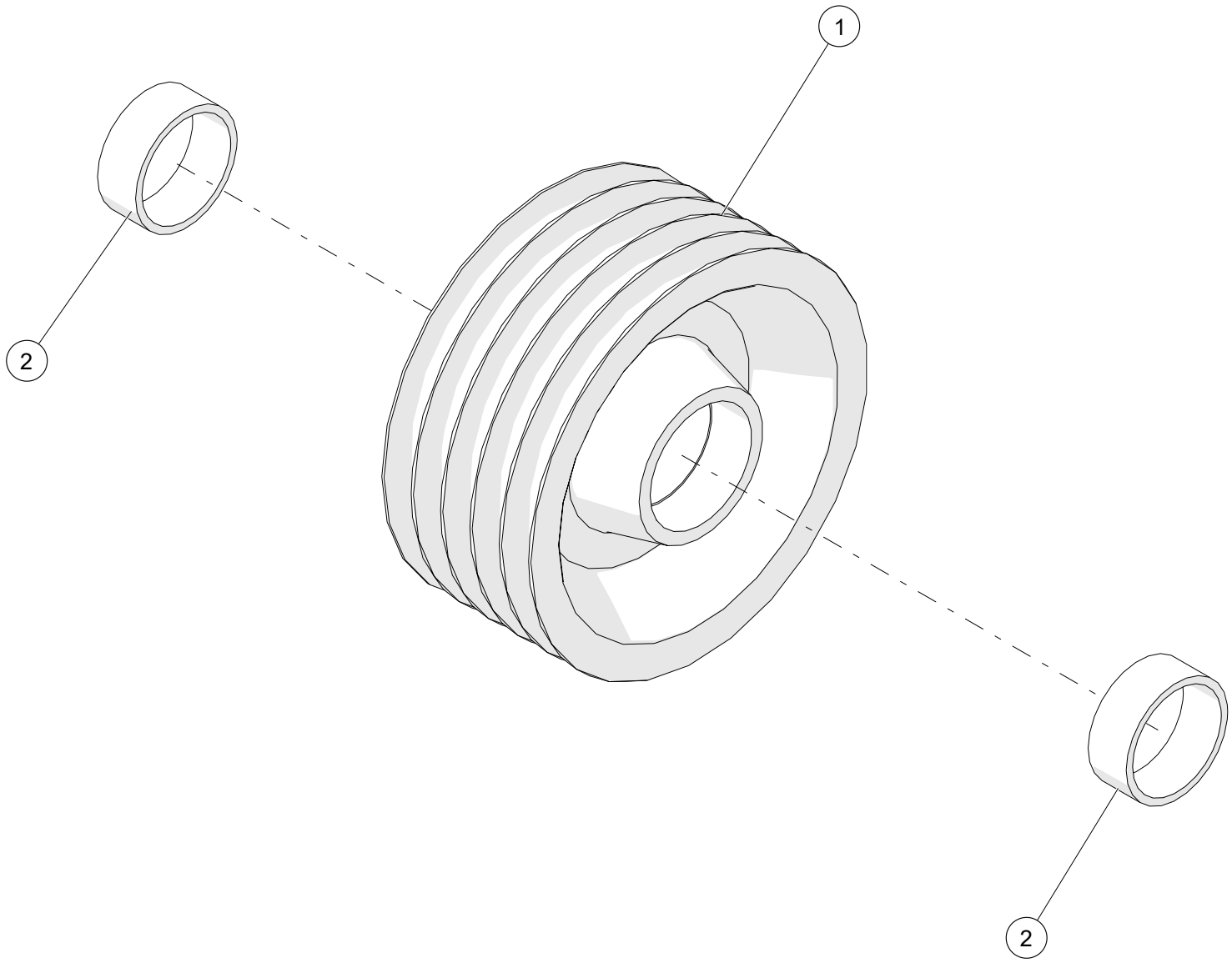

WHEN ORDERING PARTS, SPECIFY MODEL NUMBER, SERIAL NUMBER AND DESCRIPTION OF PARTS REQUIRED

WIRE ROPE SHEAVE ASSEMBLY

ITEM	PART NUMBER	DESCRIPTION	QUANTITY	NOTES
	1004394	**WIRE ROPE SHEAVE ASSEMBLY**		
1	1004395	SHEAVE, 7/8 WIRE ROPE	1	
2	1004396	BEARING, 3 1/2 SHAFT GREASELESS"	2	

WHEN ORDERING PARTS, SPECIFY MODEL NUMBER, SERIAL NUMBER AND DESCRIPTION OF PARTS REQUIRED

NON - ILLUSTRATED PAGE

ITEM	PART NUMBER	DESCRIPTION	QUANTITY	NOTES
	1035229	**50-155 M & 50-155 U COUNTERWEIGHT OPTIONS**		
1	**1034831**	10,000# COUNTERWEIGHT	1	SEE PAGE 91
2	**1034874**	4,500# COUNTERWEIGHT	1	SEE PAGE 105
3	**1035228**	UTILITY CRANE COUNTERWEIGHT	1	SEE PAGE 111
4	**1038065**	4,500# COUNTERWEIGHT W/O AUX WINCH	1	SEE PAGE 103
5	**1038068**	10,000# COUNTERWEIGHT INSTALLATION W/O AUX WINCH	1	SEE PAGE 114

WHEN ORDERING PARTS, SPECIFY MODEL NUMBER, SERIAL NUMBER AND DESCRIPTION OF PARTS REQUIRED

10,000# COUNTERWEIGHT W/AUX WINCH

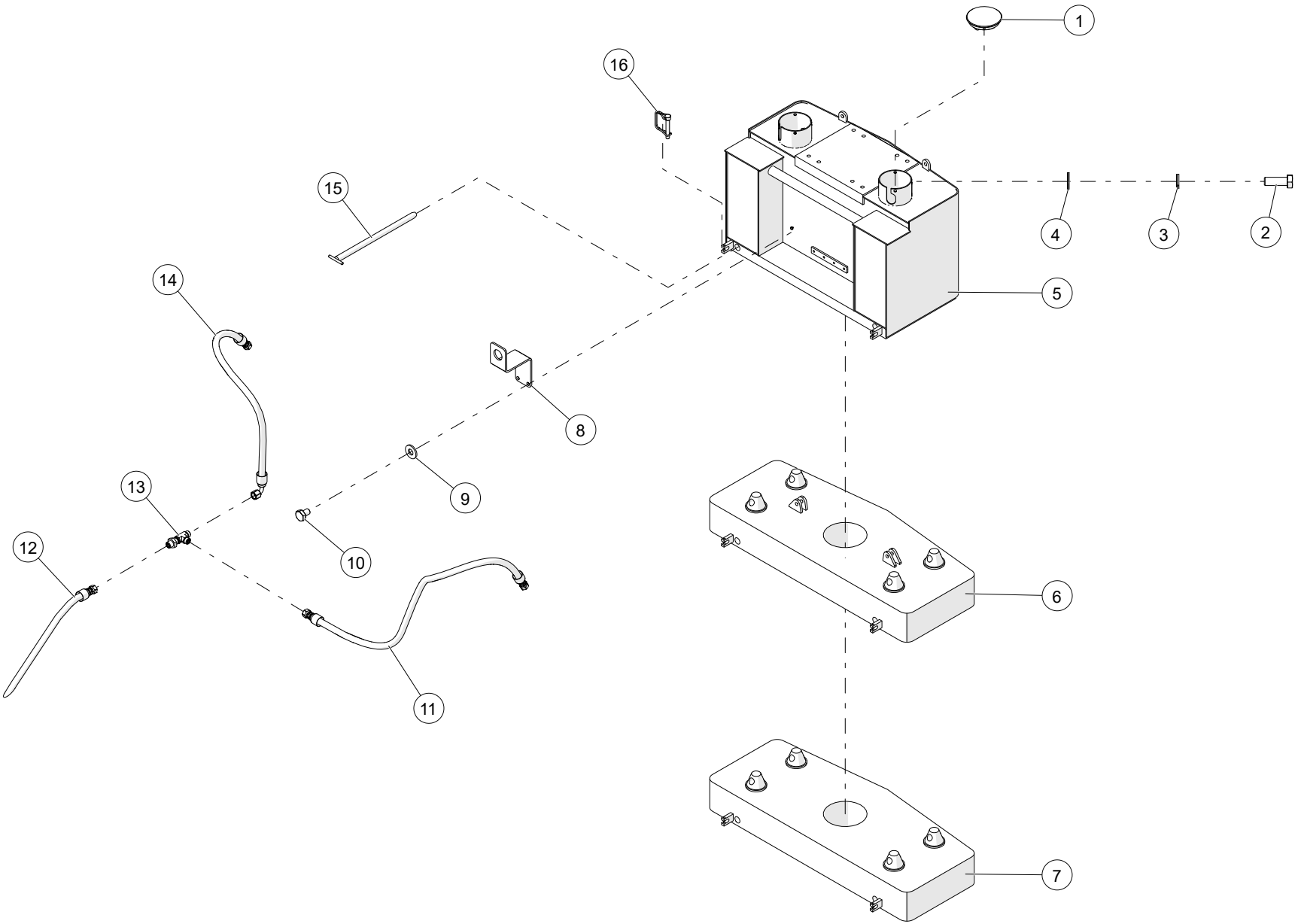

WHEN ORDERING PARTS, SPECIFY MODEL NUMBER, SERIAL NUMBER AND DESCRIPTION OF PARTS REQUIRED

10,000# COUNTERWEIGHT W/AUX WINCH

ITEM	PART NUMBER	DESCRIPTION	QUANTITY	NOTES
	1034831	**10,000# COUNTERWEIGHT W/AUX WINCH**		
1	1034782	WELDMENT, CAP	2	
2	HHCS-C500A378Z0	HEX HEAD CAP SCREW, 1/2-13 X 1 3/8 LEN, GR8, ZN	8	
3	WSH4-X5000008Z0	SPIRAL LOCK WASHER, 1/2, GR8, ZN	8	
4	WSH2-X5000008Z0	SAE WASHER, 1/2, GR8, ZN	8	
5	1034832	WELDMENT, 4500LB COUNTERWEIGHT	1	
6	1034842	WELDMENT, HEAVYWEIGHT SLAB TOP	1	
7	1034876	WELDMENT, HEAVYWEIGHT SLAB BOTTOM	1	
8	1026396	BULKHEAD T-BRACKET	1	
9	WSH2-X2500008Z0	SAE WASHER, 1/4, GR8, ZN	4	
10	HHCS-C2503758Z0	HEX HEAD CAP SCREW, 1/4-20 X 3/8 LEN, GR8, ZN	2	
11	1027933	HOSE,-6, 3000,FOFS-6SW/FOFS-6SW, 43.5	1	
12	1027886	HOSE, -6, 3000, FOFS-6SW / 90FOFS-6SW, 116.75	1	
13	1017985	TEE, MOFS-6BH/MOFS-6/MOFS-6	1	
14	1027936	HOSE, -6, 3000, 90FOFS-6SW/FOFS-6SW,33.0	1	
15	1034810	PIN, COUNTERWEIGHT WELD	4	
16	PIN7-X375A87XZ0	LOCK PIN WITH SQUARE RETAINER, 3/8 DIA X 1 7/8 LEN, ZINC	4	

WHEN ORDERING PARTS, SPECIFY MODEL NUMBER, SERIAL NUMBER AND DESCRIPTION OF PARTS REQUIRED

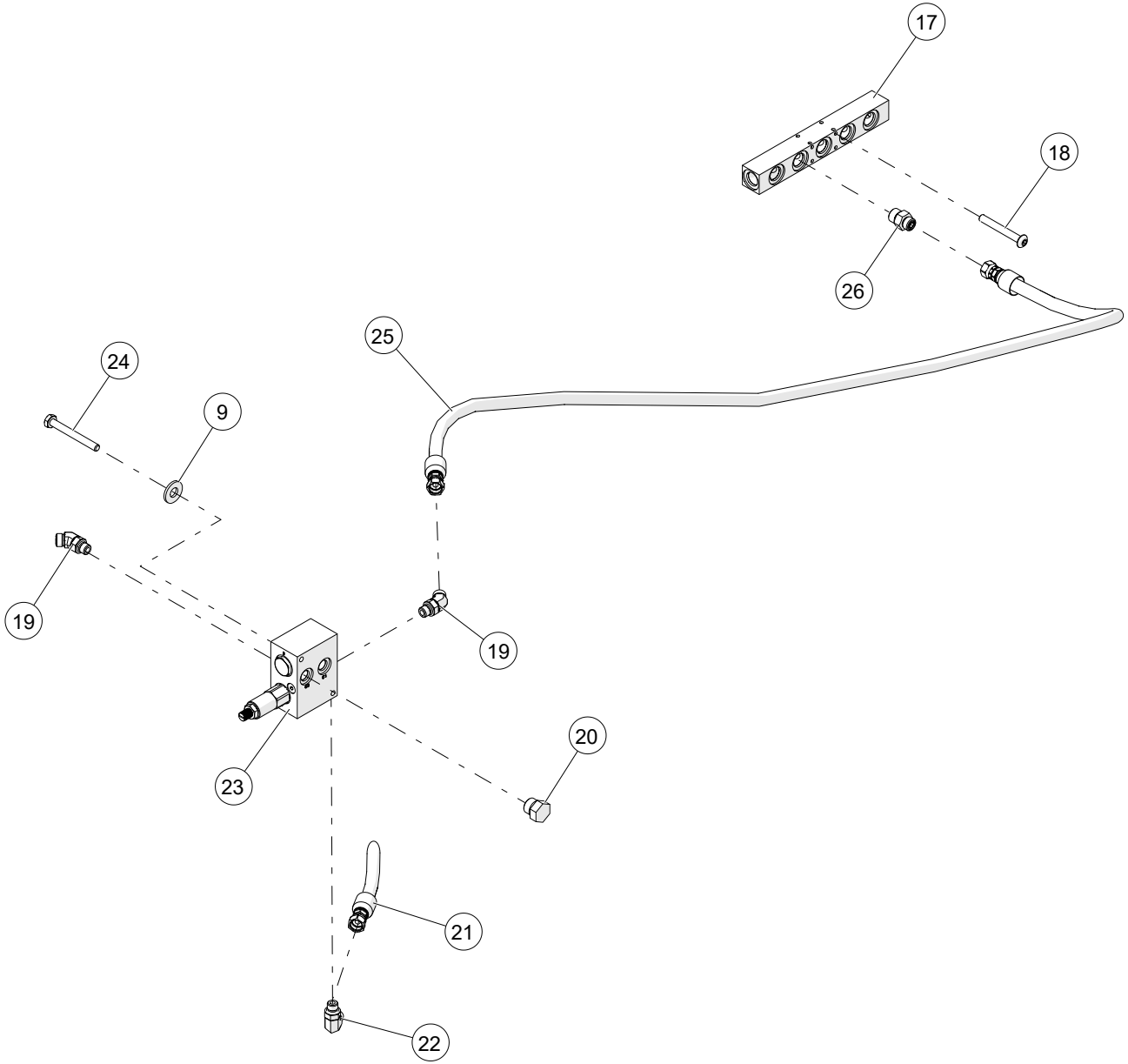

WHEN ORDERING PARTS, SPECIFY MODEL NUMBER, SERIAL NUMBER AND DESCRIPTION OF PARTS REQUIRED

10,000# COUNTERWEIGHT W/AUX WINCH

ITEM	PART NUMBER	DESCRIPTION	QUANTITY	NOTES
	1034831	**10,000# COUNTERWEIGHT W/AUX WINCH**		
17	T132014	MANIFOLD	1	
18	1027289	CAP SCREW, 10-24 X 40, ZINC	4	
19	1016188	ELBOW, 45, MOFS-6/MORB-6	3	
20	1019667	PLUG, HEX, ORB-6	2	
21	1027889	HOSE, -6, 3000, FOFS-6SW / 90FOFS-6SW, 106.0	1	
22	1014001	ELBOW, 90, MOFS-6/MORB-6	5	
23	1008279	C'WGT FLOW DIVIDER, 80160	1	
24	HHCS-C250B258Z0	HEX HEAD CAP SCREW, 1/4-20 X 2 1/4 LEN, GR8, ZN	2	
25	1027887	HOSE, -6, 300, FOFS-6SW/FOFS-6SW, 85.0	1	
26	1010073	ADAPTER, MOFS-6/MORB-8	1	

WHEN ORDERING PARTS, SPECIFY MODEL NUMBER, SERIAL NUMBER AND DESCRIPTION OF PARTS REQUIRED

10,000# COUNTERWEIGHT W/AUX WINCH

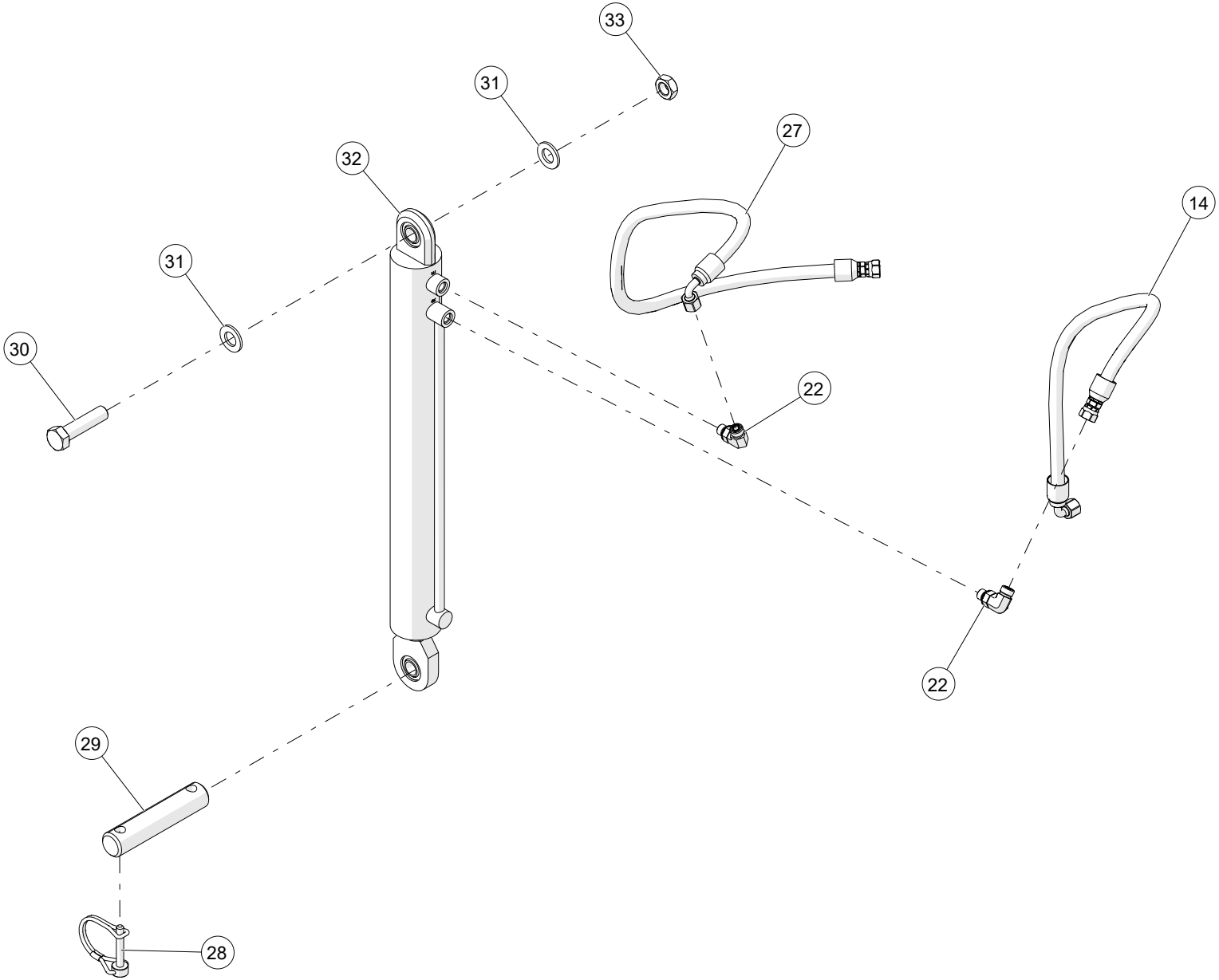

WHEN ORDERING PARTS, SPECIFY MODEL NUMBER, SERIAL NUMBER AND DESCRIPTION OF PARTS REQUIRED

10,000# COUNTERWEIGHT W/AUX WINCH

ITEM	PART NUMBER	DESCRIPTION	QUANTITY	NOTES
	1034831	**10,000# COUNTERWEIGHT W/AUX WINCH**		
27	1027935	HOSE, -6, 3000, 90FOFS-6SW/FOFS-6SW, 39.0	1	
28	PIN4-X250A12XZ0	LOCK PIN WITH ROUNDED RETAINER, 1/4 DIA X 1 1/8 LEN, ZINC	4	
29	1034937	PIN, COUNTERWEIGHT REMOVAL	2	
30	HHCS-F750C008M0	HEX HEAD CAP SCREW, 3/4-16 X 3 LEN, GR8, MA	2	
31	WSH2-X7500008Z0	SAE WASHER, 3/4, GR8, ZN	28	
32	1034844	CYLINDER, COUNTERWEIGHT REMOVAL	2	
33	NUT2-C7500008M0	HEX JAM NUT, 3/4-10, GR8, MA	2	

WHEN ORDERING PARTS, SPECIFY MODEL NUMBER, SERIAL NUMBER AND DESCRIPTION OF PARTS REQUIRED

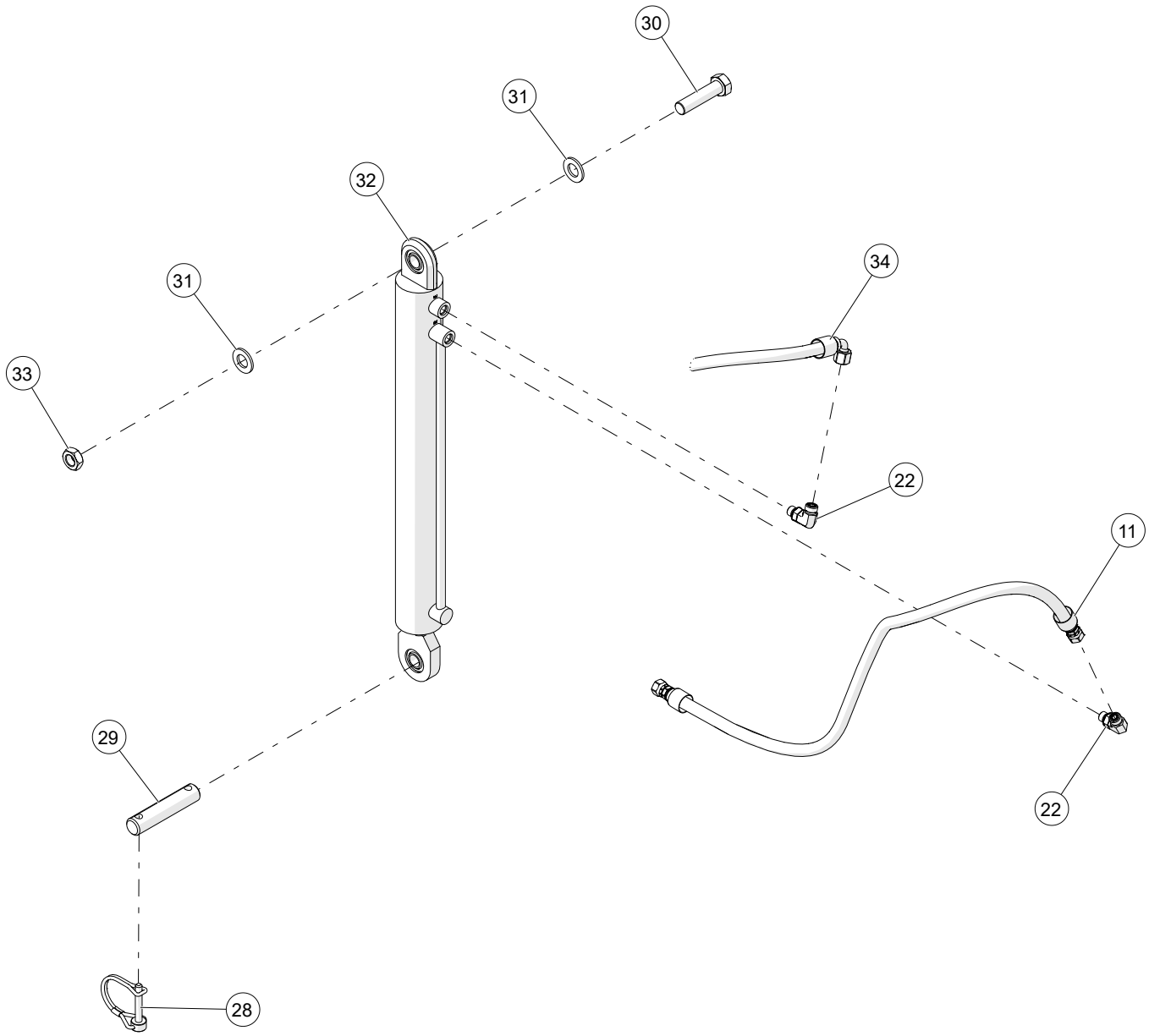

WHEN ORDERING PARTS, SPECIFY MODEL NUMBER, SERIAL NUMBER AND DESCRIPTION OF PARTS REQUIRED

10,000# COUNTERWEIGHT W/AUX WINCH

ITEM	PART NUMBER	DESCRIPTION	QUANTITY	NOTES
	1034831	**10,000# COUNTERWEIGHT W/AUX WINCH**		
34	1027934	HOSE, -6,3000, 90FOFS-6SW/FOFS-6SW, 45.5	1	

WHEN ORDERING PARTS, SPECIFY MODEL NUMBER, SERIAL NUMBER AND DESCRIPTION OF PARTS REQUIRED

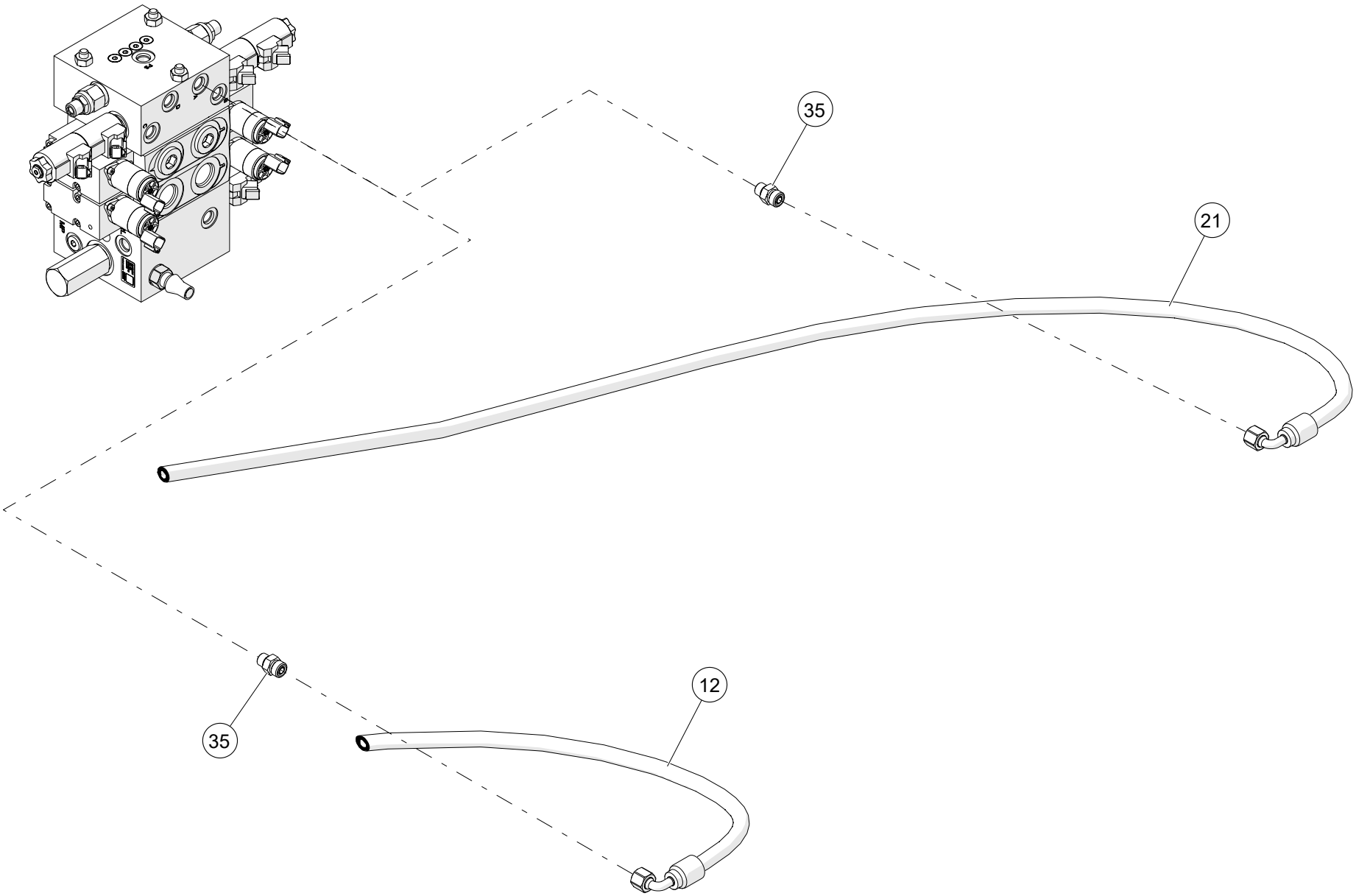

WHEN ORDERING PARTS, SPECIFY MODEL NUMBER, SERIAL NUMBER AND DESCRIPTION OF PARTS REQUIRED

10,000# COUNTERWEIGHT W/AUX WINCH

ITEM	PART NUMBER	DESCRIPTION	QUANTITY	NOTES
	1034831	**10,000# COUNTERWEIGHT W/AUX WINCH**		
35	1010071	ADAPTER, MOFS-6/MORB-6	2	

WHEN ORDERING PARTS, SPECIFY MODEL NUMBER, SERIAL NUMBER AND DESCRIPTION OF PARTS REQUIRED

10,000# COUNTERWEIGHT W/AUX WINCH

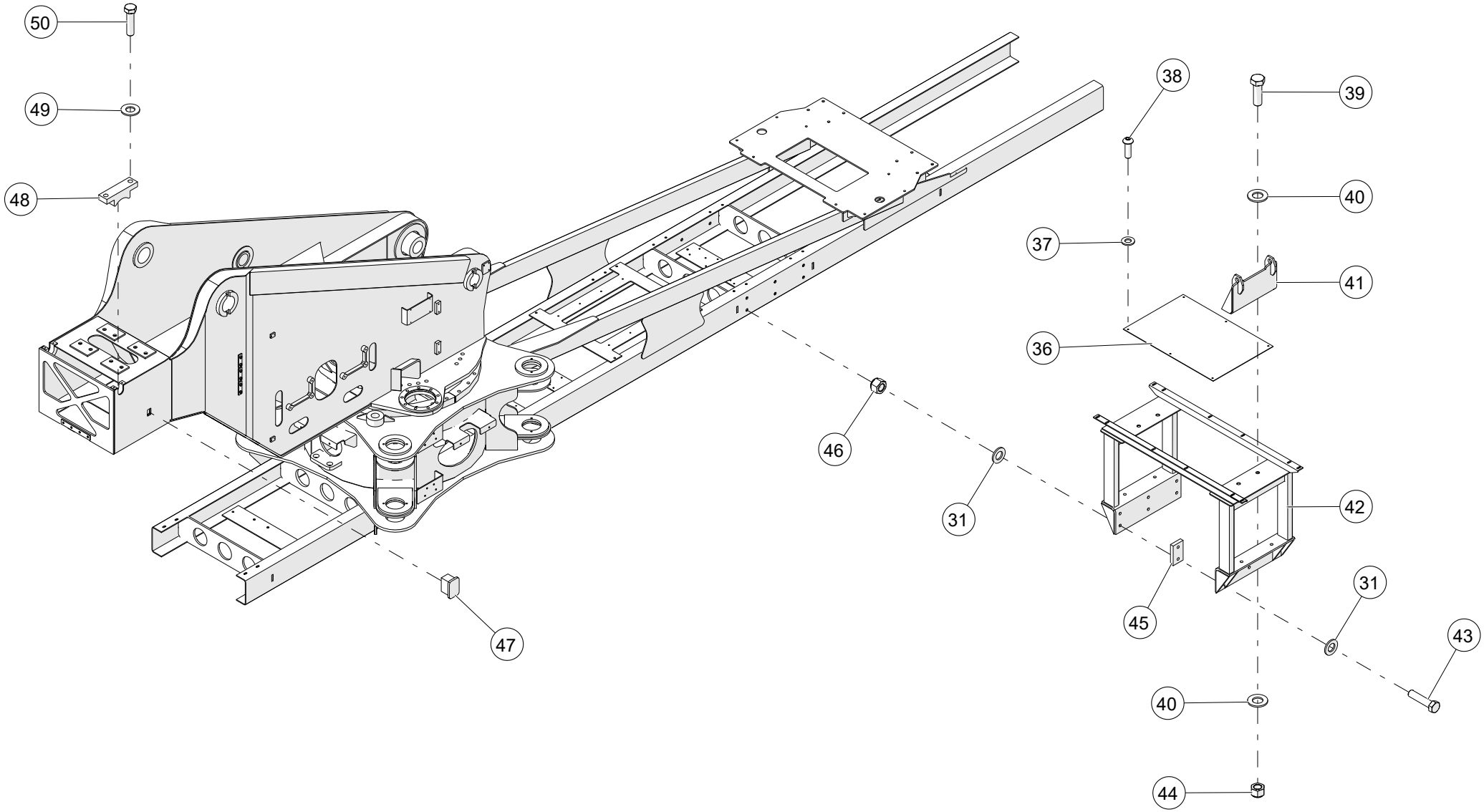

WHEN ORDERING PARTS, SPECIFY MODEL NUMBER, SERIAL NUMBER AND DESCRIPTION OF PARTS REQUIRED

10,000# COUNTERWEIGHT W/AUX WINCH

ITEM	PART NUMBER	DESCRIPTION	QUANTITY	NOTES
	1034831	**10,000# COUNTERWEIGHT W/AUX WINCH**		
36	T113212	PANEL ASSY, COVER- CTWT	1	
37	WSH2-X3130008Z0	SAE WASHER, 5/16, GR8, ZN	6	
38	SH03-C313A00BB0	SHCS BUTTON HEAD, 5/16-18 X 1 LEN, BO	6	
39	HHCS-C875B758M0	HEX HEAD CAP SCREW, 7/8-9 X 2 3/4 LEN, GR8, MA	4	
40	WSH2-X8750008Z0	SAE WASHER, 7/8, GR8, ZN	8	
41	1029862	CTWT MOUNT	2	
42	1034799	WELDMENT, COUNTERWEIGHT RACK	1	
43	HHCS-C750C258R0	HEX HEAD CAP SCREW, 3/4-10 X 3 1/4 LEN, GR8, NF	12	
44	NUT3-C8750008M0	NYLON LOCK NUT, 7/8-9, GR8, MA	4	
45	T117460	SPACER, COUNTERWEIGHT RACK MOUNTING	6	
46	NUT3-C7500008Z0	NYLON LOCK NUT, 3/4-10, GR8, ZN	12	
47	1223-1013	COUNTERWEIGHT REMOVAL SWITCH	1	
48	1039315	PLATE, TOP STOP	2	
49	WSH2-X3750008Z0	SAE WASHER, 3/8, GR8, ZN	4	
50	HHCS-C375A508Z0	HEX HEAD CAP SCREW, 3/8-16 X 1 1/2 LEN, GR8, ZN	4	

WHEN ORDERING PARTS, SPECIFY MODEL NUMBER, SERIAL NUMBER AND DESCRIPTION OF PARTS REQUIRED

4,500# COUNTERWEIGHT W/O AUX WINCH

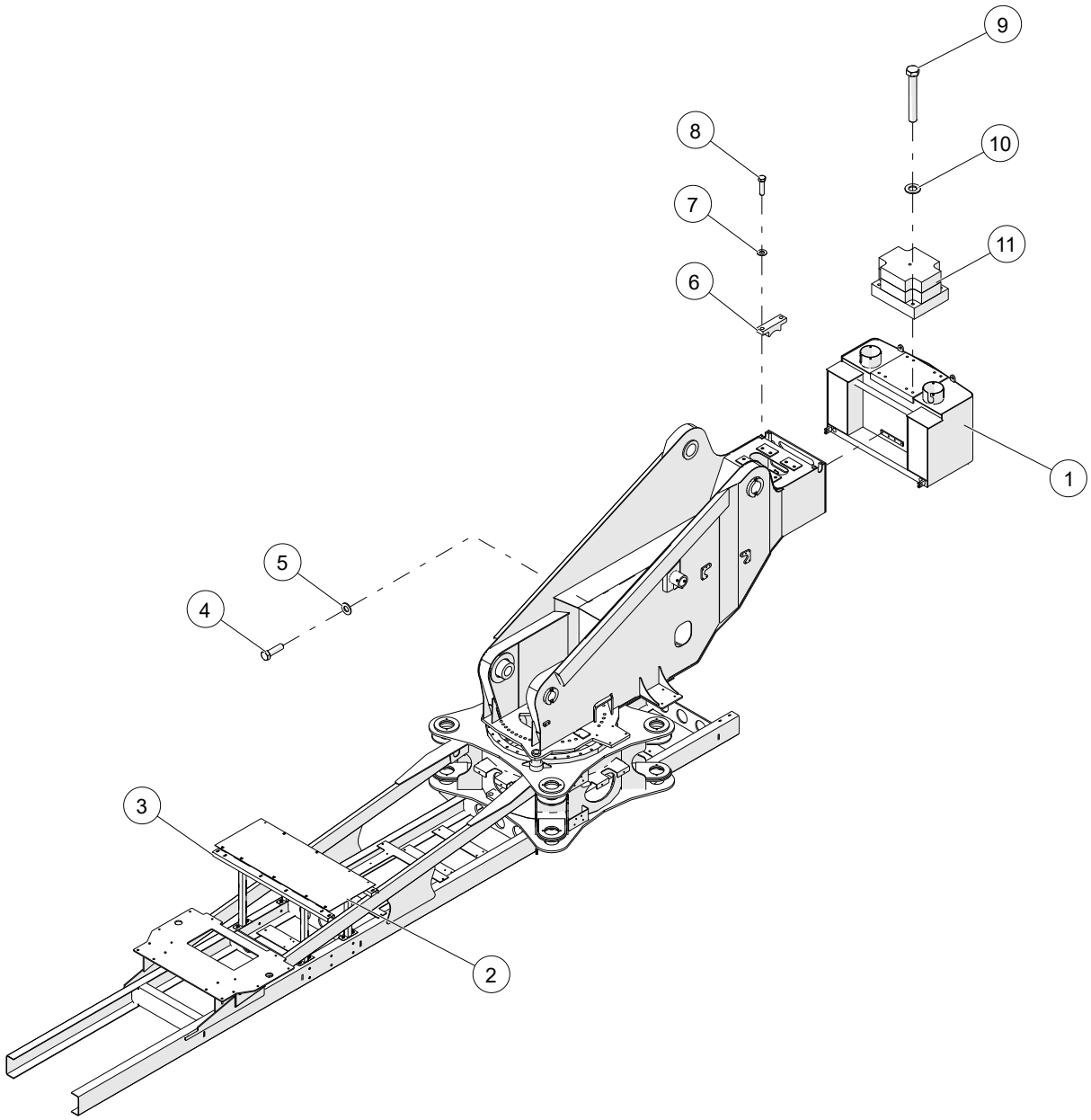

WHEN ORDERING PARTS, SPECIFY MODEL NUMBER, SERIAL NUMBER AND DESCRIPTION OF PARTS REQUIRED

4,500# COUNTERWEIGHT W/O AUX WINCH

ITEM	PART NUMBER	DESCRIPTION	QUANTITY	NOTES
	1038065	**4,500# COUNTERWEIGHT W/O AUX WINCH**		
1	1034832	WELDMENT, 4500LB COUNTERWEIGHT	1	
2	**1034943**	PANEL ASSY, COVER- CTWT	1	SEE PAGE 107
3	1034863	WELDMENT, DECKING NON-HL	2	
4	HHCS-C500A758Z0	HEX HEAD CAP SCREW, 1/2-13 X 1 3/4 LEN, GR8, ZN	4	
5	WSH2-X8750008Z0	SAE WASHER, 7/8, GR8, ZN	4	
6	1039315	PLATE, TOP STOP	2	
7	WSH2-X3750008Z0	SAE WASHER, 3/8, GR8, ZN	4	
8	HHCS-C375A508Z0	HEX HEAD CAP SCREW, 3/8-16 X 1 1/2 LEN, GR8, ZN	4	
9	HHCS-C875F508M0	HEX HEAD CAP SCREW, 7/8-9 X 6 1/2 LEN, GR8, MA	4	
10	WSH2-X5000008Z0	SAE WASHER, 1/2, GR8, ZN	4	
11	1037712	SLAB WELDMENT	1	

WHEN ORDERING PARTS, SPECIFY MODEL NUMBER, SERIAL NUMBER AND DESCRIPTION OF PARTS REQUIRED

4,500# COUNTERWEIGHT

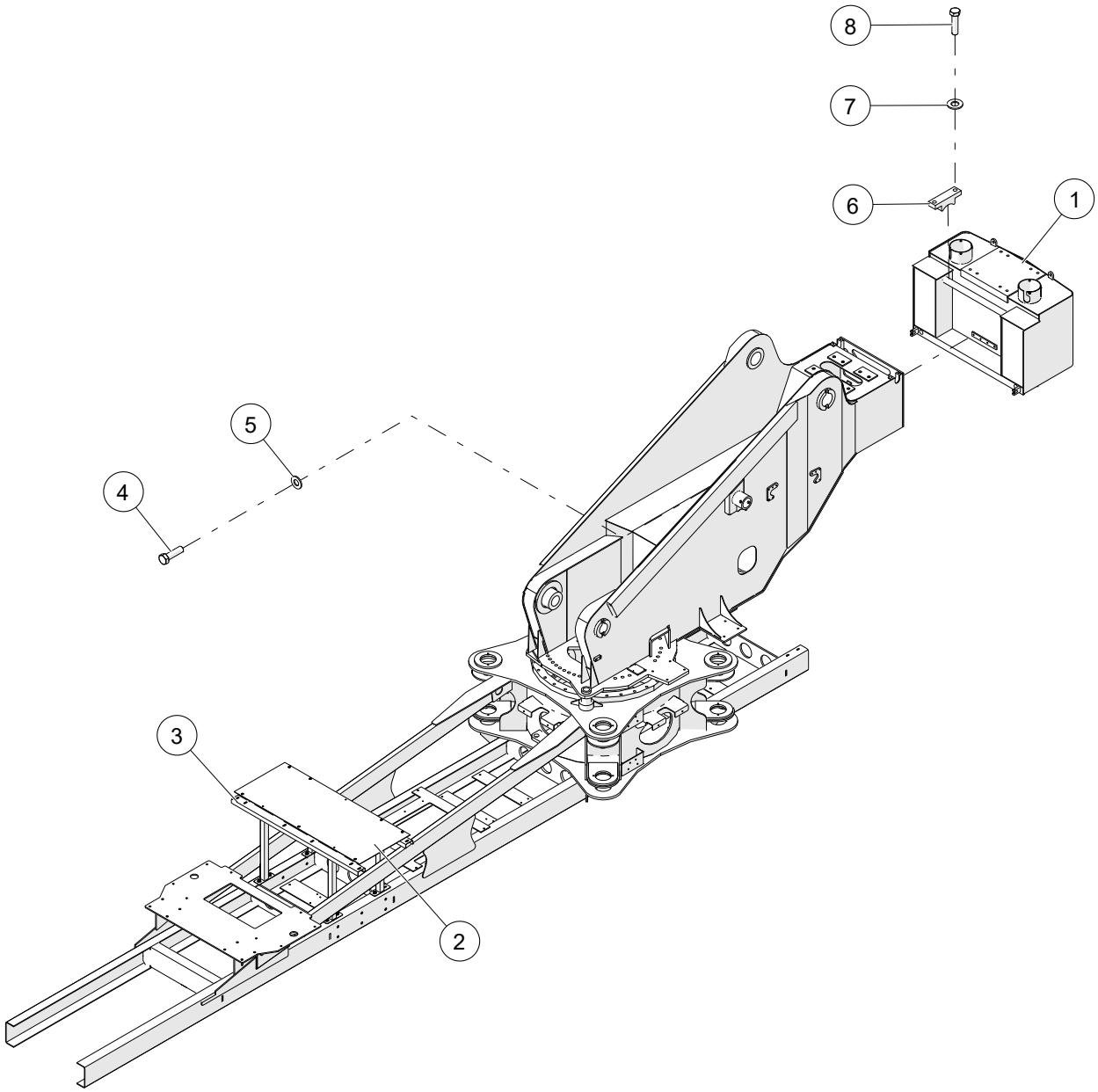

WHEN ORDERING PARTS, SPECIFY MODEL NUMBER, SERIAL NUMBER AND DESCRIPTION OF PARTS REQUIRED

4,500# COUNTERWEIGHT

ITEM	PART NUMBER	DESCRIPTION	QUANTITY	NOTES
	1034874	**4,500# COUNTERWEIGHT**		
1	1034832	WELDMENT, 4500LB COUNTERWEIGHT	1	
2	**1034943**	PANEL ASSY, COVER- CTWT	1	SEE PAGE 107
3	**1034863**	WELDMENT, DECKING NON-HL	2	SEE PAGE 109
4	HHCS-C500A758Z0	HEX HEAD CAP SCREW, 1/2-13 X 1 3/4 LEN, GR8, ZN	4	
5	WSH2-X5000008Z0	SAE WASHER, 1/2, GR8, ZN	16	
6	1039315	PLATE, TOP STOP	2	
7	WSH2-X3750008Z0	SAE WASHER, 3/8, GR8, ZN	4	
8	HHCS-C375A508Z0	HEX HEAD CAP SCREW, 3/8-16 X 1 1/2 LEN, GR8, ZN	4	

WHEN ORDERING PARTS, SPECIFY MODEL NUMBER, SERIAL NUMBER AND DESCRIPTION OF PARTS REQUIRED

PANEL ASSY, COVER- CTWT

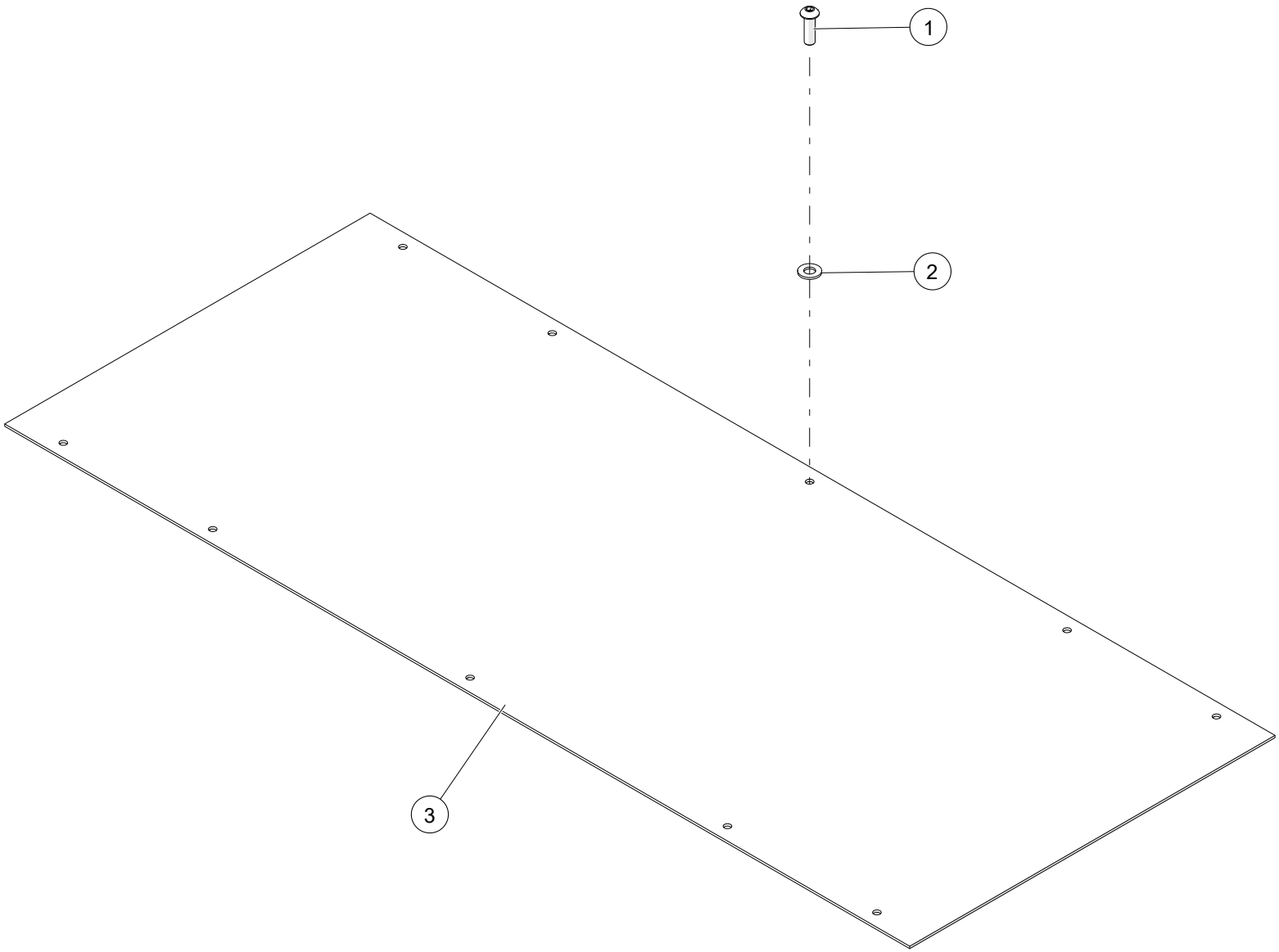

WHEN ORDERING PARTS, SPECIFY MODEL NUMBER, SERIAL NUMBER AND DESCRIPTION OF PARTS REQUIRED

PANEL ASSY, COVER- CTWT

ITEM	PART NUMBER	DESCRIPTION	QUANTITY	NOTES
	1034943	**PANEL ASSY, COVER- CTWT**		
1	SH03-F313A00BB0	SHCS BUTTON HEAD, 5/16-24 X 1 LEN, BO	10	
2	WSH2-X3130008Z0	SAE WASHER, 5/16, GR8, ZN	10	
3	**1034943**	PANEL ASSY, COVER- CTWT	1	SEE PAGE 107

WHEN ORDERING PARTS, SPECIFY MODEL NUMBER, SERIAL NUMBER AND DESCRIPTION OF PARTS REQUIRED

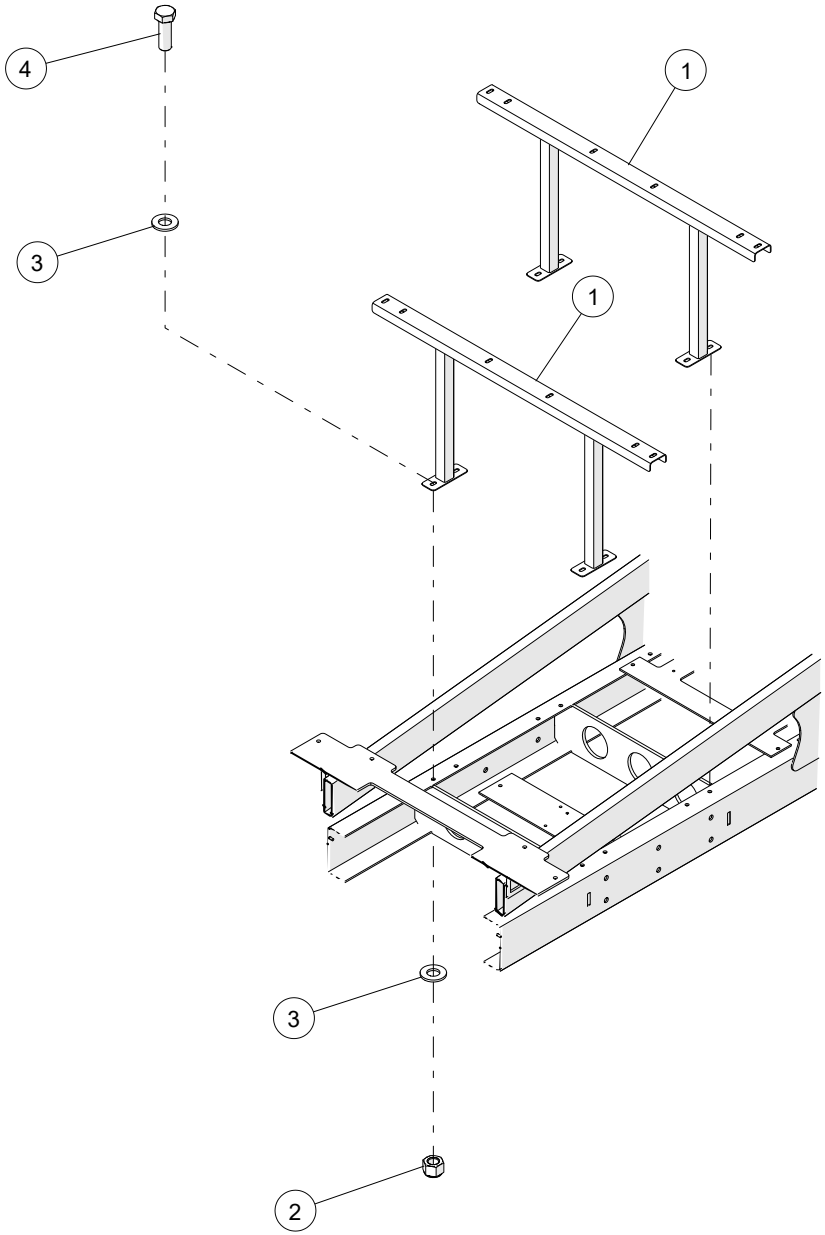

WHEN ORDERING PARTS, SPECIFY MODEL NUMBER, SERIAL NUMBER AND DESCRIPTION OF PARTS REQUIRED

WELDMENT, DECKING NON-HL

ITEM	PART NUMBER	DESCRIPTION	QUANTITY	NOTES
	1034863	**WELDMENT, DECKING NON-HL**		
1	**1034863**	WELDMENT, DECKING NON-HL	2	SEE PAGES 109
2	NUT3-C5000008Z0	NYLON LOCK NUT, 1/2-13, GR8, ZN	8	
3	WSH2-X5000008Z0	SAE WASHER, 1/2, GR8, ZN	16	
4	HHCS-C500A508Z0	HEX HEAD CAP SCREW, 1/2-13 X 1 1/2 LEN, GR8, ZN	8	

WHEN ORDERING PARTS, SPECIFY MODEL NUMBER, SERIAL NUMBER AND DESCRIPTION OF PARTS REQUIRED

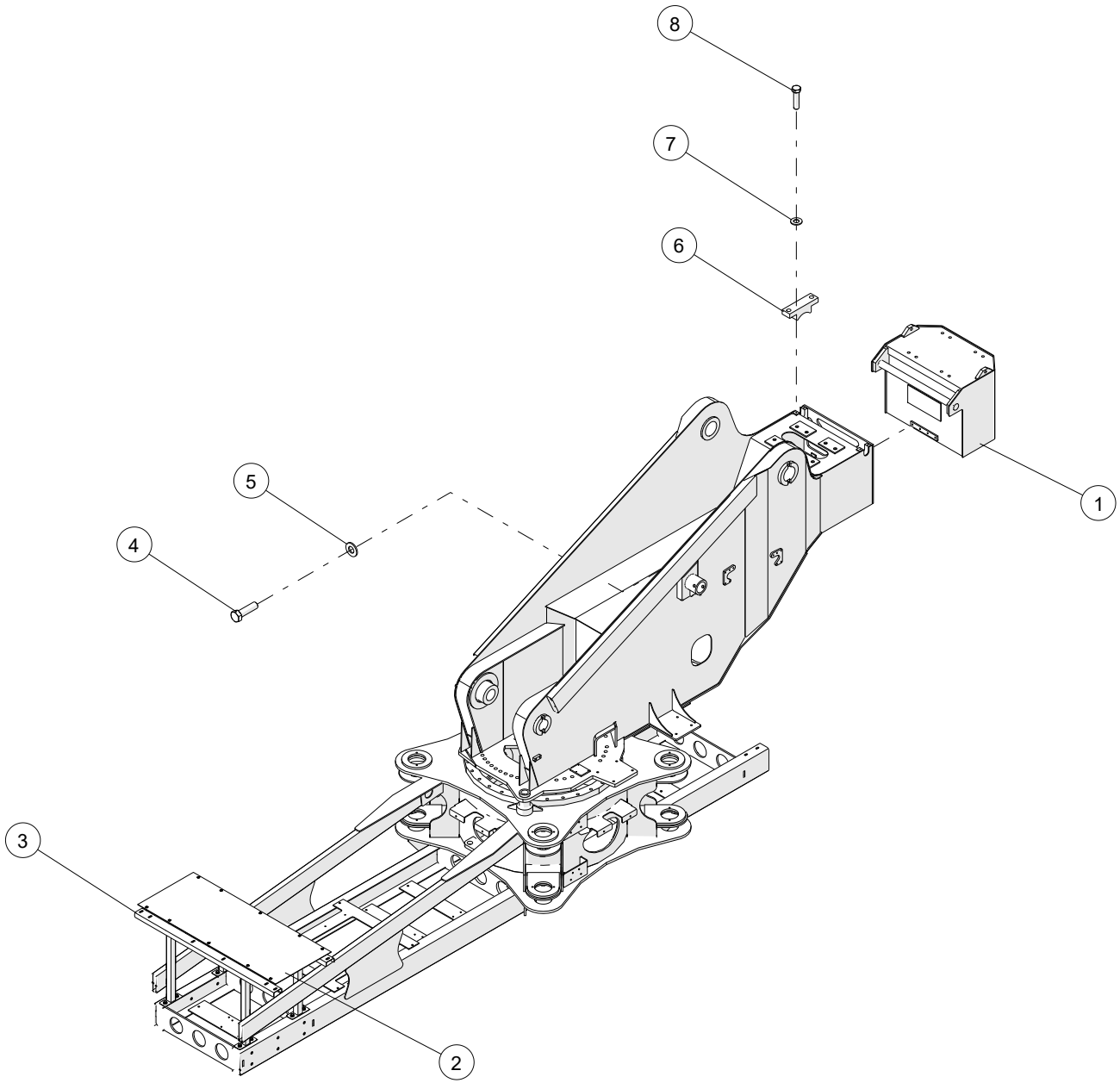

WHEN ORDERING PARTS, SPECIFY MODEL NUMBER, SERIAL NUMBER AND DESCRIPTION OF PARTS REQUIRED

UTILITY CRANE COUNTERWEIGHT

ITEM	PART NUMBER	DESCRIPTION	QUANTITY	NOTES
	1035228	**UTILITY CRANE COUNTERWEIGHT**		
1	1039308	WELDMENT, 1500 LB COUNTERWEIGHT	1	
2	**1034943**	PANEL ASSY, COVER- CTWT	1	SEE PAGES 107
3	**1034863**	WELDMENT, DECKING NON-HL	2	SEE PAGES 109
4	HHCS-C500A758Z0	HEX HEAD CAP SCREW, 1/2-13 X 1 3/4 LEN, GR8, ZN	4	
5	WSH2-X5000008Z0	SAE WASHER, 1/2, GR8, ZN	4	
6	1039315	PLATE, TOP STOP	2	
7	WSH2-X3750008Z0	AE WASHER, 3/8, GR8, ZN	4	
8	HHCS-C375A508Z0	HEX HEAD CAP SCREW, 3/8-16 X 1 1/2 LEN, GR8, ZN	4	

WHEN ORDERING PARTS, SPECIFY MODEL NUMBER, SERIAL NUMBER AND DESCRIPTION OF PARTS REQUIRED

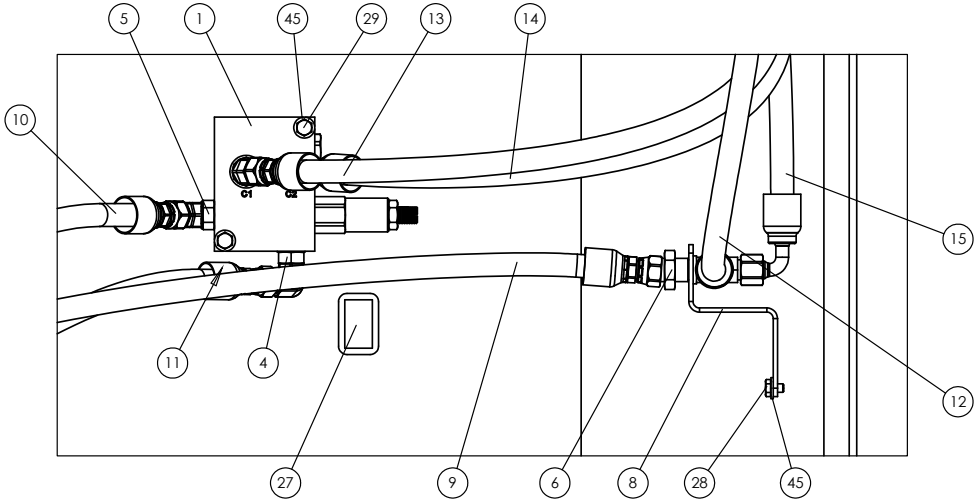

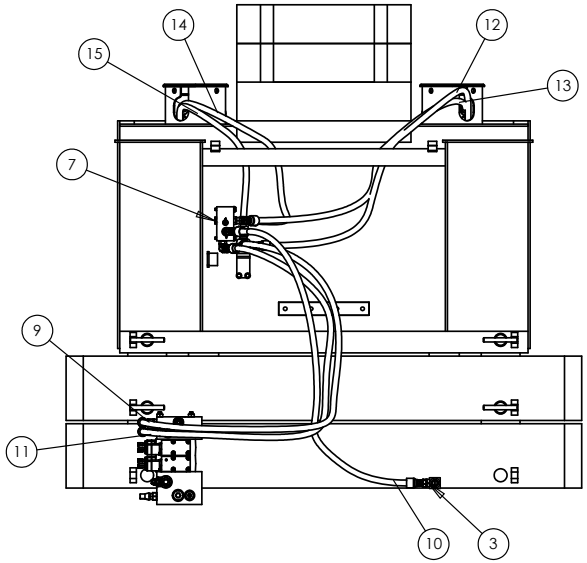

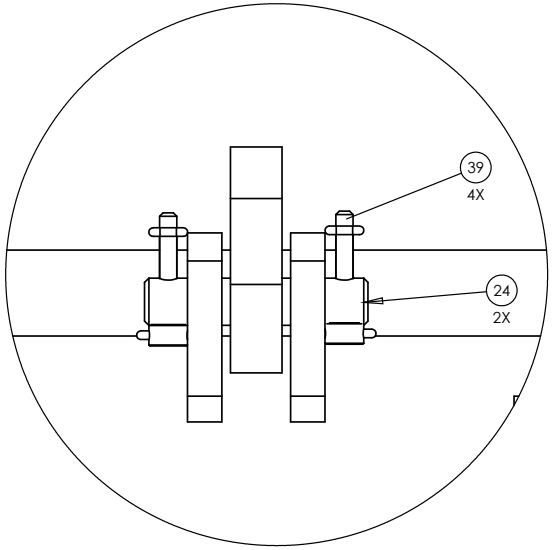

DETAIL A

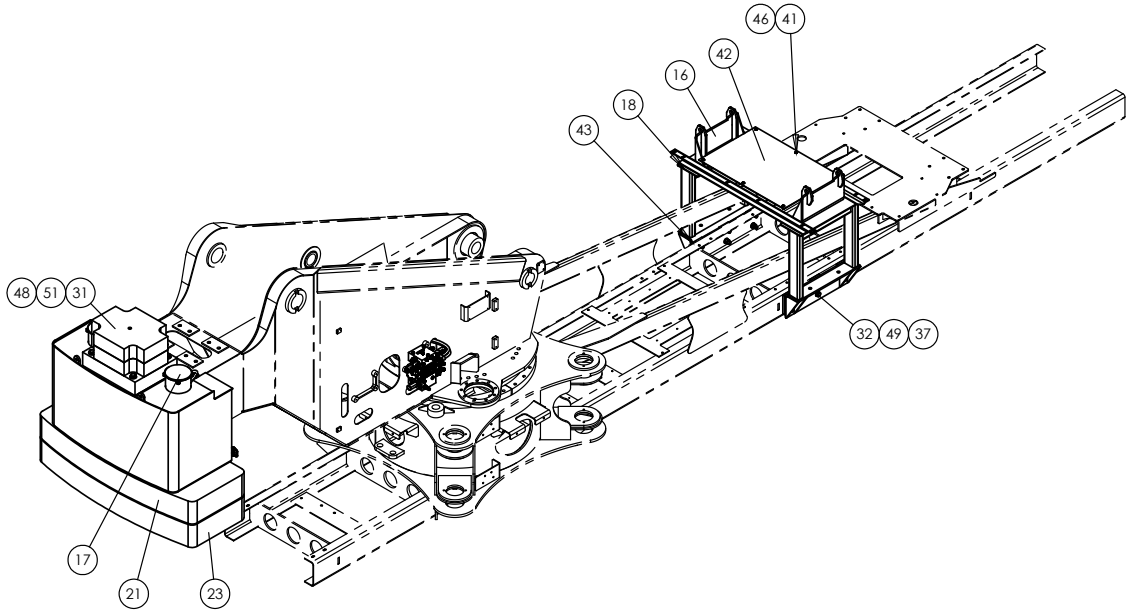

WHEN ORDERING PARTS, SPECIFY MODEL NUMBER, SERIAL NUMBER AND DESCRIPTION OF PARTS REQUIRED

HEAVYLIFT INSTALLATION W/O AUX WINCH

ITEM	PART NUMBER	DESCRIPTION	QUANTITY	NOTES
	1038068	**HEAVYLIFT INSTALLATION W/O AUX WINCH**		
1	1008279	C'WGT FLOW DIVIDER, 80160	1	
2	1010071	ADAPTER, MOFS-6/MORB-6	2	
3	1010073	ADAPTER, MOFS-6/MORB-8	1	
4	1014001	ELBOW, 90, MOFS-6/MORB-6	5	
5	1016188	ELBOW, 45, MOFS-6/MORB-6	3	
6	1017985	TEE, MOFS-6BH/MOFS-6/MOFS-6	1	
7	1019667	PLUG, HEX, ORB-6	2	
8	1026396	BULKHEAD T-BRACKET	1	
9	1027886	HOSE, -6, 3000, FOFS-6SW / 90FOFS-6SW, 116.75	1	
10	1027887	HOSE,-6,300, FOFS-6SW/FOFS-6SW, 85.0	1	
11	1027889	HOSE, -6, 3000, FOFS-6SW / 90FOFS-6SW, 106.0	1	
12	1027933	HOSE, -6, 3000, FOFS-6SW/FOFS-6SW, 43.5	1	
13	1027934	HOSE, -6, 3000, 90FOFS-6SW/FOFS-6SW, 45.5	1	
14	1027935	HOSE, -6, 3000, 90FOFS-6SW/FOFS-6SW, 39.0	1	
15	1027936	HOSE, -6, 3000, 90FOFS-6SW/FOFS-6SW, 33.0	1	
16	1029862	CTWT MOUNT	2	
17	1034782	WELDMENT, CAP	3	

WHEN ORDERING PARTS, SPECIFY MODEL NUMBER, SERIAL NUMBER AND DESCRIPTION OF PARTS REQUIRED

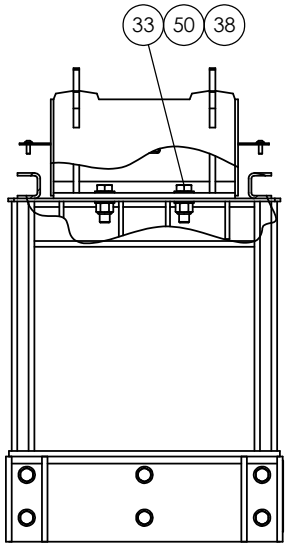

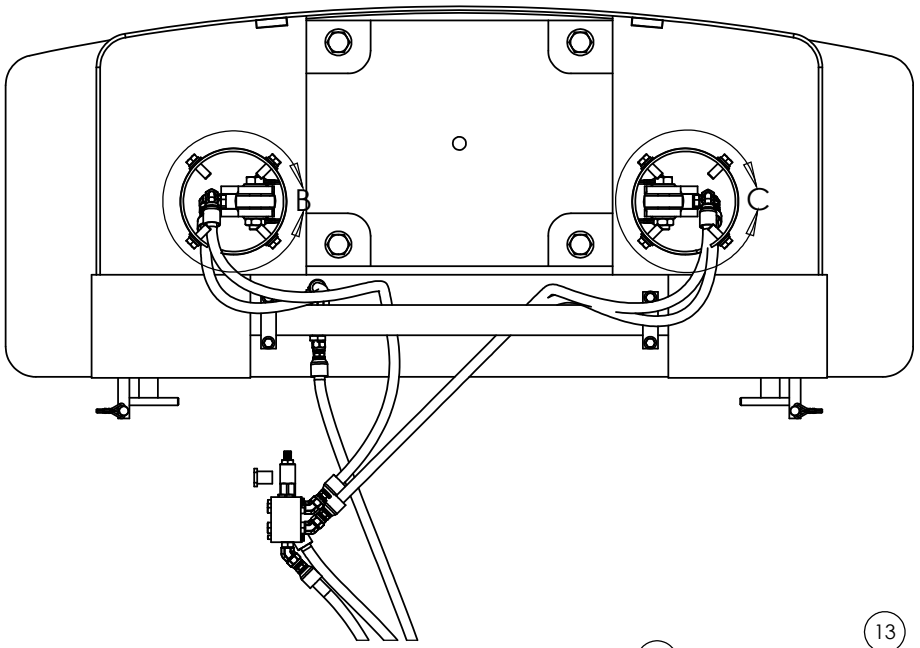

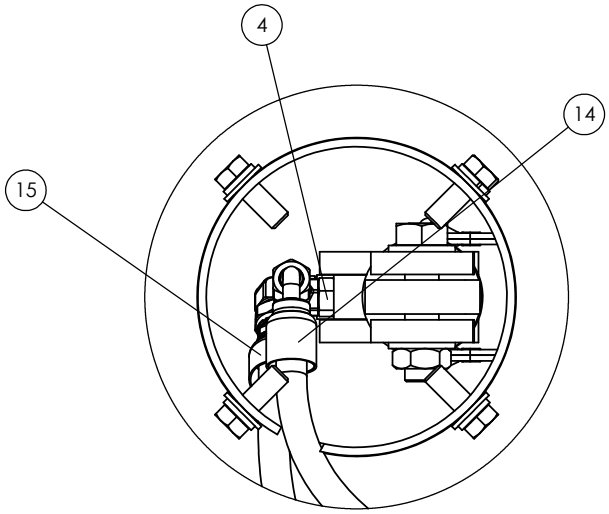

DETAIL B

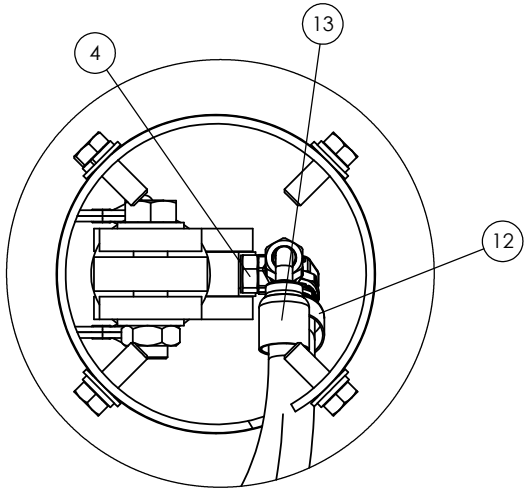

DETAIL C

WHEN ORDERING PARTS, SPECIFY MODEL NUMBER, SERIAL NUMBER AND DESCRIPTION OF PARTS REQUIRED

HEAVYLIFT INSTALLATION W/O AUX WINCH

ITEM	PART NUMBER	DESCRIPTION	QUANTITY	NOTES
	1038068	**HEAVYLIFT INSTALLATION W/O AUX WINCH**		
18	1034799	WELDMENT, CWT RACK	1	
19	1034810	PIN, COUNTERWEIGHT WELD	4	
20	1034832	WELDMENT, 4500 LB COUNTERWEIGHT	1	
21	1034842	WELDMENT, HEAVYWEIGHT SLAB TOP	1	
22	1034844	CYLINDER, COUNTERWEIGHT REMOVAL	3	
23	1034876	WELDMENT, HEAVYWEIGHT SLAB BOTTOM	1	
24	1034937	PIN, COUNTERWEIGHT REMOVAL	2	
25	1037712	SLAB WELDMENT	1	
26	1039315	PLATE, TOP STOP	2	
27	1223-1013	CWT REMOVAL SWITCH	1	
28	HHCS-C2503758Z0	HEX HEAD CAP SCREW, 1/4-20 X 3/8 LEN, GR8, ZN	2	
29	HHCS-C250B258Z0	HEX HEAD CAP SCREW, 1/4-20 X 2 1/4 LEN, GR8, ZN	2	
30	HHCS-C375A508Z0	HEX HEAD CAP SCREW, 3/8-16 X 1 1/2 LEN, GR8, ZN	4	
31	HHCS-C500A378Z0	HEX HEAD CAP SCREW, 1/2-13 X 1 3/8 LEN, GR8, ZN	8	
32	HHCS-C750C258R0	HEX HEAD CAP SCREW, 3/4-10 X 3 1/4 LEN, GR8, NF	12	
33	HHCS-C875B758M0	HEX HEAD CAP SCREW, 7/8-9 X 2 3/4 LEN, GR8, MA	4	
34	HHCS-C875F508M0	HEX HEAD CAP SCREW, 7/8-9 X 6 1/2 LEN, GR8, MA	4	

WHEN ORDERING PARTS, SPECIFY MODEL NUMBER, SERIAL NUMBER AND DESCRIPTION OF PARTS REQUIRED

HEAVYLIFT INSTALLATION W/O AUX WINCH

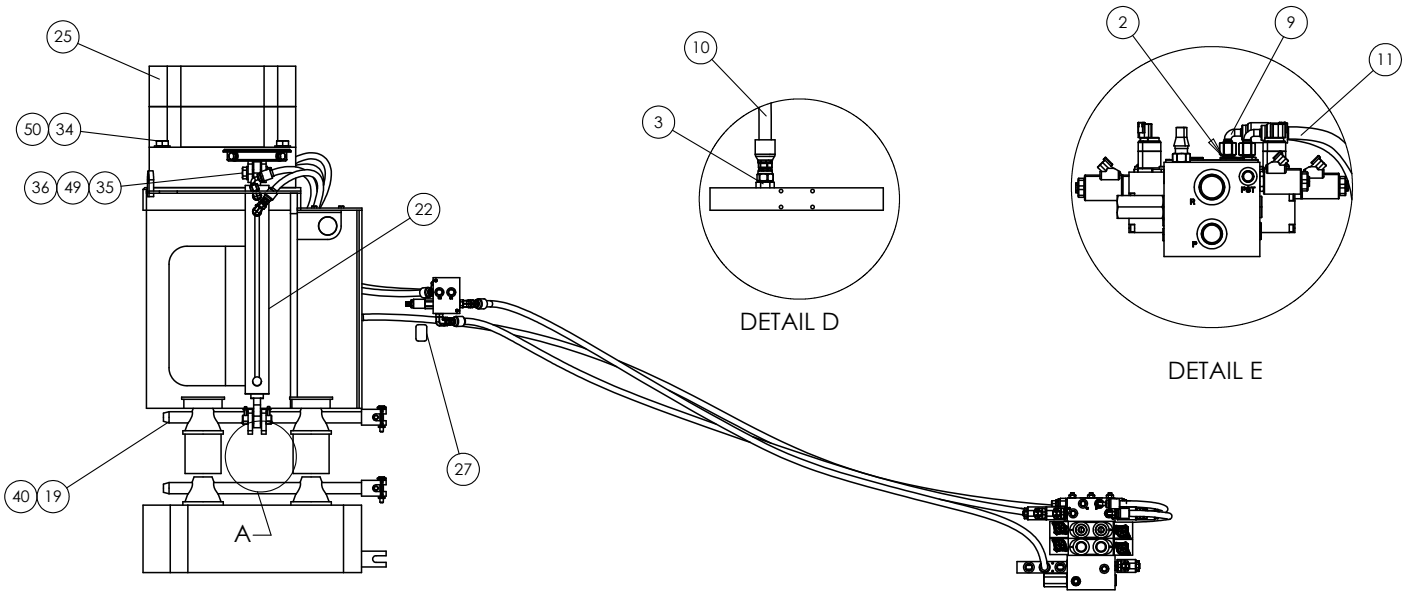

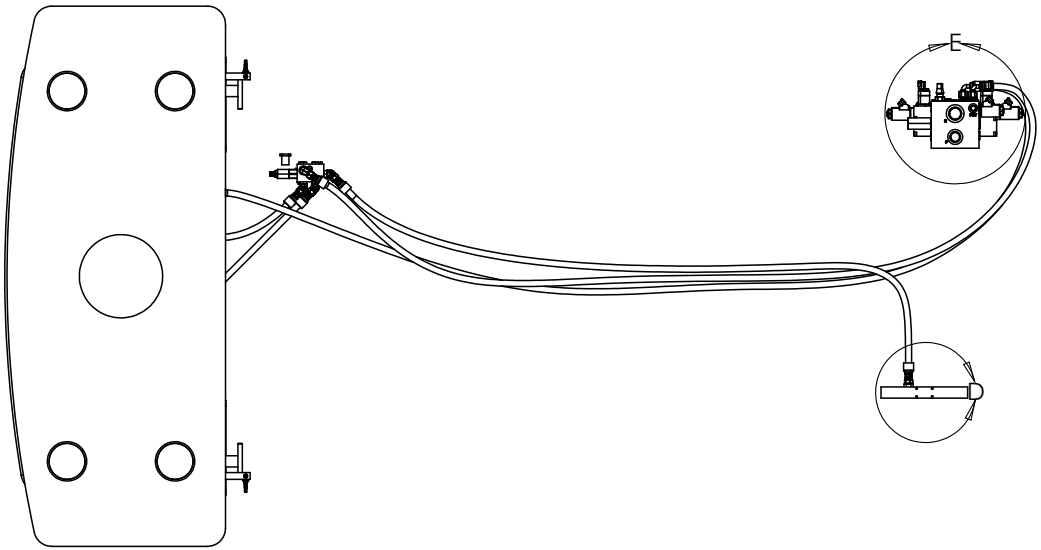

WHEN ORDERING PARTS, SPECIFY MODEL NUMBER, SERIAL NUMBER AND DESCRIPTION OF PARTS REQUIRED

ITEM	PART NUMBER	DESCRIPTION	QUANTITY	NOTES
	1038068	**HEAVYLIFT INSTALLATION W/O AUX WINCH**		
35	HHCS-F750C008M0	HEX HEAD CAP SCREW, 3/4-16 X 3 LEN, GR8, MA	2	
36	NUT2-C7500008M0	HEX JAM NUT, 3/4-10, GR8, MA	2	
37	NUT3-C7500008Z0	NYLON LOCK NUT, 3/4-10, GR8, ZN	12	
38	NUT3-C8750008M0	NYLON LOCK NUT, 7/8-9, GR8, MA	4	
39	PIN4-X250A12XZ0	LOCK PIN WITH ROUNDED RETAINER, 1/4 DIA X 1 1/8 LEN, ZINC	4	
40	PIN7-X375A87XZ0	LOCK PIN WITH SQUARE RETAINER, 3/8 DIA X 1 7/8 LEN, ZINC	4	
41	SH03-C313A00BB0	SHCS BUTTON HEAD, 5/16-18 X 1 LEN, BO	6	
42	T113212	PANEL ASSY, COVER- CTWT	1	
43	T117460	SPACER, CWT RACK MOUNTING	6	
44	T132014	MANIFOLD	1	
45	WSH2-X2500008Z0	SAE WASHER, 1/4, GR8, ZN	4	
46	WSH2-X3130008Z0	SAE WASHER, 5/16, GR8, ZN	6	
47	WSH2-X3750008Z0	SAE WASHER, 3/8, GR8, ZN	4	
48	WSH2-X5000008Z0	SAE WASHER, 1/2, GR8, ZN	8	
49	WSH2-X7500008Z0	SAE WASHER, 3/4, GR8, ZN	28	
50	WSH2-X8750008Z0	SAE WASHER, 7/8, GR8, ZN	12	
51	WSH4-X5000008Z0	SPIRAL LOCK WASHER, 1/2, GR8, ZN	8	

WHEN ORDERING PARTS, SPECIFY MODEL NUMBER, SERIAL NUMBER AND DESCRIPTION OF PARTS REQUIRED

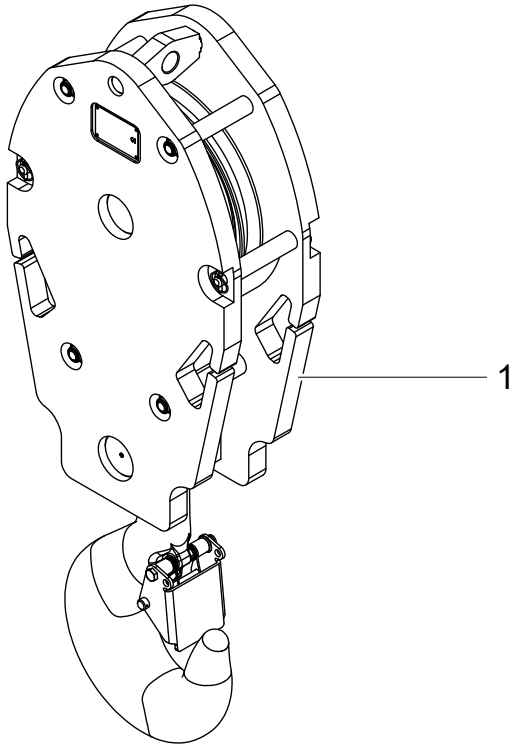

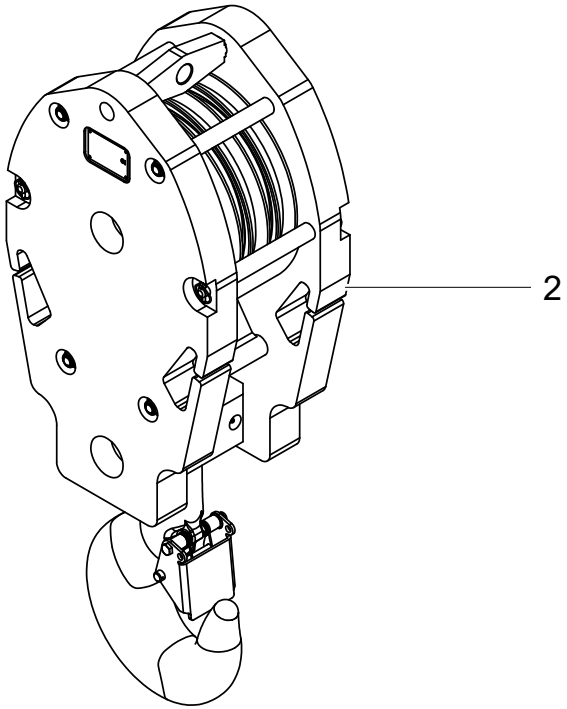

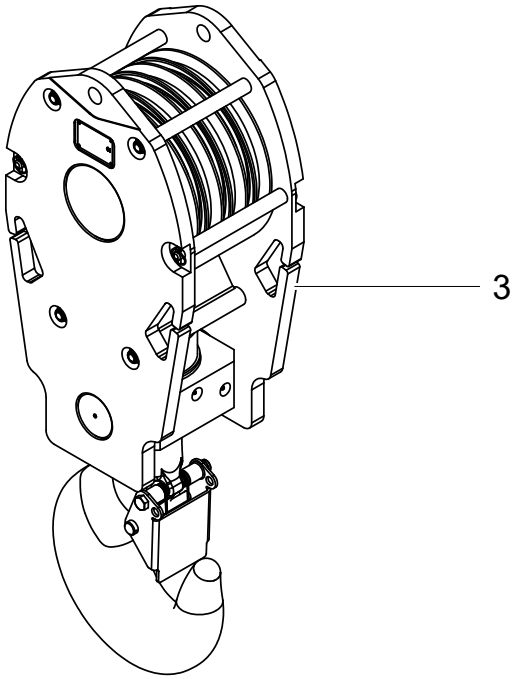

WHEN ORDERING PARTS, SPECIFY MODEL NUMBER, SERIAL NUMBER AND DESCRIPTION OF PARTS REQUIRED

ITEM	PART NUMBER	DESCRIPTION	QUANTITY	NOTES
	1035226	**50-155 M & 50-155 U HOOK BLOCK OPTIONS**		
1	**1035223**	HOOK BLOCK ASSY, 1 SHEAVE, 20 TON	1	SEE PAGE 121
2	**1035224**	HOOK BLOCK ASSY, 3 SHEAVE, 35 TON	1	SEE PAGE 123
3	**1035225**	HOOK BLOCK ASSY, 4 SHEAVE, 50 TON	1	SEE PAGE 125

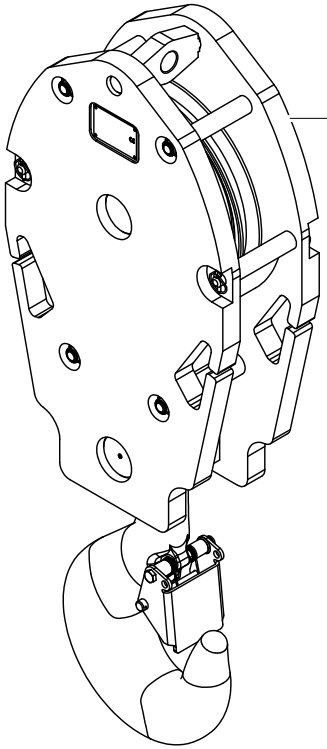
1

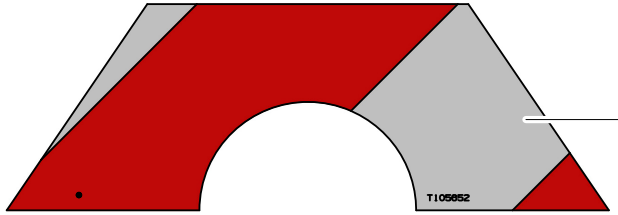
T105652
2

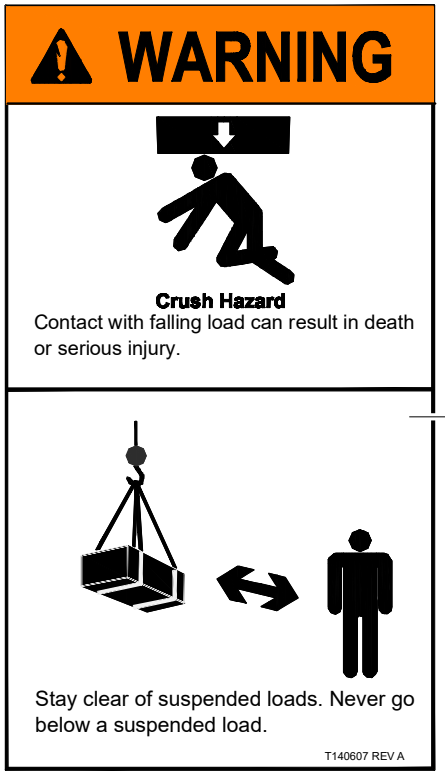
WARNING
Crush Hazard
Contact with falling load can result in death or serious injury.
Stay clear of suspended loads. Never go below a suspended load.
T140607 REV A
3

HOOK BLOCK ASSY, 1 SHEAVE, 20 TON

ITEM	PART NUMBER	DESCRIPTION	QUANTITY	NOTES
	1035223	**HOOK BLOCK ASSY, 1 SHEAVE, 20 TON**		
1	1034587	HOOKBLOCK, 1 SHEAVE, 20T, 5/8IN, 500LBS	1	
2	T105652	DECAL, HOOK BLOCK	2	
3	T140607	DECAL, CRUSH HAZARD, STAY CLEAR LOAD	2	

WHEN ORDERING PARTS, SPECIFY MODEL NUMBER, SERIAL NUMBER AND DESCRIPTION OF PARTS REQUIRED

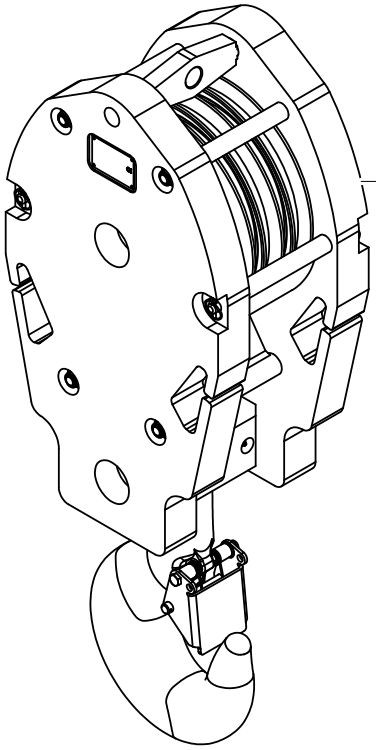
1

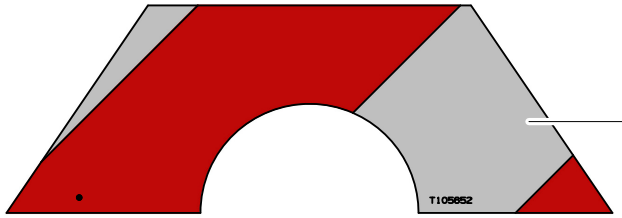
T105852
2

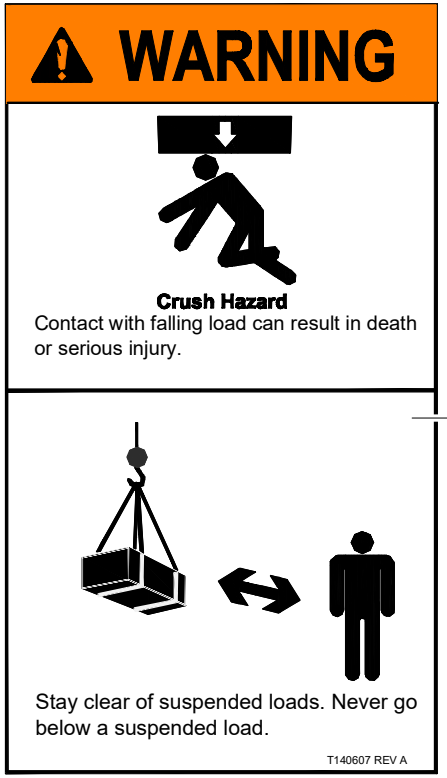
WARNING
Crush Hazard
Contact with falling load can result in death or serious injury.
Stay clear of suspended loads. Never go below a suspended load.
T140607 REV A
3

HOOK BLOCK ASSY, 3 SHEAVE, 35 TON

ITEM	PART NUMBER	DESCRIPTION	QUANTITY	NOTES
	1035224	**HOOK BLOCK ASSY, 3 SHEAVE, 35 TON**		
1	1034586	HOOKBLOCK, 3 SHEAVE, 35T, 5/8IN, 824LBS	1	
2	T105652	DECAL, HOOK BLOCK	2	
3	T140607	DECAL, CRUSH HAZARD, STAY CLEAR LOAD	2	

WHEN ORDERING PARTS, SPECIFY MODEL NUMBER, SERIAL NUMBER AND DESCRIPTION OF PARTS REQUIRED

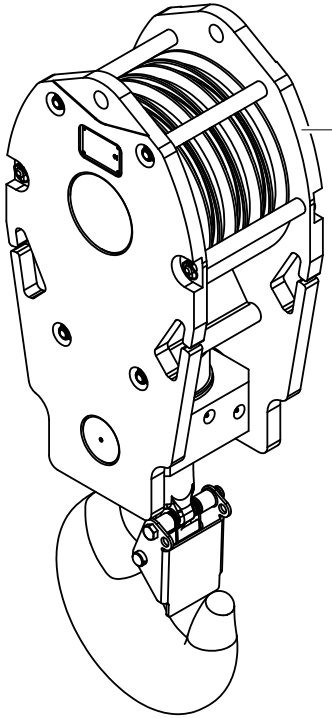

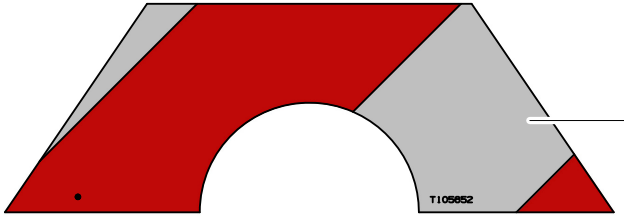

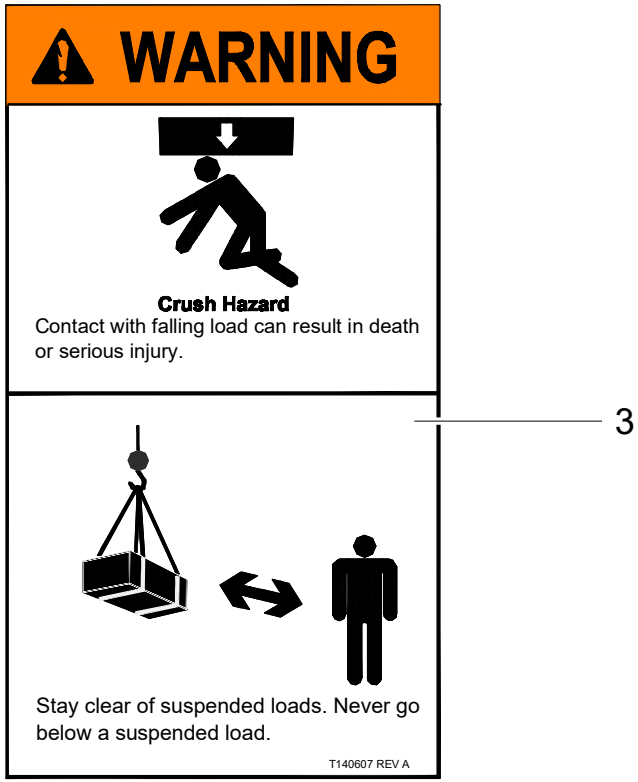

WHEN ORDERING PARTS, SPECIFY MODEL NUMBER, SERIAL NUMBER AND DESCRIPTION OF PARTS REQUIRED

HOOK BLOCK ASSY, 4 SHEAVE, 50 TON

ITEM	PART NUMBER	DESCRIPTION	QUANTITY	NOTES
	1035225	**HOOK BLOCK ASSY, 4 SHEAVE, 50 TON**		
1	1034589	HOOKBLOCK, 4 SHEAVE, 50T, 5/8IN, 825 LB	1	
2	T105652	DECAL, HOOK BLOCK	2	
3	T140607	DECAL, CRUSH HAZARD, STAY CLEAR LOAD	2	

WHEN ORDERING PARTS, SPECIFY MODEL NUMBER, SERIAL NUMBER AND DESCRIPTION OF PARTS REQUIRED

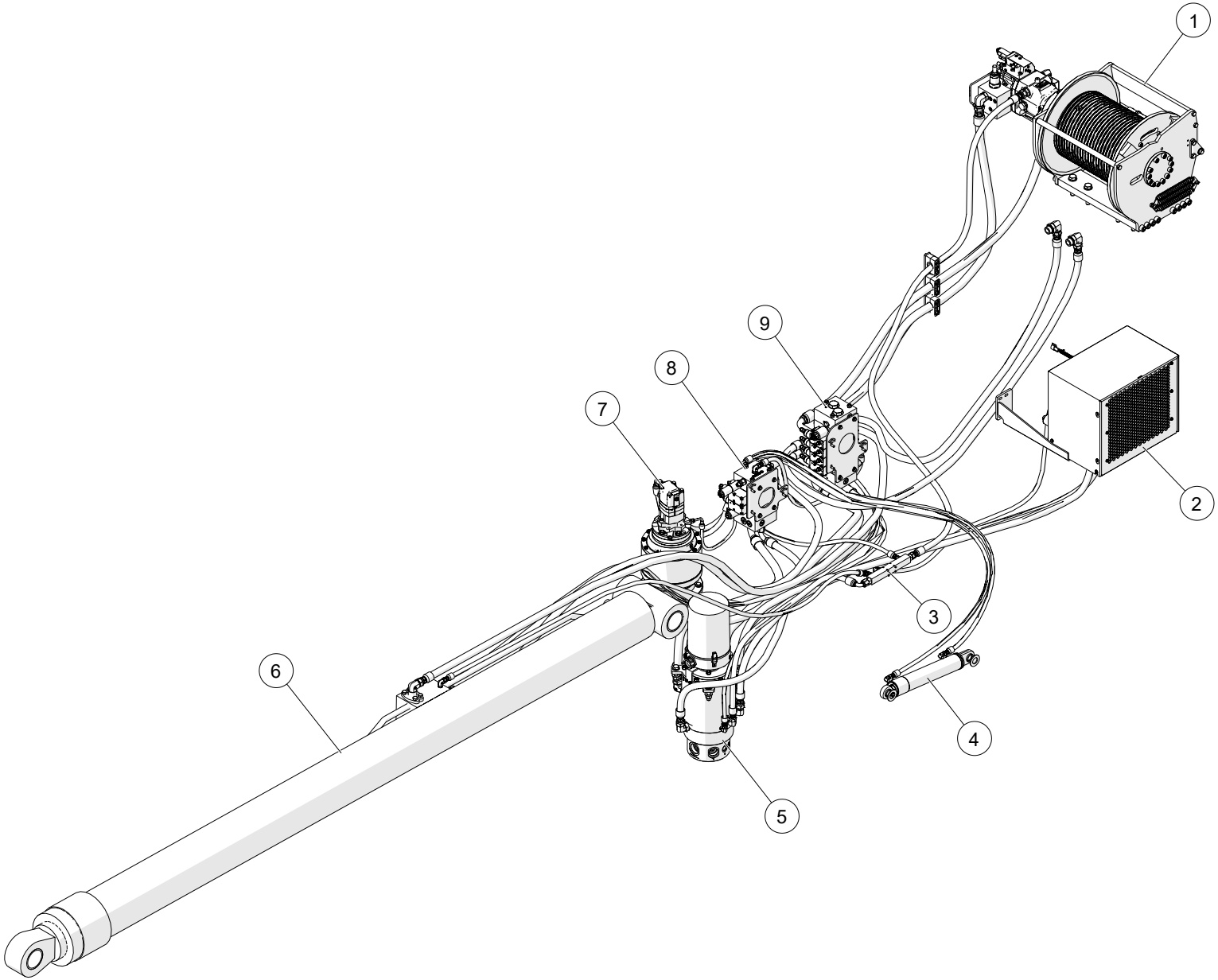

WHEN ORDERING PARTS, SPECIFY MODEL NUMBER, SERIAL NUMBER AND DESCRIPTION OF PARTS REQUIRED

UPPER HYDRAULICS ASSEMBLY

ITEM	PART NUMBER	DESCRIPTION	QUANTITY	NOTES
	1035156	**UPPER HYDRAULICS ASSEMBLY**		
1	**1-ASSEMBLY**	FOR REFERENCE ONLY	1	SEE PAGE 129
2	**2-ASSEMBLY**	FOR REFERENCE ONLY	1	SEE PAGE 131
3	**3-ASSEMBLY**	FOR REFERENCE ONLY	1	SEE PAGE 133
4	**4-ASSEMBLY**	FOR REFERENCE ONLY	1	SEE PAGE 135
5	**5-ASSEMBLY**	FOR REFERENCE ONLY	1	SEE PAGE 137
6	**6-ASSEMBLY**	FOR REFERENCE ONLY	1	SEE PAGE 141
7	**7-ASSEMBLY**	FOR REFERENCE ONLY	1	SEE PAGE 143
8	**8-ASSEMBLY**	FOR REFERENCE ONLY	1	SEE PAGE 145
9	**9-ASSEMBLY**	FOR REFERENCE ONLY	1	SEE PAGE 149

WHEN ORDERING PARTS, SPECIFY MODEL NUMBER, SERIAL NUMBER AND DESCRIPTION OF PARTS REQUIRED

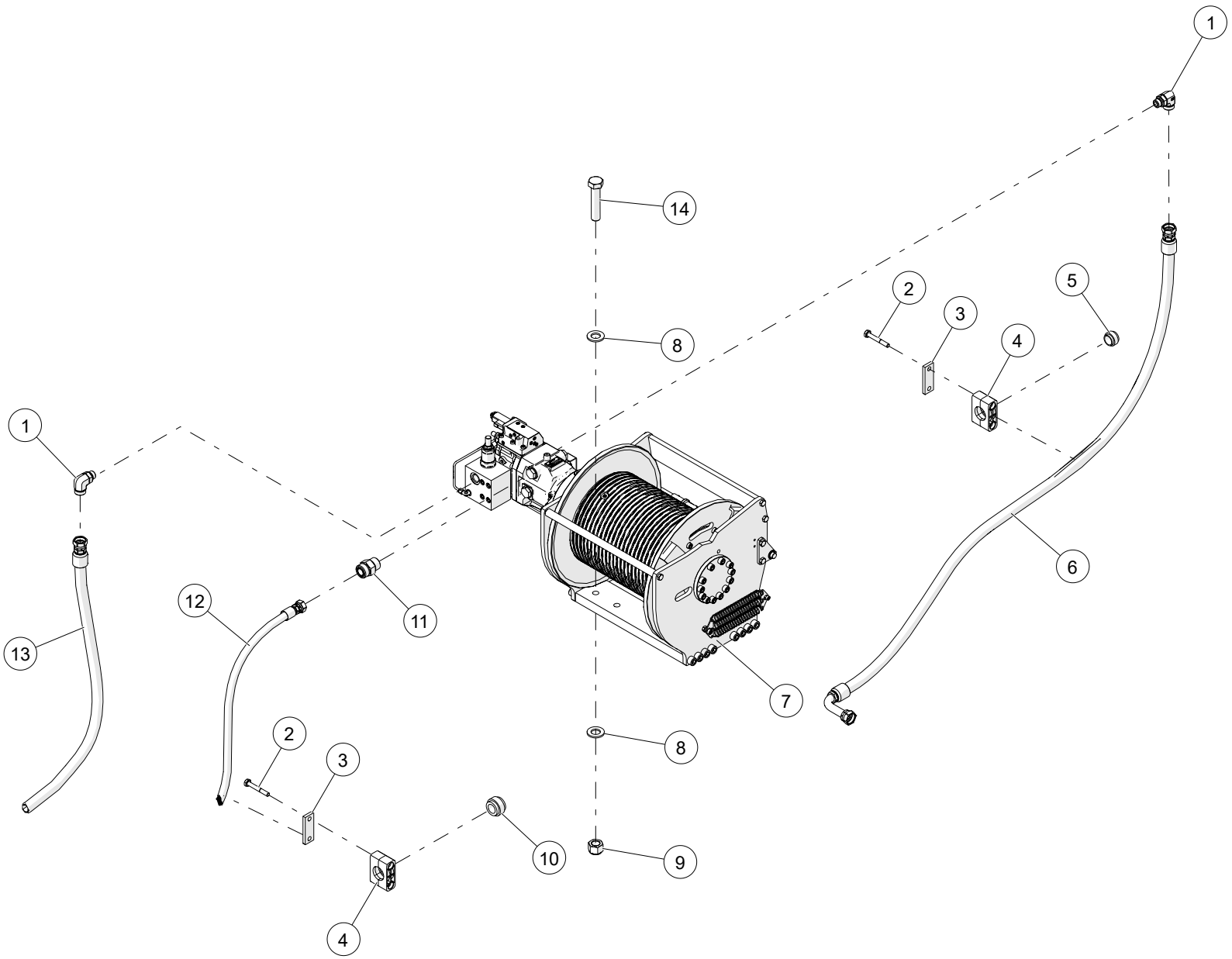

WHEN ORDERING PARTS, SPECIFY MODEL NUMBER, SERIAL NUMBER AND DESCRIPTION OF PARTS REQUIRED

ITEM	PART NUMBER	DESCRIPTION	QUANTITY	NOTES
	1-ASSEMBLY	**FOR REFERENCE ONLY**		
1	1014022	ELBOW, 90, MOFS-16/MORB-12	2	
2	1034059	STAUFF BOLT, AS-3/8-16UNCX2-3/4-AB-GR5-W3	6	
3	1034056	DPAL-5S-W3-N	3	
4	1034057	5S-PP-R	5	
5	1034063	RI-32-6/5S	4	
6	1027909	HOSE, -16, 3000, FOFS-16SW / L90FOFS-16SW, 89.75	1	
7	1008361	WINCH, MAIN/AUX (DYNAMIC)	1	
8	WSH1-X7500008Z0	WASHER, 3/4, GR8, ZN	16	
9	NUT3-F7500008M0	NYLON LOCK NUT, 3/4-16, GR8, MA	8	
10	1034062	RI-25-6/5S	1	
11	1010088	ADAPTER, MOFS-12/MORB-12	6	
12	1027914	HOSE, -10, 300, FOFS-10SW / FOFS-12SW, 113.75	1	
13	1027908	HOSE, -16, 3000, FOFS-16SW / 90FOFS-16SW, 78.5	1	
14	HHCS-F750C508M1	HEX HEAD CAP SCREW, 3/4-16 X 3 1/2 LEN, GR8, MA, FULL THREAD	8	

WHEN ORDERING PARTS, SPECIFY MODEL NUMBER, SERIAL NUMBER AND DESCRIPTION OF PARTS REQUIRED

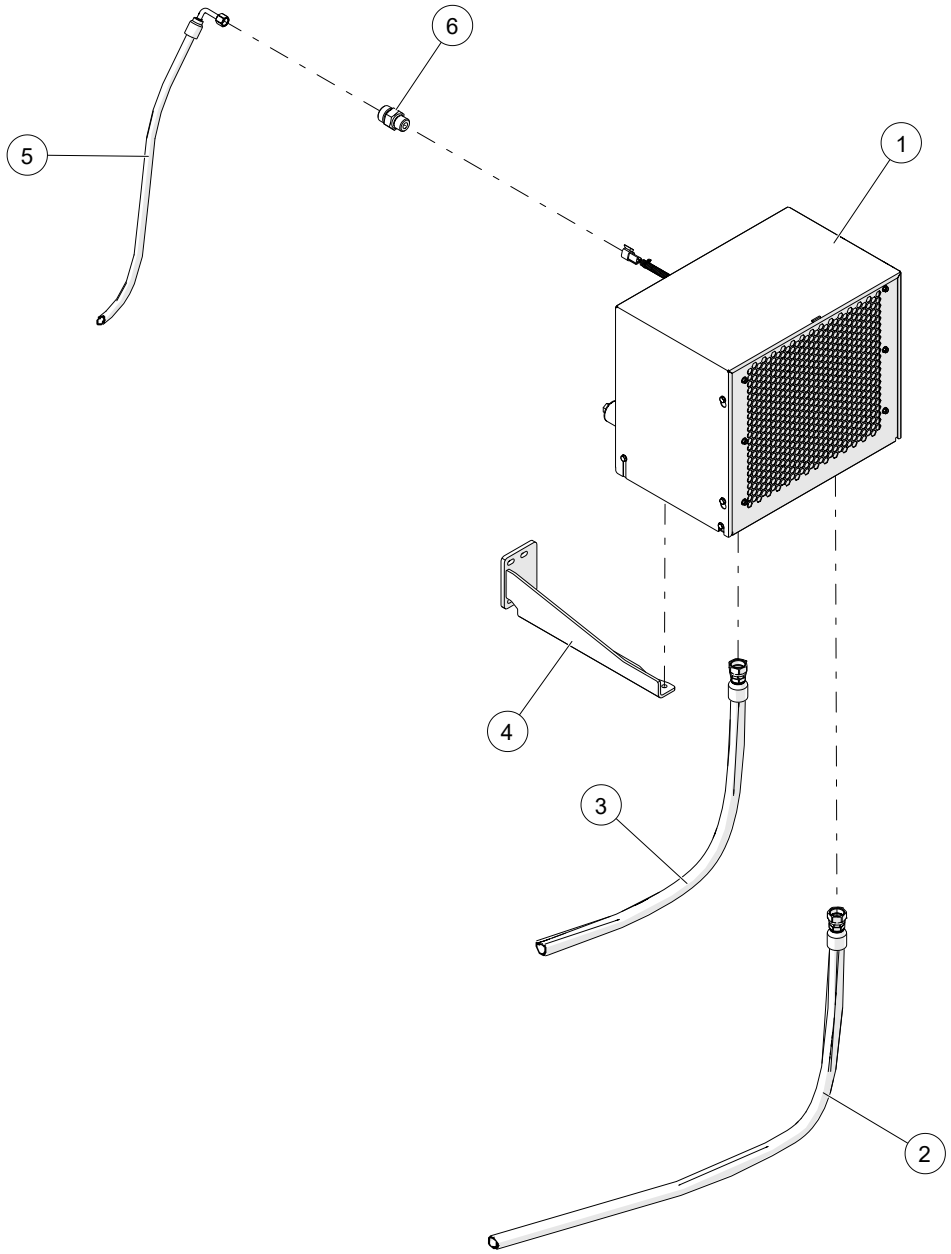

WHEN ORDERING PARTS, SPECIFY MODEL NUMBER, SERIAL NUMBER AND DESCRIPTION OF PARTS REQUIRED

ITEM	PART NUMBER	DESCRIPTION	QUANTITY	NOTES
	2-ASSEMBLY	**FOR REFERENCE ONLY**		
1	1008805	CROSS OVER 80 HVAC	1	
2	1027894	HOSE, -12, 3000, FOFS-12SW/FOFS-12SW, 102.25	1	
3	1027895	HOSE, -12, 300, FOFS-12SW/FOFS-12SW, 98.75	1	
4	1038938	AC BRACKET WELDMENT	1	
5	1027993	HOSE, -6, 300, L90FOFS-6SW/FOFS-6SW, 70.0	1	
6	1010071	ADAPTER, MOFS-6/MORB-6	5	

WHEN ORDERING PARTS, SPECIFY MODEL NUMBER, SERIAL NUMBER AND DESCRIPTION OF PARTS REQUIRED

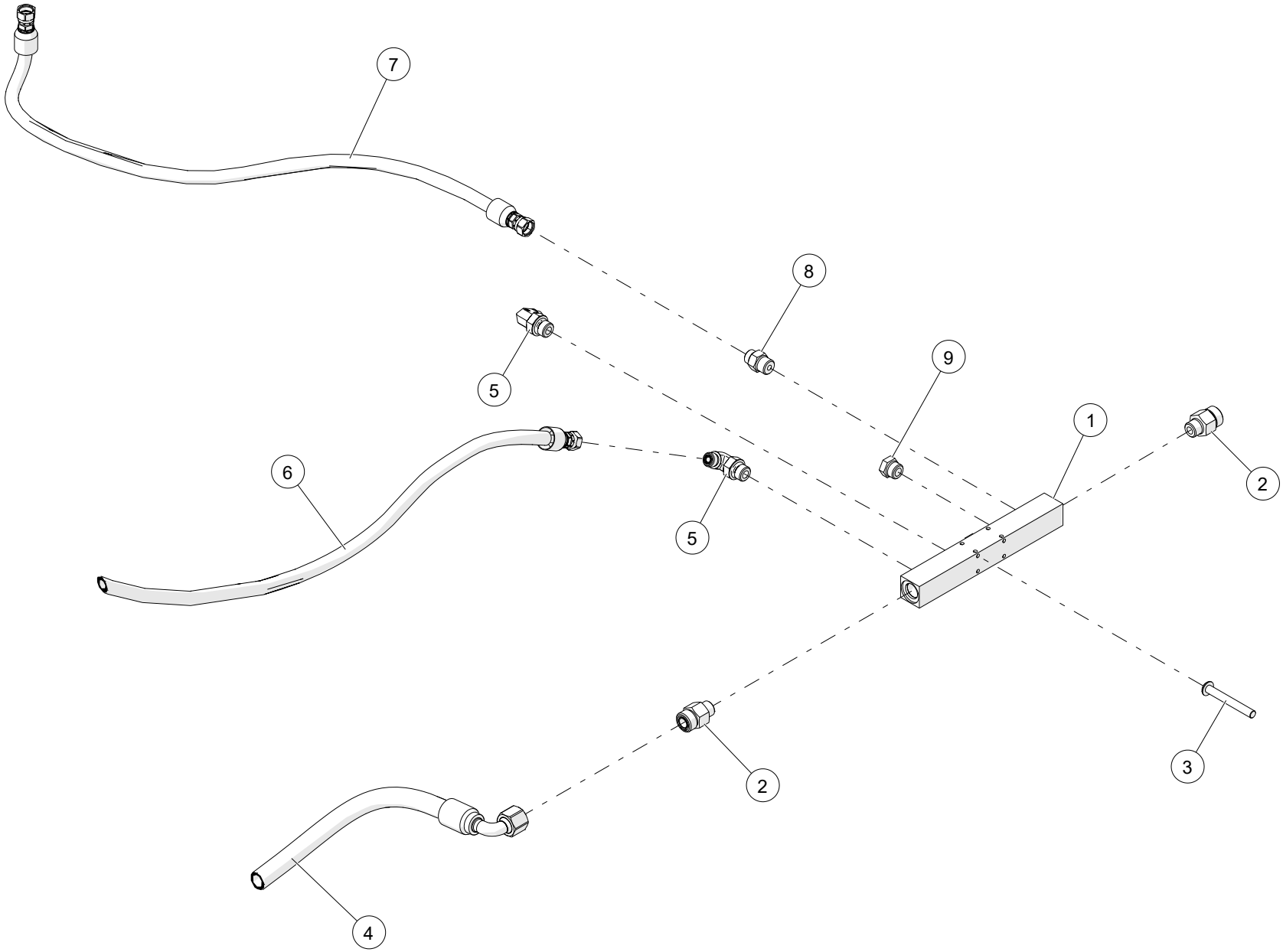

WHEN ORDERING PARTS, SPECIFY MODEL NUMBER, SERIAL NUMBER AND DESCRIPTION OF PARTS REQUIRED

ITEM	PART NUMBER	DESCRIPTION	QUANTITY	NOTES
	3-ASSEMBLY	**FOR REFERENCE ONLY**		
1	T132014	MANIFOLD	1	
2	1010080	ADAPTER, MOFS-10/MORB-8	2	
3	1027289	CAP SCREW, 10-24 X 40, ZINC	4	
4	1027893	HOSE, -10, 300, FOFS-10SW / 90FOFS-10SW, 44.0	1	
5	1014005	ELBOW, 90, MOFS-6/MORB-8	2	
6	1027888	HOSE, -4, 300, FOFS-4SW/FOFS-4SW,105.0	1	
7	1027891	HOSE, -6, 300, FOFS-6SW/FOFS-6SW, 38.0	1	
8	1010073	ADAPTER, MOFS-6/MORB-8	1	
9	1019668	PLUG, HEX, ORB-8	2	

WHEN ORDERING PARTS, SPECIFY MODEL NUMBER, SERIAL NUMBER AND DESCRIPTION OF PARTS REQUIRED

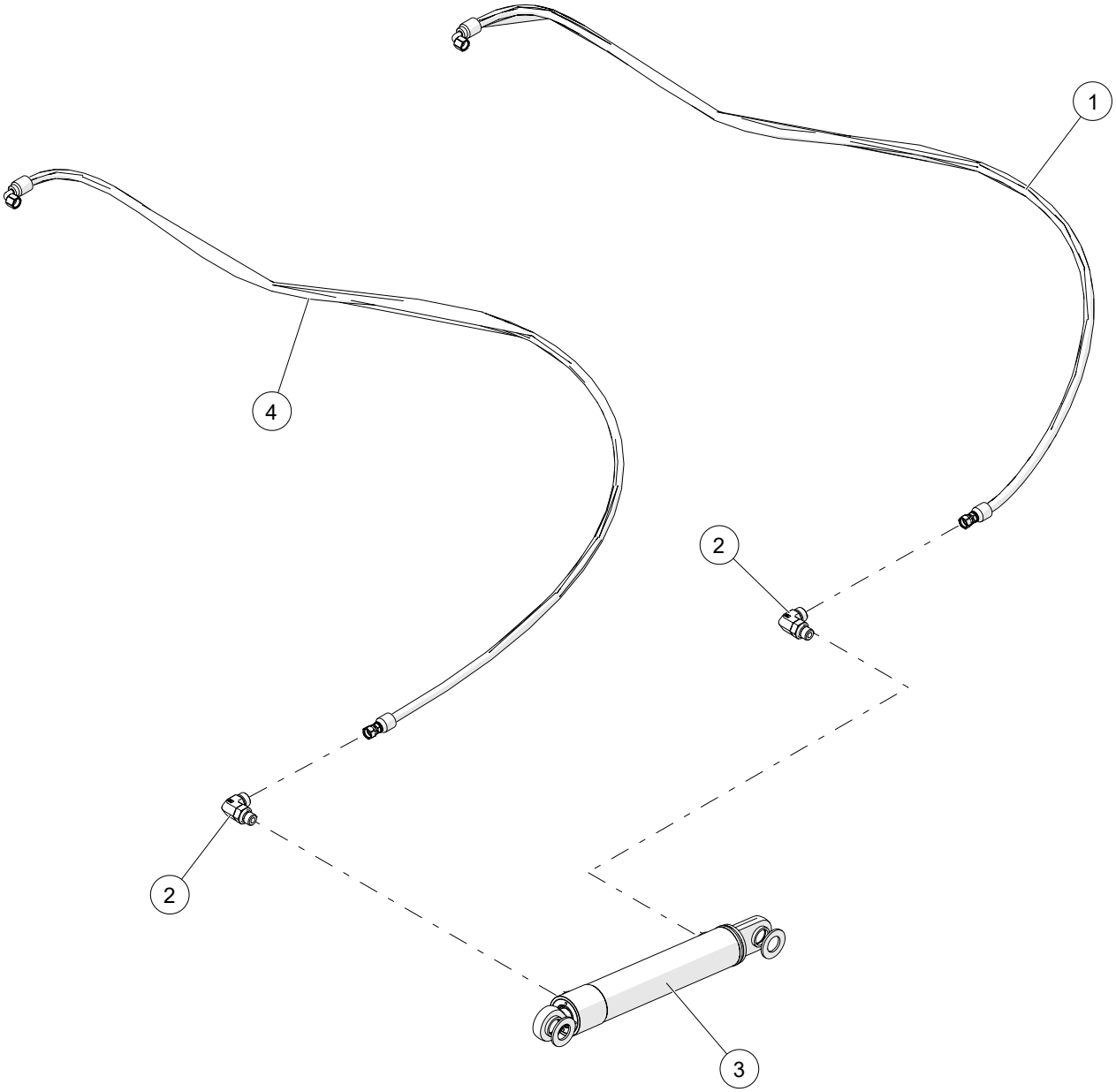

WHEN ORDERING PARTS, SPECIFY MODEL NUMBER, SERIAL NUMBER AND DESCRIPTION OF PARTS REQUIRED

ITEM	PART NUMBER	DESCRIPTION	QUANTITY	NOTES
	4-ASSEMBLY	**FOR REFERENCE ONLY**		
1	1027883	HOSE, -6, 3000, 90FOFS-6SW/FOFS-6SW, 77.75	1	
2	1014001	ELBOW, 90, MOFS-6/MORB-6	6	
3	T163592	CYLINDER, CAB TILT	1	
4	1027882	HOSE, -6, 3000, 90FOFS-6SW/FOFS-6SW, 87.5	1	

WHEN ORDERING PARTS, SPECIFY MODEL NUMBER, SERIAL NUMBER AND DESCRIPTION OF PARTS REQUIRED

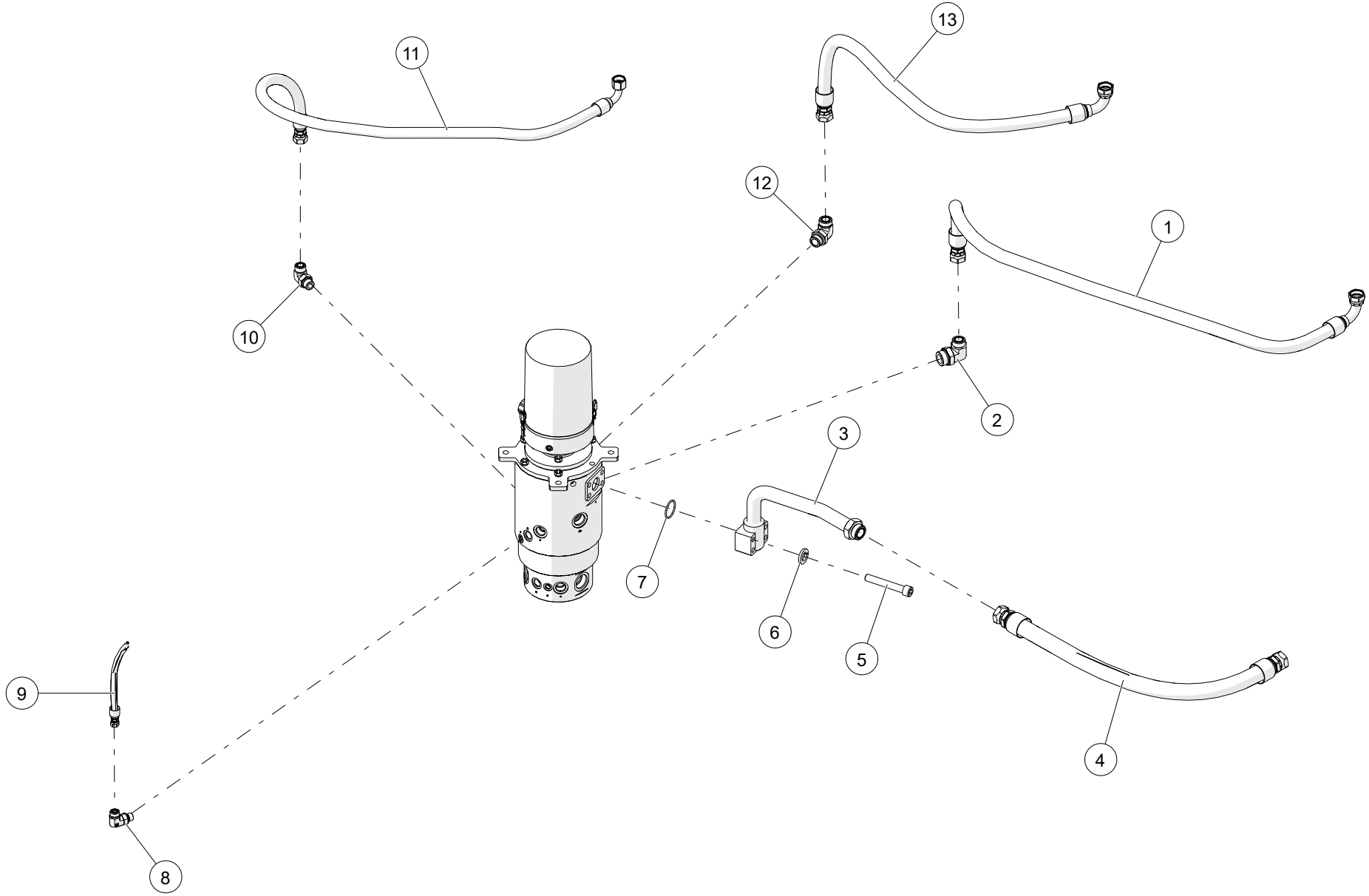

WHEN ORDERING PARTS, SPECIFY MODEL NUMBER, SERIAL NUMBER AND DESCRIPTION OF PARTS REQUIRED

ITEM	PART NUMBER	DESCRIPTION	QUANTITY	NOTES
	5-ASSEMBLY	**FOR REFERENCE ONLY**		
1	1027902	HOSE, -16, 3000, FOFS-16SW / 90FOFS-16SW, 68.0	1	
2	1014025	ELBOW, 90, MOFS-16/MORB-20	1	
3	1037626	TUBE,-24,300,90C61-24/MOFS-20	1	
4	1027945	HOSE, -20, LOW, FOFS-20SW / FOFS-20SW, 38.5	1	
5	SHCS-C500C25AB0	SOCKET HEAD CAP SCREW, 1/2-13 X 3 1/4 LEN, BO	4	
6	WSH4-X5000008Z0	SPIRAL LOCK WASHER, 1/2, GR8, ZN	4	
7	1020291	O-RING, CODE 61/62 -24 SAE, -225	2	
8	1014001	ELBOW, 90, MOFS-6/MORB-6	6	
9	1027892	HOSE,-6,3000,90FOFS-6SW/FOFS-6SW,90.75	1	
10	1014019	ELBOW, 90, MOFS-12/MORB-12	2	
11	1027905	HOSE, -12, 3000, FOFS-12SW / 90FOFS-12SW, 61.5	1	
12	1014023	ELBOW, 90, MOFS-16/MORB-16	2	
13	1027901	HOSE, -16, 3000, FOFS-16SW / 90FOFS-16SW, 48.5	1	

WHEN ORDERING PARTS, SPECIFY MODEL NUMBER, SERIAL NUMBER AND DESCRIPTION OF PARTS REQUIRED

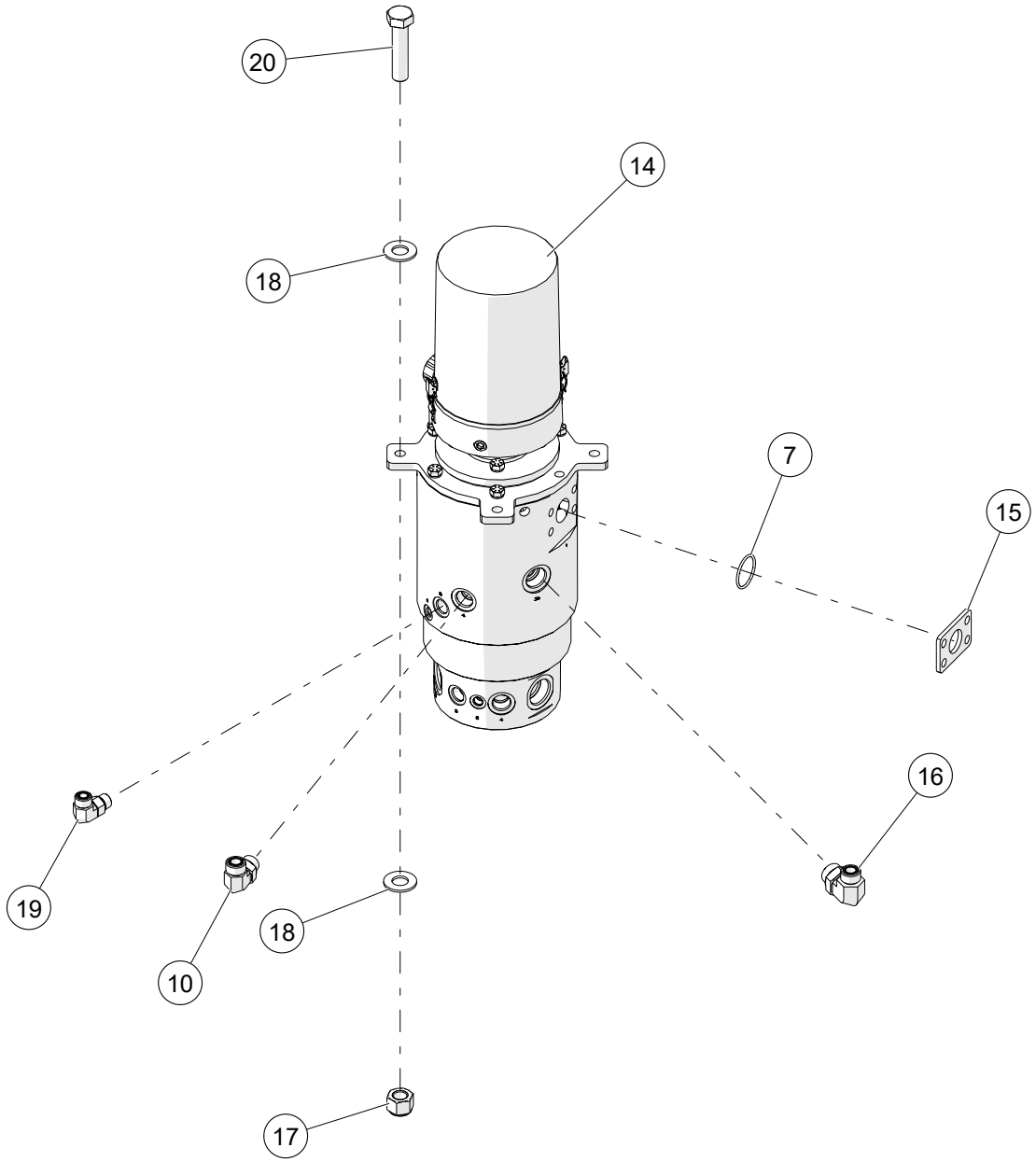

WHEN ORDERING PARTS, SPECIFY MODEL NUMBER, SERIAL NUMBER AND DESCRIPTION OF PARTS REQUIRED

ITEM	PART NUMBER	DESCRIPTION	QUANTITY	NOTES
	5-ASSEMBLY	**FOR REFERENCE ONLY**		
14	1038486	HYDRAULIC SWIVEL	1	
15	1011534	SPACER, CODE 61 -24, 0.25	1	
16	1014020	ELBOW, 90, MOFS-12/MORB-16	3	
17	NUT3-C6250008Z0	NYLON LOCK NUT, 5/8-11, GR8, ZN	4	
18	WSH2-X6250008Z0	SAE WASHER, 5/8, GR8, ZN	8	
19	1014012	ELBOW, 90, MOFS-10/MORB-10	2	
20	HHCS-C625B758Z0	HEX HEAD CAP SCREW, 5/8-11 X 2 3/4 LEN, GR8, ZN	4	

WHEN ORDERING PARTS, SPECIFY MODEL NUMBER, SERIAL NUMBER AND DESCRIPTION OF PARTS REQUIRED

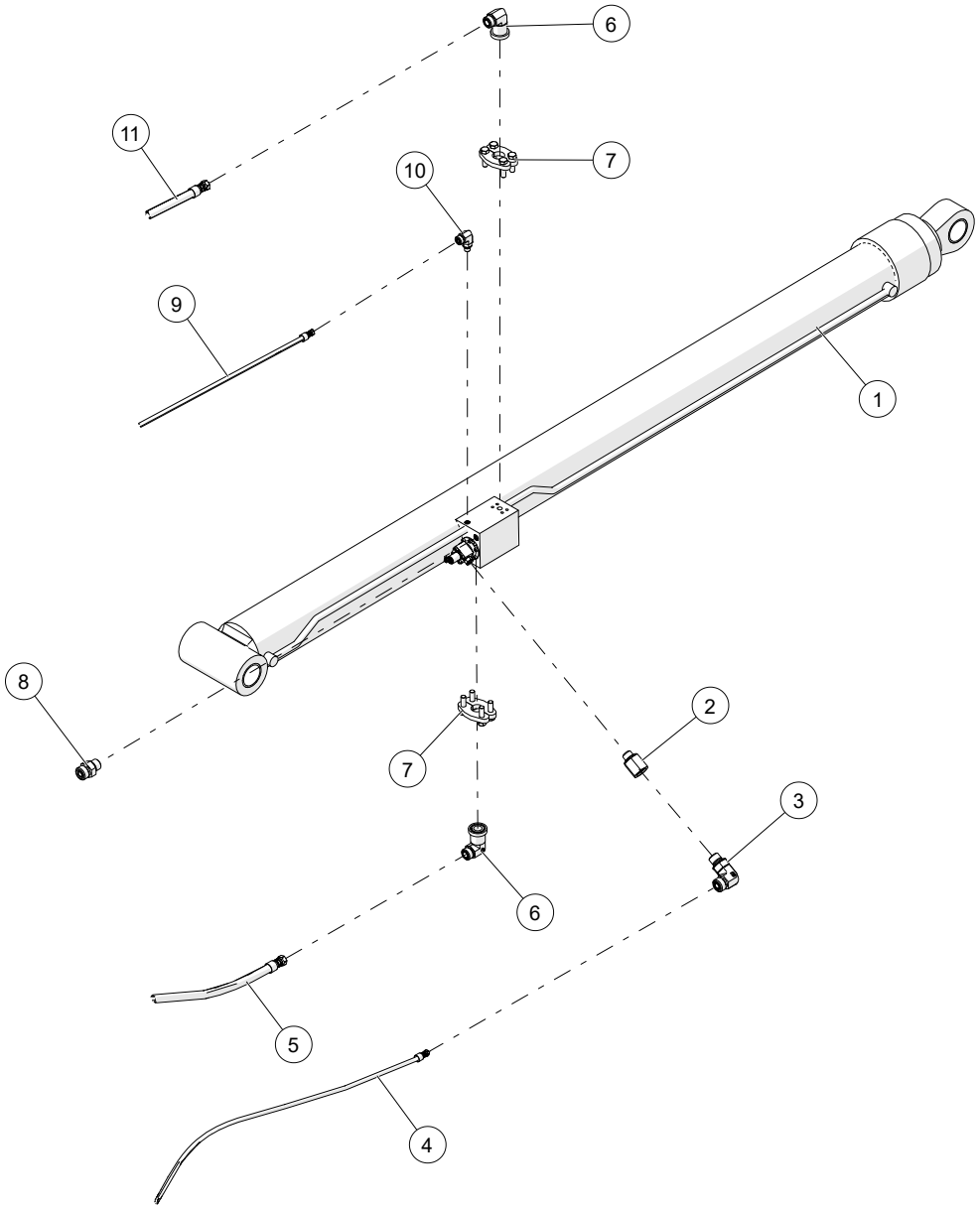

WHEN ORDERING PARTS, SPECIFY MODEL NUMBER, SERIAL NUMBER AND DESCRIPTION OF PARTS REQUIRED

ITEM	PART NUMBER	DESCRIPTION	QUANTITY	NOTES
	6-ASSEMBLY	**FOR REFERENCE ONLY**		
1	1034514	CYLINDER, BOOM LIFT	1	
2	1011216	ADAPTER, FORB-6/MBSPP-4	1	
3	1014001	ELBOW, 90, MOFS-6/MORB-6	6	
4	1027890	HOSE, -6, 3000, FOFS-6SW / 90FOFS-6SW, 136.5	1	
5	1028000	HOSE, -12, 5000, 90FOFS-12SW/FOFS-12SW,130.0	1	
6	1014206	ELBOW, 90,C62-16,MOFS-12	2	
7	1020223	CLAMP, C62-20, KIT	2	
8	1010071	ADAPTER, MOFS-6/MORB-6	5	
9	1027888	HOSE, -4, 300, FOFS-4SW/FOFS-4SW, 105.0	1	
10	1014000	ELBOW, 90, MOFS-6/MORB-4	1	
11	1027904	HOSE, -12, 4500, 90FOFS-12SW / FOFS-12SW, 151.25	1	

WHEN ORDERING PARTS, SPECIFY MODEL NUMBER, SERIAL NUMBER AND DESCRIPTION OF PARTS REQUIRED

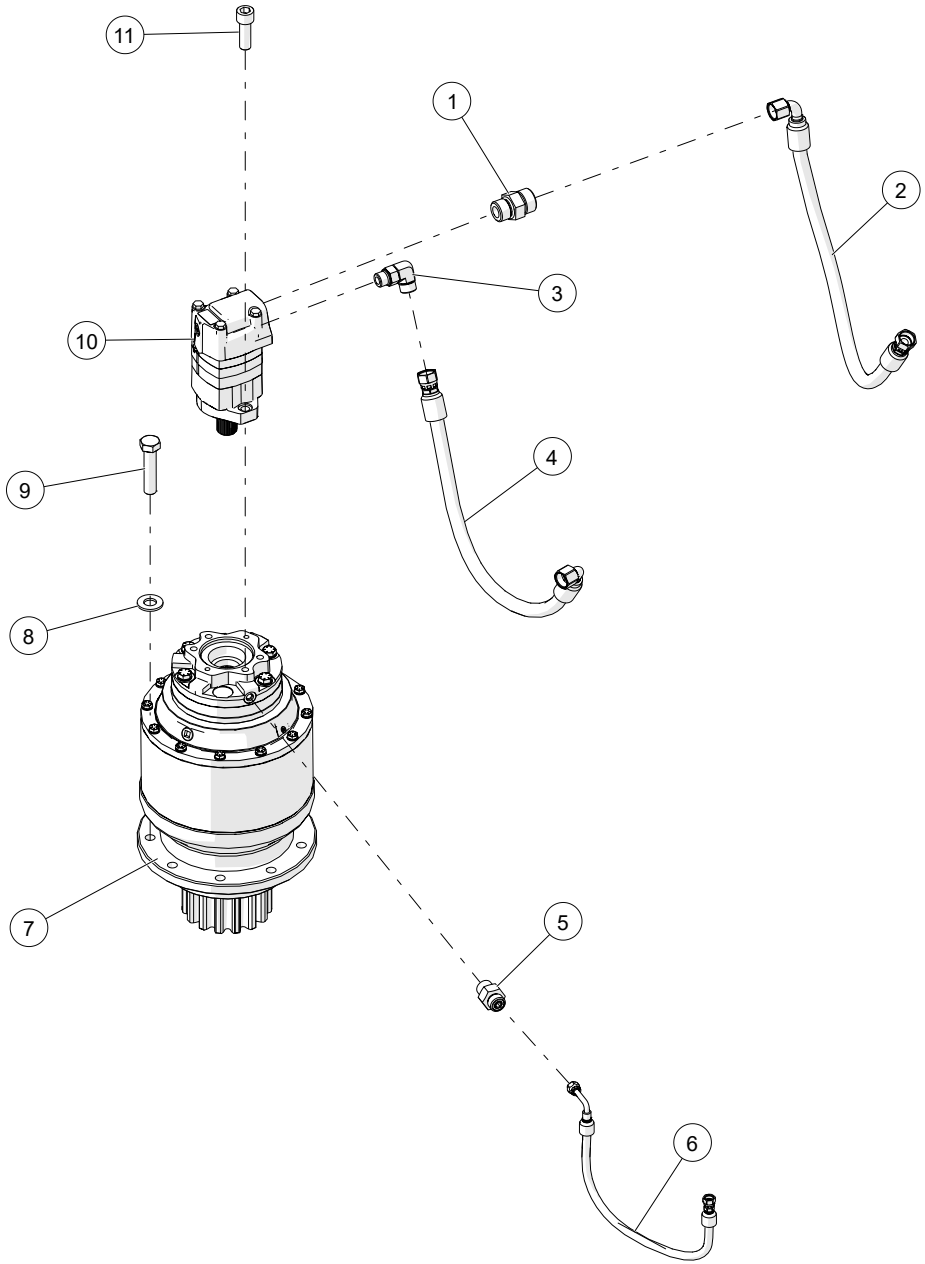

WHEN ORDERING PARTS, SPECIFY MODEL NUMBER, SERIAL NUMBER AND DESCRIPTION OF PARTS REQUIRED

ITEM	PART NUMBER	DESCRIPTION	QUANTITY	NOTES
	7-ASSEMBLY	**FOR REFERENCE ONLY**		
1	1010081	ADAPTER, MOFS-10/MORB-10	1	
2	1028014	HOSE, -10, 4000, 90FOFS-10SW/FOFS-10SW, 28.25	1	
3	1014012	ELBOW, 90, MOFS-10/MORB-10	2	
4	1028013	HOSE, -10, 4000, 90FOFS-10SW/FOFS-10SW, 25.75	1	
5	1010068	ADAPTER, MOFS-4/MORB-6	1	
6	1027885	HOSE, -4, 3000, FOFS-4SW / L90FOFS-4SW, 20.5	1	
7	1008348	SWING DRIVE	1	
8	WSH2-X5000008Z0	SAE WASHER, 1/2, GR8, ZN	9	
9	HHCS-C500B258Z0	HEX HEAD CAP SCREW, 1/2-13 X 2 1/4 LEN, GR8, ZN	9	
10	1008351	MOTOR, SWING	1	
11	S43-12DM035-28	SCR, SHCS M12X1.75X35, ST SQC C8.8	2	

WHEN ORDERING PARTS, SPECIFY MODEL NUMBER, SERIAL NUMBER AND DESCRIPTION OF PARTS REQUIRED

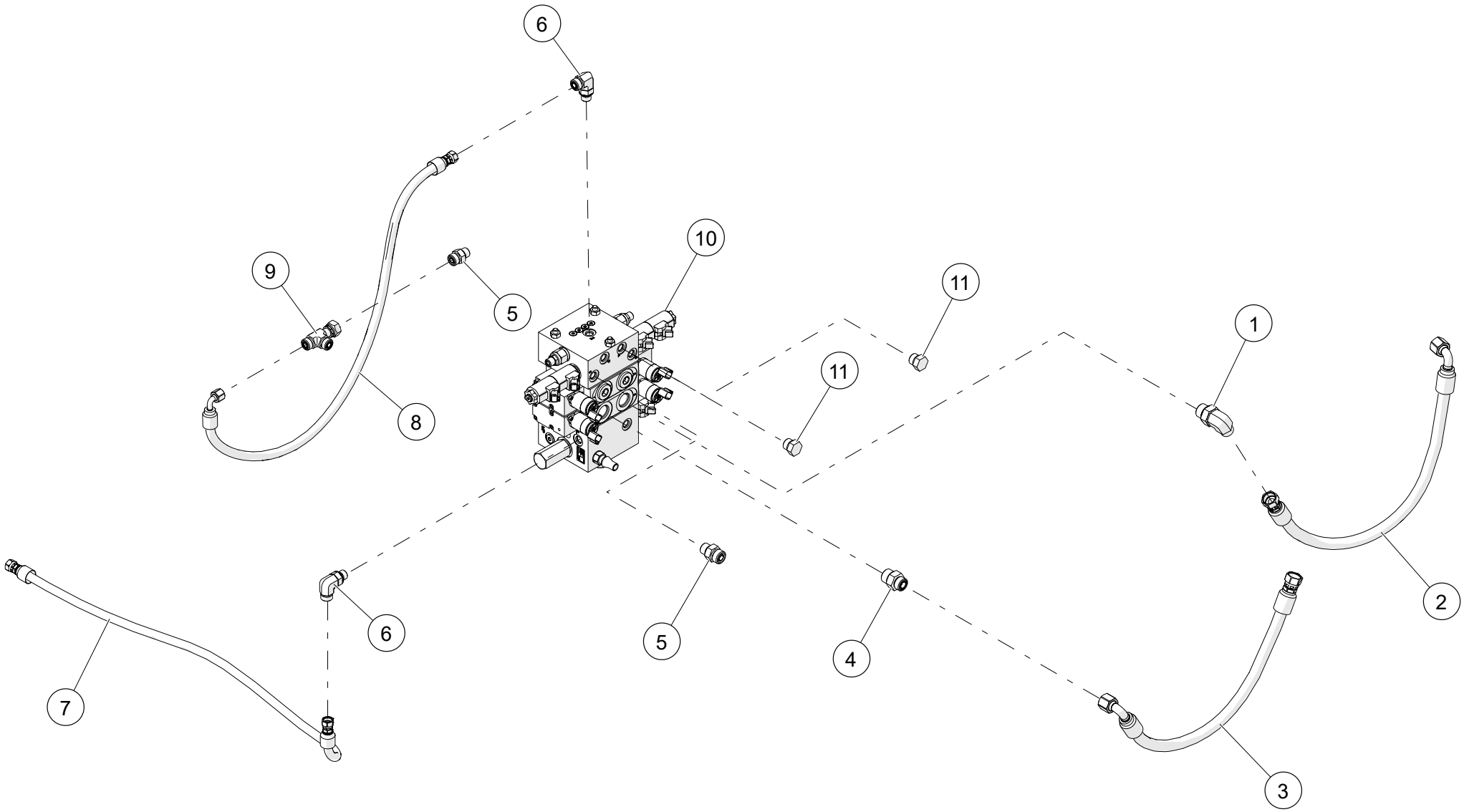

WHEN ORDERING PARTS, SPECIFY MODEL NUMBER, SERIAL NUMBER AND DESCRIPTION OF PARTS REQUIRED

ITEM	PART NUMBER	DESCRIPTION	QUANTITY	NOTES
	8-ASSEMBLY	**FOR REFERENCE ONLY**		
1	1014015	ELBOW, 90, MOFS-10/MORB-12	1	
2	1028014	HOSE,-10,4000,90FOFS-10SW/FOFS-10SW,28.25	1	
3	1028013	HOSE,-10,4000,90FOFS-10SW/FOFS-10SW,25.75	1	
4	1010083	ADAPTER, MOFS-10/MORB-12	1	
5	1010071	ADAPTER, MOFS-6/MORB-6	5	
6	1014001	ELBOW, 90, MOFS-6/MORB-6	6	
7	1027891	HOSE,-6,300,FOFS-6SW/FOFS-6SW,38.0	1	
8	1027884	HOSE, -6, 3000, FOFS-6SW / 90FOFS-6SW, 37.0	1	
9	1018017	TEE, MOFS-6/FOFS-6/MOFS-6	1	
10	1008352	VALVE, SWING	1	
11	1019667	PLUG, HEX, ORB-6	4	

WHEN ORDERING PARTS, SPECIFY MODEL NUMBER, SERIAL NUMBER AND DESCRIPTION OF PARTS REQUIRED

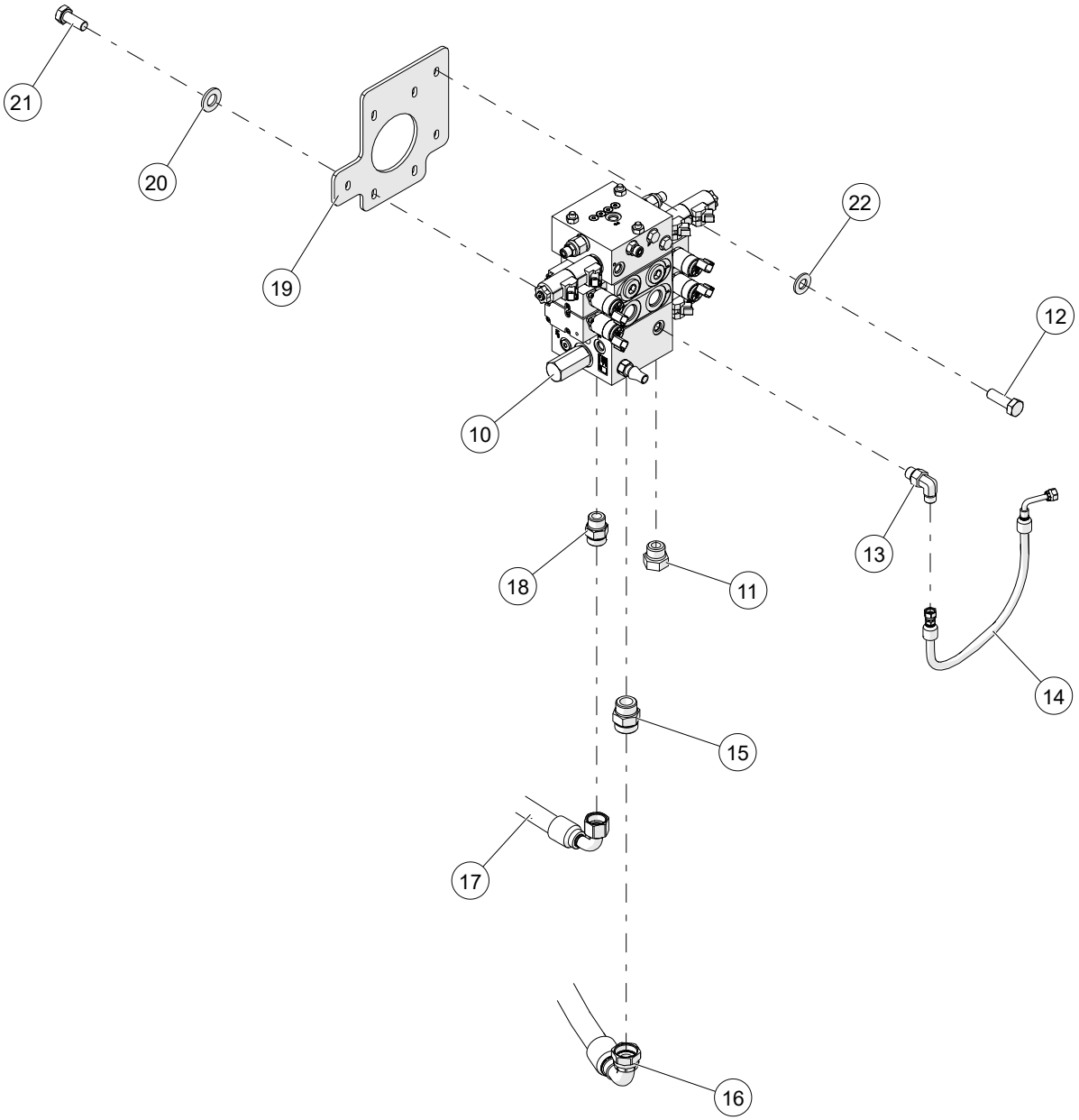

WHEN ORDERING PARTS, SPECIFY MODEL NUMBER, SERIAL NUMBER AND DESCRIPTION OF PARTS REQUIRED

ITEM	PART NUMBER	DESCRIPTION	QUANTITY	NOTES
	8-ASSEMBLY	**FOR REFERENCE ONLY**		
12	HHCS-C313A008Z1	HEX HEAD CAP SCREW, 5/16-18 X 1 LEN, GR8, ZN, FULL THREAD	6	
13	1013998	ELBOW, 90, MOFS-4/MORB-6	1	
14	1027885	HOSE, -4, 3000, FOFS-4SW / L90FOFS-4SW, 20.5	1	
15	1010094	ADAPTER, MOFS-16/MORB-16	1	
16	1027901	HOSE, -16, 3000, FOFS-16SW / 90FOFS-16SW, 48.5	1	
17	1027905	HOSE, -12, 3000, FOFS-12SW / 90FOFS-12SW, 61.5	1	
18	1010088	ADAPTER, MOFS-12/MORB-12	6	
19	1038768	PLATE, VALVE MOUNT	1	
20	WSH1-X10C000XZ0	WASHER, M10, STEEL, ZINC PLATED	8	
21	HHCS-M10C020PZ0	HEX HEAD CAP SCREW, M10-1.5X20, C8.8	8	
22	WSH2-X3130008Z0	SAE WASHER, 5/16, GR8, ZN	6	

WHEN ORDERING PARTS, SPECIFY MODEL NUMBER, SERIAL NUMBER AND DESCRIPTION OF PARTS REQUIRED

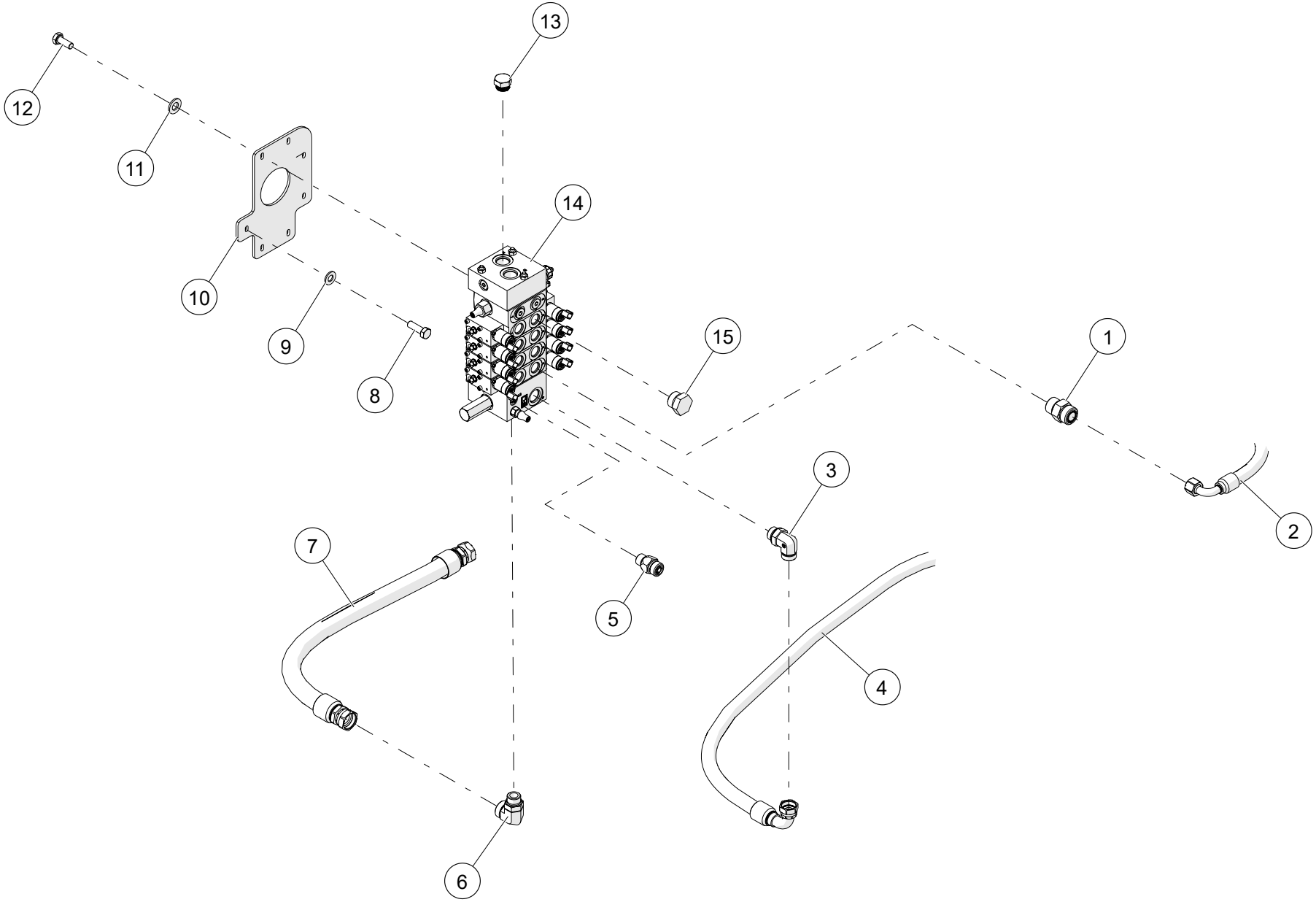

WHEN ORDERING PARTS, SPECIFY MODEL NUMBER, SERIAL NUMBER AND DESCRIPTION OF PARTS REQUIRED

ITEM	PART NUMBER	DESCRIPTION	QUANTITY	NOTES
	9-ASSEMBLY	**FOR REFERENCE ONLY**		
1	1010088	ADAPTER, MOFS-12/MORB-12	6	
2	1028000	HOSE,-12,5000,90FOFS-12SW/FOFS-12SW,130.0	1	
3	1014023	ELBOW, 90, MOFS-16/MORB-16	2	
4	1027902	HOSE, -16, 3000, FOFS-16SW / 90FOFS-16SW, 68.0	1	
5	1008295	VALVE, ORIFICE, MOFS-6/CHECK-5/MORB-6	1	
6	1014027	ELBOW,90,MOFS-20/MORB-16	1	
7	1027945	HOSE, -20, LOW, FOFS-20SW / FOFS-20SW, 38.5	1	
8	HHCS-C313A008Z1	HEX HEAD CAP SCREW, 5/16-18 X 1 LEN, GR8, ZN, FULL THREAD	6	
9	WSH2-X3130008Z0	SAE WASHER, 5/16, GR8, ZN	6	
10	1036191	PLATE, VALVE BLOCK	1	
11	WSH1-X10C000XZ0	WASHER, M10, STEEL, ZINC PLATED	8	
12	HHCS-M10C020PZ0	HEX HEAD CAP SCREW, M10-1.5X20, C8.8	8	
13	1219-569	PLUG, SAE ORB-16	2	
14	1008343	VALVE, BOOM AND WINCH	1	
15	1019670	PLUG, HEX, ORB-12	2	
16	1010092	ADAPTER, MOFS-16/MORB-12	2	
17	1027896	HOSE, -12, 4000, FOFS-12SW / 90FOFS-12SW, 95.5	1	
18	1027892	HOSE,-6,3000,90FOFS-6SW/FOFS-6SW,90.75	1	
19	1027890	HOSE, -6, 3000, FOFS-6SW / 90FOFS-6SW, 136.5	1	
20	1018017	TEE, MOFS-6/FOFS-6/MOFS-6	1	
21	1010071	ADAPTER, MOFS-6/MORB-6	5	
22	1027908	HOSE, -16, 3000, FOFS-16SW / 90FOFS-16SW, 78.5	1	

WHEN ORDERING PARTS, SPECIFY MODEL NUMBER, SERIAL NUMBER AND DESCRIPTION OF PARTS REQUIRED

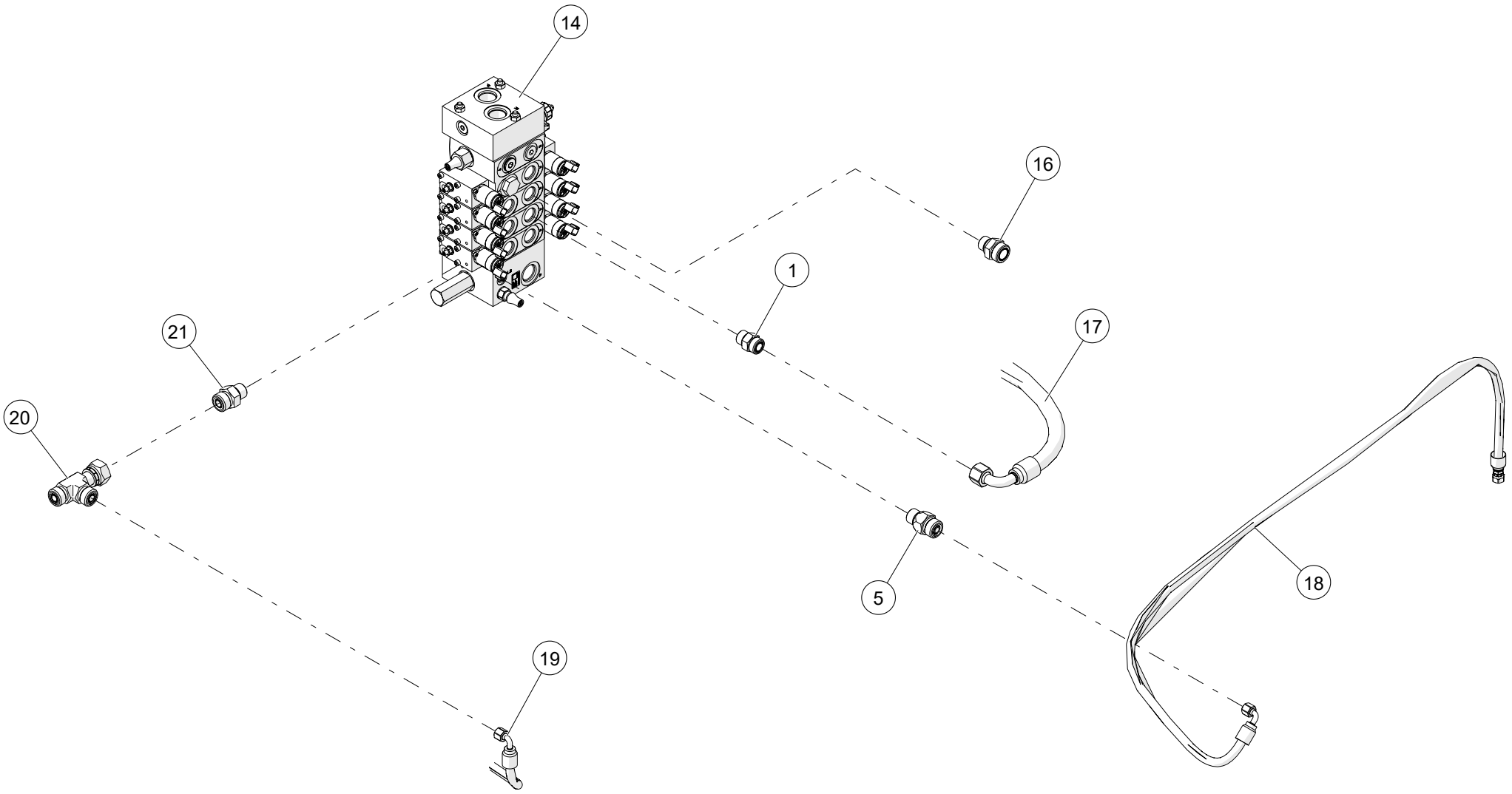

WHEN ORDERING PARTS, SPECIFY MODEL NUMBER, SERIAL NUMBER AND DESCRIPTION OF PARTS REQUIRED

ITEM	PART NUMBER	DESCRIPTION	QUANTITY	NOTES
	9-ASSEMBLY	**FOR REFERENCE ONLY**		
1	1010088	ADAPTER, MOFS-12/MORB-12	6	
2	1028000	HOSE,-12,5000,90FOFS-12SW/FOFS-12SW,130.0	1	
3	1014023	ELBOW, 90, MOFS-16/MORB-16	2	
4	1027902	HOSE, -16, 3000, FOFS-16SW / 90FOFS-16SW, 68.0	1	
5	1008295	VALVE, ORIFICE, MOFS-6/CHECK-5/MORB-6	1	
6	1014027	ELBOW,90,MOFS-20/MORB-16	1	
7	1027945	HOSE, -20, LOW, FOFS-20SW / FOFS-20SW, 38.5	1	
8	HHCS-C313A008Z1	HEX HEAD CAP SCREW, 5/16-18 X 1 LEN, GR8, ZN, FULL THREAD	6	
9	WSH2-X3130008Z0	SAE WASHER, 5/16, GR8, ZN	6	
10	1036191	PLATE, VALVE BLOCK	1	
11	WSH1-X10C000XZ0	WASHER, M10, STEEL, ZINC PLATED	8	
12	HHCS-M10C020PZ0	HEX HEAD CAP SCREW, M10-1.5X20, C8.8	8	
13	1219-569	PLUG, SAE ORB-16	2	
14	1008343	VALVE, BOOM AND WINCH	1	
15	1019670	PLUG, HEX, ORB-12	2	
16	1010092	ADAPTER, MOFS-16/MORB-12	2	
17	1027896	HOSE, -12, 4000, FOFS-12SW / 90FOFS-12SW, 95.5	1	
18	1027892	HOSE,-6,3000,90FOFS-6SW/FOFS-6SW,90.75	1	
19	1027890	HOSE, -6, 3000, FOFS-6SW / 90FOFS-6SW, 136.5	1	
20	1018017	TEE, MOFS-6/FOFS-6/MOFS-6	1	
21	1010071	ADAPTER, MOFS-6/MORB-6	5	
22	1027908	HOSE, -16, 3000, FOFS-16SW / 90FOFS-16SW, 78.5	1	

WHEN ORDERING PARTS, SPECIFY MODEL NUMBER, SERIAL NUMBER AND DESCRIPTION OF PARTS REQUIRED

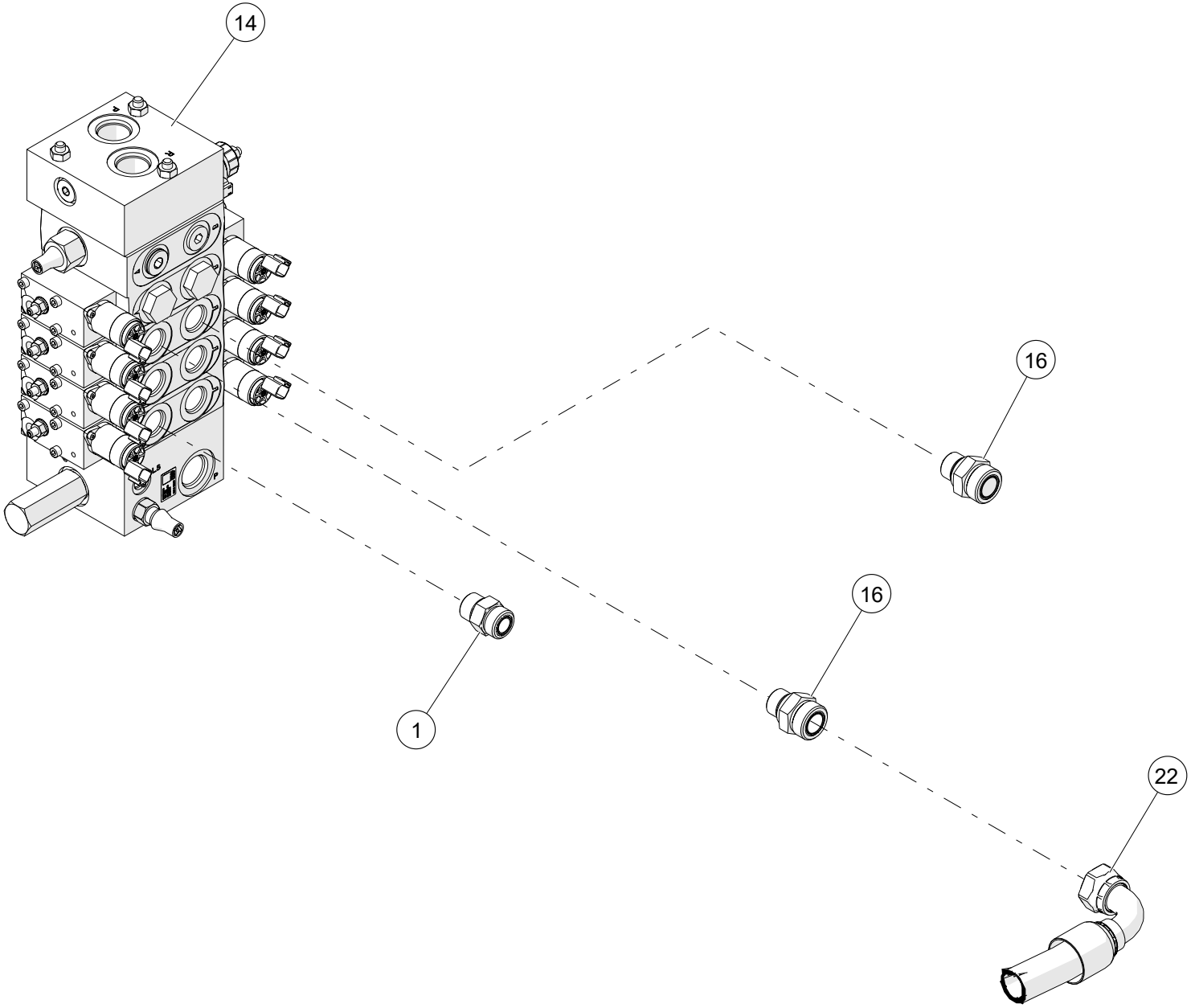

WHEN ORDERING PARTS, SPECIFY MODEL NUMBER, SERIAL NUMBER AND DESCRIPTION OF PARTS REQUIRED

ITEM	PART NUMBER	DESCRIPTION	QUANTITY	NOTES
	9-ASSEMBLY	**FOR REFERENCE ONLY**		
1	1010088	ADAPTER, MOFS-12/MORB-12	6	
2	1028000	HOSE,-12,5000,90FOFS-12SW/FOFS-12SW,130.0	1	
3	1014023	ELBOW, 90, MOFS-16/MORB-16	2	
4	1027902	HOSE, -16, 3000, FOFS-16SW / 90FOFS-16SW, 68.0	1	
5	1008295	VALVE, ORIFICE, MOFS-6/CHECK-5/MORB-6	1	
6	1014027	ELBOW,90,MOFS-20/MORB-16	1	
7	1027945	HOSE, -20, LOW, FOFS-20SW / FOFS-20SW, 38.5	1	
8	HHCS-C313A008Z1	HEX HEAD CAP SCREW, 5/16-18 X 1 LEN, GR8, ZN, FULL THREAD	6	
9	WSH2-X3130008Z0	SAE WASHER, 5/16, GR8, ZN	6	
10	1036191	PLATE, VALVE BLOCK	1	
11	WSH1-X10C000XZ0	WASHER, M10, STEEL, ZINC PLATED	8	
12	HHCS-M10C020PZ0	HEX HEAD CAP SCREW, M10-1.5X20, C8.8	8	
13	1219-569	PLUG, SAE ORB-16	2	
14	1008343	VALVE, BOOM AND WINCH	1	
15	1019670	PLUG, HEX, ORB-12	2	
16	1010092	ADAPTER, MOFS-16/MORB-12	2	
17	1027896	HOSE, -12, 4000, FOFS-12SW / 90FOFS-12SW, 95.5	1	
18	1027892	HOSE,-6,3000,90FOFS-6SW/FOFS-6SW,90.75	1	
19	1027890	HOSE, -6, 3000, FOFS-6SW / 90FOFS-6SW, 136.5	1	
20	1018017	TEE, MOFS-6/FOFS-6/MOFS-6	1	
21	1010071	ADAPTER, MOFS-6/MORB-6	5	
22	1027908	HOSE, -16, 3000, FOFS-16SW / 90FOFS-16SW, 78.5	1	

WHEN ORDERING PARTS, SPECIFY MODEL NUMBER, SERIAL NUMBER AND DESCRIPTION OF PARTS REQUIRED

NON - ILLUSTRATED PAGE

UPPER ELECTRICAL ASSEMBLY

ITEM	PART NUMBER	DESCRIPTION	QUANTITY	NOTES
	1035203	**UPPER ELECTRICAL ASSEMBLY**		
1	1032426	HARNESS UPPER	1	
2	1223-387	HORN 12 VOLT FANFARE	1	
3	1223-770	LIGHT, TRIPLE IDENT, RED	1	
4	200B2007-13	CLAMP, SUPPORT	1	
5	N04-312C000-25	NUT, HEX 0.3125-18, ST SQC G5	1	
6	NYL-190C000-22	NUT, HEX NYL-INS 10-24,ST SQC G2	1	
7	NYL-312C000-25	NUT,HEX NYL-INS 0.312-18,ST SQC G5	1	
8	S01-312CA00-25	SCR, HHCS 0.3125-18X1.00,ST SQC G5	1	
9	SL5-190CA50-20	SCR, CREC RND MS 10-24X1.50,ST SQC	1	
10	SMF-12DM020-E8	SCR, HHCS M12-1.75X20 FT, S-S 18-8	1	
11	T106055	CABLE TIE,STUD MOUNT, 1/4-20	1	
12	T150852	BRACKET, BULKHEAD	1	
13	WAN-31NX000-20	WSH, FL TYPA-NRW 0.3125, ST SQC	1	
14	WAR-190X000-22	WSH, FL TYPA-REG 10, ST SQC G2	1	
15	WBR-31RX875-20	WSH, FL TYPB-REG 0.3125, ST SQC	1	
16	WMF-012X000-E8	WSH, FLAT M12 DIN125, S-S 18-8	1	

WHEN ORDERING PARTS, SPECIFY MODEL NUMBER, SERIAL NUMBER AND DESCRIPTION OF PARTS REQUIRED

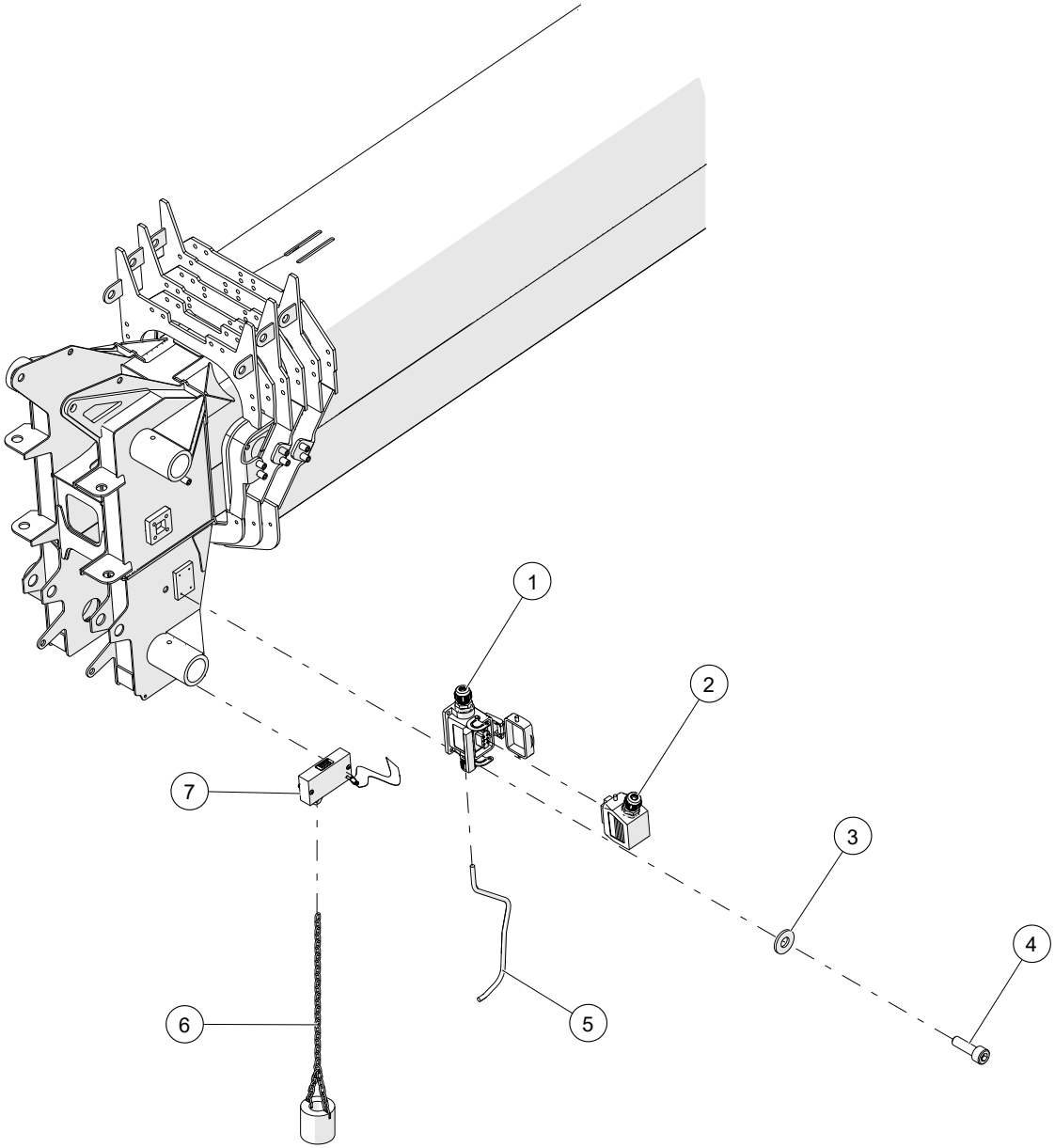

WHEN ORDERING PARTS, SPECIFY MODEL NUMBER, SERIAL NUMBER AND DESCRIPTION OF PARTS REQUIRED

LMI ASSEMBLY

ITEM	PART NUMBER	DESCRIPTION	QUANTITY	NOTES
	1035240	**LMI ASSEMBLY**		
1	T127374	BASE, WEIDMULLER	2	
2	T127379	HOOD, WEIDMULLER	2	
3	WSH2-X1900008Z0	SAE WASHER, #10, GR8, ZN	12	
4	SHCS-C190625AB0	SOCKET HEAD CAP SCREW, 10-24 X 5/8 LEN, BO	12	
5	1031230	50-155 M & 50-155 U LMI CABLE 20 FT	20	
6	717-0882	CTWT W/ CHAIN	1	
7	714-0621	SWITCH, ATB	1	
8	1031331	GREER / RAM MOUNT ASSEMBLY	1	
9	HHCS-C2505005Z0	HEX HEAD CAP SCREW, 1/4-20 X 1/2 LEN, GR5, ZN	10	
10	WSH2-X2500008Z0	SAE WASHER, 1/4, GR8, ZN	10	
11	1031232	P CLAMP	10	
12	HHCS-C3757505Z0	HEX HEAD CAP SCREW, 3/8-16 X 3/4 LEN, GR5, ZN	3	
13	WSH2-X3750008Z0	SAE WASHER, 3/8, GR8, ZN	3	
14	1008421	REEL, LMI	1	
15	1031226	GREER MG6 COMPUTER	1	

WHEN ORDERING PARTS, SPECIFY MODEL NUMBER, SERIAL NUMBER AND DESCRIPTION OF PARTS REQUIRED

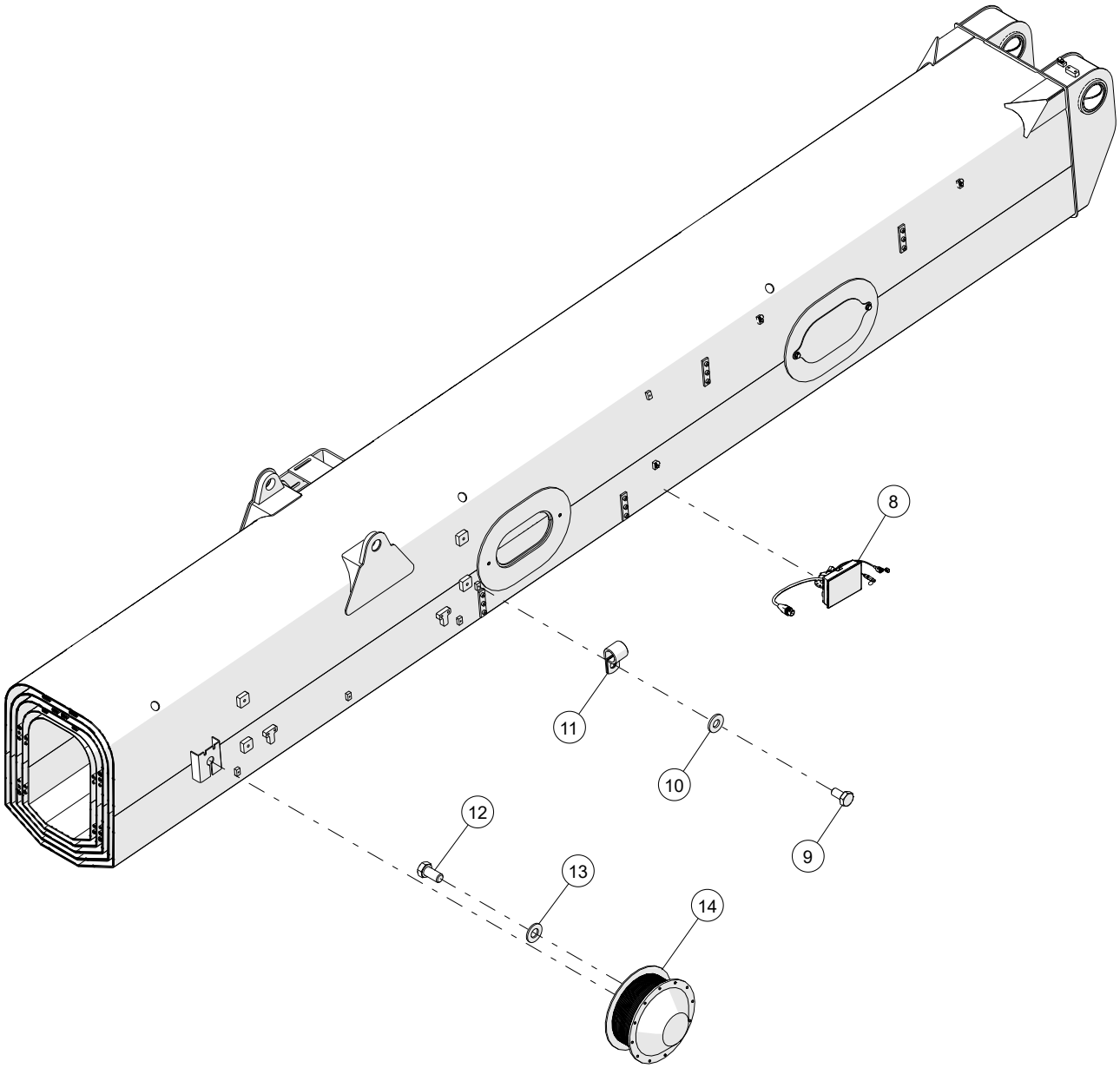

WHEN ORDERING PARTS, SPECIFY MODEL NUMBER, SERIAL NUMBER AND DESCRIPTION OF PARTS REQUIRED

LMI ASSEMBLY

ITEM	PART NUMBER	DESCRIPTION	QUANTITY	NOTES
	1035240	**LMI ASSEMBLY**		
1	T127374	BASE, WEIDMULLER	2	
2	T127379	HOOD, WEIDMULLER	2	
3	WSH2-X1900008Z0	SAE WASHER, #10, GR8, ZN	12	
4	SHCS-C190625AB0	SOCKET HEAD CAP SCREW, 10-24 X 5/8 LEN, BO	12	
5	1031230	50-155 M & 50-155 U LMI CABLE 20 FT	20	
6	717-0882	CTWT W/ CHAIN	1	
7	714-0621	SWITCH, ATB	1	
8	1031331	GREER / RAM MOUNT ASSEMBLY	1	
9	HHCS-C2505005Z0	HEX HEAD CAP SCREW, 1/4-20 X 1/2 LEN, GR5, ZN	10	
10	WSH2-X2500008Z0	SAE WASHER, 1/4, GR8, ZN	10	
11	1031232	P CLAMP	10	
12	HHCS-C3757505Z0	HEX HEAD CAP SCREW, 3/8-16 X 3/4 LEN, GR5, ZN	3	
13	WSH2-X3750008Z0	SAE WASHER, 3/8, GR8, ZN	3	
14	1008421	REEL, LMI	1	
15	1031226	GREER MG6 COMPUTER	1	

WHEN ORDERING PARTS, SPECIFY MODEL NUMBER, SERIAL NUMBER AND DESCRIPTION OF PARTS REQUIRED

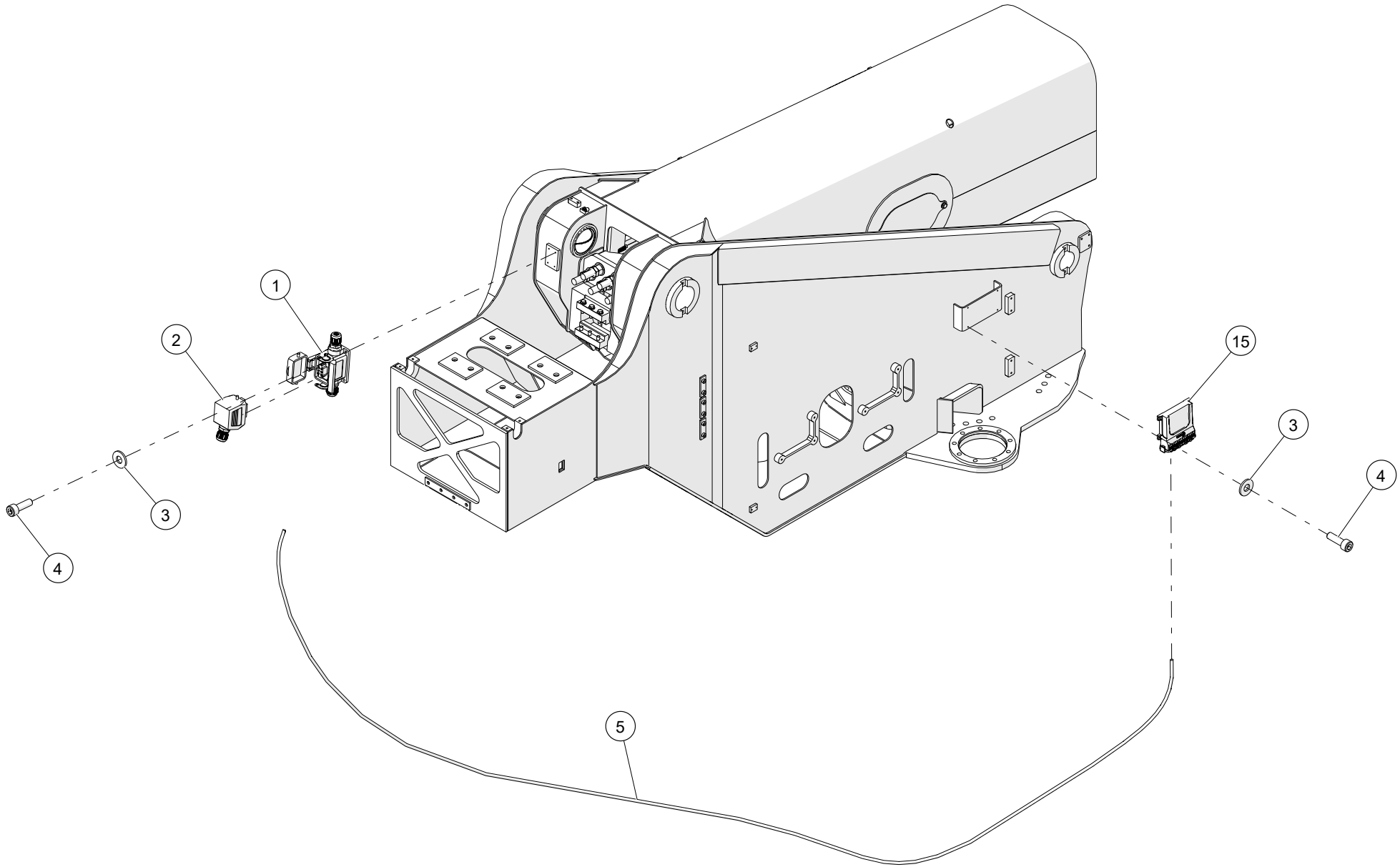

WHEN ORDERING PARTS, SPECIFY MODEL NUMBER, SERIAL NUMBER AND DESCRIPTION OF PARTS REQUIRED

LMI ASSEMBLY

ITEM	PART NUMBER	DESCRIPTION	QUANTITY	NOTES
	1035240	**LMI ASSEMBLY**		
1	T127374	BASE, WEIDMULLER	2	
2	T127379	HOOD, WEIDMULLER	2	
3	WSH2-X1900008Z0	SAE WASHER, #10, GR8, ZN	12	
4	SHCS-C190625AB0	SOCKET HEAD CAP SCREW, 10-24 X 5/8 LEN, BO	12	
5	1031230	50-155 M & 50-155 U LMI CABLE 20 FT	20	
6	717-0882	CTWT W/ CHAIN	1	
7	714-0621	SWITCH, ATB	1	
8	1031331	GREER / RAM MOUNT ASSEMBLY	1	
9	HHCS-C2505005Z0	HEX HEAD CAP SCREW, 1/4-20 X 1/2 LEN, GR5, ZN	10	
10	WSH2-X2500008Z0	SAE WASHER, 1/4, GR8, ZN	10	
11	1031232	P CLAMP	10	
12	HHCS-C3757505Z0	HEX HEAD CAP SCREW, 3/8-16 X 3/4 LEN, GR5, ZN	3	
13	WSH2-X3750008Z0	SAE WASHER, 3/8, GR8, ZN	3	
14	1008421	REEL, LMI	1	
15	1031226	GREER MG6 COMPUTER	1	

WHEN ORDERING PARTS, SPECIFY MODEL NUMBER, SERIAL NUMBER AND DESCRIPTION OF PARTS REQUIRED

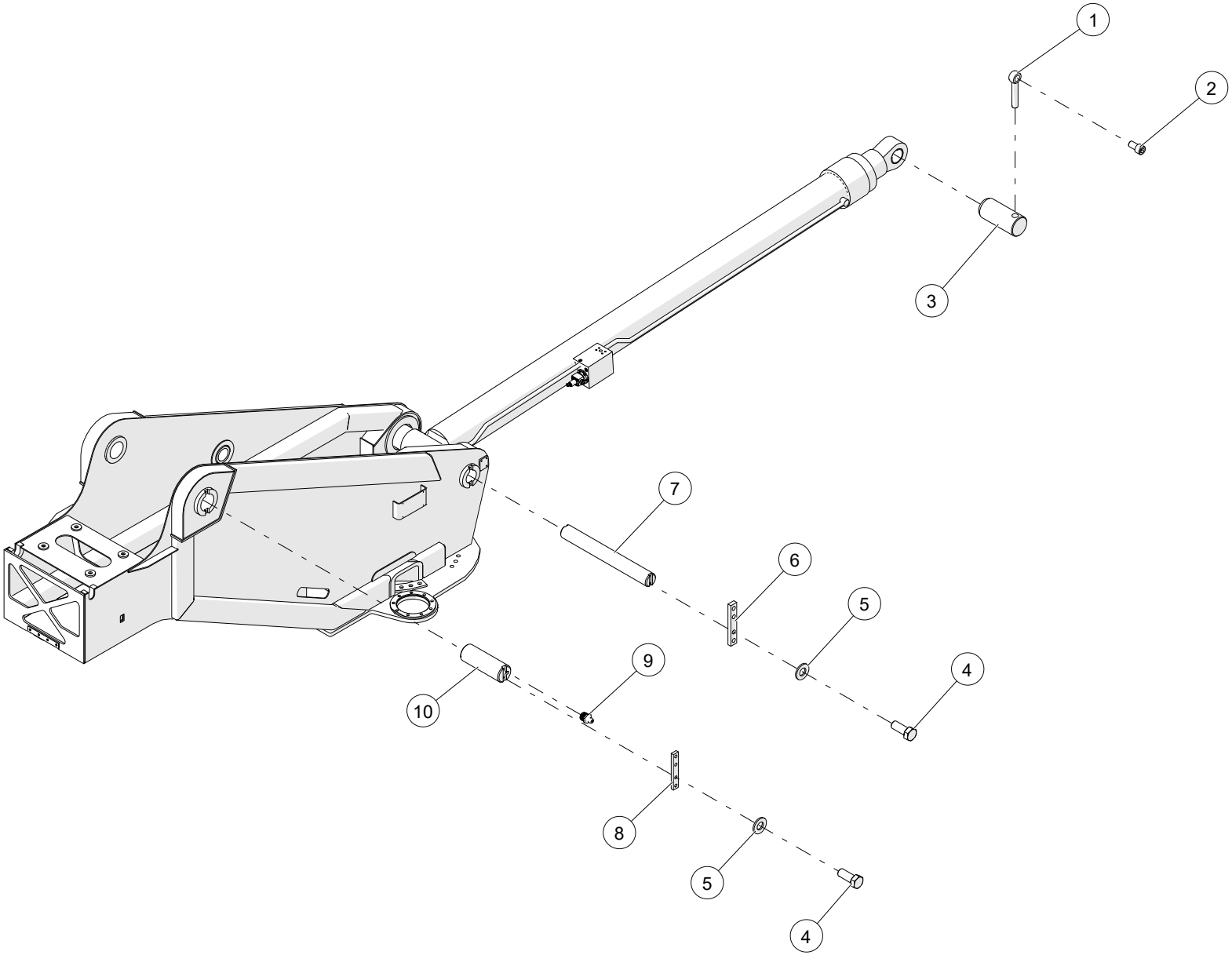

WHEN ORDERING PARTS, SPECIFY MODEL NUMBER, SERIAL NUMBER AND DESCRIPTION OF PARTS REQUIRED

PIN INSTALLATION

ITEM	PART NUMBER	DESCRIPTION	QUANTITY	NOTES
	1033380	**PIN INSTALLATION**		
1	1007159	ROD END, 1/2 DIA X 6" LEN"	1	
2	SHCS-C375B00AB0	SOCKET HEAD CAP SCREW, 3/8-16 X 2 LEN, BO	1	
3	1033384	PIN, UPPER HOIST	1	
4	HHCS-C375A258Z0	HEX HEAD CAP SCREW, 3/8-16 X 1 1/4 LEN, GR8, ZN	16	
5	WSH2-X3750008Z0	SAE WASHER, 3/8, GR8, ZN	16	
6	1033391	PIN RETAINER	2	
7	1033386	PIN, LOWER HOIST	1	
8	1004649	PIN RETAINER	2	
9	1004435	GREASE ZERK, STR 1/8 PTF MALE	2	
10	1033382	PIN, BOOM PIVOT	2	

WHEN ORDERING PARTS, SPECIFY MODEL NUMBER, SERIAL NUMBER AND DESCRIPTION OF PARTS REQUIRED

NON - ILLUSTRATED PAGE

50-155 M & 50-155 U OVERHAUL BALL OPTIONS

ITEM	PART NUMBER	DESCRIPTION	QUANTITY	NOTES
	1035134	**50-155 M & 50-155 U OVERHAUL BALL OPTION**		
1	**1035221**	OHAUL BALL ASSY, 12 TON	1	SEE PAGE 167
2	**1035222**	OHAUL BALL ASSY, 8 TON	1	SEE PAGE 169

WHEN ORDERING PARTS, SPECIFY MODEL NUMBER, SERIAL NUMBER AND DESCRIPTION OF PARTS REQUIRED

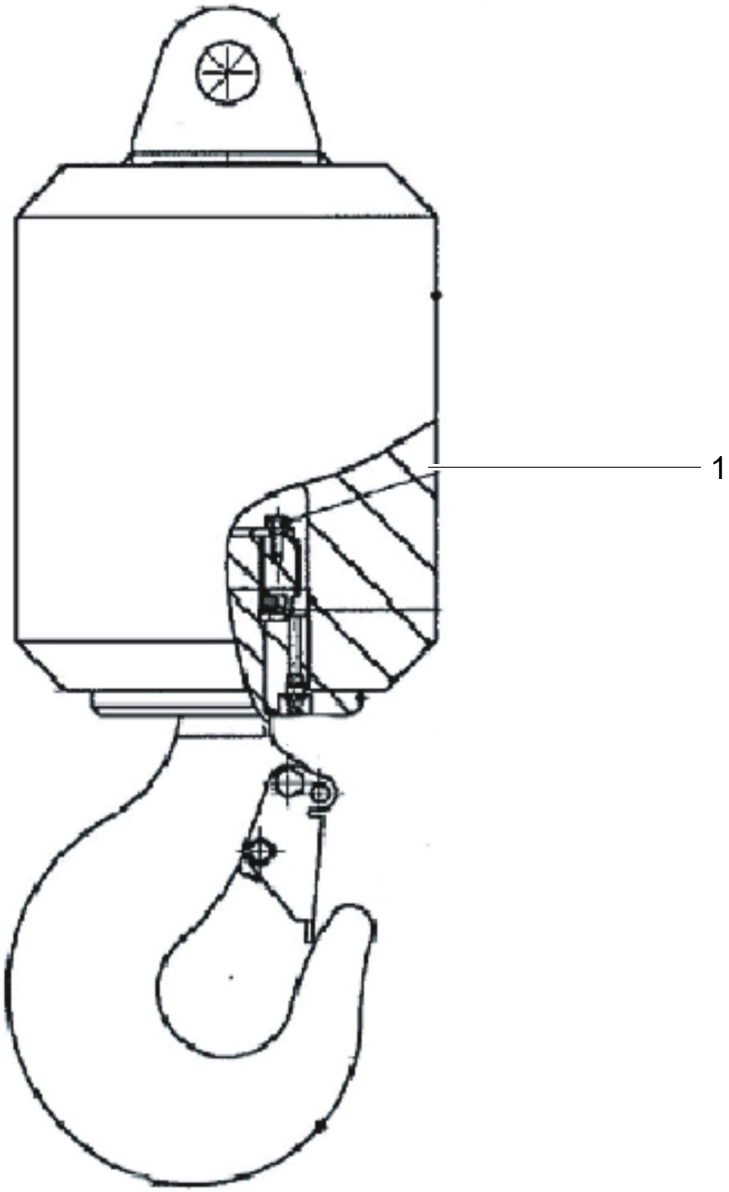

WHEN ORDERING PARTS, SPECIFY MODEL NUMBER, SERIAL NUMBER AND DESCRIPTION OF PARTS REQUIRED

OHAUL BALL ASSY, 12 TON

ITEM	PART NUMBER	DESCRIPTION	QUANTITY	NOTES
	1035221	**OHAUL BALL ASSY, 12 TON**		
1	1034584	BALL, OHAUL, 12T, 286LBS, 5/8IN	1	

WHEN ORDERING PARTS, SPECIFY MODEL NUMBER, SERIAL NUMBER AND DESCRIPTION OF PARTS REQUIRED

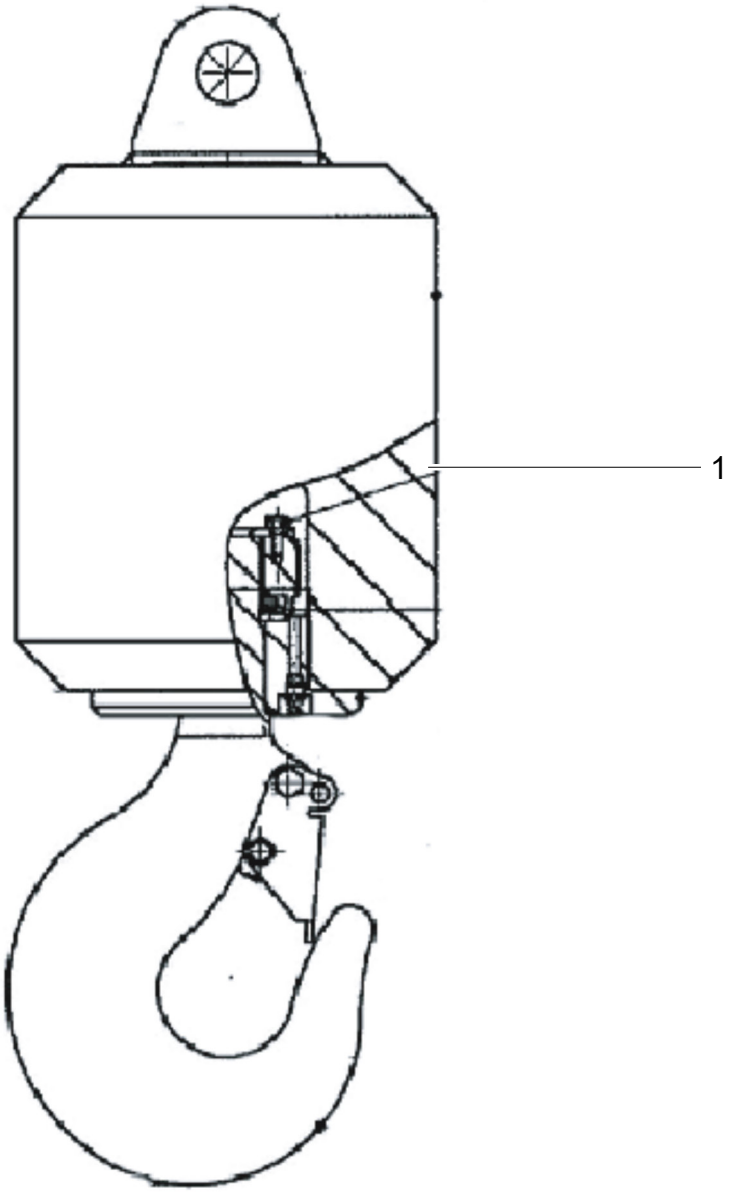

WHEN ORDERING PARTS, SPECIFY MODEL NUMBER, SERIAL NUMBER AND DESCRIPTION OF PARTS REQUIRED

OHAUL BALL ASSY, 8 TON

ITEM	PART NUMBER	DESCRIPTION	QUANTITY	NOTES
	1035222	**OHAUL BALL ASSY, 8 TON**		
1	1034583	BALL, OHAUL, 8T, 220LBS, 5/8IN	1	

WHEN ORDERING PARTS, SPECIFY MODEL NUMBER, SERIAL NUMBER AND DESCRIPTION OF PARTS REQUIRED

NON - ILLUSTRATED PAGE

XO MAIN WINCH CABLE OPTIONS

ITEM	PART NUMBER	DESCRIPTION	QUANTITY	NOTES
	1032739	**XO MAIN WINCH CABLE OPTIONS**		
1	**1029871**	ROTATE-RESIST CABLE 5/8 X 500	1	SEE PAGE 173
2	**717A0841**	STANDARD CABLE 5/8 X 500	1	SEE PAGE 179

WHEN ORDERING PARTS, SPECIFY MODEL NUMBER, SERIAL NUMBER AND DESCRIPTION OF PARTS REQUIRED

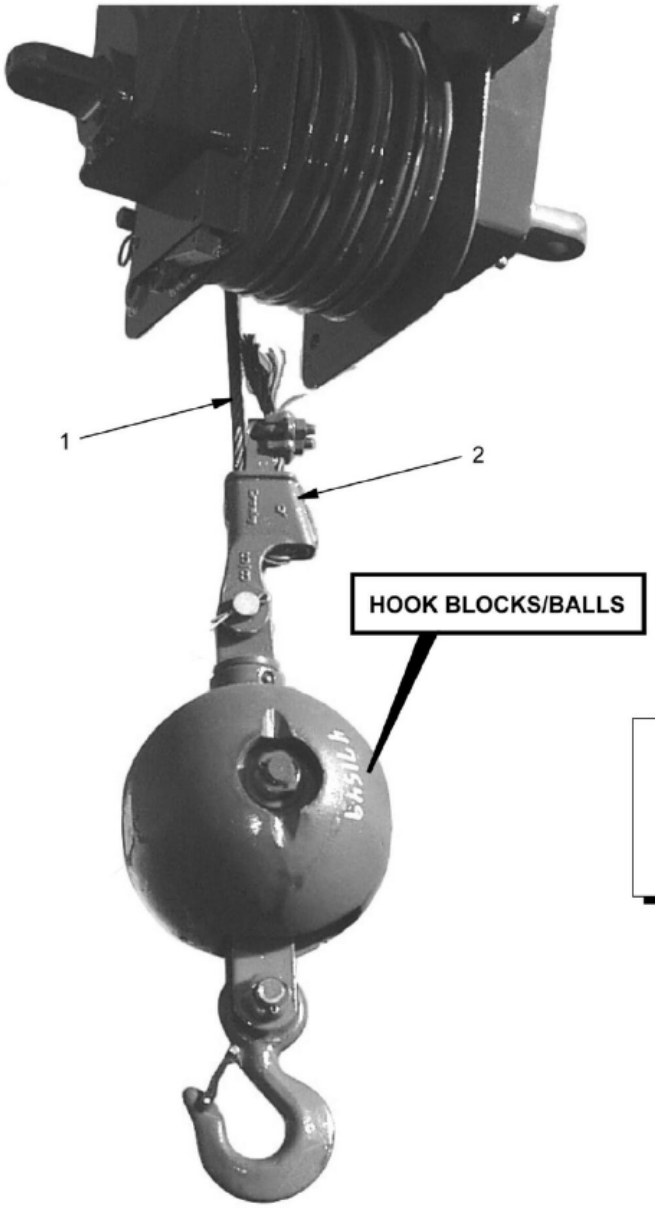

CAUTION

UNDER NO CONDITION CAN ANY OTHER SIZE, TYPE, OR LENGTH OF WIRE ROPE BE USED ON THIS EQUIPMENT SINCE IT CONSTITUTES A SAFETY HAZARD.

- WIRE ROPE -

Standard Wire Rope

5/8" - 35,800 Lbs. Minimum Breaking Strength

- WIRE ROPE - OPTIONAL

Rotation Resistant Wire Rope

5/8" - 45,400 Lbs. Minimum Breaking Strength

WHEN ORDERING PARTS, SPECIFY MODEL NUMBER, SERIAL NUMBER AND DESCRIPTION OF PARTS REQUIRED

ROTATE-RESIST CABLE 5/8 X 500

ITEM	PART NUMBER	DESCRIPTION	QUANTITY	NOTES
	1029871	**ROTATE-RESIST CABLE 5/8 X 500**		
1	1029872	WIRE ROPE 5/8 X 500 NON ROTATE	1	
2	**709A6192**	WEDGE 5/8 MAIN/AUX -CABLE	1	SEE PAGE 175

WHEN ORDERING PARTS, SPECIFY MODEL NUMBER, SERIAL NUMBER AND DESCRIPTION OF PARTS REQUIRED

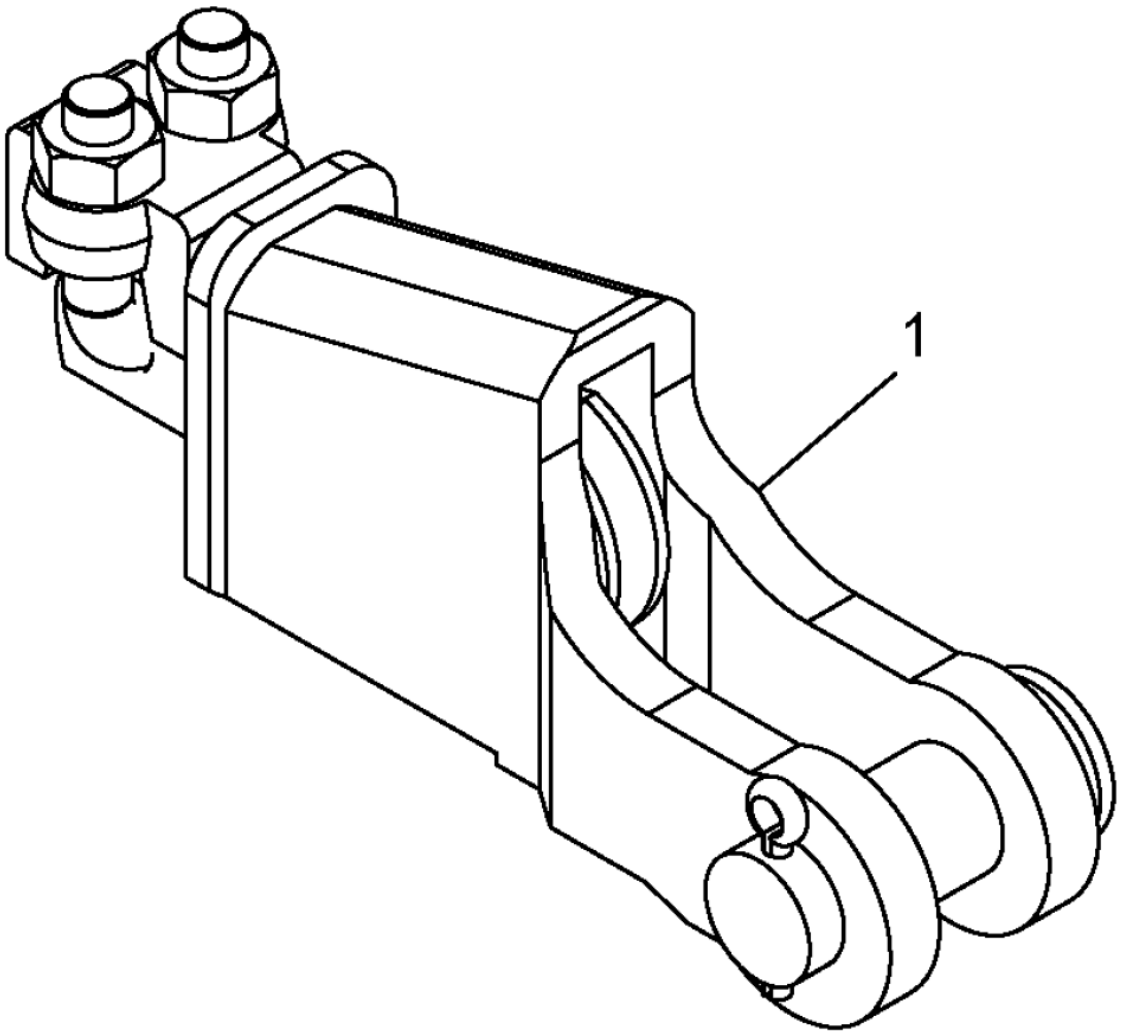

WHEN ORDERING PARTS, SPECIFY MODEL NUMBER, SERIAL NUMBER AND DESCRIPTION OF PARTS REQUIRED

WEDGE 5/8 MAIN/AUX -CABLE

ITEM	PART NUMBER	DESCRIPTION	QUANTITY	NOTES
	709A6192	**WEDGE 5/8 MAIN/AUX -CABLE**		
1	**1234-43**	WEDGE & SOCKET, 5/8 INCH	1	SEE PAGE 177

WHEN ORDERING PARTS, SPECIFY MODEL NUMBER, SERIAL NUMBER AND DESCRIPTION OF PARTS REQUIRED

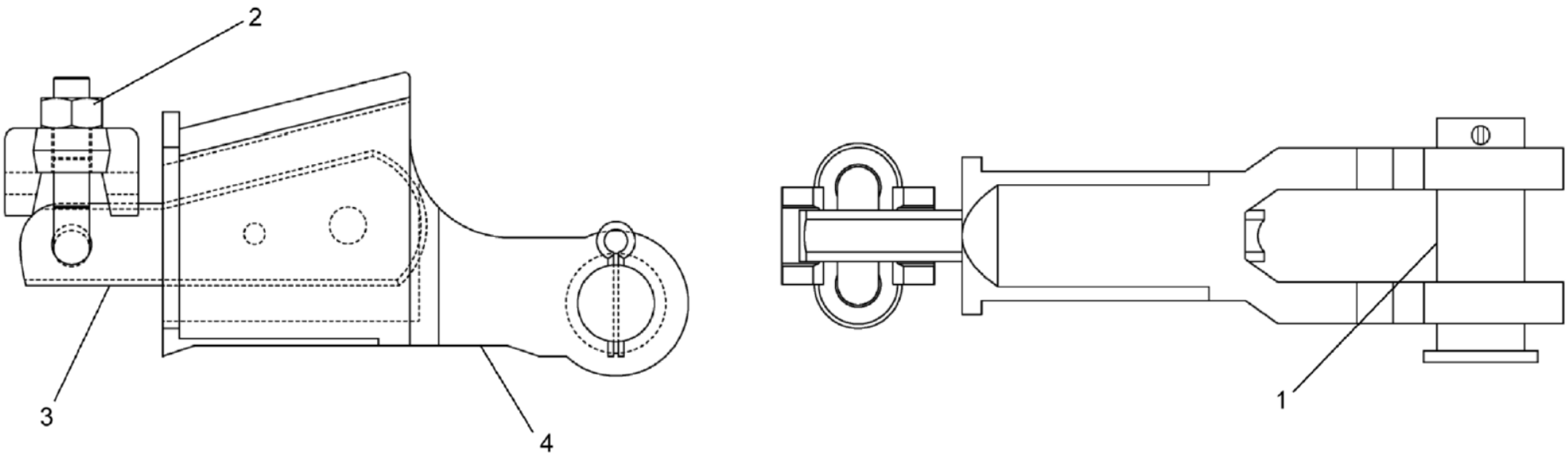

WHEN ORDERING PARTS, SPECIFY MODEL NUMBER, SERIAL NUMBER AND DESCRIPTION OF PARTS REQUIRED

WEDGE & SOCKET, 5/8 INCH

ITEM	PART NUMBER	DESCRIPTION	QUANTITY	NOTES
	1234-43	**WEDGE & SOCKET, 5/8 INCH**		
1	T143912	BOLT & COTTER 5/8" ROPE	1	
2	1240-45	CLAMP "U" BOLT TYPE 5/8 CABLE	1	
3	1234-19	WEDGE	1	
4	1234-18	SOCKET	1	

WHEN ORDERING PARTS, SPECIFY MODEL NUMBER, SERIAL NUMBER AND DESCRIPTION OF PARTS REQUIRED

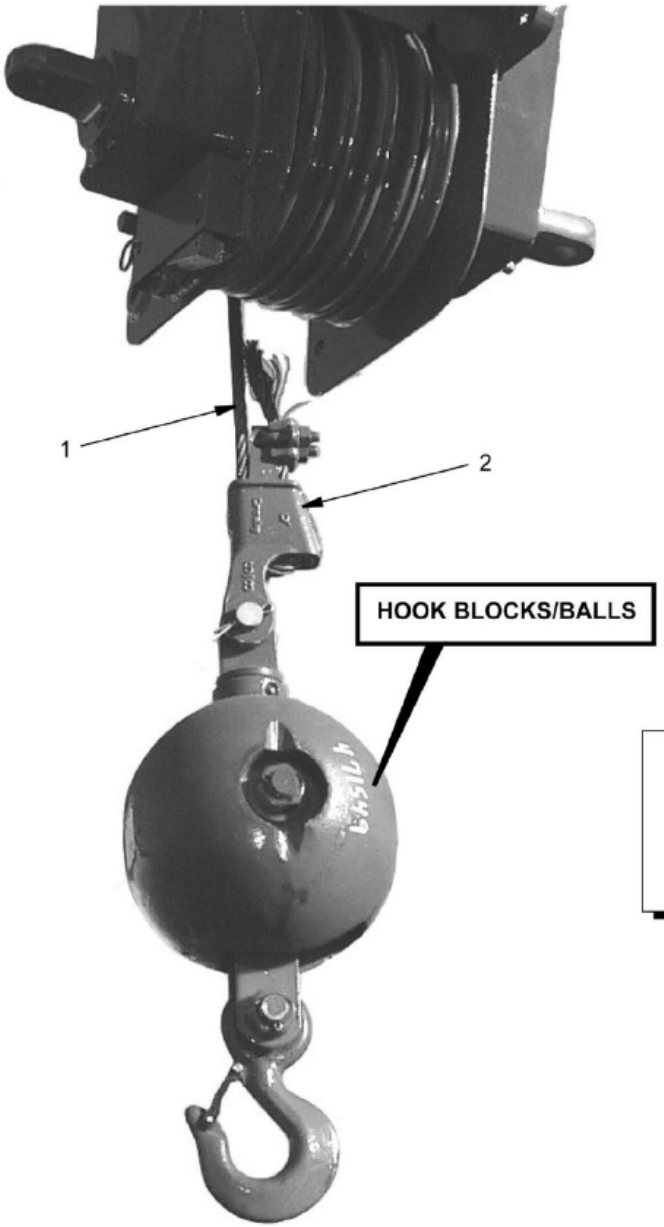

CAUTION

UNDER NO CONDITION CAN ANY OTHER SIZE, TYPE, OR LENGTH OF WIRE ROPE BE USED ON THIS EQUIPMENT SINCE IT CONSTITUTES A SAFETY HAZARD.

- WIRE ROPE -

Standard Wire Rope

5/8" - 35,800 Lbs. Minimum Breaking Strength

- WIRE ROPE - OPTIONAL

Rotation Resistant Wire Rope

5/8" - 45,400 Lbs. Minimum Breaking Strength

WHEN ORDERING PARTS, SPECIFY MODEL NUMBER, SERIAL NUMBER AND DESCRIPTION OF PARTS REQUIRED

STANDARD CABLE 5/8 X 500

ITEM	PART NUMBER	DESCRIPTION	QUANTITY	NOTES
	717A0841	**STANDARD CABLE 5/8 X 500**		
1	12151-500	WIRE ROPE 5/8X500'6X19 IWRC XIPS PERF RH REG LAY 20.6T BRK	1	
2	**709A6192**	WEDGE 5/8 MAIN/AUX -CABLE	1	SEE PAGE 175

WHEN ORDERING PARTS, SPECIFY MODEL NUMBER, SERIAL NUMBER AND DESCRIPTION OF PARTS REQUIRED

NON - ILLUSTRATED PAGE

ROPE OPTIONS

ITEM	PART NUMBER	DESCRIPTION	QUANTITY	NOTES
	1032741	**ROPE OPTIONS**		
1	**1029871**	ROTATE-RESIST CABLE 5/8 X 500	1	SEE PAGE 173
2	**717A0841**	STANDARD CABLE 5/8 X 500	1	SEE PAGE 179

WHEN ORDERING PARTS, SPECIFY MODEL NUMBER, SERIAL NUMBER AND DESCRIPTION OF PARTS REQUIRED

BOOM REST INSTALLATION

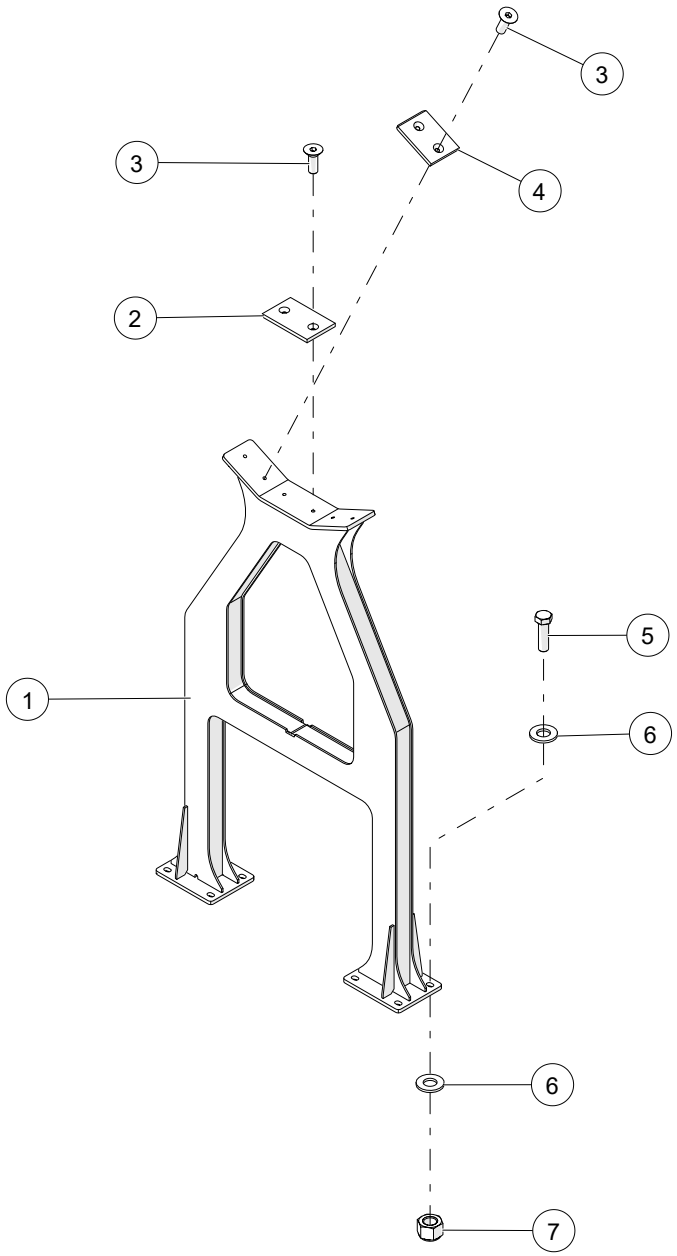

WHEN ORDERING PARTS, SPECIFY MODEL NUMBER, SERIAL NUMBER AND DESCRIPTION OF PARTS REQUIRED

BOOM REST INSTALLATION

ITEM	PART NUMBER	DESCRIPTION	QUANTITY	NOTES
	1029840	**BOOM REST INSTALLATION**		
1	1029835	WELDMENT, BOOM REST	1	
2	1029841	WEAR, BOOM REST BASE	1	
3	SH02-C500750M17B0	SHCS C'SUNK HEAD, 10-24 X 9/16 LEN, ZINC	6	
4	1029842	WEAR, BOOM REST SIDE	2	
5	HHCS-C625B00M03Z0	HEX HEAD CAP SCREW, 1/2-13 X 1 3/4 LEN, GR5, ZINC	8	
6	WSH2-X3130008Z0	SAE WASHER, 5/16, GR8, ZN	16	
7	NUT3-C625000M06Z0	NYLON LOCK NUT, 5/8-11, GR8, ZINC	8	

WHEN ORDERING PARTS, SPECIFY MODEL NUMBER, SERIAL NUMBER AND DESCRIPTION OF PARTS REQUIRED

NON - ILLUSTRATED PAGE

CROSSOVER CONTROLS

ITEM	PART NUMBER	DESCRIPTION	QUANTITY	NOTES
	1031357	**CROSSOVER CONTROLS**		
1	1027049	IQAN MD4 10" DISPLAY	1	
2	1027050	IQAN MC43 I/O	3	
3	1027051	HMI 2X4 KEYPAD RIGHT	1	
4	1027052	GS LH JOYSTICK	1	
5	1027053	GS RH JOYSTICK	1	
6	1027054	GS LIGHT BAR	1	
7	1027055	EATON CAN RELAY MRFRM	1	
8	1027056	2X2 FBO KEYPAD	1	
9	1027057	IQAN G11 BLUETOOTH ADAPTER	1	
10	1027058	P&G LEVEL SENSOR	1	
11	1027213	GS BUZZER WITH RESISTOR	1	
12	1031326	DUAL USB CHARGE PORT	1	
13	1031327	BINDING POSTS	1	
14	1031328	IP 120 CAMERA	1	
15	1031329	HMI 2X4 KEYPAD LEFT	1	
16	1032556	LEFT AXIOMATIC JOYSTICK THUMPER	1	
17	1032776	RIGHT AXIOMATIC JOYSTICK THUMPER	1	
18	1034075	M12 CABLE	1	

WHEN ORDERING PARTS, SPECIFY MODEL NUMBER, SERIAL NUMBER AND DESCRIPTION OF PARTS REQUIRED

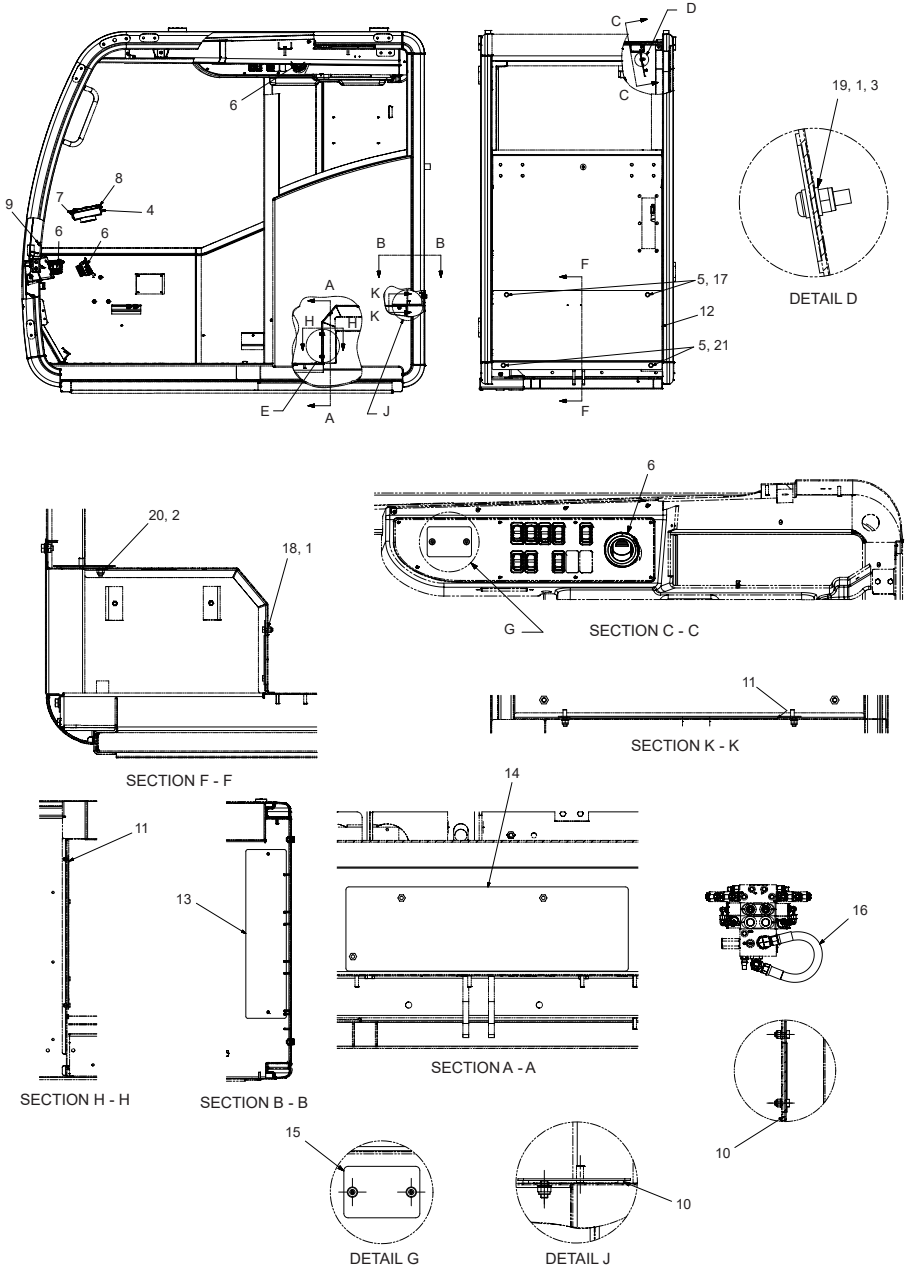

WHEN ORDERING PARTS, SPECIFY MODEL NUMBER, SERIAL NUMBER AND DESCRIPTION OF PARTS REQUIRED

CAB COVERS - NO HEATER OPTION

ITEM	PART NUMBER	DESCRIPTION	QUANTITY	NOTES
	1027154	**CAB COVERS - NO HEATER OPTION**		
1	NYM-06AM000-Y8	HEX NUT, NYLON INSERT METRIC	5	
2	NYM-08BM000-Y8	HEX NUT, NYLON INSERT METRIC	2	
3	S46-06AM020-B0	BHSHCS, M6 -1.0 X 20, BLK OX, C8.8	2	
4	SL3-190XA00-20	SCREW, SHEET METAL # 10 - 12, STZ	2	
5	SMF-10CM018-28	SCR, HHCS M10- 1.5 X 18 FT, ST Z 8.8	4	
6	T111895	VENT, CIRCULAR LOUVERED	3	
7	T111908	ADAPTER, HOSE - RECTANGULAR VENT	1	
8	T111909	VENT, LOUVERED RECTANGULAR	1	
9	T111910	VENT, DEFROST	3	
10	T118275-18	FOAM, RUBBER STRIP	4	
11	T118275-4	FOAM, RUBBER STRIP	4	
12	T135300	COVER, CAB REAR	1	
13	T135303	COVER, TOP OPENING	1	
14	T135304	COVER, FRONT OPENING	1	
15	T135305	PLATE, COVER	1	
16	T158623	HOSE, -12, 150, FJIC-12SW/FOFS-12SW, 500	1	
17	WMF-010X000-20	WSH, FLAT M10 DIN125, ST Z	2	
18	WMF-60MX000-20	WSH, FLAT M6 DIN125, ST SQC	3	
19	WMF-60MX000-BX	WSH, FLAT M6 DIN125, STL BLK OX	4	
20	WMF-80MX000-20	WSH, FLAT M8 DIN125, ST Z	2	
21	WMH-010X000-P0	WSH, FLAT, HARD M10 D125, STL	2	

WHEN ORDERING PARTS, SPECIFY MODEL NUMBER, SERIAL NUMBER AND DESCRIPTION OF PARTS REQUIRED

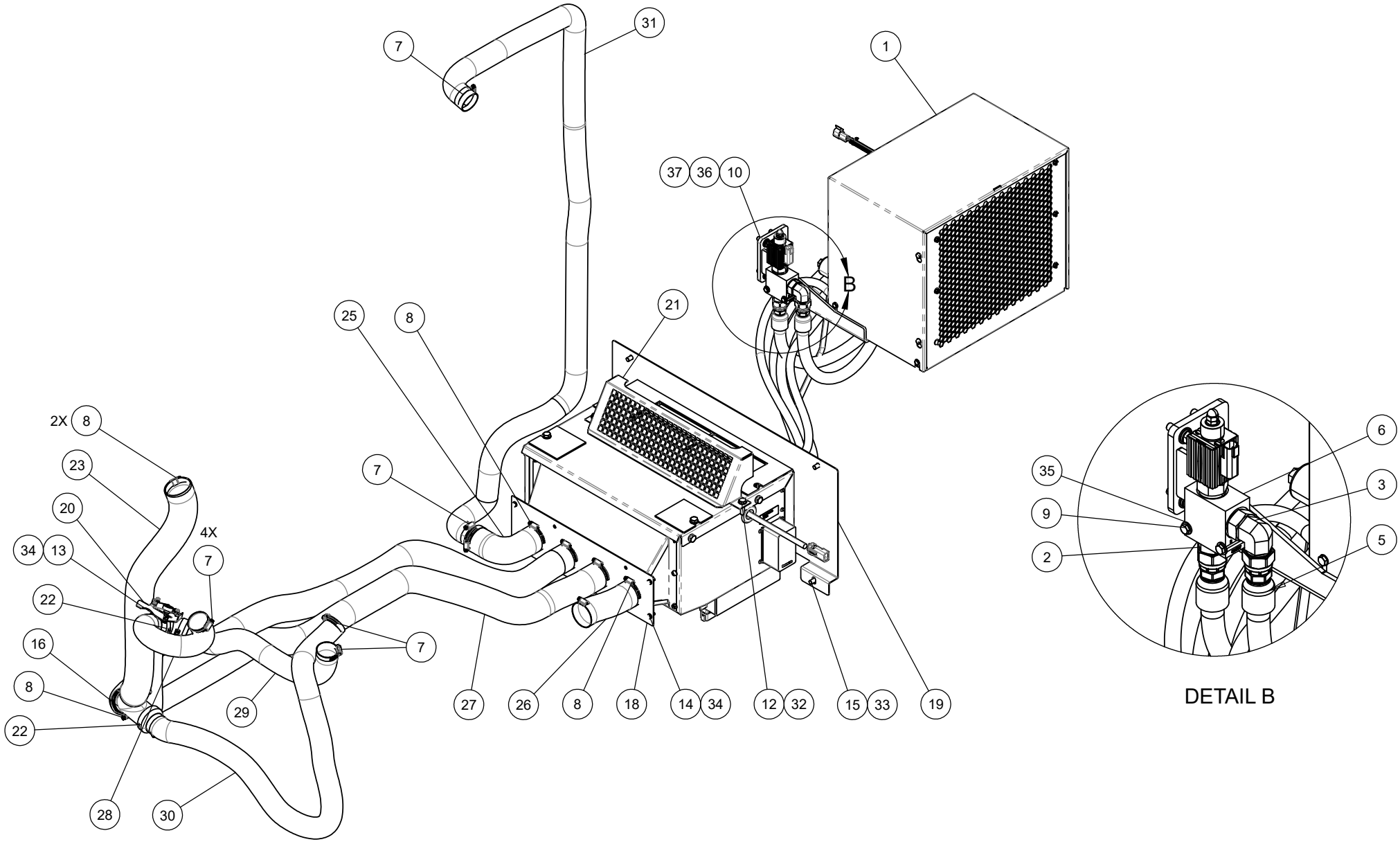

WHEN ORDERING PARTS, SPECIFY MODEL NUMBER, SERIAL NUMBER AND DESCRIPTION OF PARTS REQUIRED

ITEM	PART NUMBER	DESCRIPTION	QUANTITY	NOTES
	1032800	**DELUXE AC AND FLAMELESS HEATER**		
1	**1008363**	HVAC KIT	1	SEE PAGE 193
2	1010088	ADAPTER, MOFS-12/MORB-12	1	
3	1014019	ELBOW, 90, MOFS-12/MORB-12	1	
4	1018023	TEE, MOFS-12/FOFS-12/MOFS-12	2	
5	1027988	HOSE, -12, 3000, FOFS-12SW / 90FOFS-12SW, 32.75	2	
6	1036581	VALVE, 2-WAY	1	
7	1240-28	CLAMP, WORM DRIVE, -24	8	
8	1240-97	2.5" ID - CLAMP, WORM DRIVE	10	
9	HHCS-C250B508R0	HEX HEAD CAP SCREW, 1/4-20 X 2 1/2 LEN, GR8, NF	2	
10	HHCS-C375A258Z0	HEX HEAD CAP SCREW, 3/8-16 X 1 1/4 LEN, GR8, ZN	8	
11	NUT3-C2500008Z0	NYLON LOCK NUT, 1/4-20, GR8, ZN	2	
12	S07-10CM035-28	SCR,HHCS M10-1.5X35 PT,ST SQC C8.8	4	
13	SMF-06AM012-28	SCR, HHCS M6-1X12 FT, ST SQC C8.8	1	
14	SMF-06AM016-28	SCR, HHCS M6-1X16 FT, ST SQC C8.8	4	
15	SMF-10CM018-28	SCR, HHCS M10-1.5X18 FT,ST SQC C8.8	4	
16	T111896	ADAPTER, Y, HVAC	1	
17	T112359	REDUCER, HVAC, 2.5-2	1	
18	T126121	PLATE, HVAC ADAPTER	1	

WHEN ORDERING PARTS, SPECIFY MODEL NUMBER, SERIAL NUMBER AND DESCRIPTION OF PARTS REQUIRED

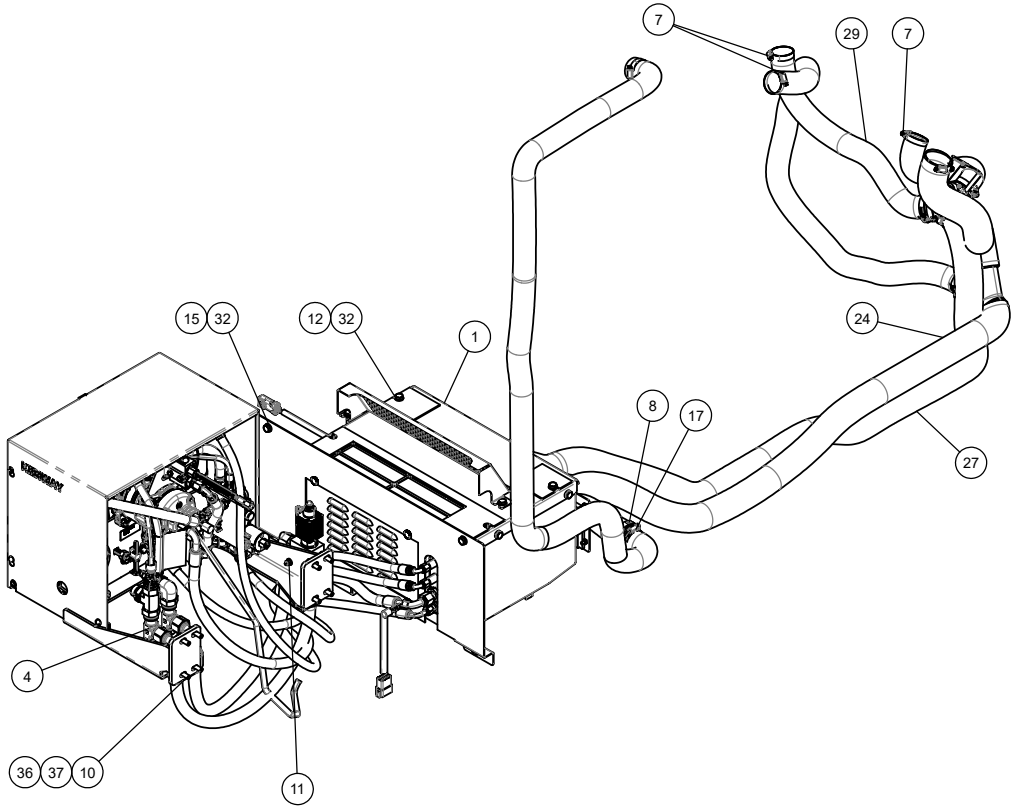

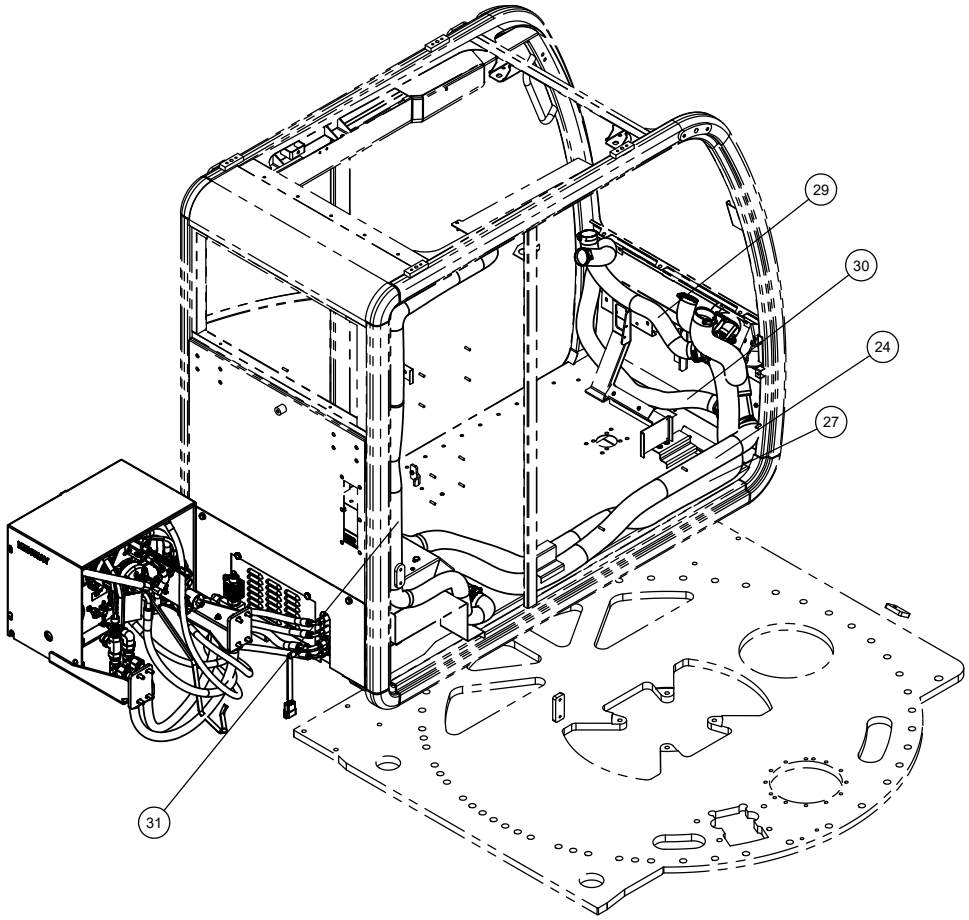

WHEN ORDERING PARTS, SPECIFY MODEL NUMBER, SERIAL NUMBER AND DESCRIPTION OF PARTS REQUIRED

ITEM	PART NUMBER	DESCRIPTION	QUANTITY	NOTES
	1032800	**DELUXE AC AND FLAMELESS HEATER**		
19	T126251	COVER, CAB REAR	1	
20	T126347	DAMPER, INLINE "Y"	1	
21	T126350	PANEL, RECIRC	1	
22	T126413	REDUCER, HVAC. 2.5-2	3	
23	T135435-30	HOSE, HVAC VENT, 2.5IN ID	1	
24	T135435-60	HOSE, HVAC VENT, 2.5IN ID	1	
25	T135435-7.88-01	HOSE, HVAC VENT, 2.5IN ID	1	
26	T135435-7.88-02	HOSE, HVAC VENT, 2.5IN ID	1	
27	T135435-70	HOSE, HVAC VENT, 2.5IN ID	1	
28	T135436-16.13	HOSE, HVAC VENT, 2.0IN ID	1	
29	T135436-33.88	HOSE, HVAC VENT, 2.0IN ID	1	
30	T135436-50	HOSE, HVAC VENT, 2.0IN ID	1	
31	T135436-89.75-1	HOSE, HVAC VENT, 2.0IN ID	1	
32	WMF-010X000-20	WSH, FLAT, HARD M10 D125, ST Z	6	
33	WMF-010X000-P0	WSH, FLAT M10 DIN125 STL	2	
34	WMF-60MX000-20	WSH, FLAT M6 DIN125, ST SQC	5	
35	WSH2-X2500008Z0	SAE WASHER, 1/4, GR8, ZN	4	
36	WSH2-X3750008Z0	SAE WASHER, 3/8, GR8, ZN	8	
37	WSH4-X3750008Z0	SPIRAL LOCK WASHER, 3/8, GR8, ZN	8	

WHEN ORDERING PARTS, SPECIFY MODEL NUMBER, SERIAL NUMBER AND DESCRIPTION OF PARTS REQUIRED

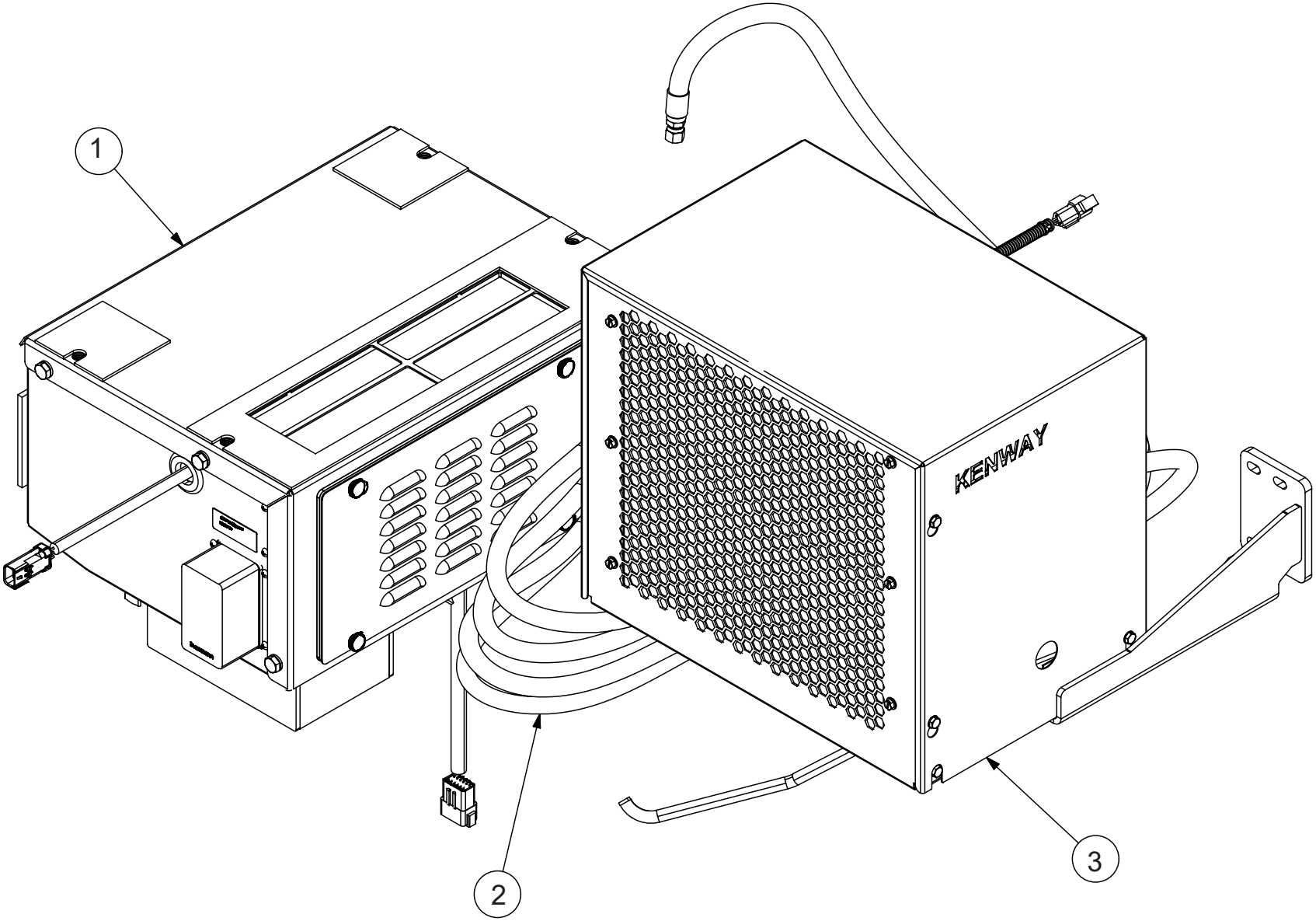

WHEN ORDERING PARTS, SPECIFY MODEL NUMBER, SERIAL NUMBER AND DESCRIPTION OF PARTS REQUIRED

HVAC KIT

ITEM	PART NUMBER	DESCRIPTION	QUANTITY	NOTES
	1008363	**HVAC KIT**		
1	**T133388**	BLOWER UNIT	1	SEE PAGE 195
2	**T133389**	KIT, HOSE & DRIVE MOUNTING	1	SEE PAGE 201
3	**T135299**	HYDRAULIC DRIVE UNIT	1	SEE PAGE 205

WHEN ORDERING PARTS, SPECIFY MODEL NUMBER, SERIAL NUMBER AND DESCRIPTION OF PARTS REQUIRED

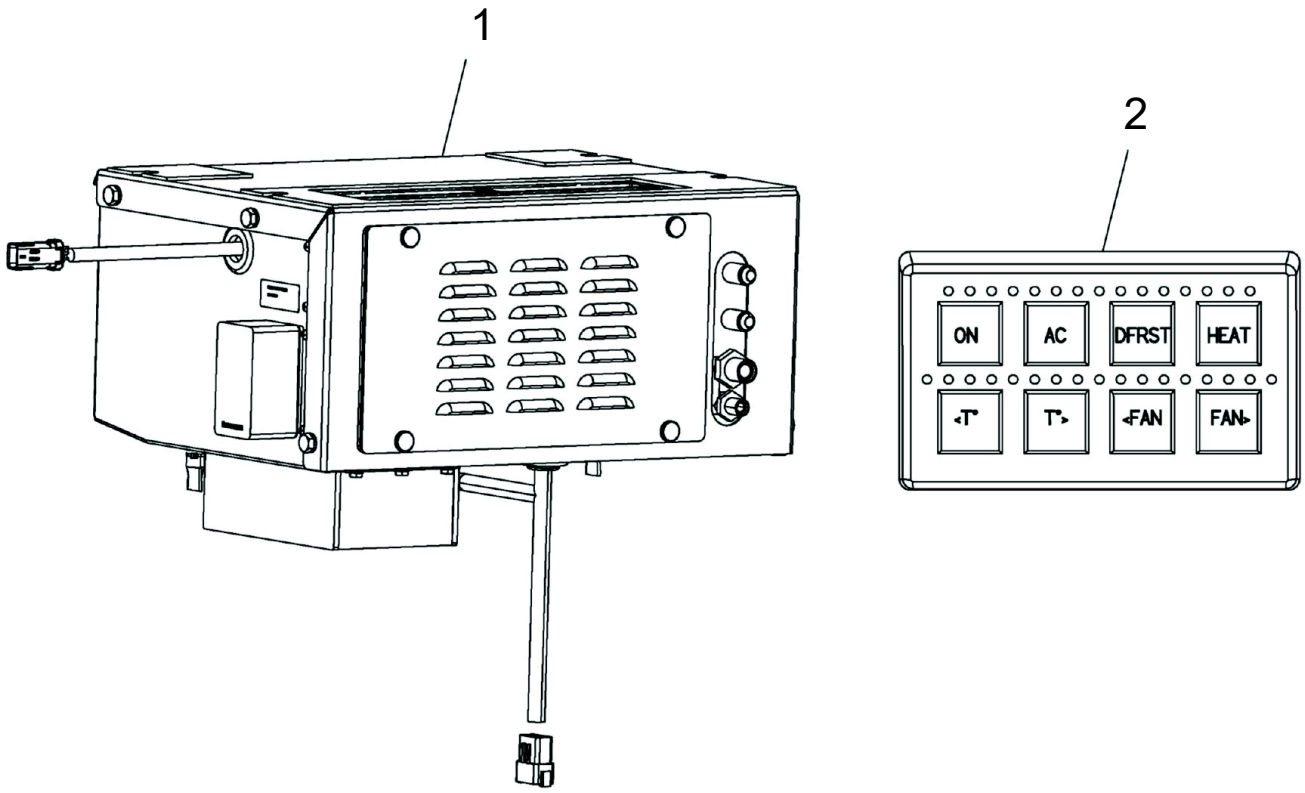

WHEN ORDERING PARTS, SPECIFY MODEL NUMBER, SERIAL NUMBER AND DESCRIPTION OF PARTS REQUIRED

BLOWER UNIT

ITEM	PART NUMBER	DESCRIPTION	QUANTITY	NOTES
	T133388	**BLOWER UNIT**		
1	**230136**	BLOWER ASSEMBLY, AC & OIL HEAT	1	SEE PAGE 197
2	229865	KEYPAD 2 X 4	1	

WHEN ORDERING PARTS, SPECIFY MODEL NUMBER, SERIAL NUMBER AND DESCRIPTION OF PARTS REQUIRED

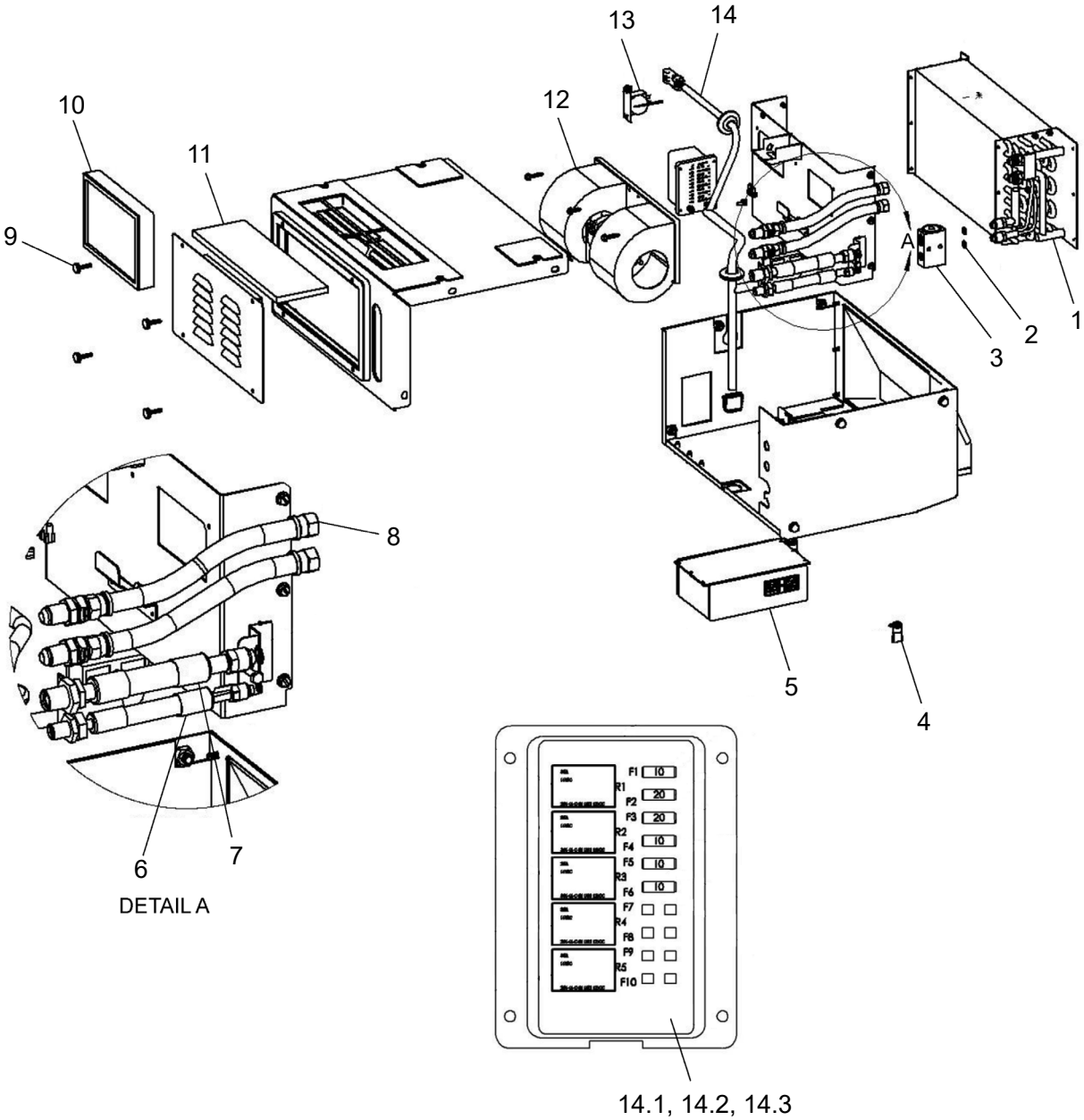

WHEN ORDERING PARTS, SPECIFY MODEL NUMBER, SERIAL NUMBER AND DESCRIPTION OF PARTS REQUIRED

BLOWER ASSEMBLY, AC & OIL HEAT

ITEM	PART NUMBER	DESCRIPTION	QUANTITY	NOTES
	230136	**BLOWER ASSEMBLY, AC & OIL HEAT**		
1	228858	COIL, OIL HEAT/COOL 9 X 15	1	
2	215839	O-RING, REFRIG. #8	2	
3	219736	VALVE, EXP. BLOCK	1	
4	219925	TUBE, KAZOO DRAIN VALVE	2	
5	**230137**	CONTROLLER, PROGRAMMED	1	SEE PAGE 199
6	228852	HOSE ASSEMBLY, #6 TXV -BULKHEAD	1	
6.1	219792	O-RING, REFRIG. #6	1	
7	228849	HOSE, ASSEMBLY, #10 TXV - BULKHEAD	1	
7.1	220107	O-RING, REFRIG. #10	1	
8	228859	HOSE ASSEMBLY, HYD COIL-BLKHD	1	
9	230138	KNOB, 1/4-20 X 1”	4	
10	226966	FILTER, PAPER	1	
11	226965	FILTER, RECIRC FOAM	1	
12	226962	BLOWER ASSEMBLY 12V (HP) W/ 4 SP RES	1	
13	219733	THERMOSTAT, FIXED	1	
14	230139	HARNESS & FUSE PANEL ASSEMBLY	1	
14.1	228277	RELAY, 12V MICRO 280	5	
14.2	228278	FUSE, MINI/ ATM 10 AMP	4	
14.3	228279	FUSE, MINI/ ATM 20 AMP	2	

WHEN ORDERING PARTS, SPECIFY MODEL NUMBER, SERIAL NUMBER AND DESCRIPTION OF PARTS REQUIRED

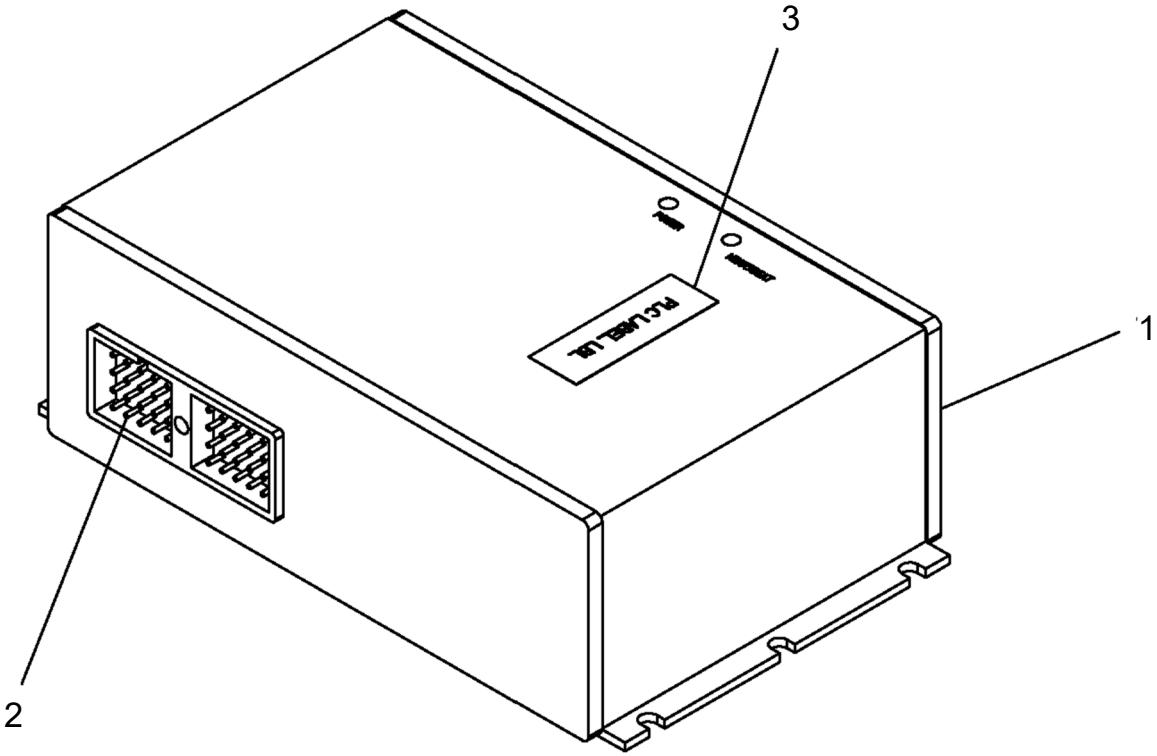

WHEN ORDERING PARTS, SPECIFY MODEL NUMBER, SERIAL NUMBER AND DESCRIPTION OF PARTS REQUIRED

CONTROLLER, PROGRAMMED

ITEM	PART NUMBER	DESCRIPTION	QUANTITY	NOTES
	230137	**CONTROLLER, PROGRAMMED**		
1	221881	CONTROLLER, PROGRAMMABLE	1	
2	230140	PROGRAM, PLC TXCR508	1	
3	222863	LABEL, PAPER- PLC ID	1	

WHEN ORDERING PARTS, SPECIFY MODEL NUMBER, SERIAL NUMBER AND DESCRIPTION OF PARTS REQUIRED

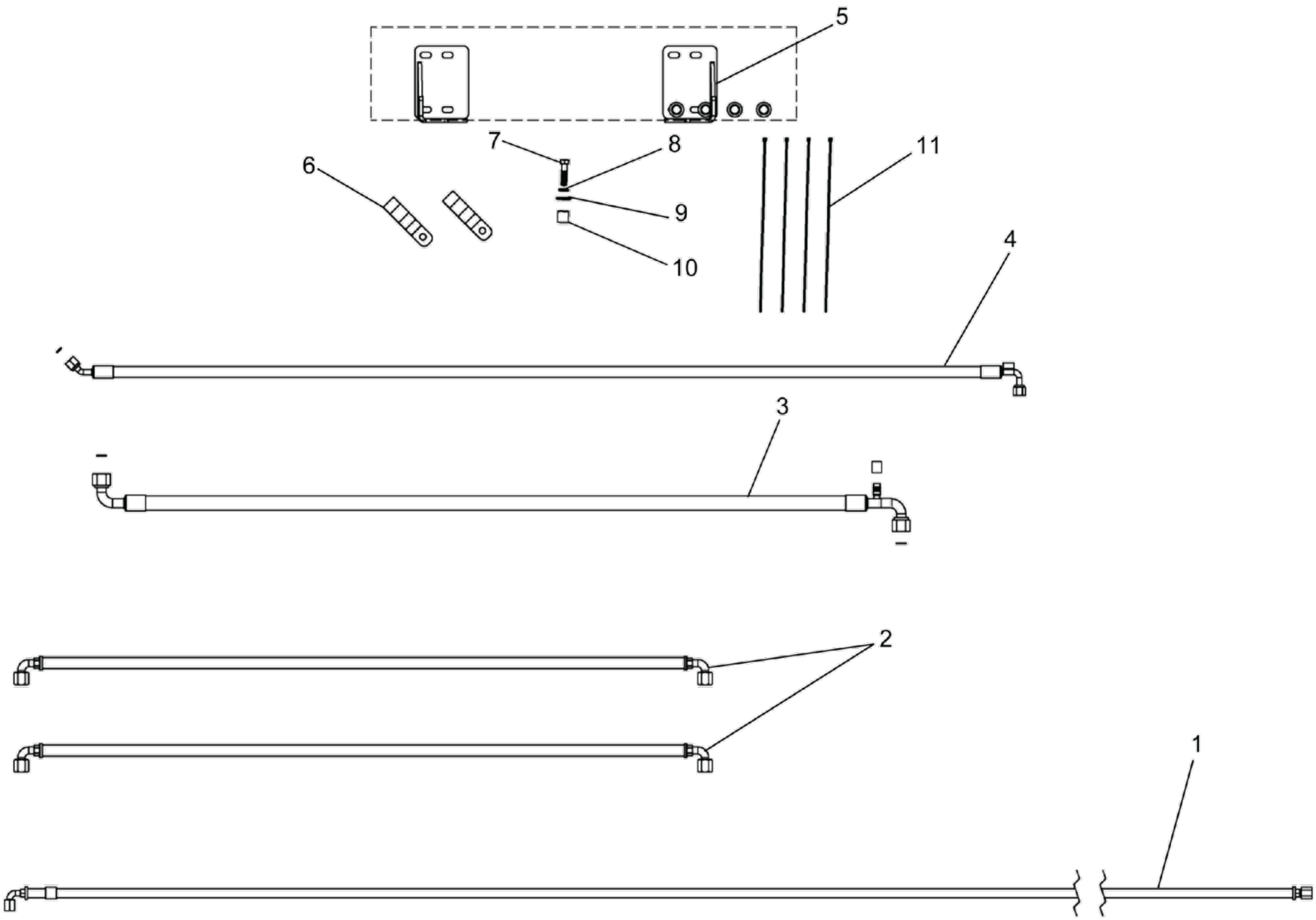

WHEN ORDERING PARTS, SPECIFY MODEL NUMBER, SERIAL NUMBER AND DESCRIPTION OF PARTS REQUIRED

HOSE & DRIVE MOUNTING KIT

ITEM	PART NUMBER	DESCRIPTION	QUANTITY	NOTES
	T133389	**KIT, HOSE & DRIVE MOUNTING**		
1	227564	HOSE ASSEMBLY, -6 HYD CASE DRAIN	1	
2	227565	HOSE ASSEMBLY, HYD -8 HEAT	2	
3	227566	HOSE ASSEMBLY, #10 BLKHD-COMP	1	
4	227567	HOSE ASSEMBLY, #6 RD-BLKHD	1	
5	**221844**	KIT, MD 9037/47/57 MTG	1	SEE PAGE 203
6	221845	CLAMP, DOUBLE HOSE	2	
7	221846	HHCS 3/8 NC X 1 1/2 GR8 ZP	1	
8	223849	WASHER, LOCK 3/8" ID	1	
9	221847	WASHER, FLAT 3/8" / M10 -HARD YZ	1	
10	227568	SPACER, TUBE 3/4" LG BLACK	1	
11	216050	TIE, PLASTIC 15"	4	

WHEN ORDERING PARTS, SPECIFY MODEL NUMBER, SERIAL NUMBER AND DESCRIPTION OF PARTS REQUIRED

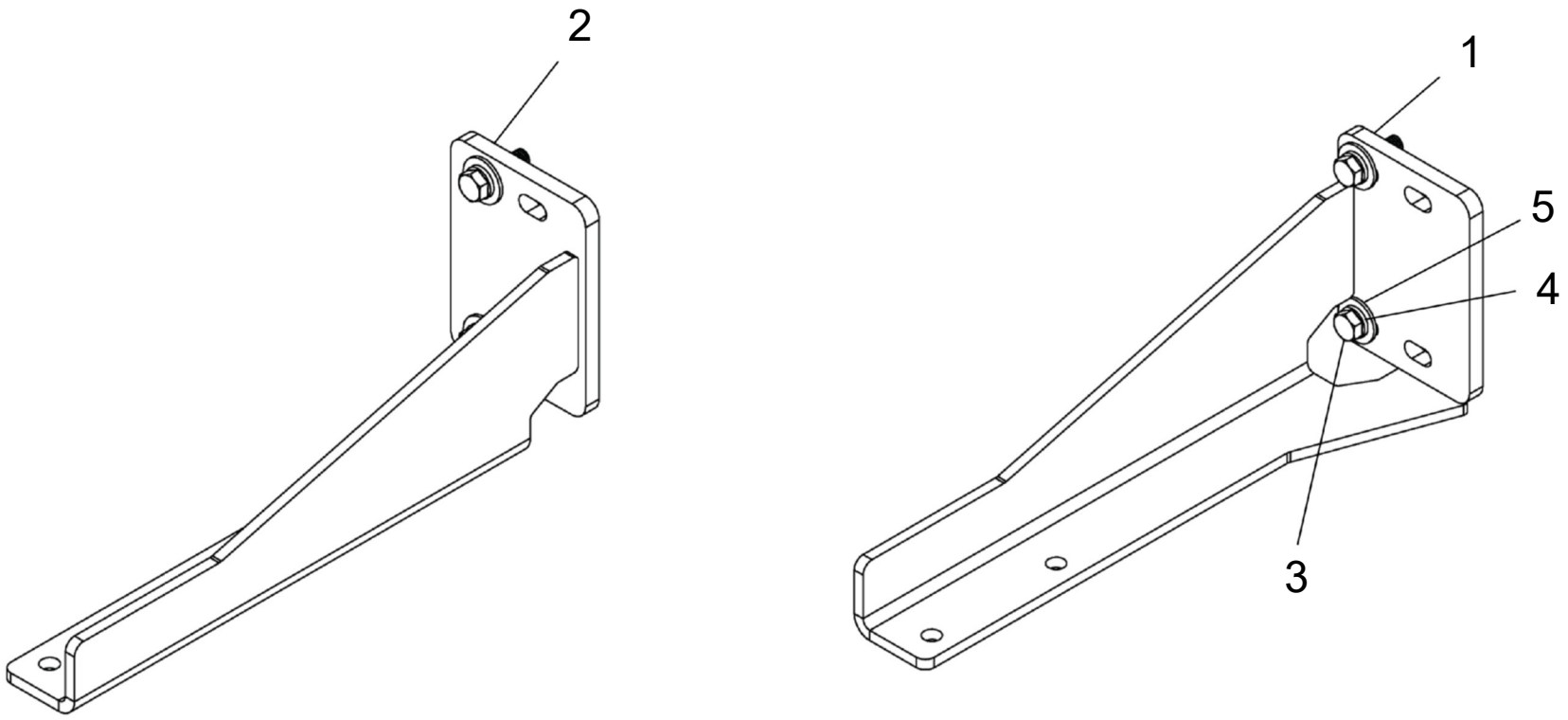

WHEN ORDERING PARTS, SPECIFY MODEL NUMBER, SERIAL NUMBER AND DESCRIPTION OF PARTS REQUIRED

KIT, MD 9037/47/57 MTG

ITEM	PART NUMBER	DESCRIPTION	QUANTITY	NOTES
	221844	**KIT, MD 9037/47/57 MTG**		
1	222341	BRKT, MTG RIGHT	1	
2	222342	BRKT, MTG LEFT	1	
3	221800	HHCS 3/8 NC X 1-1/4 GR8 ZP	4	
4	223849	WASHER, LOCK 3/8" ID	4	
5	221847	WASHER, FLAT 3/8” / M10 -HARD YZ	4	

WHEN ORDERING PARTS, SPECIFY MODEL NUMBER, SERIAL NUMBER AND DESCRIPTION OF PARTS REQUIRED

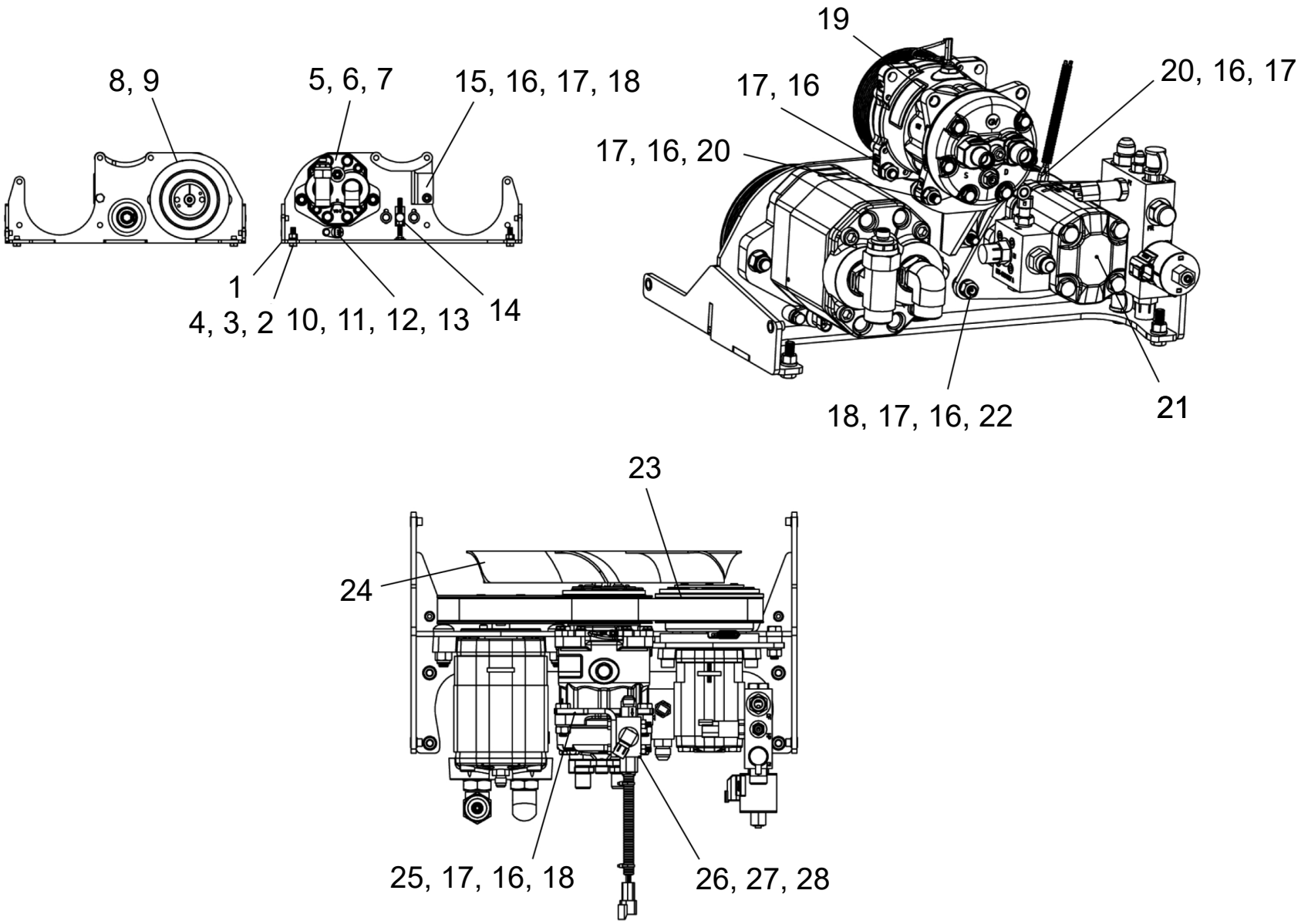

WHEN ORDERING PARTS, SPECIFY MODEL NUMBER, SERIAL NUMBER AND DESCRIPTION OF PARTS REQUIRED

HYDRAULIC DRIVE UNIT

ITEM	PART NUMBER	DESCRIPTION	QUANTITY	NOTES
	T135299	**HYDRAULIC DRIVE UNIT**		
1	221797	BASE, HYD	1	
2	221798	NUT, HEX 3/8-16NC YZ	4	
3	223849	WASHER, LOCK 3/8” ID	4	
4	221800	HHCS 3/8 NC X 1-1/4 GR8 ZP	4	
5	227569	MOTOR ASSEMBLY, 1.59 9067 AOH (ORFS)	1	
6	221809	CARRIAGE BOLT, 1/2 NC X 1.75 ZP	2	
7	221810	NUT HEX 1/2-13 NC NYLOCK ZP GR 8	2	
8	221812	BUSHING, 7/8” ID SPLIT W/ 1/4 KEYWAY, BLK OXD FINISH	1	
9	221813	PULLEY, HYD PV8	1	
10	221815	SENSOR, SPEED	1	
11	221816	HHCS 1/4 NC X 1.5	1	
12	221817	WASHER, LOCK 1/4 YZ	1	
13	227570	SPACER, ALUMINUM .63/.25 X .625	1	
14	**227571**	ASSEMBLY, BELT TENSIONER	1	SEE PAGE 209
15	221818	BRKT, COMP MTG	1	
16	221819	WASHER, LOCK M10 ZP	12	
17	221820	NUT, HEX M10-1.5 YZ	13	
18	219935	HHCS M10-1.5 X 35MM GR 10.9 YZ(16MM-HEAD)	8	
19	227572	COMP, SD7H15 12 N 4 S8 119MM(FLX7)-FLAG TERM.	1	
20	221823	HHCS M10 - 1.5 X 40MM GR10.9 YZ(16MM-HEAD)	2	
21	221822	PUMP/BLOCK ASSEMBLY MD9067 12V	1	
22	221824	SPACER, TUBE .75 X .405 X .321" LG PAINTED	3	
23	221825	BELT, DRIVE PV8 X 45.0	1	
24	227573	FAN MOUNTING GROUP - 9067	1	
25	221829	BKT, OLS	1	
26	221830	ASSEMBLY, OIL LEVEL SENSOR BLOCK	1	
27	221831	HHCS 1/4 - 20 NC X 2 ZP	2	
28	221832	NUT, HEX 1/4-20 NYLOCK	2	

WHEN ORDERING PARTS, SPECIFY MODEL NUMBER, SERIAL NUMBER AND DESCRIPTION OF PARTS REQUIRED

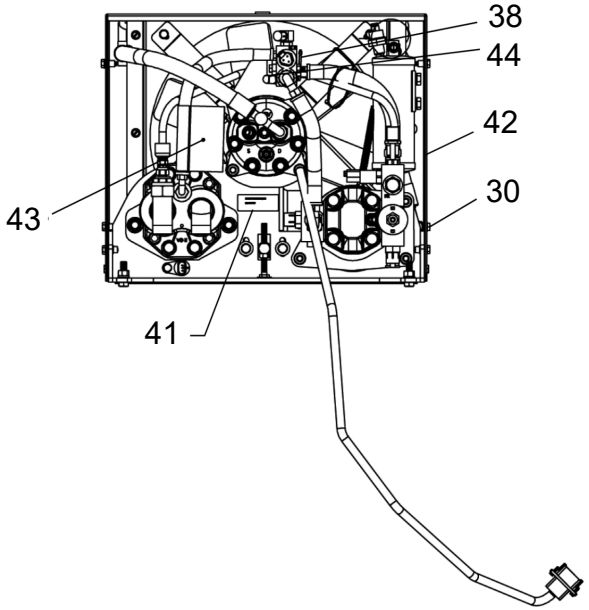

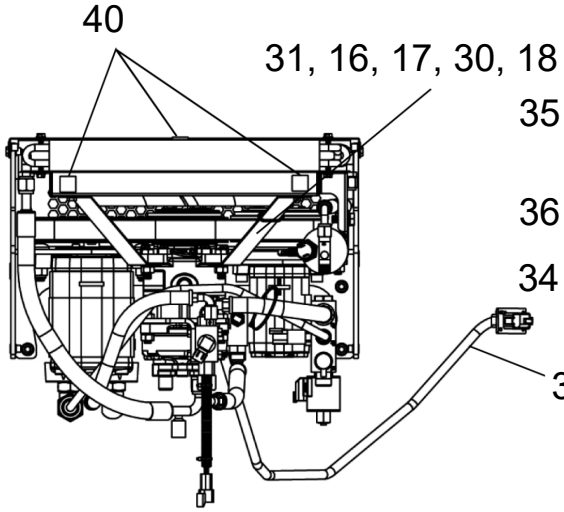

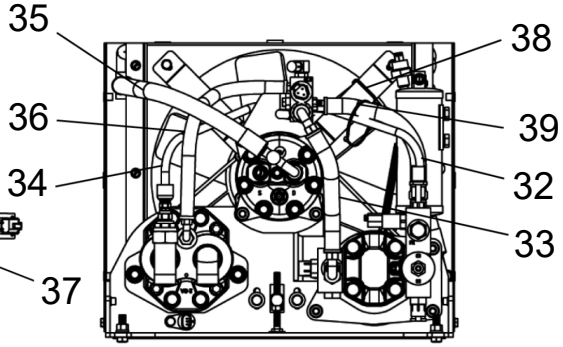

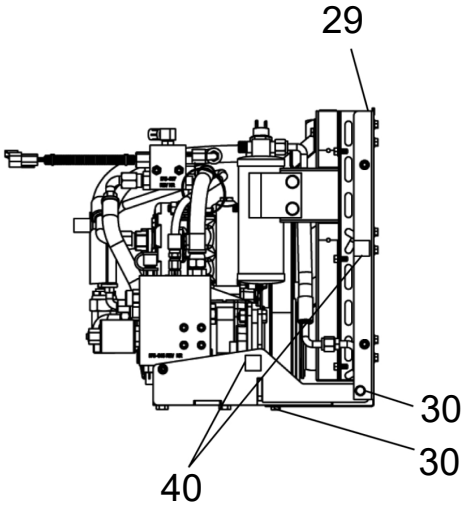

WHEN ORDERING PARTS, SPECIFY MODEL NUMBER, SERIAL NUMBER AND DESCRIPTION OF PARTS REQUIRED

HYDRAULIC DRIVE UNIT

ITEM	PART NUMBER	DESCRIPTION	QUANTITY	NOTES
	T135299	**HYDRAULIC DRIVE UNIT**		
29	221833	COND. ASSEMBLY (9067)	1	
30	221835	HWHCS 1/4-20 X 3/4 (WHIZLK)	12	
31	221834	BRACE	2	
32	221837	HOSE ASSEMBLY, PUSH ON, -8 STR-90	1	
33	221838	HOSE ASSEMBLY, PUSH ON, -8 90-90	1	
34	227574	HOSE ASSEMBLY, HYD 04FFORX-04FJX-25.0" SAE100R2	1	
35	227575	HOSE ASSEMBLY, COMP-CD	1	
36	221839	HOSE ASSEMBLY, PUSH ON, -6 90-90	1	
37	221840	WIRE HARNESS, 9067	1	
38	221874	TIE, PLASTIC 7"	2	
39	216050	TIE, PLASTIC 15"	1	
40	227576	GASKET, .9" SQUARE OR .9" ROUND	7	
41	221841	LABEL, KW SERIAL#	1	
42	221842	COVER,17-9067	1	
43	227577	LABEL, OIL CHARGE WARNING	1	
44	221873	TIE, PLASTIC 4"	1	

WHEN ORDERING PARTS, SPECIFY MODEL NUMBER, SERIAL NUMBER AND DESCRIPTION OF PARTS REQUIRED

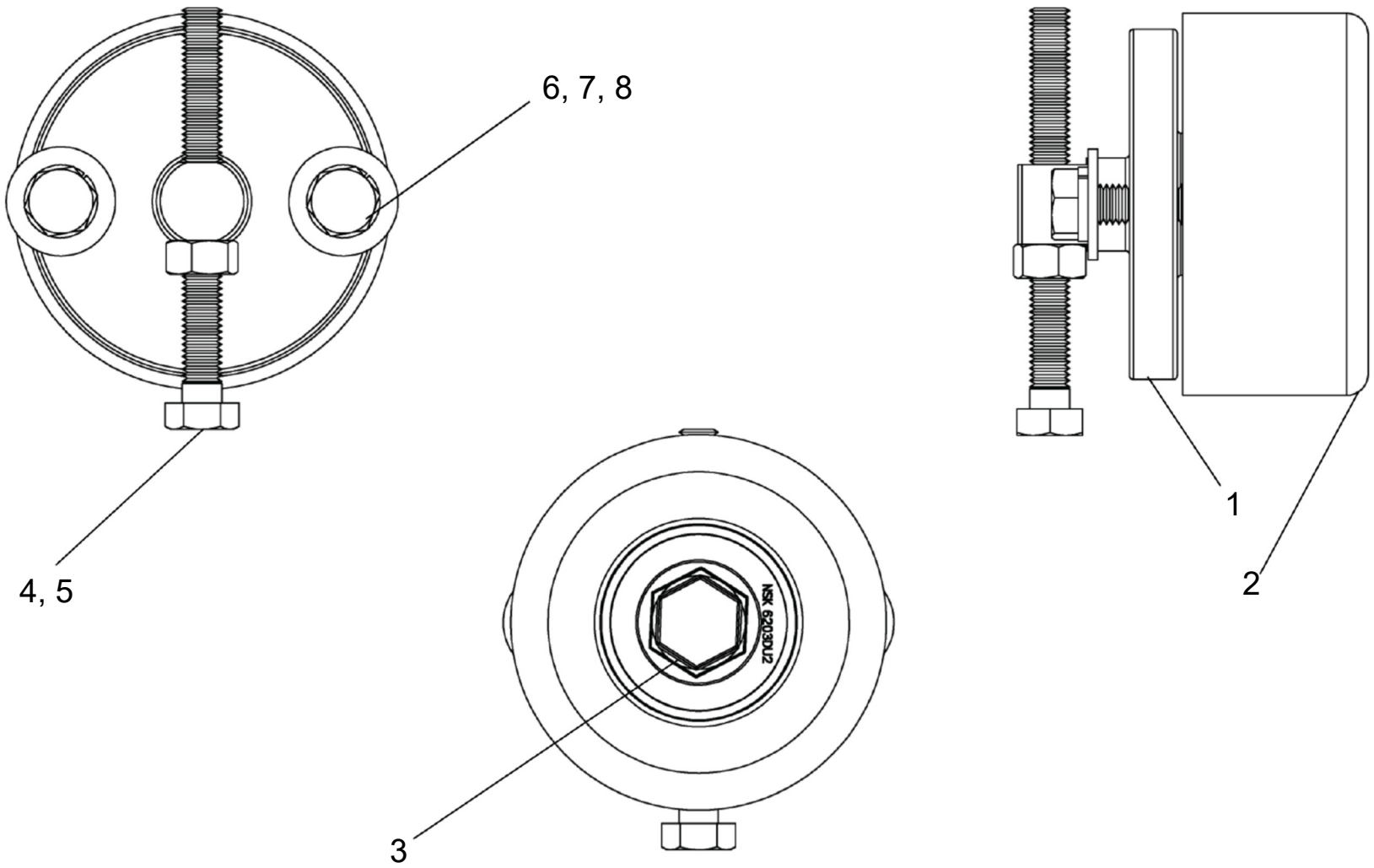

WHEN ORDERING PARTS, SPECIFY MODEL NUMBER, SERIAL NUMBER AND DESCRIPTION OF PARTS REQUIRED

ASSEMBLY, BELT TENSIONER

ITEM	PART NUMBER	DESCRIPTION	QUANTITY	NOTES
	227571	**KIT, MD 9037/47/57 MTG**		
1	221801	TENSIONER, TURNED	1	
2	221806	PULLEY ASSEMBLY, BACKSIDE PV8 X 3.0"	1	
3	221807	SHOULDER BOLT, 7/16-20 X 1 1/2	1	
4	221803*	HHCS M8-1.25 X 80 GR8.8 FULL THREAD ZP	1	
5	221802*	NUT HEX M8 X 1.25 MM	1	
6	221804*	HHCS M8X1.25 X 25 MM	2	
7	221814*	WASHER, LOCK M8 ZP	2	
8	221805*	WASHER, FLAT 5/16" YZ	2	

NOTE: *ITEM NOT SOLD SEPARATELY

WHEN ORDERING PARTS, SPECIFY MODEL NUMBER, SERIAL NUMBER AND DESCRIPTION OF PARTS REQUIRED

CHAPTER NO. 2

50-155 M & 50-155 U LOWER STRUCTURE

PAGE INTENTIONALLY LEFT BLANK

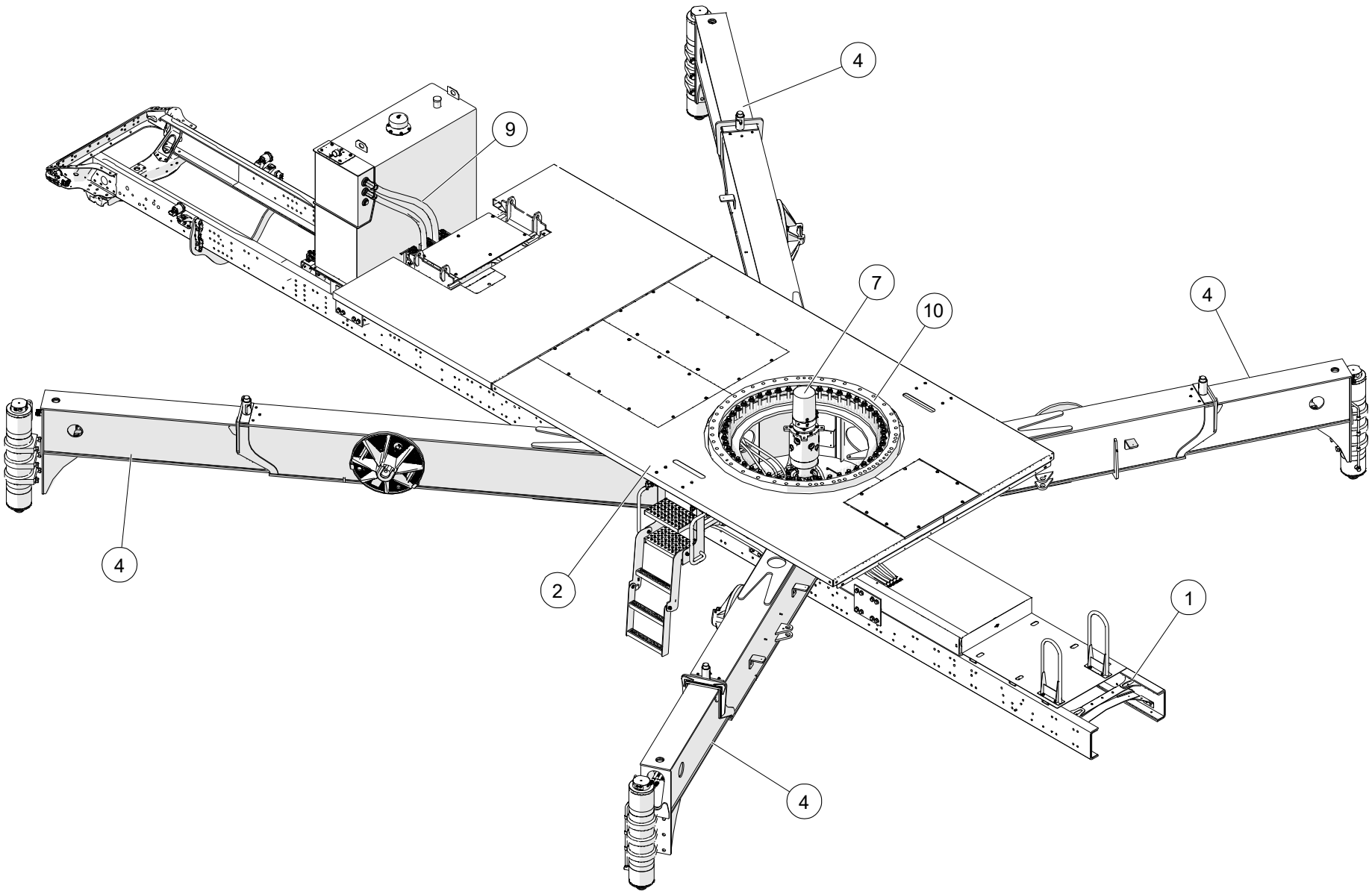

WHEN ORDERING PARTS, SPECIFY MODEL NUMBER, SERIAL NUMBER AND DESCRIPTION OF PARTS REQUIRED

ITEM	PART NUMBER	DESCRIPTION	QUANTITY	NOTES
	50-155 M & 50-155 U -LWR-STR	**50-155 M & 50-155 U LOWER STRUCTURE**		
1	**1033508**	CENTER STRUCTURE INSTALLATION	1	SEE PAGE 215
2	**1034859**	DECK INSTALLATION	1	SEE PAGE 217
3*	**1008827**	XO FENDER OPTIONS	1	SEE PAGE 229
4	**1032975**	OUTRIGGER INSTALLATION	4	SEE PAGE 237
5*	**T122108**	REAR BUMPER ASSEMBLY	1	SEE PAGE 247
6	**1027167**	LOWER ELECTRICAL ASSEMBLY	1	SEE PAGE 249
7	**1034605**	LOWER HYDRAULICS	1	SEE PAGE 251
8*	**1035206****	50-155 M & 50-155 U PUMP/PTO OPTIONS	1	SEE PAGE 279
9	**1035218****	50-155 M & 50-155 U XO HOSE OPTIONS	1	SEE PAGE 289
10	**T124827**	SWING BEARING INSTALLATION	1	SEE PAGE 299

NOTE: *NOT SHOWN IN THE ILLUSTRATION
**NOT SERVICEABLE AT THIS LEVEL

WHEN ORDERING PARTS, SPECIFY MODEL NUMBER, SERIAL NUMBER AND DESCRIPTION OF PARTS REQUIRED

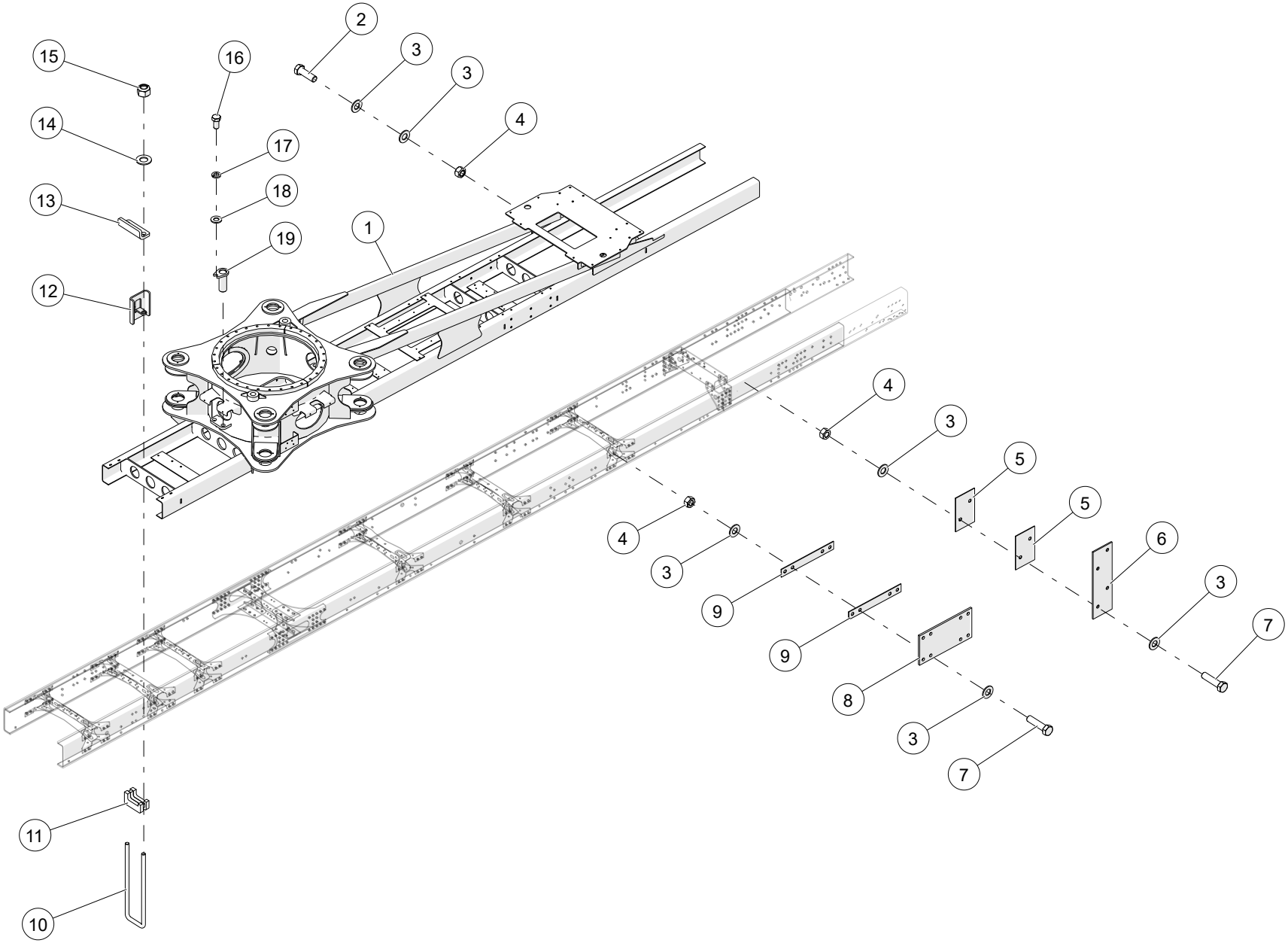

WHEN ORDERING PARTS, SPECIFY MODEL NUMBER, SERIAL NUMBER AND DESCRIPTION OF PARTS REQUIRED

CENTER STRUCTURE INSTALLATION

ITEM	PART NUMBER	DESCRIPTION	QUANTITY	NOTES
	1033508	**CENTER STRUCTURE INSTALLATION**		
1	1033509	CENTER STRUCTURE WELDMENT	1	
2	HHCS-C625B008M0	HEX HEAD CAP SCREW, 5/8-11 X 2 LEN, GR8, MA	28	
3	WSH2-X6250008Z0	SAE WASHER, 5/8, GR8, ZN	112	
4	NTP-625C000-25	NUT, HEX TPLCK 0.625-11,ST SQC G5	56	
5	1040343	SHIM, FRONT SHEAR PLATE	4	
6	1038827	PLATE, SHEAR FRAME BRACKET	2	
7	HHCS-C625B508M0	HEX HEAD CAP SCREW, 5/8-11 X 2 1/2 LEN, GR8,MA	28	
8	T117395	PLATE, SHEAR	6	
9	1040342	SHIM, SHEAR PLATE	12	
10	220-99066	U-BOLT	4	
11	T113753	SADDLE ASSY - U BOLT	4	
12	T158972	FRAME REINFORCEMENT	4	
13	T133066	PLATE, CLAMP	4	
14	WSH1-XA000008Z0	WASHER, 1, GR8, ZN	8	
15	NUT3-CA000008M0	NYLON LOCK NUT, 1-8, GR8, MA	8	
16	HHCS-C500A005Z0	HEX HEAD CAP SCREW, 1/2-13 X 1 LEN, GR5, ZN	4	
17	WSH4-X5000008Z0	SPIRAL LOCK WASHER, 1/2, GR8, ZN	4	
18	WSH2-X5000008Z0	SAE WASHER, 1/2, GR8, ZN	4	
19	710F0412	PIN ASS'Y, STEER CYL	4	

WHEN ORDERING PARTS, SPECIFY MODEL NUMBER, SERIAL NUMBER AND DESCRIPTION OF PARTS REQUIRED

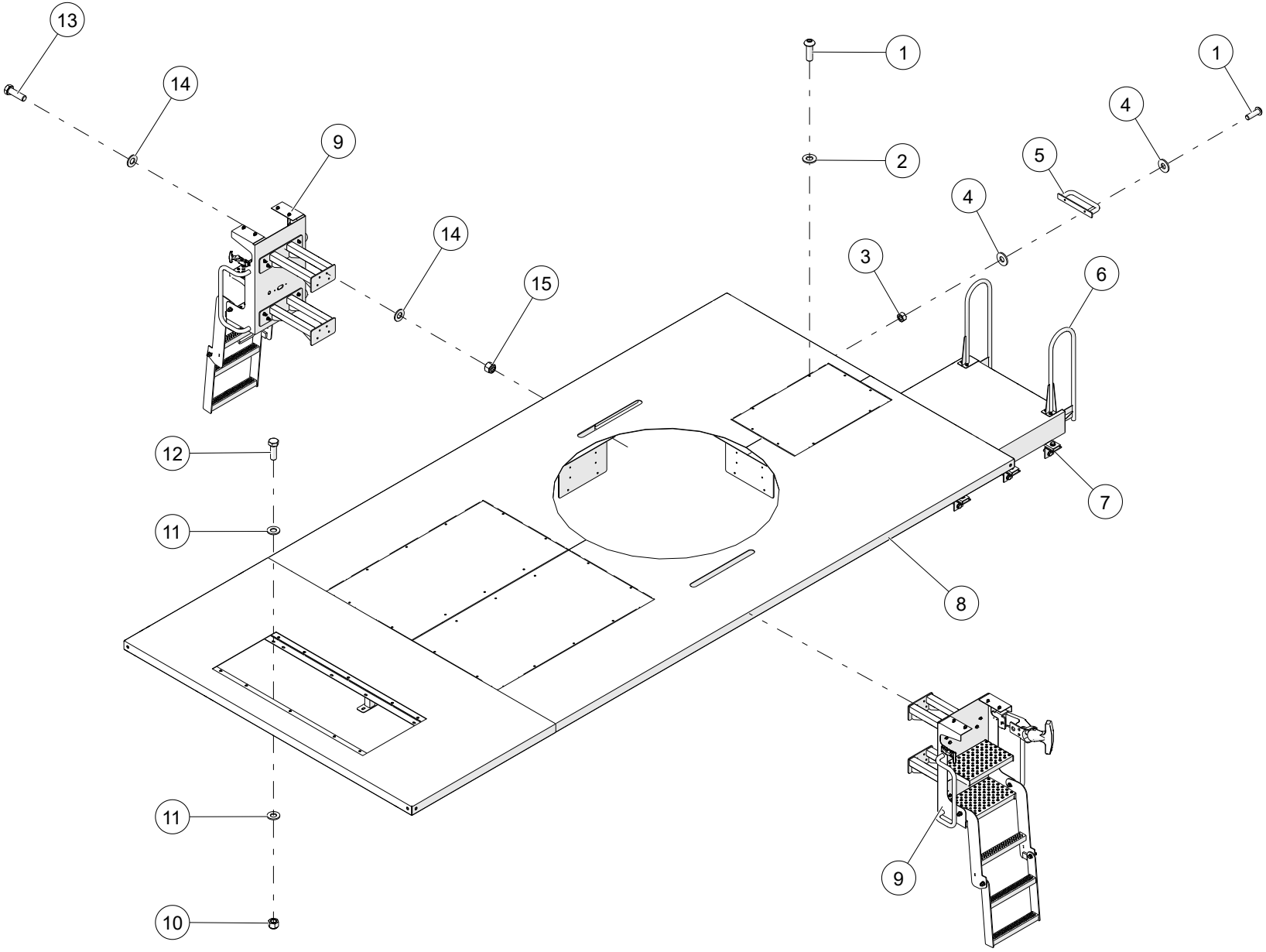

WHEN ORDERING PARTS, SPECIFY MODEL NUMBER, SERIAL NUMBER AND DESCRIPTION OF PARTS REQUIRED

DECK INSTALLATION

ITEM	PART NUMBER	DESCRIPTION	QUANTITY	NOTES
	1034859	**DECK INSTALLATION**		
1	SH03-C313A00BB0	SHCS BUTTON HEAD, 5/16-18 X 1 LEN, BO	32	
2	WSH2-X3130008Z0	SAE WASHER, 5/16, GR8, ZN	28	
3	NUT1-C3130005Z0	HEX NUT, 5/16-18, GR5, ZN	4	
4	WSH3-X3130008Z0	FENDER WASHER, 5/16, GR8, ZN	8	
5	1041468	HANDLE WELDMENT	2	
6	**1041369**	PLATFORM INSTALLATION	1	SEE PAGE 219
7	**T113262**	MOUNTING KIT, DECK	1	SEE PAGE 223
8	**1034860**	DECK KIT	1	SEE PAGE 225
9	**1035135**	LADDER ASSEMBLY	2	SEE PAGE 227
10	NUT3-C5000008Z0	NYLON LOCK NUT, 1/2-13, GR8, ZN	48	
11	WSH2-X5000008Z0	SAE WASHER, 1/2, GR8, ZN	96	
12	HHCS-C500A508Z0	HEX HEAD CAP SCREW, 1/2-13 X 1 1/2 LEN, GR8, ZN	20	
13	HHCS-C375A258Z0	HEX HEAD CAP SCREW, 3/8-16 X 1 1/4 LEN, GR8, ZN	24	
14	WSH2-X3750008Z0	SAE WASHER, 3/8, GR8, ZN	48	
15	NUT3-C3750008Z0	NYLON LOCK NUT, 3/8-16, GR8, ZN	24	

WHEN ORDERING PARTS, SPECIFY MODEL NUMBER, SERIAL NUMBER AND DESCRIPTION OF PARTS REQUIRED

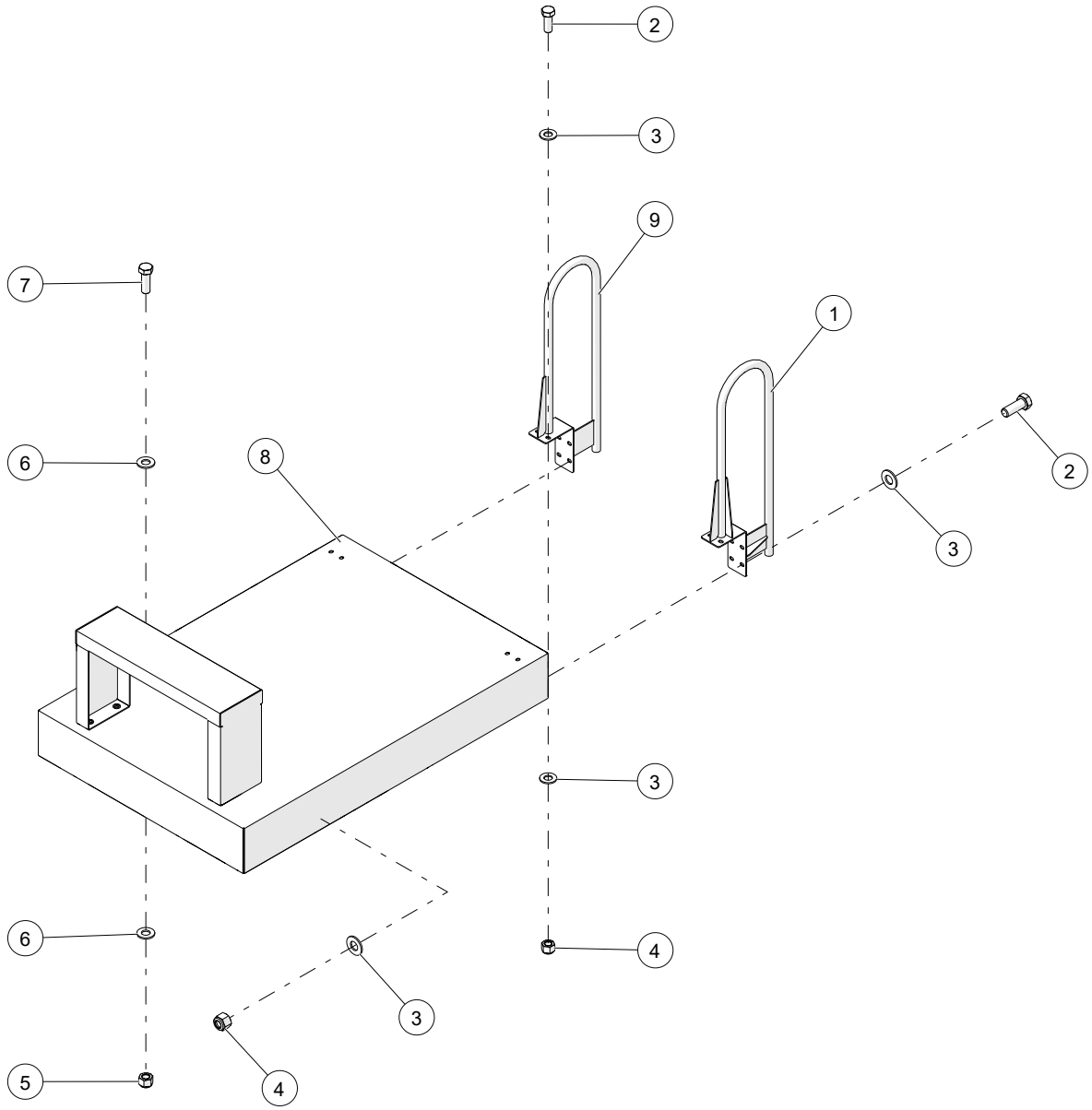

WHEN ORDERING PARTS, SPECIFY MODEL NUMBER, SERIAL NUMBER AND DESCRIPTION OF PARTS REQUIRED

ITEM	PART NUMBER	DESCRIPTION	QUANTITY	NOTES
	1041369	**PLATFORM INSTALLATION**		
1	T123669	HANDRAIL ASSEMBLY, REAR LH	1	
2	HHCS-C375A005Z0	HEX HEAD CAP SCREW, 3/8-16 X 1 LEN, GR5, ZN	12	
3	WSH1-X3750008Z0	WASHER, 3/8, GR8, ZN	24	
4	NUT3-C3750005Z0	NYLON LOCK NUT, 3/8-16, GR5, ZN	12	
5	NUT3-C5000005Z0	NYLON LOCK NUT, 1/2-13, GR5, ZN	6	
6	WSH1-X5000008Z0	WASHER, 1/2, GR8, ZN	12	
7	HHCS-C500A505Z0	HEX HEAD CAP SCREW, 1/2-13 X 1 1/2 LEN, GR5, ZN	6	
8	**1041374**	PLATFORM ASSEMBLY	1	SEE PAGE 221
9	T123671	HANDRAIL ASSEMBLY, REAR RH	1	

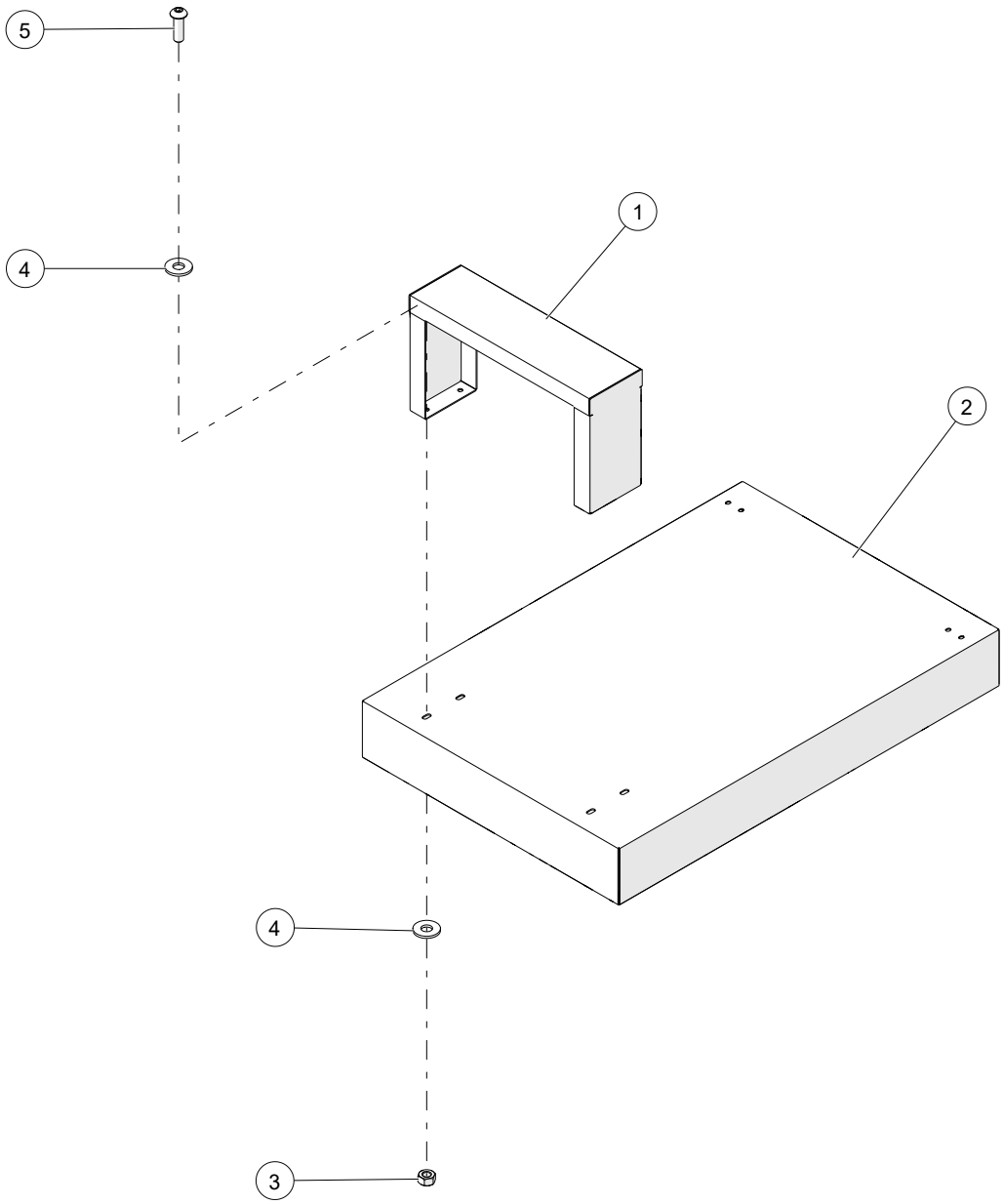

WHEN ORDERING PARTS, SPECIFY MODEL NUMBER, SERIAL NUMBER AND DESCRIPTION OF PARTS REQUIRED

PLATFORM ASSEMBLY

ITEM	PART NUMBER	DESCRIPTION	QUANTITY	NOTES
	1041374	**PLATFORM ASSEMBLY**		
1	1041542	LADDER, WELDMENT	1	
2	1041368	PLATFORM, LOWER REAR	1	
3	NUT1-C3130005Z0	HEX NUT, 5/16-18, GR5, ZN	4	
4	WSH3-X3130008Z0	FENDER WASHER, 5/16, GR8, ZN	8	
5	SH03-C313A00BB0	SHCS BUTTON HEAD, 5/16-18 X 1 LEN, BO	4	

WHEN ORDERING PARTS, SPECIFY MODEL NUMBER, SERIAL NUMBER AND DESCRIPTION OF PARTS REQUIRED

MOUNTING KIT, DECK

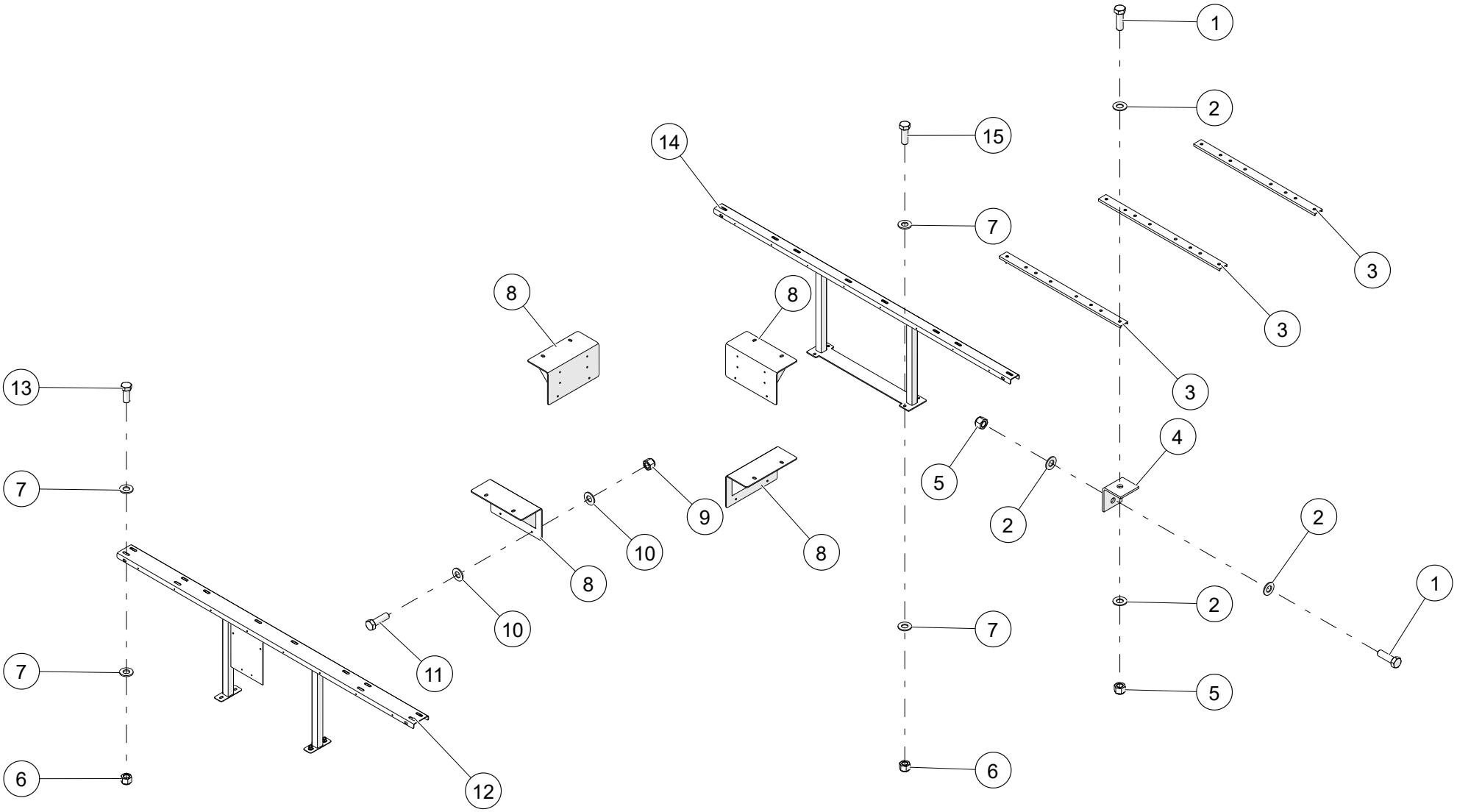

WHEN ORDERING PARTS, SPECIFY MODEL NUMBER, SERIAL NUMBER AND DESCRIPTION OF PARTS REQUIRED

MOUNTING KIT, DECK

ITEM	PART NUMBER	DESCRIPTION	QUANTITY	NOTES
	T113262	**MOUNTING KIT, DECK**		
1	HHCS-C625B008M0	HEX HEAD CAP SCREW, 5/8-11 X 2 LEN, GR8, MA	12	
2	WSH2-X6250008Z0	SAE WASHER, 5/8, GR8, ZN	48	
3	T118692	CHANNEL, 2.50 X 40.0 X 2.27	3	
4	T118712	BRACKET, CHANNEL MOUNT	6	
5	NUT3-C6250008Z0	NYLON LOCK NUT, 5/8-11, GR8, MA	6	
6	NUT3-C5000008Z0	NYLON LOCK NUT, 1/2-13, GR8, ZN	48	
7	WSH2-X5000008Z0	SAE WASHER, 1/2, GR8, ZN	96	
8	T113168	BRACKET ASSY, MOUNT	4	
9	NUT3-C3750008Z0	NYLON LOCK NUT, 3/8-16, GR8, ZN	24	
10	WSH2-X3750008Z0	SAE WASHER, 3/8, GR8, ZN	48	
11	HHCS-C375A258Z0	HEX HEAD CAP SCREW, 3/8-16 X 1 1/4 LEN, GR8, ZN	24	
12	T113157	MOUNT ASSY, DECK	1	
13	HHCS-C500A258Z0	HEX HEAD CAP SCREW, 1/2-13 X 1 1/4 LEN, GR8, ZN	28	
14	T113161	MOUNT ASSY, REAR	1	
15	HHCS-C500A508Z0	HEX HEAD CAP SCREW, 1/2-13 X 1 1/2 LEN, GR8, ZN	1	

WHEN ORDERING PARTS, SPECIFY MODEL NUMBER, SERIAL NUMBER AND DESCRIPTION OF PARTS REQUIRED

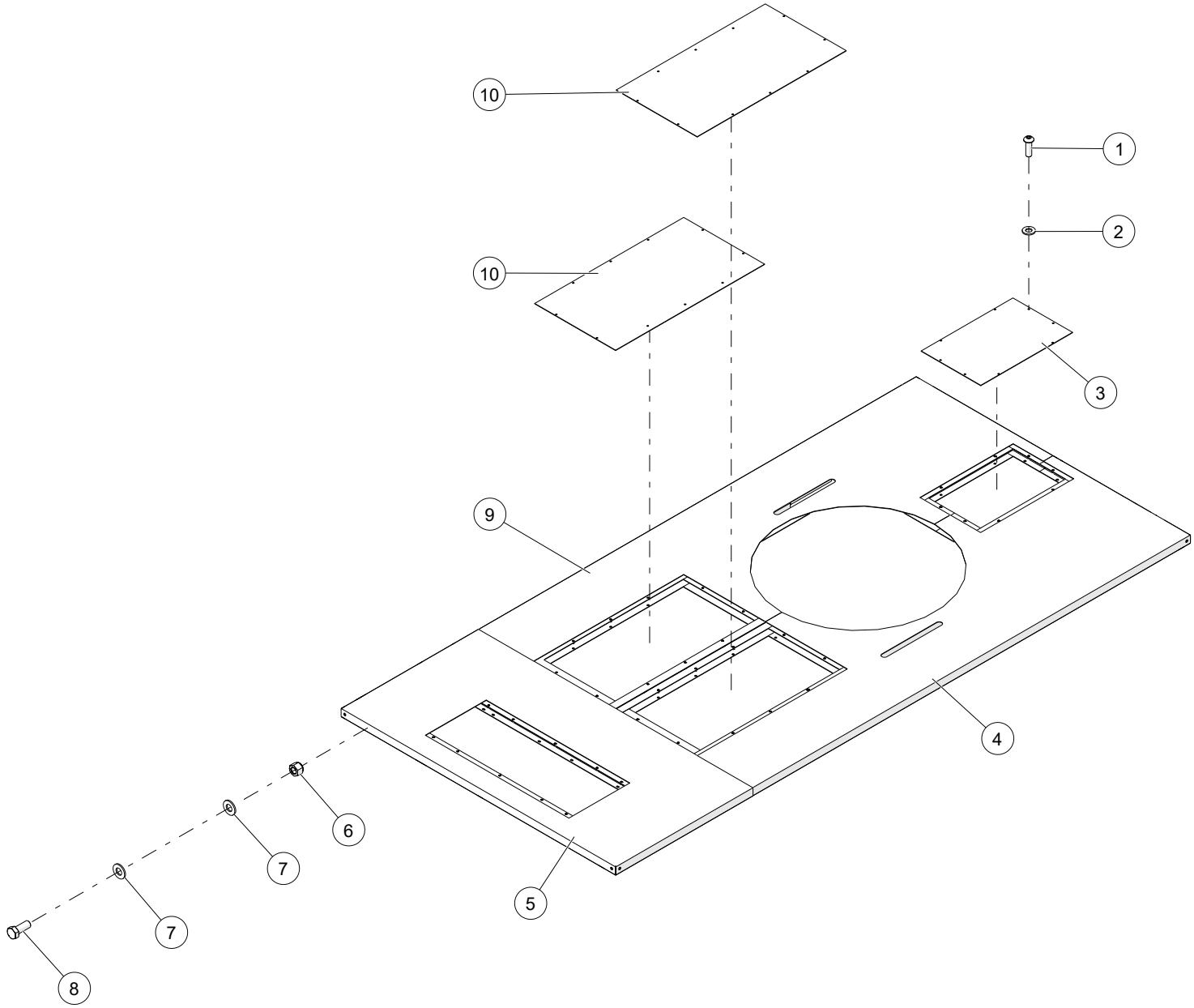

WHEN ORDERING PARTS, SPECIFY MODEL NUMBER, SERIAL NUMBER AND DESCRIPTION OF PARTS REQUIRED

DECK KIT

ITEM	PART NUMBER	DESCRIPTION	QUANTITY	NOTES
	1034860	**DECK KIT**		
1	SH03-C313A00BB0	SHCS BUTTON HEAD, 5/16-18 X 1 LEN, BO	32	
2	WSH2-X3130008Z0	SAE WASHER, 5/16, GR8, ZN	28	
3	T132210	PLATE - COVER ASSY	1	
4	1041543	PANEL ASSY, LH	1	
5	1034890	PANEL ASSY, FRONT	1	
6	NUT3-C5000008Z0	NYLON LOCK NUT, 1/2-13, GR8, ZN	48	
7	WSH2-X5000008Z0	SAE WASHER, 1/2, GR8, ZN	96	
8	HHCS-C500A258Z0	HEX HEAD CAP SCREW, 1/2-13 X 1 1/4 LEN, GR8, ZN	28	
9	1041554	PANEL ASSY, RH	1	
10	T138884	PLATE - COVER ASSY	2	

WHEN ORDERING PARTS, SPECIFY MODEL NUMBER, SERIAL NUMBER AND DESCRIPTION OF PARTS REQUIRED

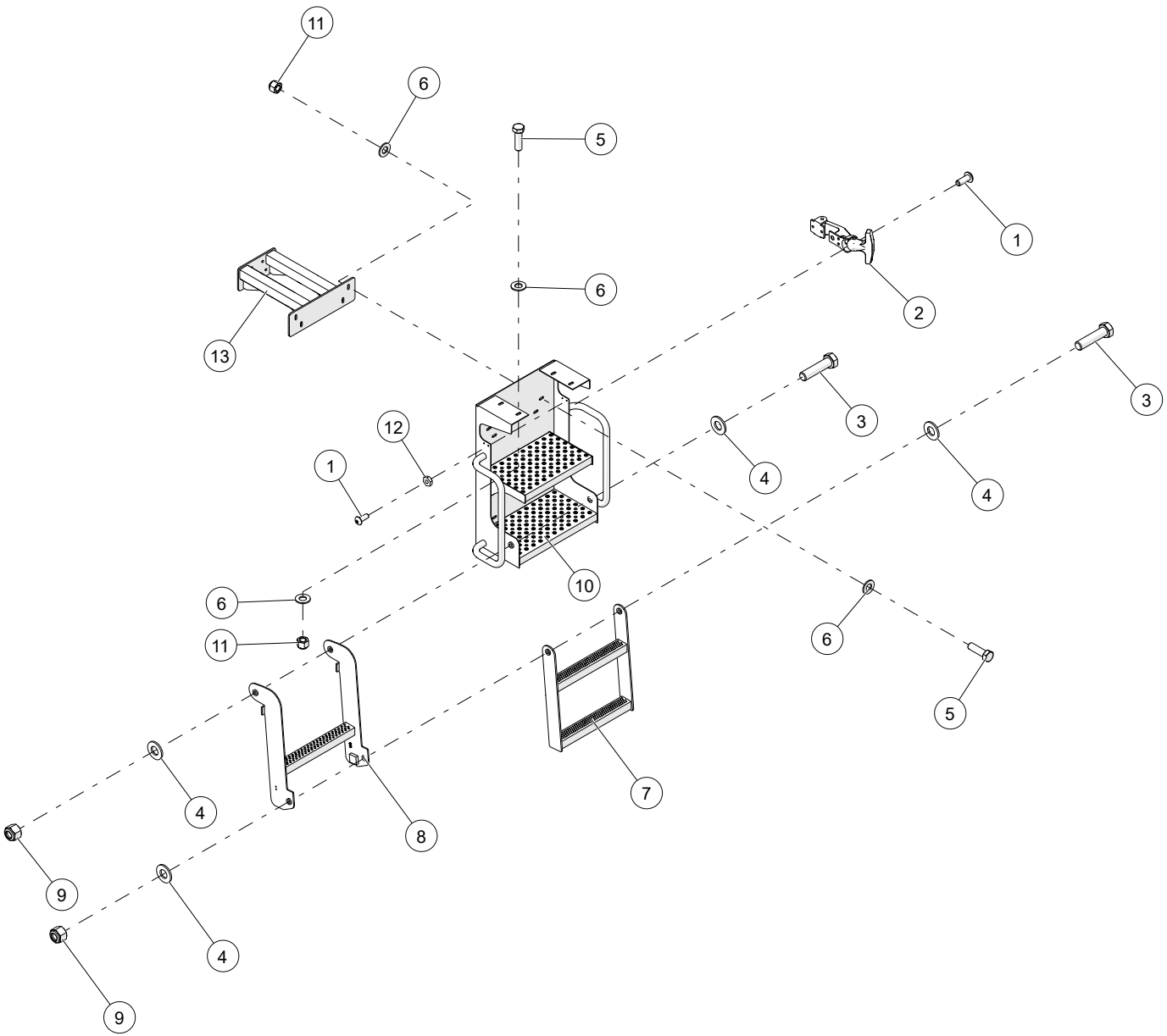

WHEN ORDERING PARTS, SPECIFY MODEL NUMBER, SERIAL NUMBER AND DESCRIPTION OF PARTS REQUIRED

LADDER ASSEMBLY

ITEM	PART NUMBER	DESCRIPTION	QUANTITY	NOTES
	1035135	**LADDER ASSEMBLY**		
1	SH03-C190500BB0	SHCS BUTTON HEAD, 10-24 X 1/2 LEN, BO	8	
2	T117679	LATCH	2	
3	HHCS-C500B008Z0	HEX HEAD CAP SCREW, 1/2-13 X 2 LEN, GR8, ZN	4	
4	WSH1-X5000008Z0	WASHER, 1/2, GR8, ZN	8	
5	HHCS-C375A255Z1	HEX HEAD CAP SCREW, 3/8-16 X 1 1/4 LEN, GR5, ZN, FULL THREAD	12	
6	WSH1-X3750008Z0	WASHER, 3/8, GR8, ZN	24	
7	T135120	LOWER STEP ASSY, LADDER	1	
8	T134365	LOWER LADDER ASSEMBLY	1	
9	NUT3-C5000008Z0	NYLON LOCK NUT, 1/2-13, GR8, ZN	4	
10	1033330	UPPER LADDER ASSEMBLY	1	
11	NUT3-C3750005Z0	NYLON LOCK NUT, 3/8-16, GR5, ZN	12	
12	N23-190C000-20	NUT, HEX, MACH 10-24, ST SQC	8	
13	T117380	LADDER SUPPORT, UPPER	2	

WHEN ORDERING PARTS, SPECIFY MODEL NUMBER, SERIAL NUMBER AND DESCRIPTION OF PARTS REQUIRED

NON - ILLUSTRATED PAGE

XO FENDER OPTIONS

ITEM	PART NUMBER	DESCRIPTION	QUANTITY	NOTES
	1008827	**XO FENDER OPTIONS**		
1	**T150137**	FENDERS 55 INCH AXLE CTR	1	SEE PAGE 231
2	**T150138**	FENDERS 60 INCH AXLE CTR	1	SEE PAGE 233
3	**T150139**	FENDERS 55 INCH AXLE CTR W/PUSHER	1	SEE PAGE 235

WHEN ORDERING PARTS, SPECIFY MODEL NUMBER, SERIAL NUMBER AND DESCRIPTION OF PARTS REQUIRED

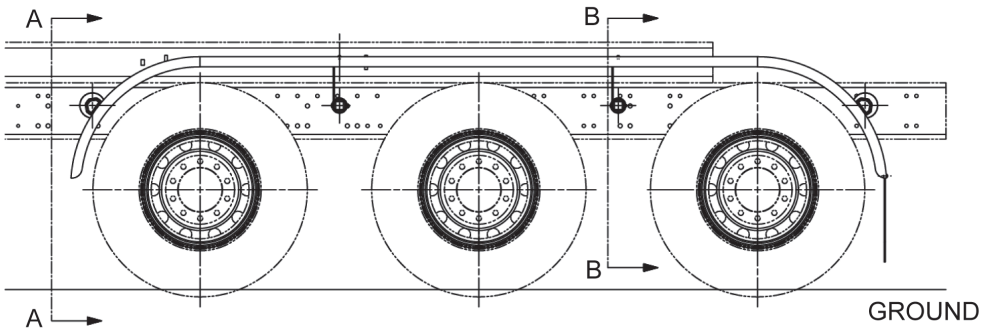

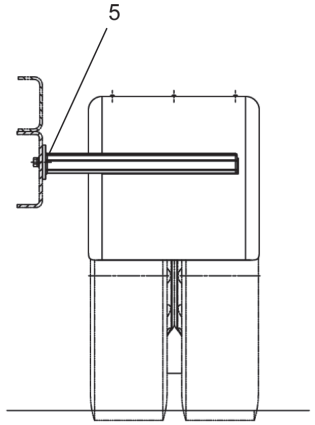

SECTION A-A

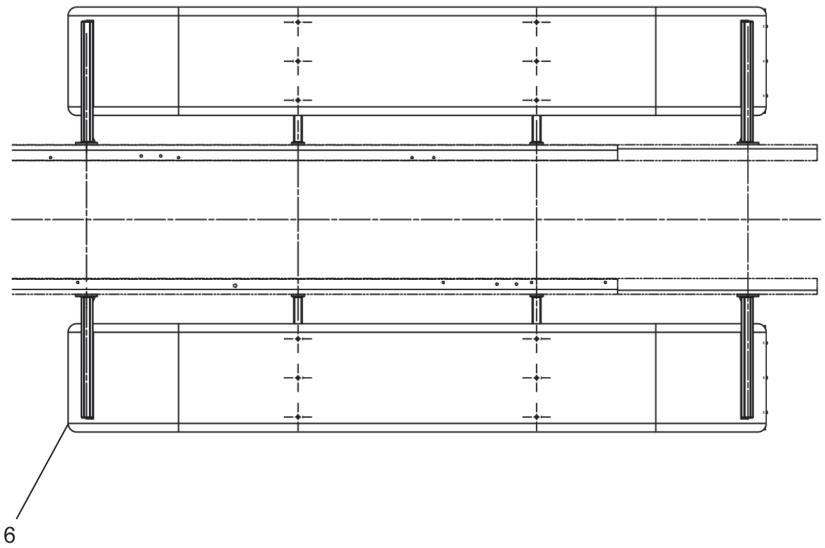

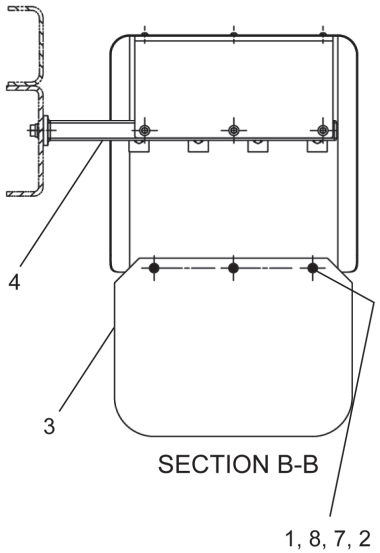

SECTION B-B

WHEN ORDERING PARTS, SPECIFY MODEL NUMBER, SERIAL NUMBER AND DESCRIPTION OF PARTS REQUIRED

FENDERS 55 INCH AXLE CTR

ITEM	PART NUMBER	DESCRIPTION	QUANTITY	NOTES
	T150137	**FENDERS 55 INCH AXLE CTR**		
1	NFH-312C000-25	NUT, HEX, FLANGE 0.312-18,ST Z G5	6	
2	S18-312CA00-E8	SCR, BHSHCS 0.312-18X1.00,SS18-8	6	
3	T123944	MUD FLAP, 18 X 24	2	
4	T137953	UNDER MOUNTING BRACKET	4	
5	T137954	OUTER MOUNTING BRACKET ASSEMBLY	4	
6	T137955	FENDER, 110" TRIDEM	2	
7	WAH-31NX000-Y2	WSR, FL HRD A-NRW 0.3125, ST YZ	6	
8	WMD-80MX000-E8	WSR, FNDR M8, SS 18-8	6	

WHEN ORDERING PARTS, SPECIFY MODEL NUMBER, SERIAL NUMBER AND DESCRIPTION OF PARTS REQUIRED

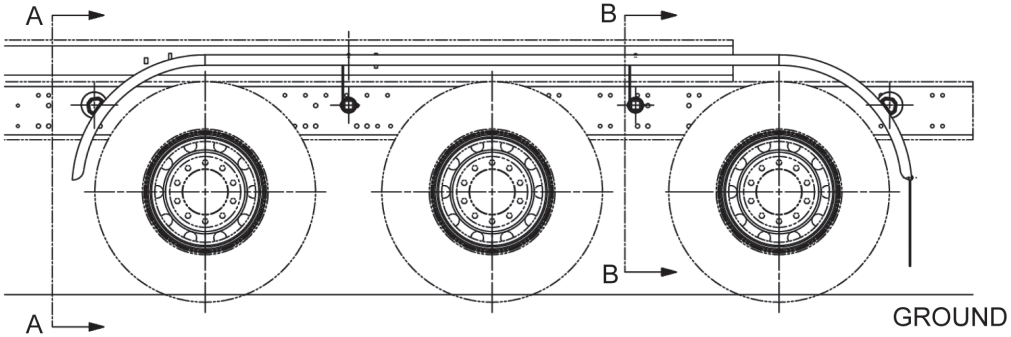

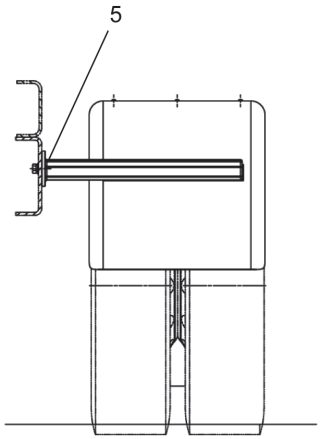

SECTION A-A

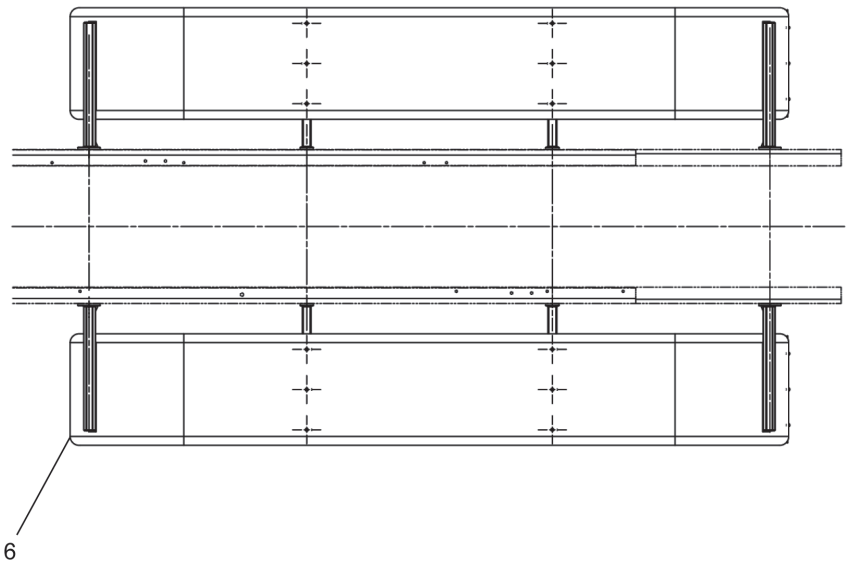

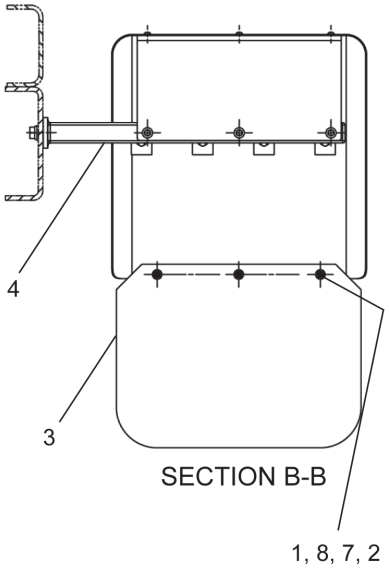

SECTION B-B

WHEN ORDERING PARTS, SPECIFY MODEL NUMBER, SERIAL NUMBER AND DESCRIPTION OF PARTS REQUIRED

FENDERS 60 INCH AXLE CTR

ITEM	PART NUMBER	DESCRIPTION	QUANTITY	NOTES
	T150138	**FENDERS 60 INCH AXLE CTR**		
1	NFH-312C000-25	NUT, HEX, FLANGE 0.312-18,ST Z G5	6	
2	S18-312CA00-E8	SCR, BHSHCS 0.312-18X1.00,SS18-8	6	
3	T123944	MUD FLAP, 18 X 24	2	
4	T137953	UNDER MOUNTING BRACKET	4	
5	T137954	OUTER MOUNTING BRACKET ASSEMBLY	4	
6	T144680	FENDER, 120" TRIDEM	2	
7	WAH-31NX000-Y2	WSR, FL HRD A-NRW 0.3125, ST YZ	6	
8	WMD-80MX000-E8	WSR, FNDR M8, SS 18-8	6	

WHEN ORDERING PARTS, SPECIFY MODEL NUMBER, SERIAL NUMBER AND DESCRIPTION OF PARTS REQUIRED

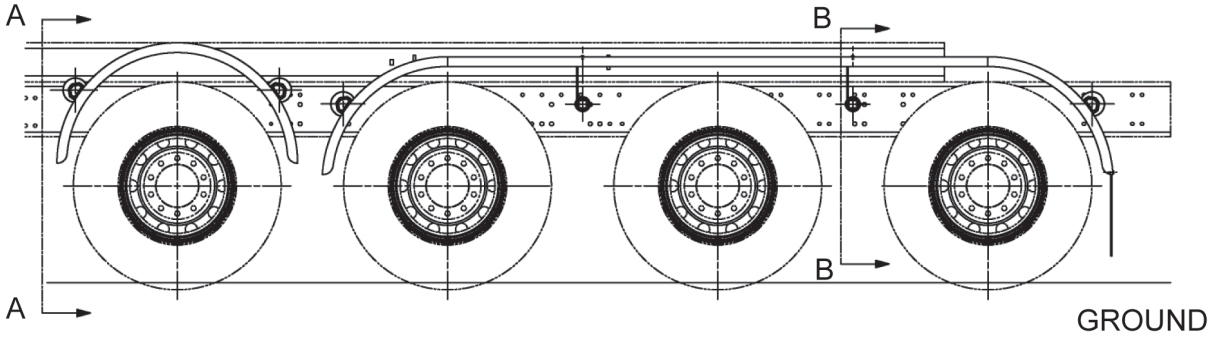

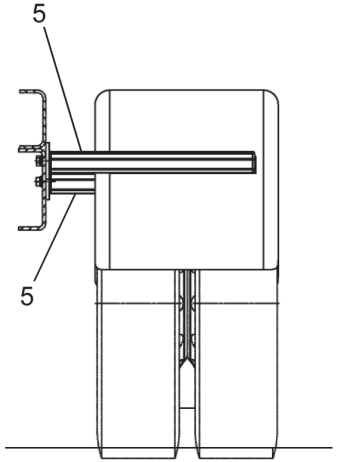

SECTION A-A

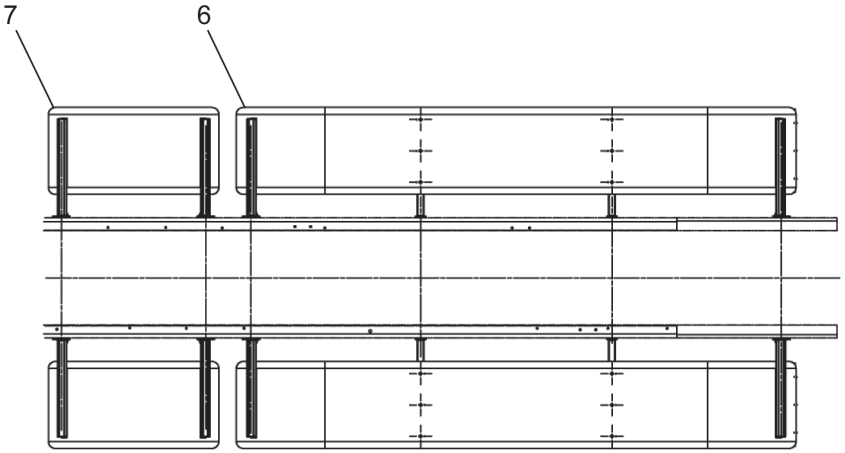

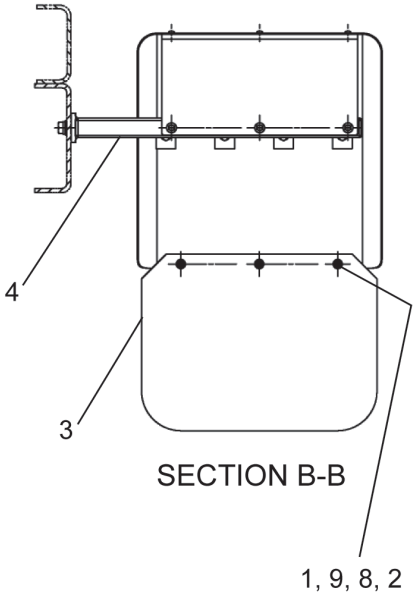

SECTION B-B

WHEN ORDERING PARTS, SPECIFY MODEL NUMBER, SERIAL NUMBER AND DESCRIPTION OF PARTS REQUIRED

FENDERS 55 INCH AXLE CTR W/PUSHER

ITEM	PART NUMBER	DESCRIPTION	QUANTITY	NOTES
	T150139	**FENDERS 55 INCH AXLE CTR W/PUSHER**		
1	NFH-312C000-25	NUT, HEX, FLANGE 0.312-18,ST Z G5	6	
2	S18-312CA00-E8	SCR, BHSHCS 0.312-18X1.00,SS18-8	6	
3	T123944	MUD FLAP, 18 X 24	2	
4	T137953	UNDER MOUNTING BRACKET	4	
5	T137954	OUTER MOUNTING BRACKET ASSEMBLY	8	
6	T137955	FENDER, 110" TRIDEM	2	
7	T145180	FENDER, SINGLE AXLE	2	
8	WAH-31NX000-Y2	WSR, FL HRD A-NRW 0.3125, ST YZ	6	
9	WMD-80MX000-E8	WSR, FNDR M8, SS 18-8	6	

WHEN ORDERING PARTS, SPECIFY MODEL NUMBER, SERIAL NUMBER AND DESCRIPTION OF PARTS REQUIRED

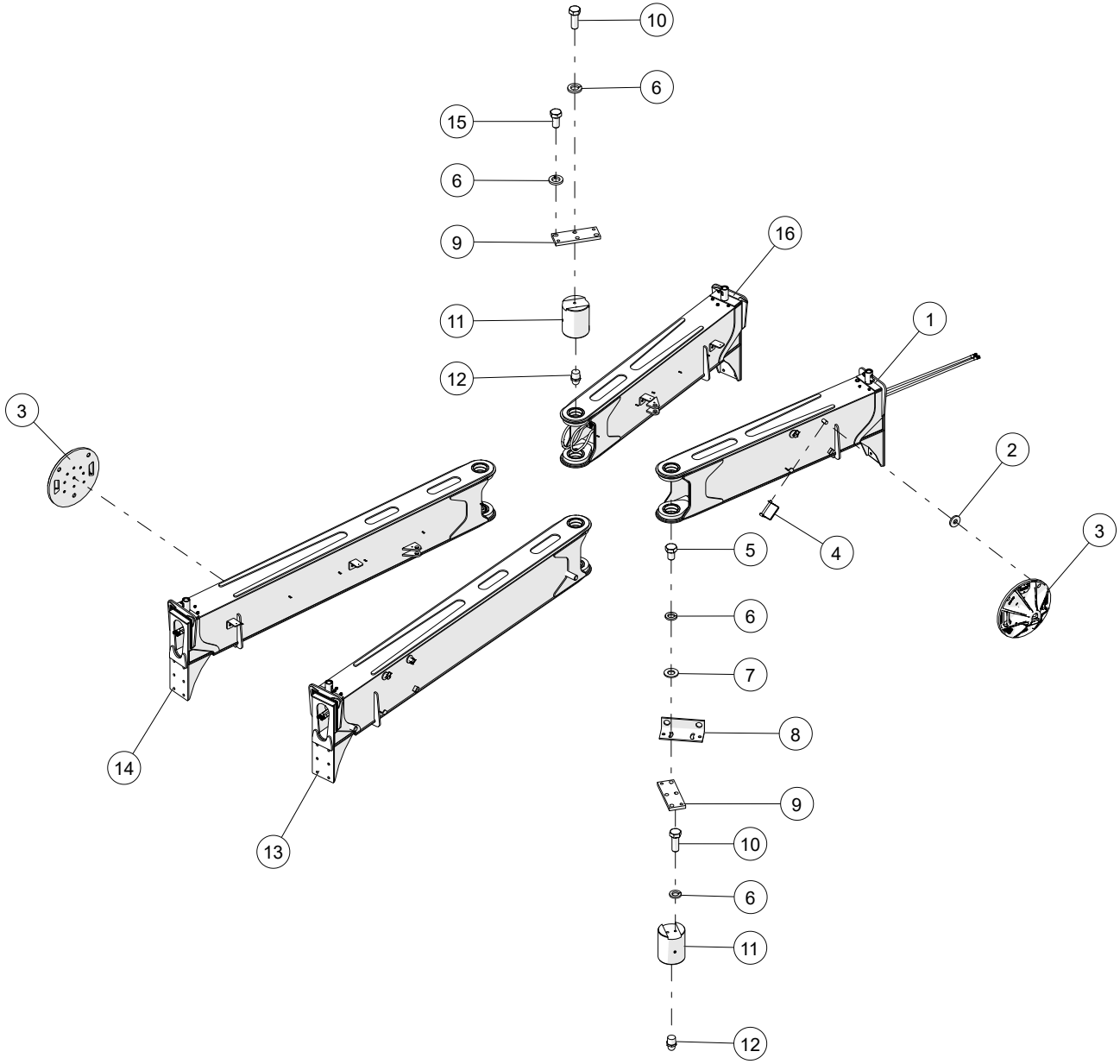

WHEN ORDERING PARTS, SPECIFY MODEL NUMBER, SERIAL NUMBER AND DESCRIPTION OF PARTS REQUIRED

OUTRIGGER INSTALLATION

ITEM	PART NUMBER	DESCRIPTION	QUANTITY	NOTES
	1032975	**OUTRIGGER INSTALLATION**		
1	**1033903**	OUTRIGGER ASSY-REAR LH	1	SEE PAGE 239
2	18Z2279-D3	RUBBER WASHER	8	
3	1033975	OUTRIGGER PAD, 24" SAUBER 2424-LKA	4	
4	19Z286-D2	LOCK PIN WITH SQUARE WIRE	8	
5	HHCS-C5007505Z0	HEX HEAD CAP SCREW, 1/2-13 X 3/4 LEN, GR5, ZN	4	
6	WSH4-X5000008Z0	SPIRAL LOCK WASHER, 1/2, GR8, ZN	36	
7	WSH2-X5000008Z0	SAE WASHER, 1/2, GR8, ZN	4	
8	T118684	BRACKET, SENSOR MOUNT	4	
9	T130864	PLATE	8	
10	HHCS-C500A375Z0	HEX HEAD CAP SCREW, 1/2-13 X 1 3/8 LEN, GR5, ZN	20	
11	T130879	PIN, 5 INCH DIAMETER	8	
12	T148483	.250 NPT 90 DEG GREASE FITTING	8	
13	**1033909**	OUTRIGGER ASSY- FRONT LH	1	SEE PAGE 241
14	**1033915**	OUTRIGGER ASSY- FRONT RH	1	SEE PAGE 243
15	HHCS-C500A005Z0	HEX HEAD CAP SCREW, 1/2-13 X 1 LEN, GR5, ZN	12	
16	**1033918**	OUTRIGGER ASSY, REAR RH	1	SEE PAGE 245

WHEN ORDERING PARTS, SPECIFY MODEL NUMBER, SERIAL NUMBER AND DESCRIPTION OF PARTS REQUIRED

OUTRIGGER ASSEMBLY-REAR LH

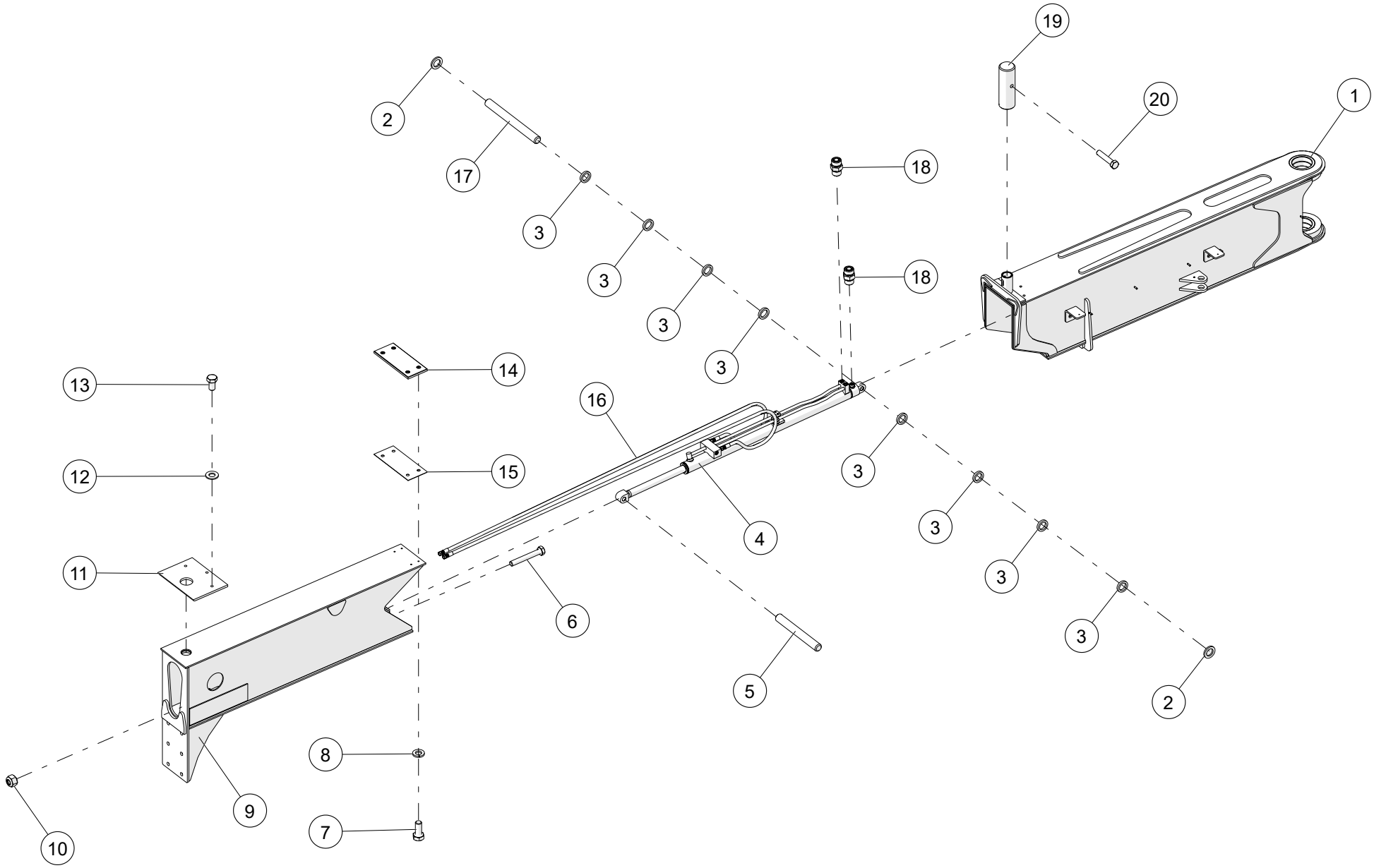

WHEN ORDERING PARTS, SPECIFY MODEL NUMBER, SERIAL NUMBER AND DESCRIPTION OF PARTS REQUIRED

OUTRIGGER ASSEMBLY-REAR LH

ITEM	PART NUMBER	DESCRIPTION	QUANTITY	NOTES
	1033903	**OUTRIGGER ASSY-REAR LH**		
1	1033482	LH PRIMARY ARM WELDMENT, REAR	1	
2	1209-107	WASHER	2	
3	706-8973	SPACER	8	
4	T163586	O/R EXTEND CYLINDER	1	
5	T113714	PIN, 1.00 X 8.38	1	
6	HHCS-C313B258R0	HEX HEAD CAP SCREW, 5/16-18 X 2 1/4 LEN, GR8, NF	4	
7	HHCS-C3137508Z0	HEX HEAD CAP SCREW, 5/16-18 X 3/4 LEN, GR8, ZN	4	
8	WSH4-X3130008Z0	SPIRAL LOCK WASHER, 5/16, GR8, ZN	4	
9	1033495	BEAM WELDMENT, REAR SECONDARY	1	
10	NUT3-C3130005Z0	NYLON LOCK NUT, 5/16-18, GR5, ZN	4	
11	T116744	PLATE, SPACER	1	
12	WSH1-X5000008Z0	WASHER, 1/2, GR8, ZN	3	
13	HHCS-C5008758Z0	HEX HEAD CAP SCREW, 1/2-13 X 7/8 LEN, GR8, ZN	3	
14	T117939	WEAR PAD, 9.375 X 4.00 X .375	1	
15	T126301	SPACER, OUTRIGGER	1	
16	1034642	HOSE,-8,3000,FOFS-8SW/FOFS-8SW,126.97	2	
17	T113713	PIN, 1.00 X 10.38	1	
18	1010076	ADAPTER, MOFS-8/MORB-8	5	
19	T116348	LOCK ROD	1	
20	HHCS-C500B505Z0	HEX HEAD CAP SCREW, 1/2-13 X 2 1/2 LEN, GR5, ZN	1	

WHEN ORDERING PARTS, SPECIFY MODEL NUMBER, SERIAL NUMBER AND DESCRIPTION OF PARTS REQUIRED

OUTRIGGER ASSEMBLY FRONT- RH

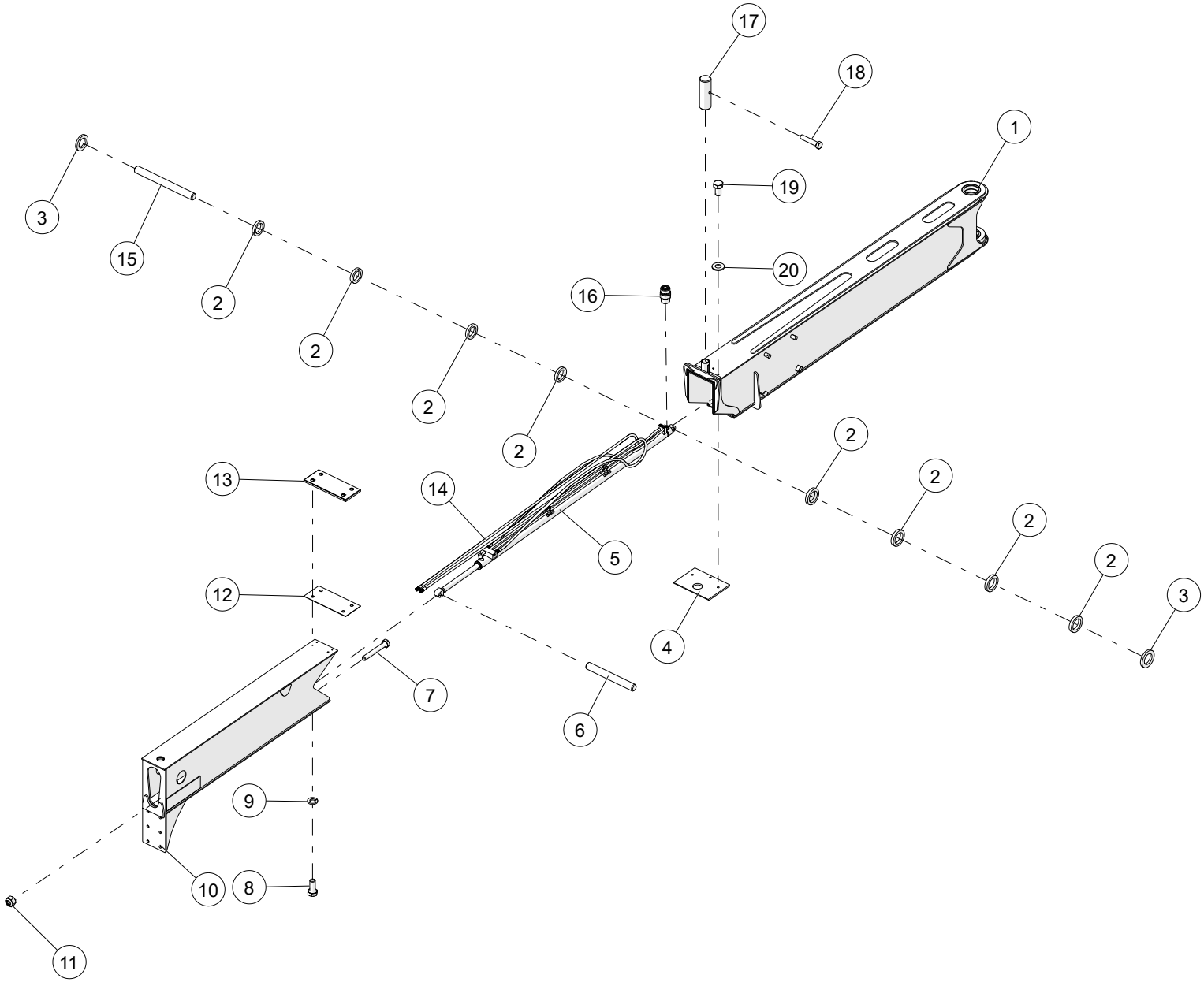

WHEN ORDERING PARTS, SPECIFY MODEL NUMBER, SERIAL NUMBER AND DESCRIPTION OF PARTS REQUIRED

OUTRIGGER ASSEMBLY FRONT- RH

ITEM	PART NUMBER	DESCRIPTION	QUANTITY	NOTES
	1033909	**OUTRIGGER ASSEMBLY FRONT- RH**		
1	1033443	LH PRIMARY ARM WELDMENT, FRONT	1	
2	706-8973	SPACER	8	
3	1209-107	WASHER	2	
4	T116744	PLATE, SPACER	1	
5	T163585	O/R EXTEND CYLINDER	1	
6	T113714	PIN, 1.00 X 8.38	1	
7	HHCS-C313B255Z0	HEX HEAD CAP SCREW, 5/16-18 X 2 1/4 LEN, GR5, ZN	4	
8	HHCS-C3137505Z0	HEX HEAD CAP SCREW, 5/16-18 X 3/4 LEN, GR5, ZN	4	
9	WSH4-X3130008Z0	SPIRAL LOCK WASHER, 5/16, GR8, ZN	4	
10	1033497	BEAM WELDMENT, FRONT SECONDARY	1	
11	NUT3-C3130005Z0	NYLON LOCK NUT, 5/16-18, GR5, ZN	4	
12	T126301	SPACER, OUTRIGGER	1	
13	T117939	WEAR PAD, 9.375 X 4.00 X .375	1	
14	1034647	HOSE,-8,3000,FOFS-8SW/FOFS-8SW,143.19	2	
15	T113713	PIN, 1.00 X 10.38	1	
16	1010076	ADAPTER, MOFS-8/MORB-8	5	
17	T116348	LOCK ROD	1	
18	HHCS-C500B505Z0	HEX HEAD CAP SCREW, 1/2-13 X 2 1/2 LEN, GR5, ZN	1	
19	HHCS-C5008758Z0	HEX HEAD CAP SCREW, 1/2-13 X 7/8 LEN, GR8, ZN	3	
20	WSH1-X5000008Z0	WASHER, 1/2, GR8, ZN	3	

WHEN ORDERING PARTS, SPECIFY MODEL NUMBER, SERIAL NUMBER AND DESCRIPTION OF PARTS REQUIRED

OUTRIGGER ASSEMBLY- FRONT LH

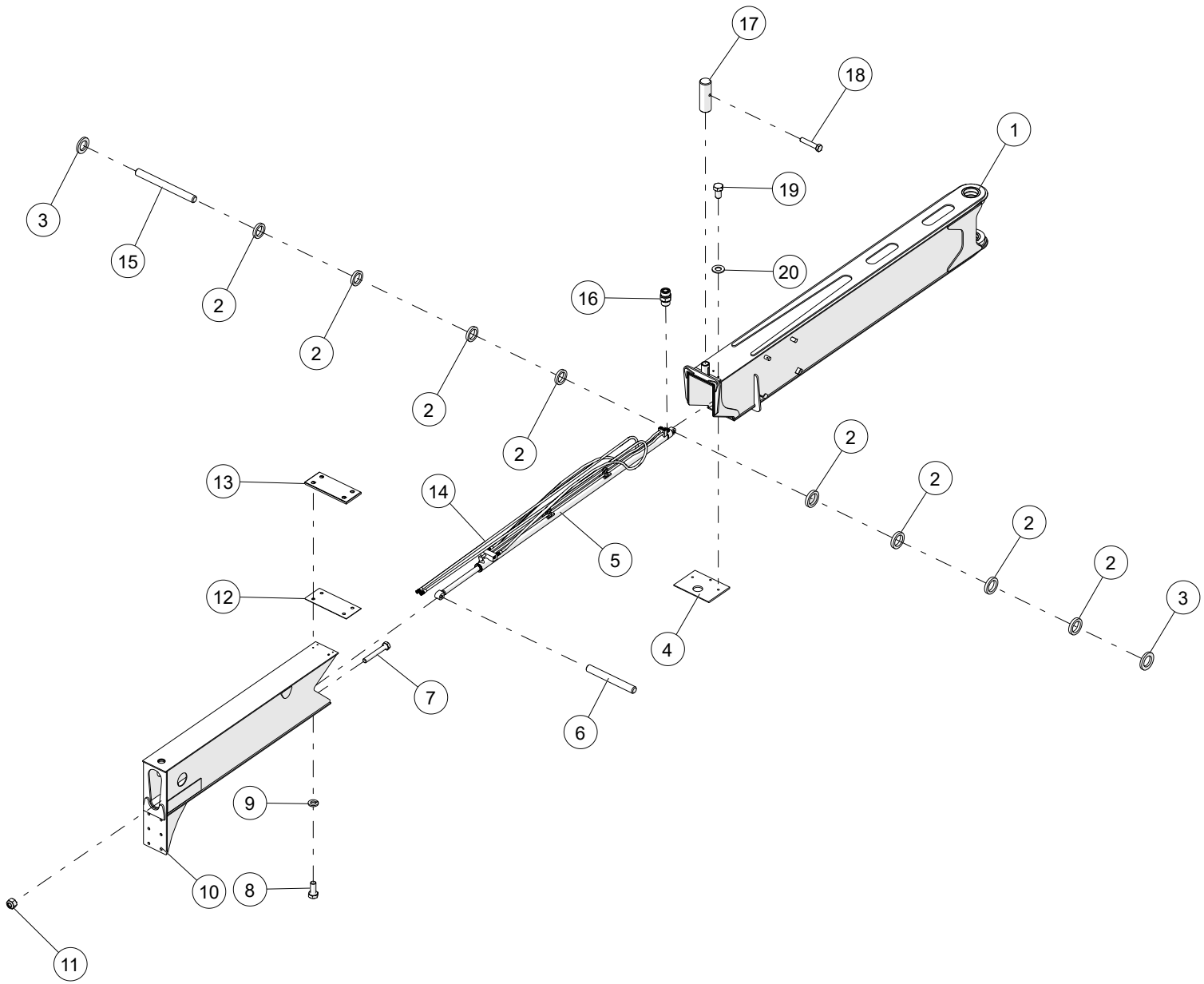

WHEN ORDERING PARTS, SPECIFY MODEL NUMBER, SERIAL NUMBER AND DESCRIPTION OF PARTS REQUIRED

OUTRIGGER ASSEMBLY- FRONT LH

ITEM	PART NUMBER	DESCRIPTION	QUANTITY	NOTES
	1033915	**OUTRIGGER ASSEMBLY- FRONT LH**		
1	1033462	RH PRIMARY ARM WELDMENT, FRONT	1	
2	706-8973	SPACER	8	
3	1209-107	WASHER	2	
4	T116744	PLATE, SPACER	1	
5	T163585	O/R EXTEND CYLINDER	1	
6	T113714	PIN, 1.00 X 8.38	1	
7	HHCS-C313B258R0	HEX HEAD CAP SCREW, 5/16-18 X 2 1/4 LEN, GR8, NF	4	
8	HHCS-C3137508Z0	HEX HEAD CAP SCREW, 5/16-18 X 3/4 LEN, GR8, ZN	4	
9	WSH4-X3130008Z0	SPIRAL LOCK WASHER, 5/16, GR8, ZN	4	
10	1033497	BEAM WELDMENT, FRONT SECONDARY	1	
11	NUT3-C3130005Z0	NYLON LOCK NUT, 5/16-18, GR5, ZN	4	
12	T126301	SPACER, OUTRIGGER	1	
13	T117939	WEAR PAD, 9.375 X 4.00 X .375	1	
14	1034647	HOSE,-8,3000,FOFS-8SW/FOFS-8SW,143.19	2	
15	T113713	PIN, 1.00 X 10.38	1	
16	1010076	ADAPTER, MOFS-8/MORB-8	5	
17	T116348	LOCK ROD	1	
18	HHCS-C500B505Z0	HEX HEAD CAP SCREW, 1/2-13 X 2 1/2 LEN, GR5, ZN	1	
19	HHCS-C5008758Z0	HEX HEAD CAP SCREW, 1/2-13 X 7/8 LEN, GR8, ZN	3	
20	WSH1-X5000008Z0	WASHER, 1/2, GR8, ZN	3	

WHEN ORDERING PARTS, SPECIFY MODEL NUMBER, SERIAL NUMBER AND DESCRIPTION OF PARTS REQUIRED

OUTRIGGER ASSEMBLY REAR -RH

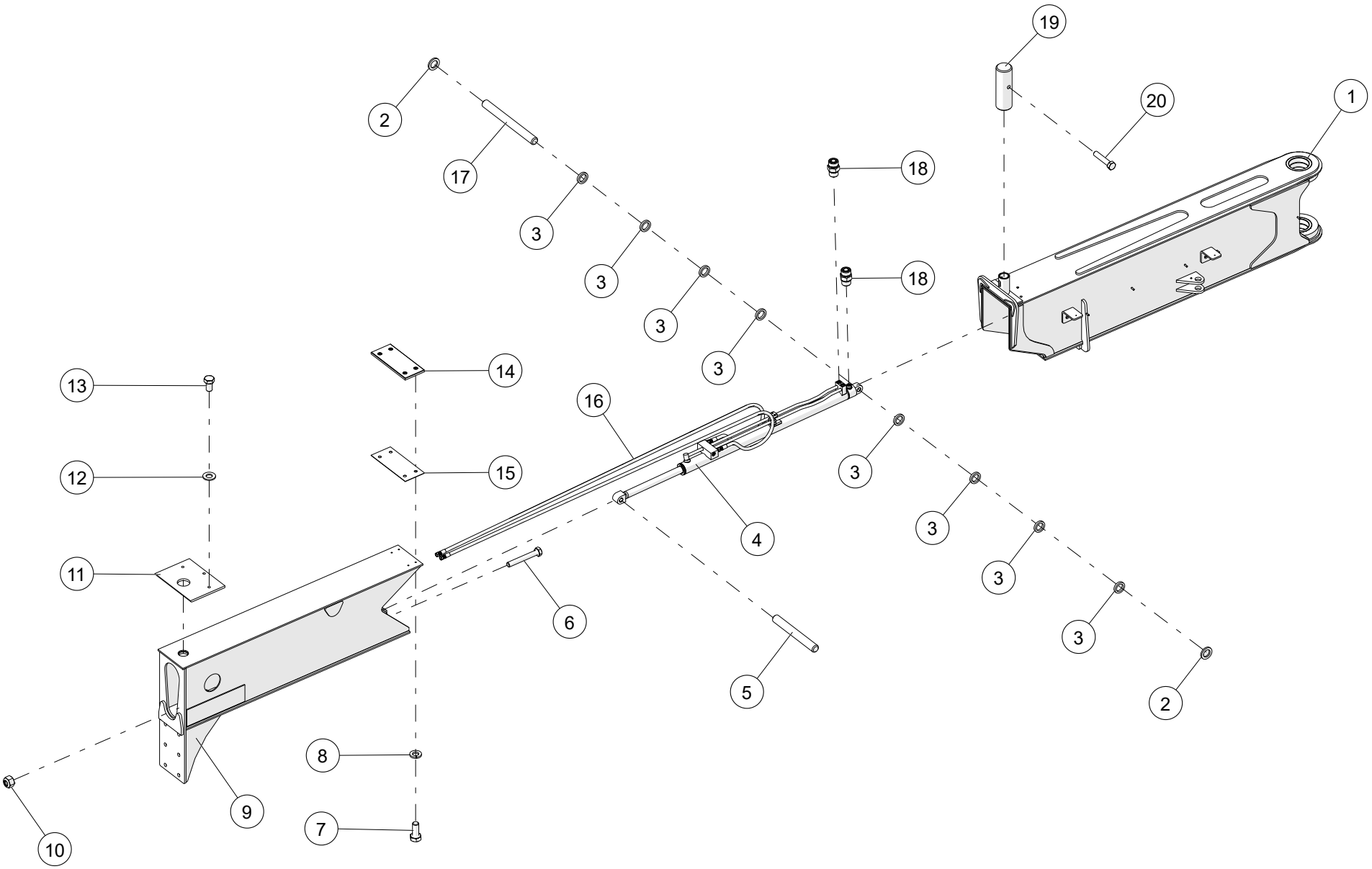

WHEN ORDERING PARTS, SPECIFY MODEL NUMBER, SERIAL NUMBER AND DESCRIPTION OF PARTS REQUIRED

OUTRIGGER ASSEMBLY REAR -RH

ITEM	PART NUMBER	DESCRIPTION	QUANTITY	NOTES
	1033918	**OUTRIGGER ASSEMBLY - REAR RH**		
1	1033432	RH PRIMARY ARM WELDMENT, REAR	1	
2	1209-107	WASHER	2	
3	706-8973	SPACER	8	
4	T163586	O/R EXTEND CYLINDER	1	
5	T113714	PIN, 1.00 X 8.38	1	
6	HHCS-C313B255Z0	HEX HEAD CAP SCREW, 5/16-18 X 2 1/4 LEN, GR5, ZN	4	
7	HHCS-C3137505Z0	HEX HEAD CAP SCREW, 5/16-18 X 3/4 LEN, GR5, ZN	4	
8	WSH4-X3130008Z0	SPIRAL LOCK WASHER, 5/16, GR8, ZN	4	
9	1033495	BEAM WELDMENT, REAR SECONDARY	1	
10	NUT3-C3130005Z0	NYLON LOCK NUT, 5/16-18, GR5, ZN	4	
11	T116744	PLATE, SPACER	1	
12	WSH1-X5000008Z0	WASHER, 1/2, GR8, ZN	3	
13	HHCS-C5008758Z0	HEX HEAD CAP SCREW, 1/2-13 X 7/8 LEN, GR8, ZN	3	
14	T117939	WEAR PAD, 9.375 X 4.00 X .375	1	
15	T126301	SPACER, OUTRIGGER	1	
16	1034642	HOSE,-8,3000,FOFS-8SW/FOFS-8SW,126.97	2	
17	T113713	PIN, 1.00 X 10.38	1	
18	1010076	ADAPTER, MOFS-8/MORB-8	5	
19	T116348	LOCK ROD	1	
20	HHCS-C500B505Z0	HEX HEAD CAP SCREW, 1/2-13 X 2 1/2 LEN, GR5, ZN	1	

WHEN ORDERING PARTS, SPECIFY MODEL NUMBER, SERIAL NUMBER AND DESCRIPTION OF PARTS REQUIRED

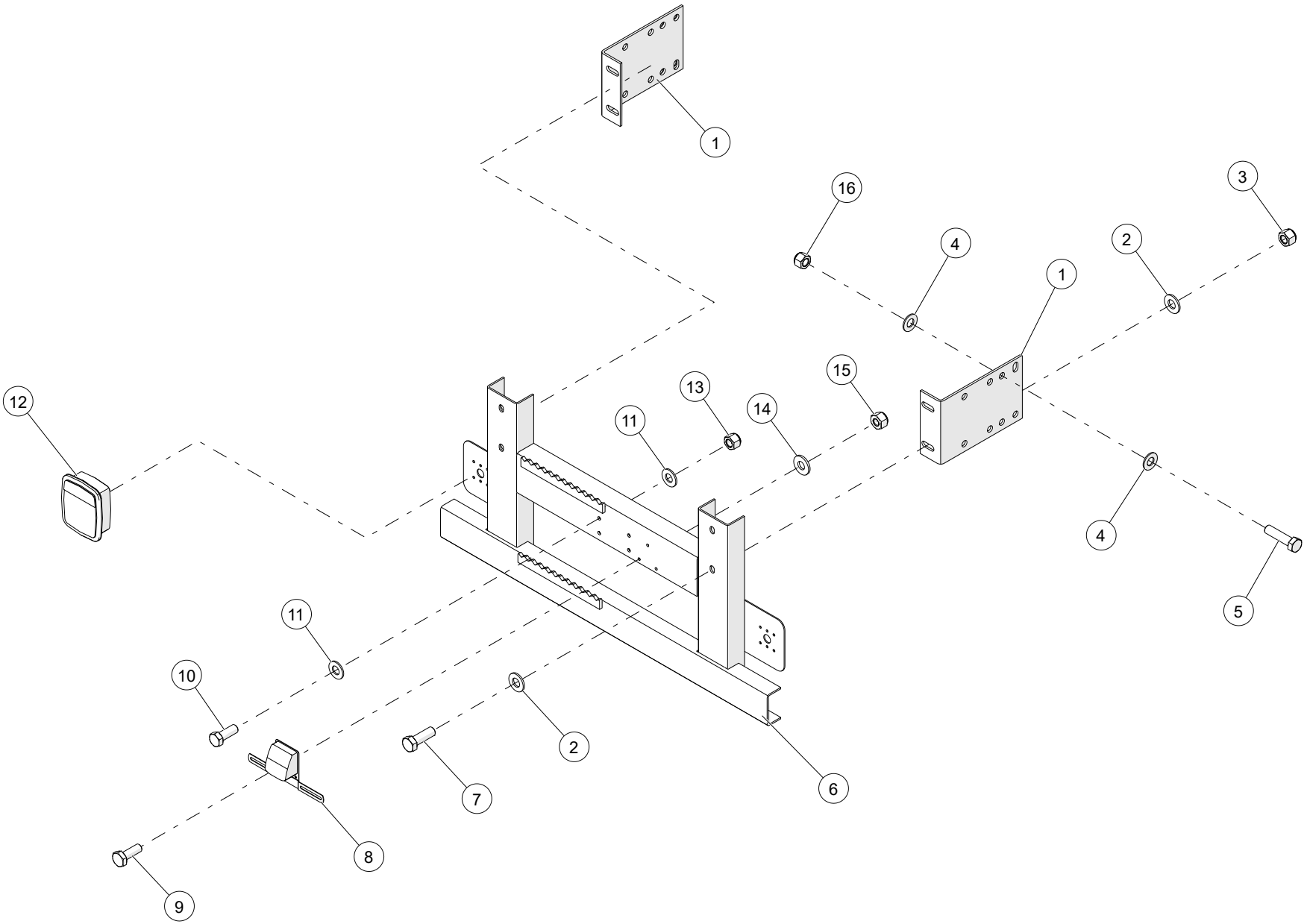

WHEN ORDERING PARTS, SPECIFY MODEL NUMBER, SERIAL NUMBER AND DESCRIPTION OF PARTS REQUIRED

REAR BUMPER ASSEMBLY

ITEM	PART NUMBER	DESCRIPTION	QUANTITY	NOTES
	T122108	**REAR BUMPER ASSEMBLY**		
1	T122109	BRACKET, REAR BUMPER	2	
2	WSH2-X5000008Z0	SAE WASHER, 1/2, GR8, ZN	8	
3	NUT3-C5000005Z0	NYLON LOCK NUT, 1/2-13, GR5, ZN	4	
4	WSH1-X6250008Z0	WASHER, 5/8, GR8, ZN	16	
5	HHCS-C625B508M0	HEX HEAD CAP SCREW, 5/8-11 X 2 1/2 LEN, GR8, MA	8	
6	T122111	REAR BUMPER WELDMENT	1	
7	HHCS-C500A505Z0	HEX HEAD CAP SCREW, 1/2-13 X 1 1/2 LEN, GR5, ZN	4	
8	11731	LAMP LICENSE BRACKET	1	
9	HHCS-C2507505Z0	HEX HEAD CAP SCREW, 1/4-20 X 3/4 LEN, GR5, ZN	2	
10	HHCS-C375A005Z0	HEX HEAD CAP SCREW, 3/8-16 X 1 LEN, GR5, ZN	4	
11	WSH1-X3750008Z0	WASHER, 3/8, GR8, ZN	8	
12	T120619	TAIL LIGHT,MULTI FUNCTION	2	
13	NUT3-C3750005Z0	NYLON LOCK NUT, 3/8-16, GR5, ZN	4	
14	WSH1-X2500008Z0	WASHER, 1/4, GR8, ZN	2	
15	NUT3-C2500005Z0	NYLON LOCK NUT, 1/4-20, GR5, ZN	2	
16	NUT3-C6250002M0	NYLON LOCK NUT, 5/8-11, GR2, MA	8	

WHEN ORDERING PARTS, SPECIFY MODEL NUMBER, SERIAL NUMBER AND DESCRIPTION OF PARTS REQUIRED

NON - ILLUSTRATED PAGE

LOWER ELECTRIC ASSEMBLY

ITEM	PART NUMBER	DESCRIPTION	QUANTITY	NOTES
	1027167	**LOWER ELECTRICAL ASSEMBLY**		
1	1008353	TEMP SENSOR	1	
2	1008366	SENSOR, HYDRAULIC PRESSUR 6000 PSI	2	
3	1034145	HARNESS, TAIL LIGHT	1	
4	1032425	HARNESS LOWER	1	
5	714A1432	ALARM, BACKUP/OR	1	
6	T113654	BRACKET, FUSE	1	
7	T118879	SENSOR, INDUCTIVE	8	
8	T120217	PROXIMITY SWITCH	4	
9	T133237	HARNESS, REAR O/R SENSOR	2	
10	T133823	HARNESS, FRONT O/R SENSOR	2	
11	T165470	12V 3/4" RED SIDE MARKER LIGHT	2	
12	T165471	12V 3/4" AMBER SIDE MARKER LIGHT	4	

WHEN ORDERING PARTS, SPECIFY MODEL NUMBER, SERIAL NUMBER AND DESCRIPTION OF PARTS REQUIRED

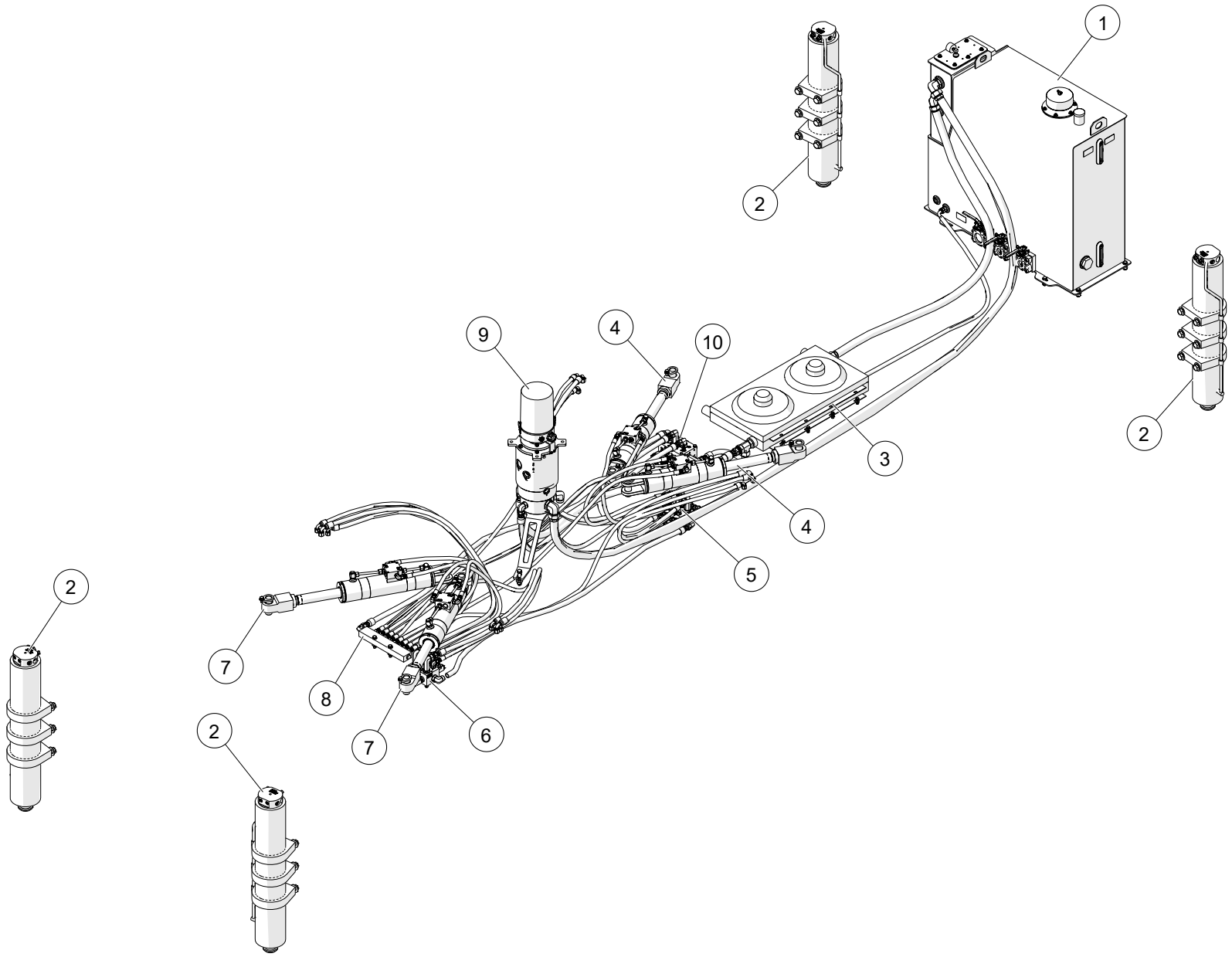

WHEN ORDERING PARTS, SPECIFY MODEL NUMBER, SERIAL NUMBER AND DESCRIPTION OF PARTS REQUIRED

LOWER HYDRAULIC ASSEMBLY

ITEM	PART NUMBER	DESCRIPTION	QUANTITY	NOTES
	1034605	**LOWER HYDRAULICS**		
1	**1-ASSEMBLY**	FOR REFERENCE ONLY	1	SEE PAGE 253
2	**2-ASSEMBLY**	FOR REFERENCE ONLY	4	SEE PAGE 255
3	**3-ASSEMBLY**	FOR REFERENCE ONLY	1	SEE PAGE 257
4	**4-ASSEMBLY**	FOR REFERENCE ONLY	2	SEE PAGE 259
5	**5-ASSEMBLY**	FOR REFERENCE ONLY	1	SEE PAGE 261
6	**6-ASSEMBLY**	FOR REFERENCE ONLY	1	SEE PAGE 265
7	**7-ASSEMBLY**	FOR REFERENCE ONLY	2	SEE PAGE 269
8	**8-ASSEMBLY**	FOR REFERENCE ONLY	1	SEE PAGE 271
9	**9-ASSEMBLY**	FOR REFERENCE ONLY	1	SEE PAGE 273
10	**10-ASSEMBLY**	FOR REFERENCE ONLY	1	SEE PAGE 277

WHEN ORDERING PARTS, SPECIFY MODEL NUMBER, SERIAL NUMBER AND DESCRIPTION OF PARTS REQUIRED

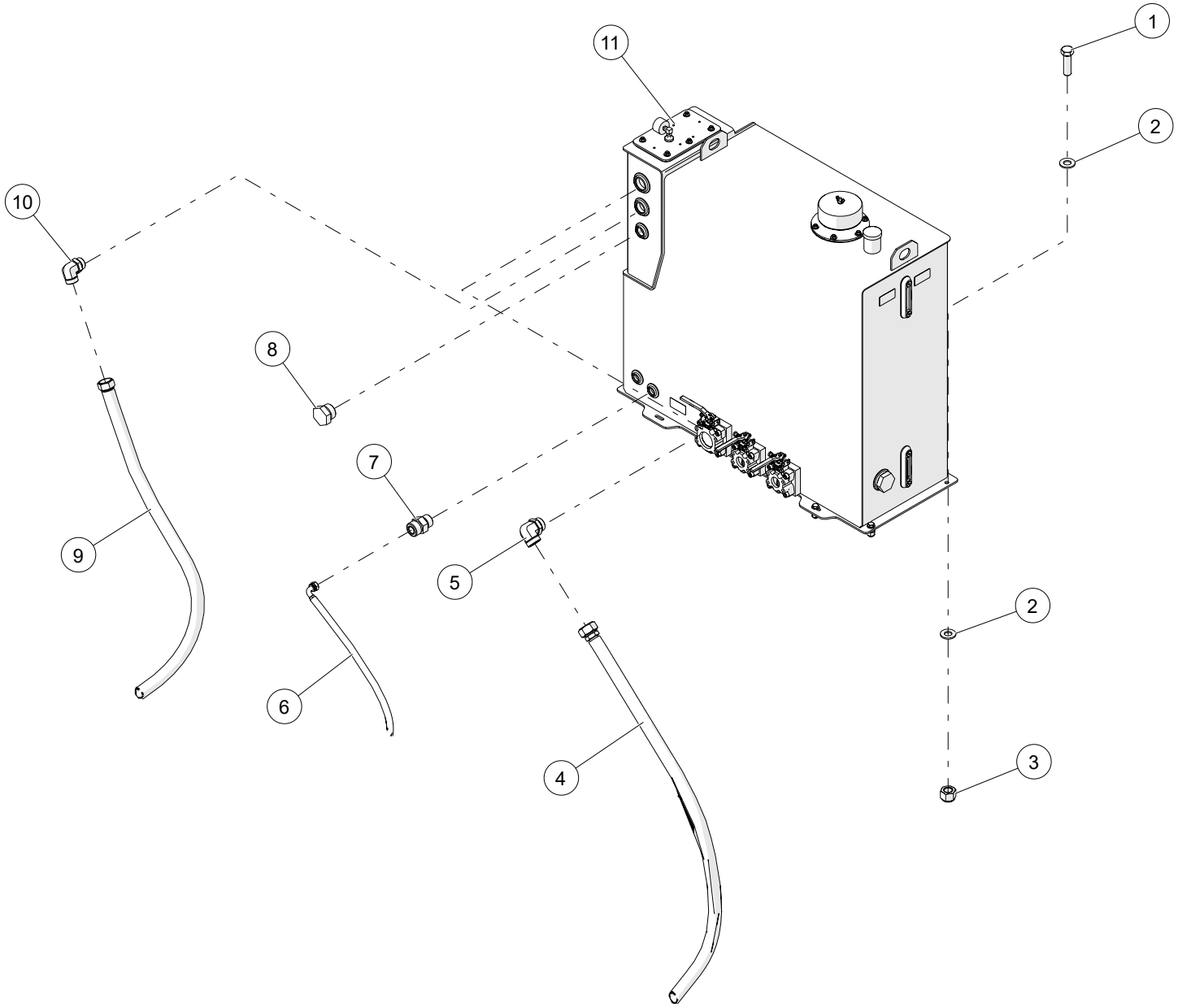

WHEN ORDERING PARTS, SPECIFY MODEL NUMBER, SERIAL NUMBER AND DESCRIPTION OF PARTS REQUIRED

ITEM	PART NUMBER	DESCRIPTION	QUANTITY	NOTES
	1-ASSEMBLY	**FOR REFERENCE ONLY**		
1	HHCS-C500A758Z0	HEX HEAD CAP SCREW, 1/2-13 X 1 3/4 LEN, GR8, ZN	5	
2	WSH1-X5000008Z0	WASHER, 1/2, GR8, ZN	14	
3	NUT3-C6250008Z0	NYLON LOCK NUT, 5/8-11, GR8, ZN	5	
4	1034762	HOSE, -24, 150 PSI, FOFS-24SW/FOFS-24SW, 220	1	
5	1014029	ELBOW, 90, MOFS-24/MORB-24	2	
6	1034770	HOSE, -10, 300 PSI, 90 FOFS-10SW/ FOFS-10SW, 182.75	1	
7	1010081	ADAPTER, MOFS-10/MORB-10	1	
8	1019670	PLUG, HEX, ORB-12	1	
9	1034608	HOSE, -20, 200 PSI FOFS-20SW/ FOFS-20SW, 97.5	1	
10	1014064	ELBOW,90,MOFS-20/MORB-20	2	
11	1008342	TANK, HYDRAULIC	1	

WHEN ORDERING PARTS, SPECIFY MODEL NUMBER, SERIAL NUMBER AND DESCRIPTION OF PARTS REQUIRED

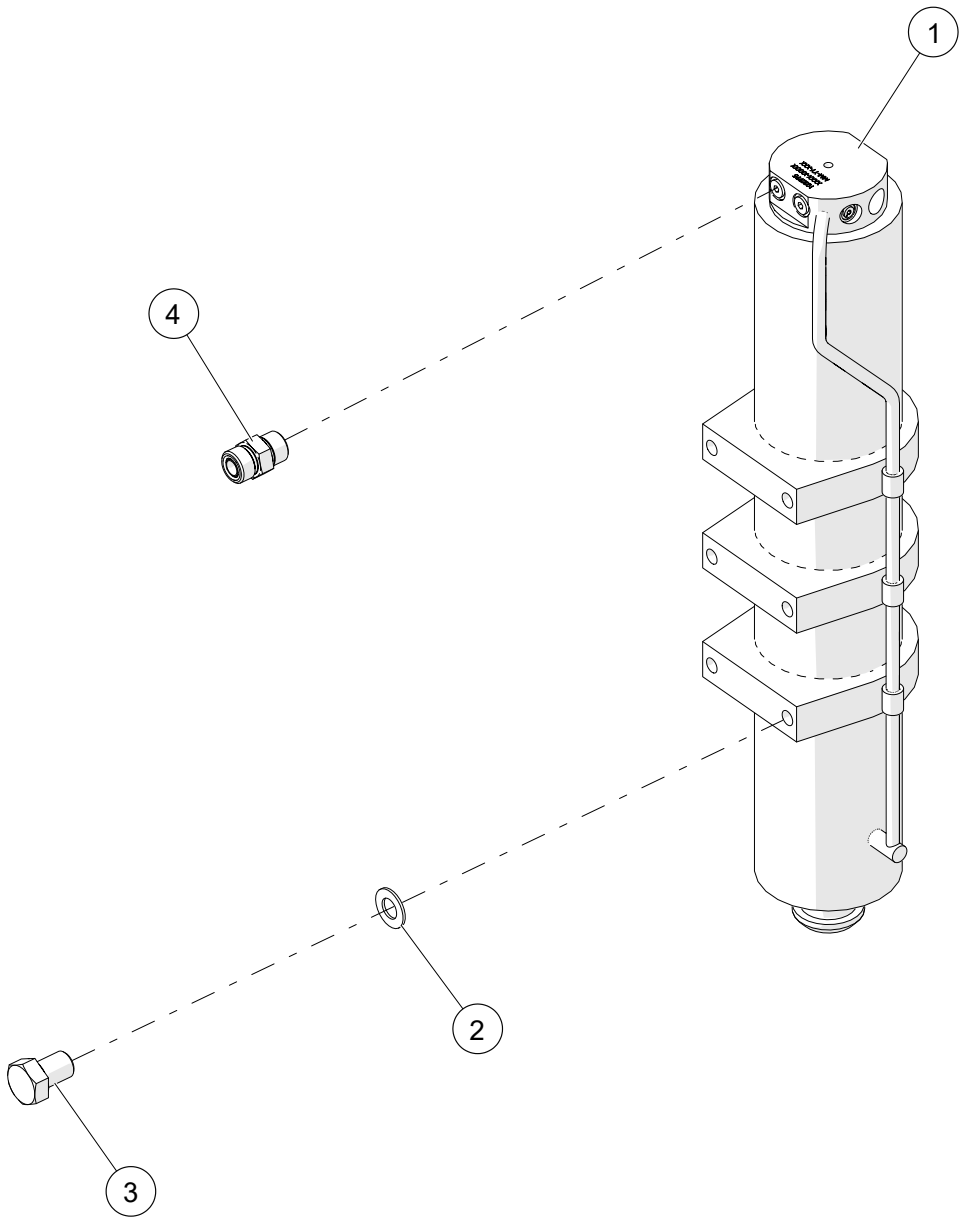

WHEN ORDERING PARTS, SPECIFY MODEL NUMBER, SERIAL NUMBER AND DESCRIPTION OF PARTS REQUIRED

ITEM	PART NUMBER	DESCRIPTION	QUANTITY	NOTES
	2-ASSEMBLY	**FOR REFERENCE ONLY**		
1	1032995	CYLINDER, JACK	4	
2	WSH1-XA000008Z0	WASHER, 1, GR8, ZN	24	
3	HHCS-C875A258M0	HEX HEAD CAP SCREW, 7/8-9 X 1 1/4 LEN, GR8, MA	24	
4	1010076	ADAPTER, MOFS-8/MORB-8	18	

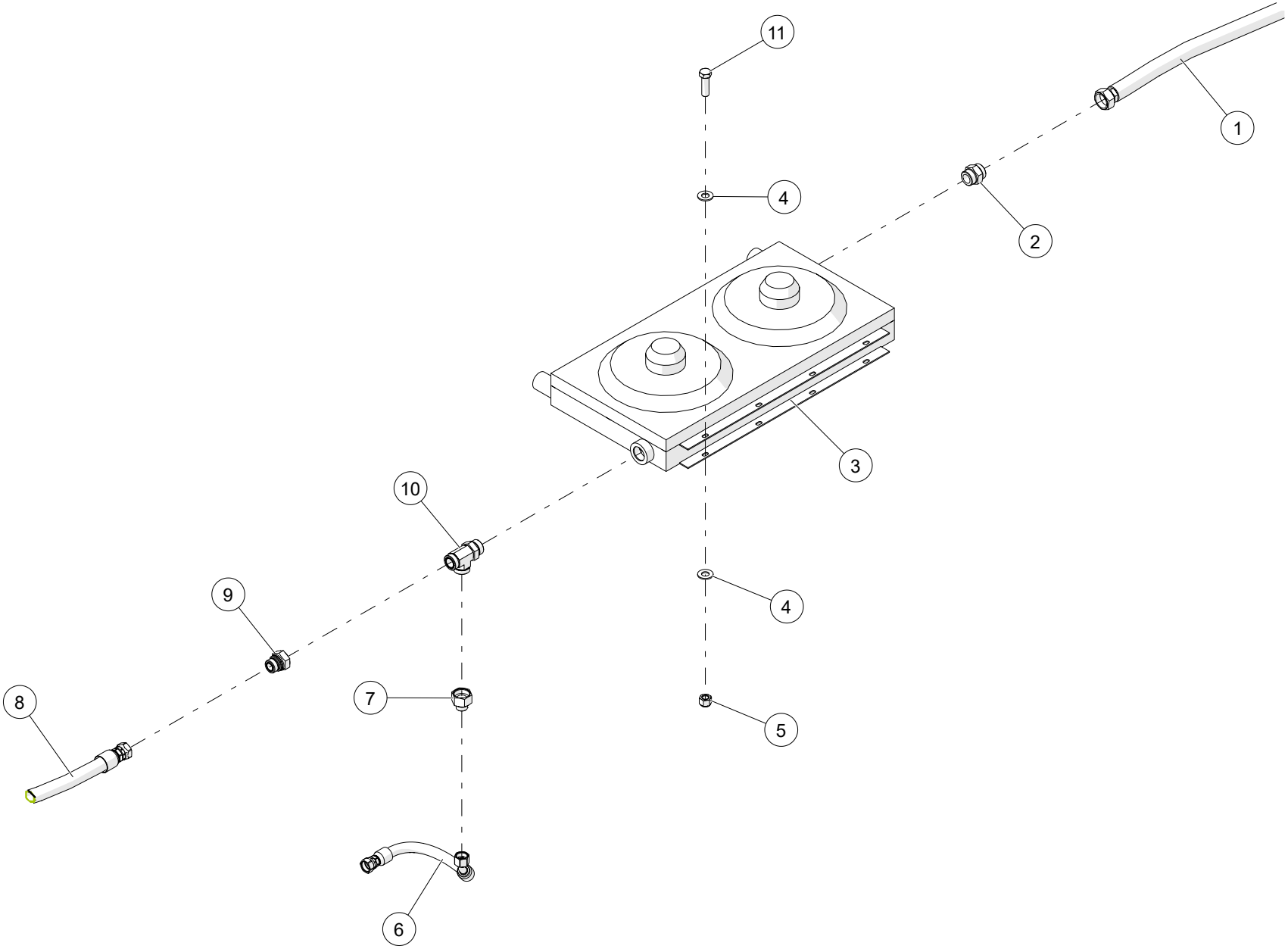

WHEN ORDERING PARTS, SPECIFY MODEL NUMBER, SERIAL NUMBER AND DESCRIPTION OF PARTS REQUIRED

ITEM	PART NUMBER	DESCRIPTION	QUANTITY	NOTES
	3-ASSEMBLY	**FOR REFERENCE ONLY**		
1	1034608	HOSE, -20, 200 PSI FOFS-20SW/ FOFS-20SW, 97.5	1	
2	1010098	ADAPTER, MOFS-20/MORB-20	1	
3	T113593	OIL COOLER	1	
4	WSH1-X3750008Z0	WASHER, 3/8, GR8, ZN	32	
5	NUT3-C3750005Z0	NYLON LOCK NUT, 3/8-16, GR5, ZN	14	
6	1041540	HOSE, -12,300, 45FOFS-12SW/FOFS-12SW,21.0	1	
7	1010023	ADAPTER, FOFS-20/MOFS-12	1	
8	1034676	HOSE, -16,250, FOFS-16SW/FOFS-16SW,72	1	
9	1010025	ADAPTER, FOFS-20/MOFS-16	1	
10	1018089	TEE, MOFS-20/MORB-20/MOFS-20	1	
11	HHCS-C375A255Z0	HEX HEAD CAP SCREW, 3/8-16 X 1 1/4 LEN, GR5, ZN	8	

WHEN ORDERING PARTS, SPECIFY MODEL NUMBER, SERIAL NUMBER AND DESCRIPTION OF PARTS REQUIRED

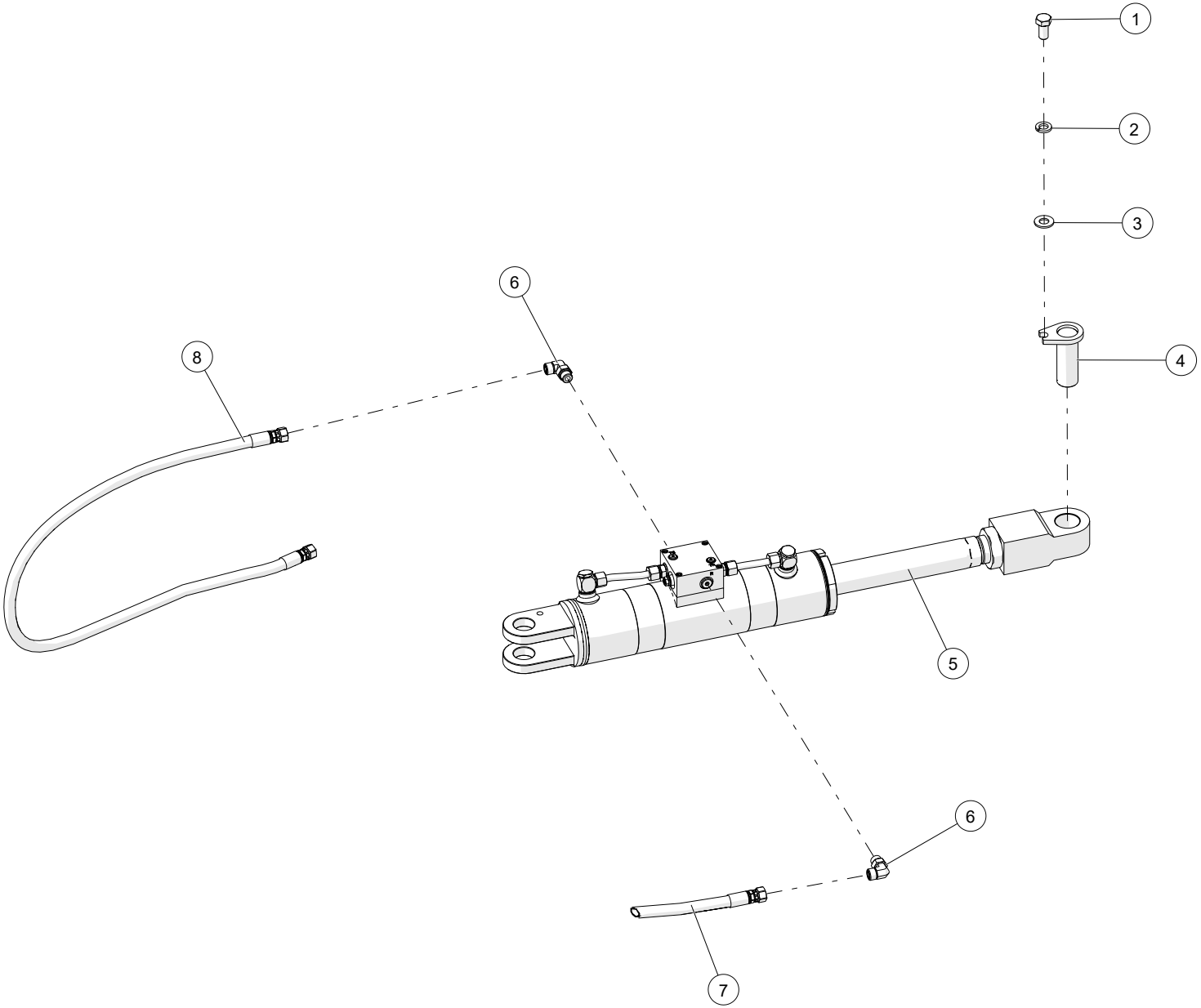

WHEN ORDERING PARTS, SPECIFY MODEL NUMBER, SERIAL NUMBER AND DESCRIPTION OF PARTS REQUIRED

ITEM	PART NUMBER	DESCRIPTION	QUANTITY	NOTES
	4-ASSEMBLY	**FOR REFERENCE ONLY**		
1	HHCS-C500A005Z0	HEX HEAD CAP SCREW, 1/2-13 X 1 LEN, GR5, ZN	8	
2	WSH4-X5000008Z0	SPIRAL LOCK WASHER, 1/2, GR8, ZN	8	
3	WSH2-X5000008Z0	SAE WASHER, 1/2, GR8, ZN	8	
4	710F0412	PIN ASS'Y, STEER CYL	8	
5	T163587	SWING CYLINDER	2	
6	1014008	ELBOW, 90, MORB-8/MOFS-8	2	
7	1034696	HOSE, -8, 3000, FOFS-8SW/FOFS-8SW, 90	1	
8	1034698	HOSE, -8, 4000, FOFS-8SW/FOFS-8SW, 62.5	1	

WHEN ORDERING PARTS, SPECIFY MODEL NUMBER, SERIAL NUMBER AND DESCRIPTION OF PARTS REQUIRED

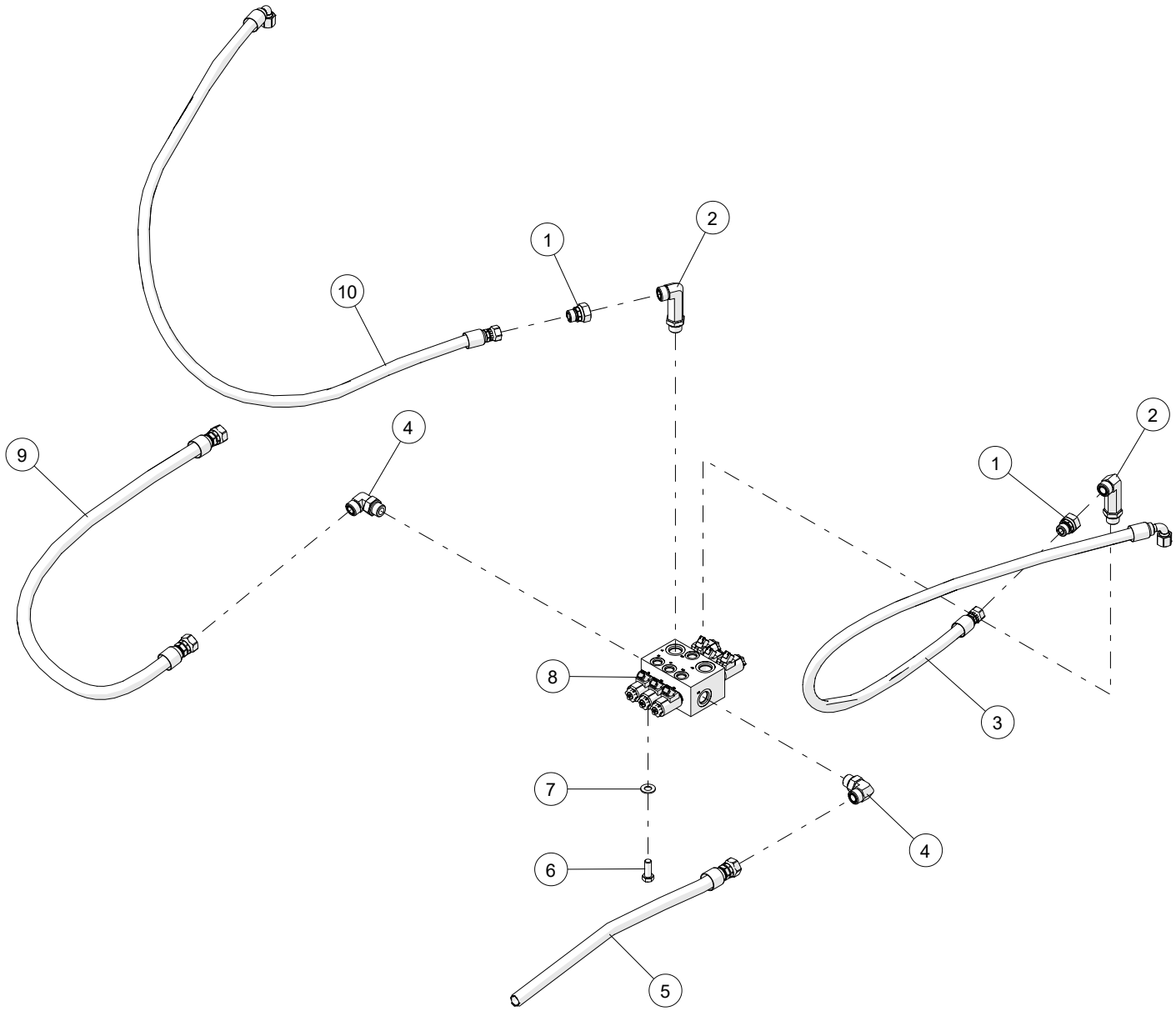

WHEN ORDERING PARTS, SPECIFY MODEL NUMBER, SERIAL NUMBER AND DESCRIPTION OF PARTS REQUIRED

ITEM	PART NUMBER	DESCRIPTION	QUANTITY	NOTES
	5-ASSEMBLY	**FOR REFERENCE ONLY**		
1	1010015	ADAPTER, FOFS-12/MOFS-10	4	
2	1014018	ELBOW, 90, MOFS-12/MORB-12, L	6	
3	1034716	HOSE, -10, 4000,90FOFS-10SW/FOFS-10SW, 71	1	
4	1014019	ELBOW, 90, MOFS-12/MORB-12	6	
5	1024737	HOSE, -12, 4000, FOFS-12SW/FOFS-12SW, 86.0	1	
6	HHCS-C375A005Z0	HEX HEAD CAP SCREW, 3/8-16 X 1 LEN, GR5, ZN	8	
7	WSH1-X3750008Z0	WASHER, 3/8, GR8, ZN	32	
8	1007211	O/R SELECTOR VALVE	2	
9	1027995	HOSE, -12, 3000, FOFS-12SW/FOFS-12SW, 65	1	
10	1034742	HOSE, -10, 4000, 90FOFS-10SW/FOFS-10SW, 84.25	1	

WHEN ORDERING PARTS, SPECIFY MODEL NUMBER, SERIAL NUMBER AND DESCRIPTION OF PARTS REQUIRED

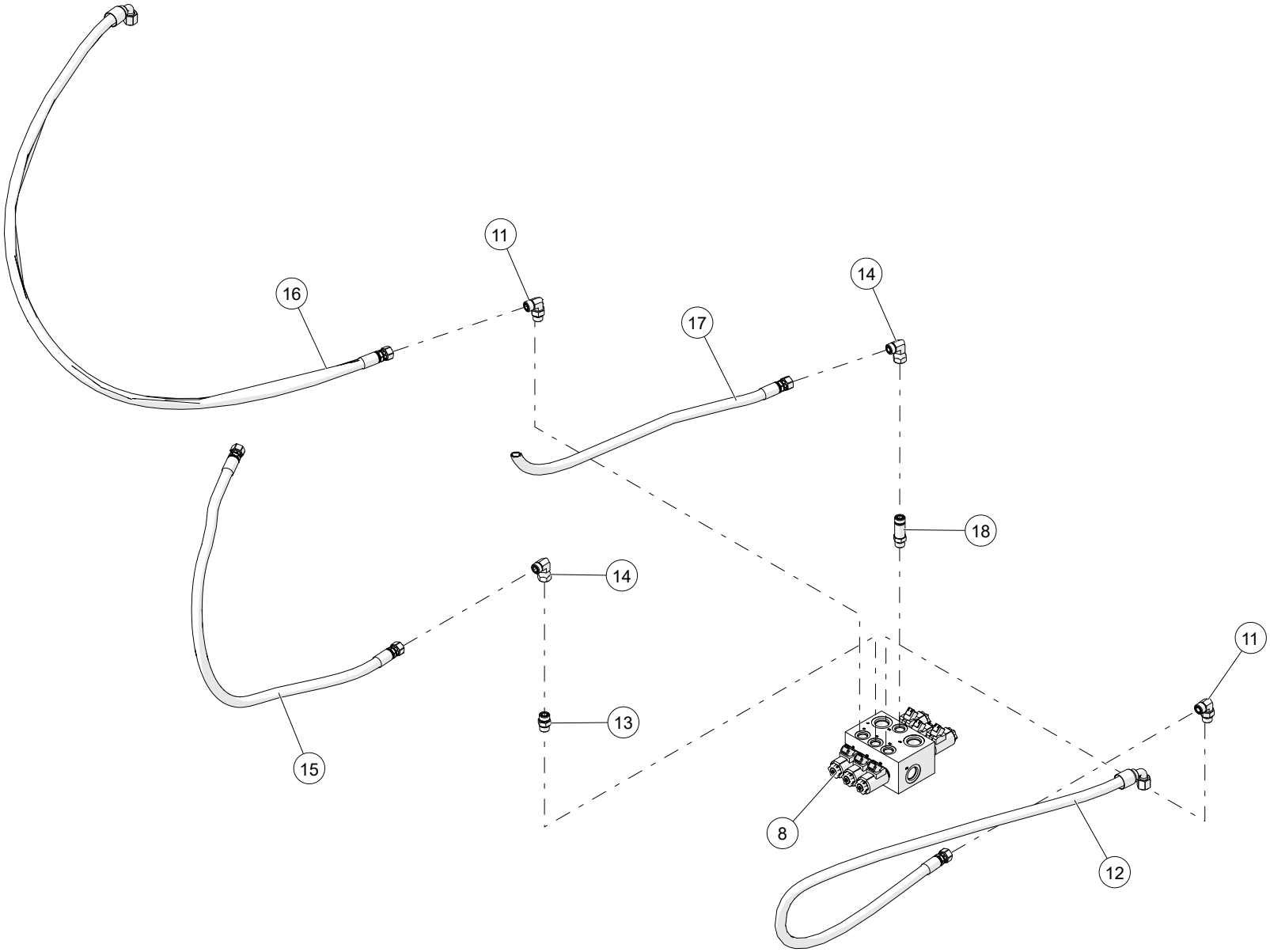

WHEN ORDERING PARTS, SPECIFY MODEL NUMBER, SERIAL NUMBER AND DESCRIPTION OF PARTS REQUIRED

ITEM	PART NUMBER	DESCRIPTION	QUANTITY	NOTES
	5-ASSEMBLY	**FOR REFERENCE ONLY**		
11	1014008	ELBOW, 90, MORB-8/MOFS-8	1	
12	1034713	HOSE, -8, 4000, 90FOFS-8SW/FOFS-8SW, 75.5	1	
13	1010076	ADAPTER, MOFS-8/MORB-8	18	
14	1014030	ELBOW, 90, MOFS-8/FOFS-8	1	
15	1034688	HOSE, -8, 4000, FOFS-8SW/FOFS-8SW, 78.5	1	
16	1034740	HOSE, -8, 4000, 90 FOFS-8SW/ FOFS-8SW, 73.75	1	
17	1034698	HOSE, -8, 4000, FOFS-8SW/FOFS-8SW, 62.5	1	
18	1010077	ADAPTER, MOFS-8/MORB-8, L	2	

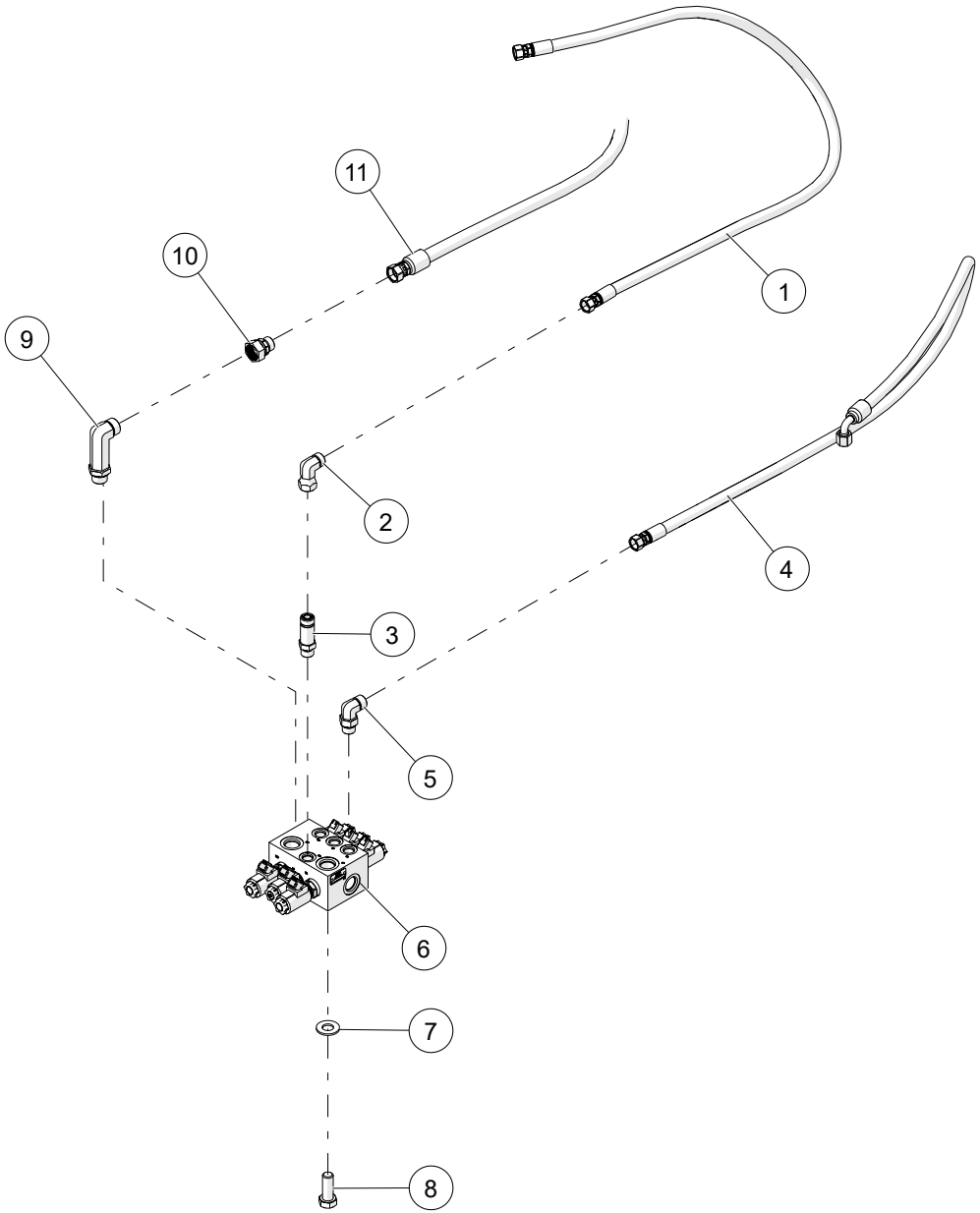

WHEN ORDERING PARTS, SPECIFY MODEL NUMBER, SERIAL NUMBER AND DESCRIPTION OF PARTS REQUIRED

ITEM	PART NUMBER	DESCRIPTION	QUANTITY	NOTES
	6-ASSEMBLY	**FOR REFERENCE ONLY**		
1	1034751	HOSE, -8, 3000, FOFS-8SW/ FOFS-8SW, 71.5	1	
2	1014030	ELBOW, 90, MOFS-8/FOFS-8	2	
3	1010077	ADAPTER, MOFS-8/MORB-8, L	2	
4	1034730	HOSE, -8, 4000, 90FOFS-8SW/FOFS-8SW, 78.5	1	
5	1014008	ELBOW, 90, MORB-8/MOFS-8	1	
6	1007211	O/R SELECTOR VALVE	2	
7	WSH1-X3750008Z0	WASHER, 3/8, GR8, ZN	32	
8	HHCS-C375A005Z0	HEX HEAD CAP SCREW, 3/8-16 X 1 LEN, GR5, ZN	8	
9	1014018	ELBOW, 90, MOFS-12/MORB-12, L	6	
10	1010015	ADAPTER, FOFS-12/MOFS-10	4	
11	1034744	HOSE, -10, 4000, FOFS-10SW/FOFS-10SW, 85	1	

WHEN ORDERING PARTS, SPECIFY MODEL NUMBER, SERIAL NUMBER AND DESCRIPTION OF PARTS REQUIRED

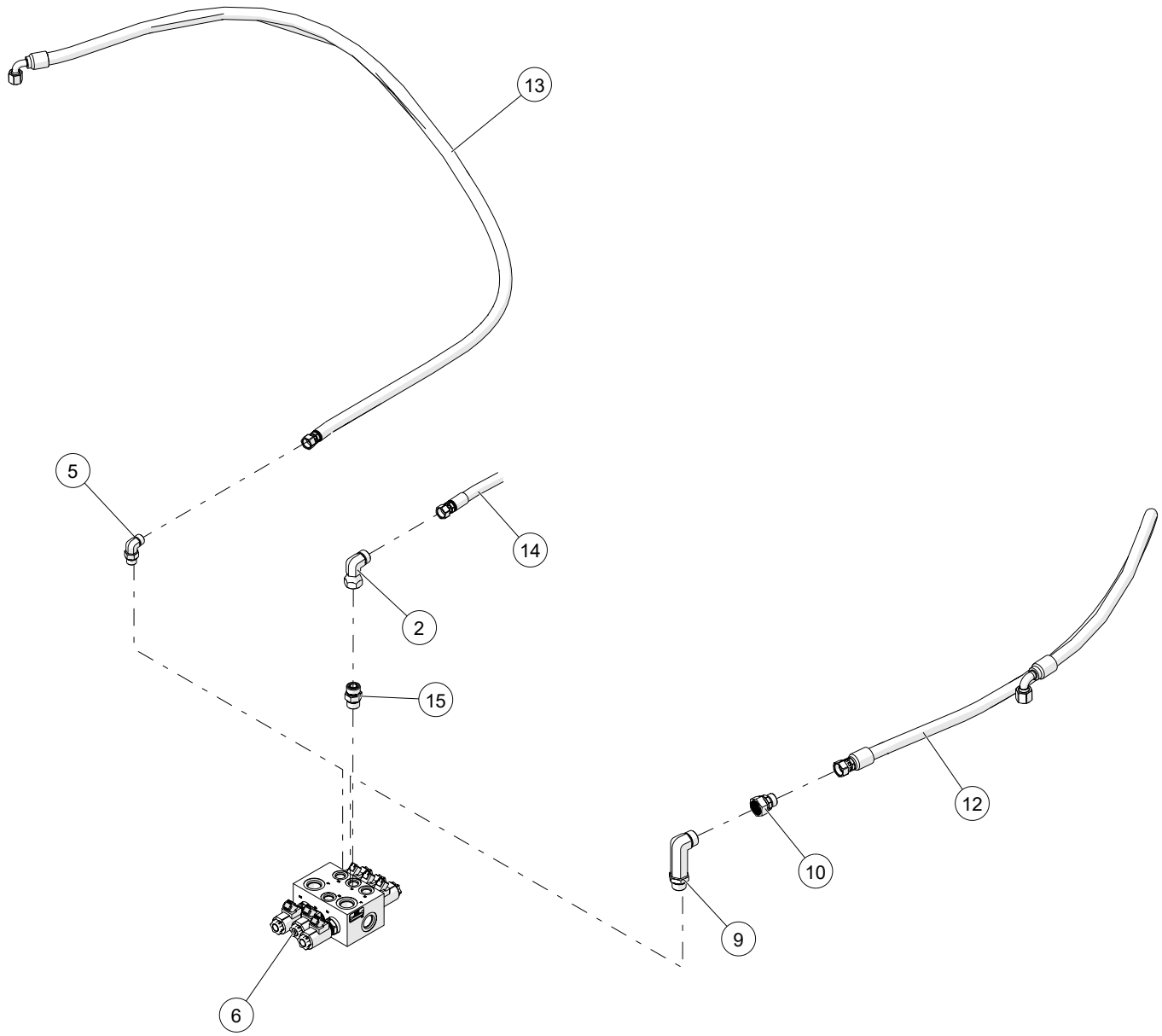

WHEN ORDERING PARTS, SPECIFY MODEL NUMBER, SERIAL NUMBER AND DESCRIPTION OF PARTS REQUIRED

ITEM	PART NUMBER	DESCRIPTION	QUANTITY	NOTES
	6-ASSEMBLY	**FOR REFERENCE ONLY**		
12	1034718	HOSE, -10, 4000, 90FOFS-10SW/FOFS-10SW, 83.5	1	
13	1027994	HOSE, -8, 4000, FOFS-8SW/90FOFS-8SW, 76.25	1	
14	1034753	HOSE, -8, 4000, FOFS-8SW/ FOFS-8SW, 77	1	
15	1010076	ADAPTER, MOFS-8/MORB-8	18	

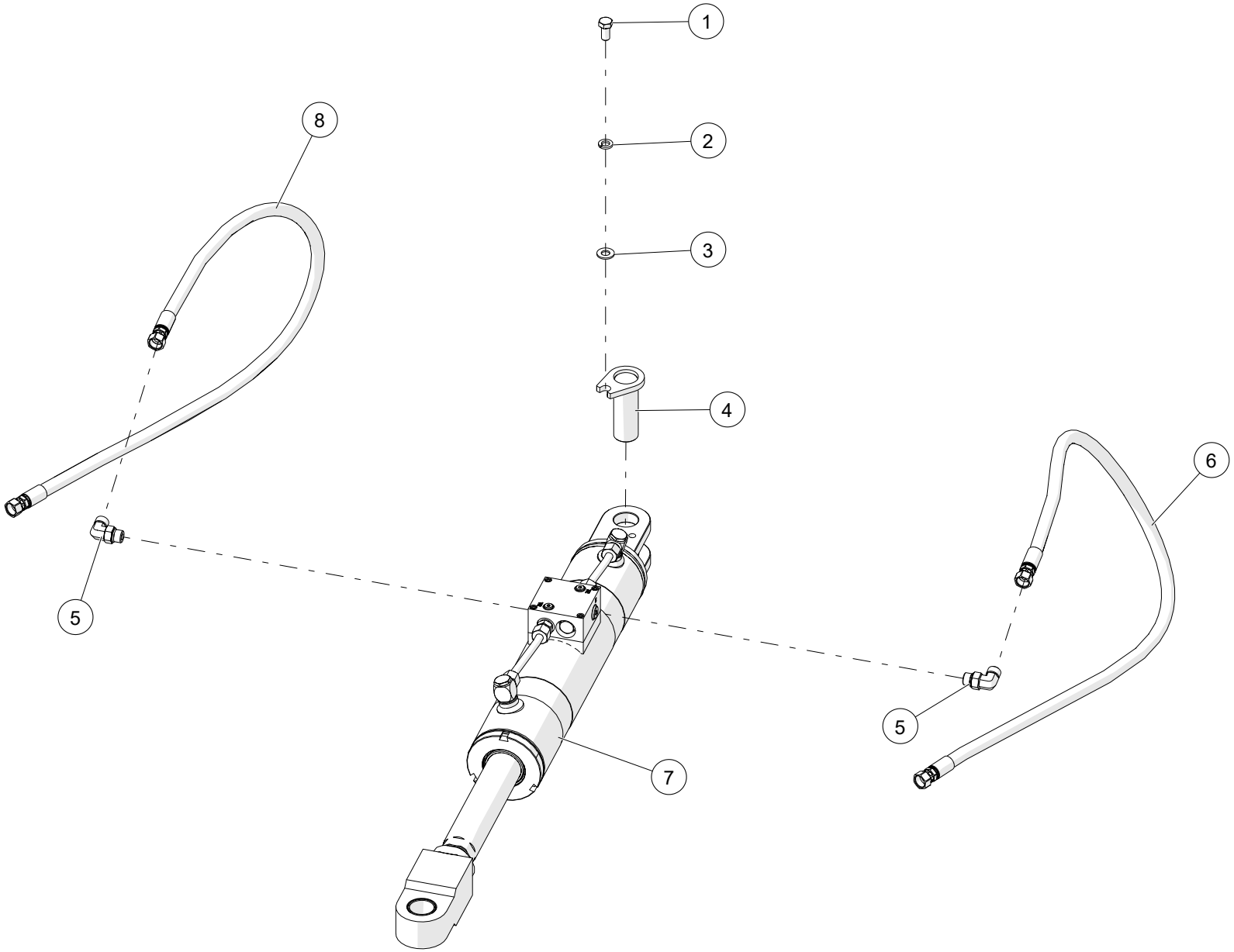

WHEN ORDERING PARTS, SPECIFY MODEL NUMBER, SERIAL NUMBER AND DESCRIPTION OF PARTS REQUIRED

ITEM	PART NUMBER	DESCRIPTION	QUANTITY	NOTES
	7-ASSEMBLY	**FOR REFERENCE ONLY**		
1	HHCS-C500A005Z0	HEX HEAD CAP SCREW, 1/2-13 X 1 LEN, GR5, ZN	8	
2	WSH4-X5000008Z0	SPIRAL LOCK WASHER, 1/2, GR8, ZN	8	
3	WSH2-X5000008Z0	SAE WASHER, 1/2, GR8, ZN	8	
4	710F0412	PIN ASS'Y, STEER CYL	8	
5	1014008	ELBOW, 90, MORB-8/MOFS-8	4	
6	1034753	HOSE, -8, 4000, FOFS-8SW/ FOFS-8SW, 77	1	
7	T163588	SWING CYLINDER	2	
8	1034755	HOSE, -8, 3000, FOFS-8SW/ FOFS-8SW, 69.5	1	

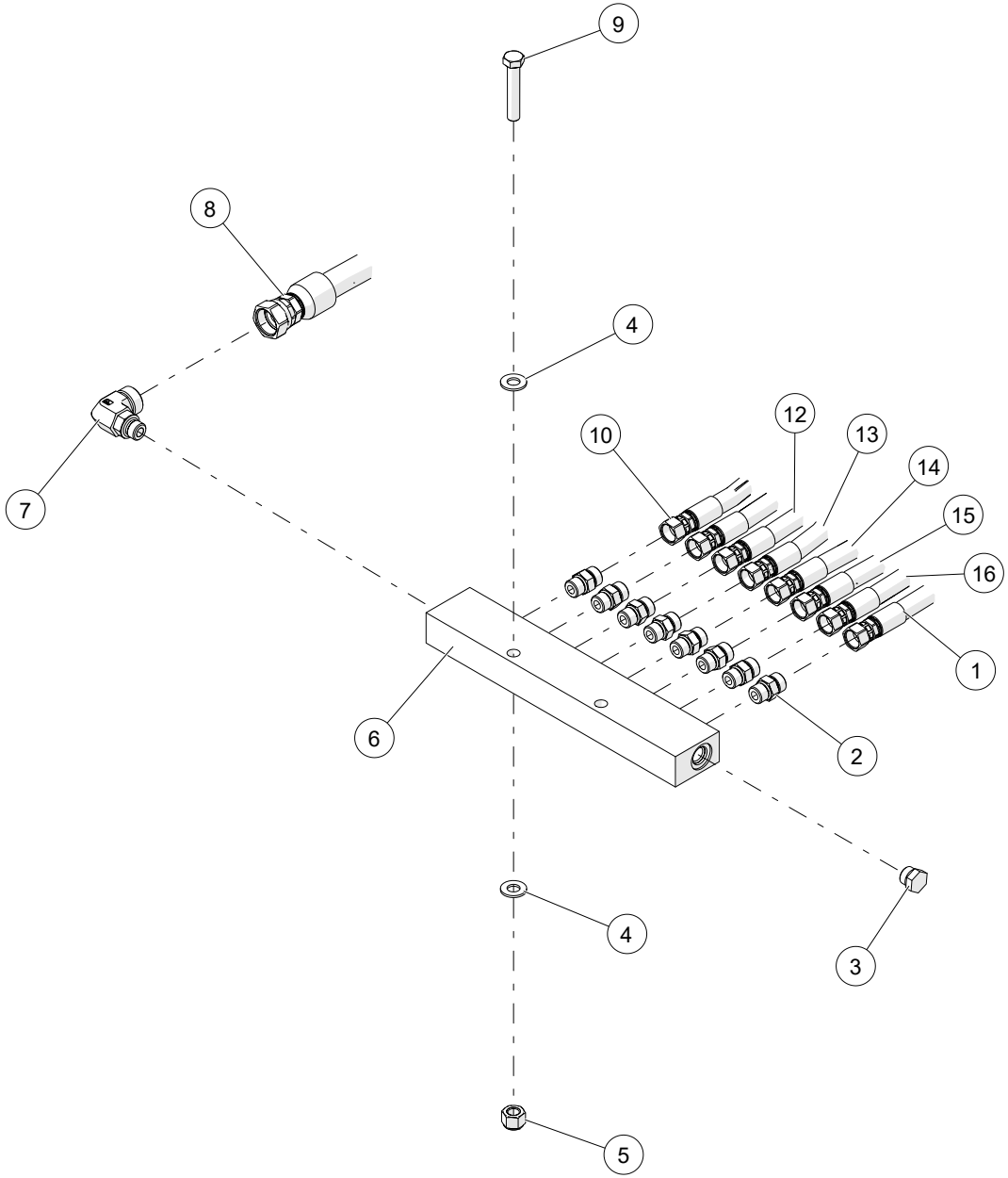

WHEN ORDERING PARTS, SPECIFY MODEL NUMBER, SERIAL NUMBER AND DESCRIPTION OF PARTS REQUIRED

ITEM	PART NUMBER	DESCRIPTION	QUANTITY	NOTES
	8-ASSEMBLY	**FOR REFERENCE ONLY**		
1	1034749	HOSE, -8, 3000, 90FOFS-8SW/FOFS-8SW, 85.5	1	
2	1010076	ADAPTER, MOFS-8/MORB-8	18	
3	1019702	PLUG, HEX, ORB-8	2	
4	WSH1-X5000008Z0	WASHER, 1/2, GR8, ZN	14	
5	NUT3-C3750005Z0	NYLON LOCK NUT, 3/8-16, GR5, ZN	14	
6	T111005	MANIFOLD, CYLINDER RETRACT	1	
7	1014016	ELBOW, 90, MOFS-12/MORB-8	2	
8	1034684	HOSE, -12, 3000, FOFS-12SW/90 FOFS-12SW, 99.5	1	
9	HHCS-C500B755Z0	HEX HEAD CAP SCREW, 1/2-13 X 2 3/4 LEN, GR5, ZN	2	
10	1034693	HOSE, -8, 3000, FOFS-8SW/FOFS-8SW, 88.25	1	
11	1034735	HOSE, -8, 3000, 90FOFS-8SW/FOFS-8SW, 95	1	
12	1034732	HOSE, -8, 3000, 90FOFS-8SW/FOFS-8SW, 84	1	
13	1034757	HOSE, -8, 3000, FOFS-8SW/ FOFS-8SW, 70.5	1	
14	1034755	HOSE, -8, 3000, FOFS-8SW/ FOFS-8SW, 69.5	1	
15	1034696	HOSE, -8, 3000, FOFS-8SW/FOFS-8SW, 90	1	
16	1034711	HOSE, -8, 3000, 90FOFS-8SW/FOFS-8SW,105.5	1	

WHEN ORDERING PARTS, SPECIFY MODEL NUMBER, SERIAL NUMBER AND DESCRIPTION OF PARTS REQUIRED

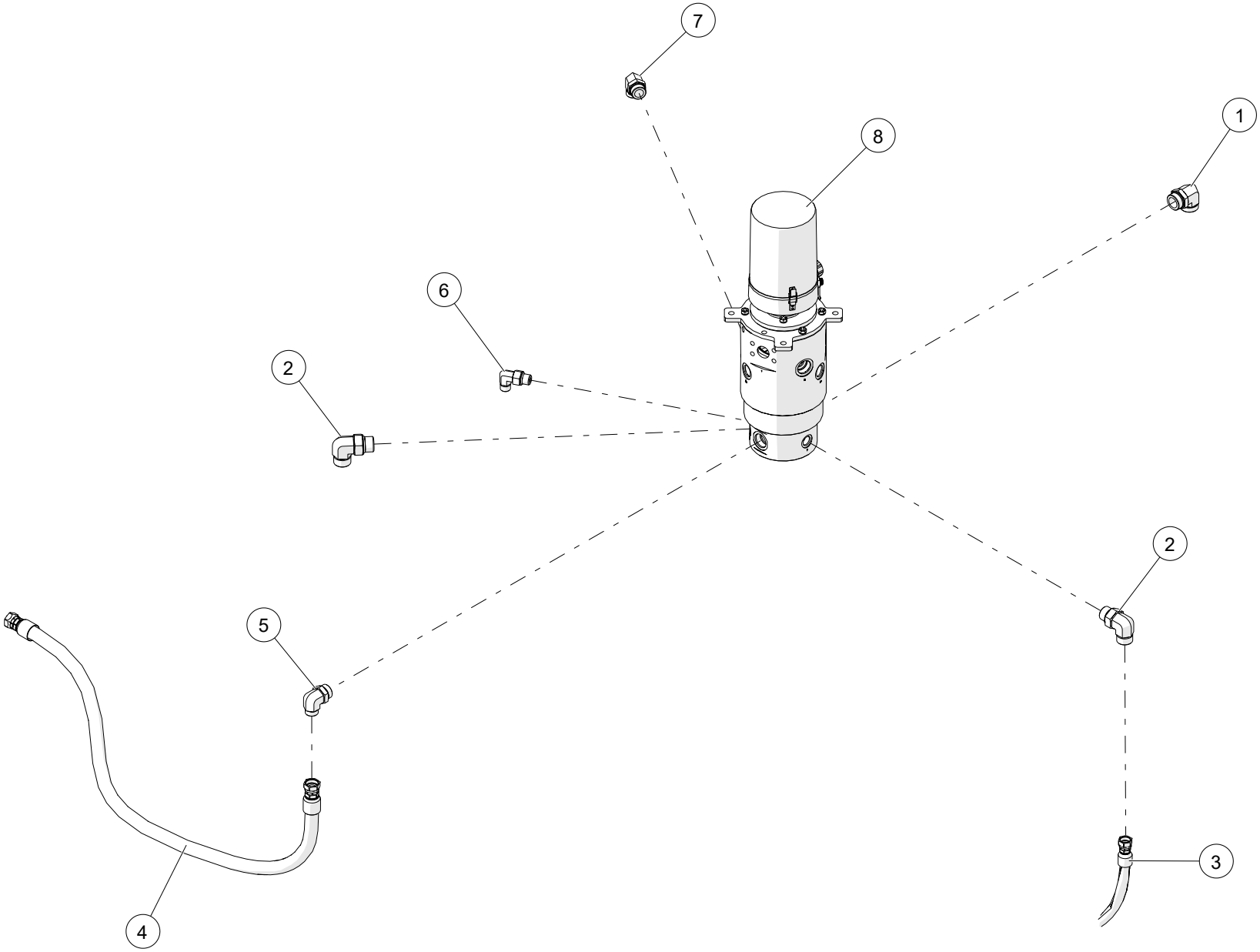

WHEN ORDERING PARTS, SPECIFY MODEL NUMBER, SERIAL NUMBER AND DESCRIPTION OF PARTS REQUIRED

ITEM	PART NUMBER	DESCRIPTION	QUANTITY	NOTES
	9-ASSEMBLY	**FOR REFERENCE ONLY**		
1	1014029	ELBOW, 90, MOFS-24/MORB-24	2	
2	1014019	ELBOW, 90, MOFS-12/MORB-12	6	
3	1034682	HOSE, -12, 4000, FOFS-12SW/FOFS-12SW, 69.5	1	
4	1034676	HOSE, -16, 250, FOFS-16SW/FOFS-16SW, 72	1	
5	1014025	ELBOW, 90, MOFS-16/MORB-20	1	
6	1013998	ELBOW, 90, MOFS-4/MORB-6	1	
7	1014064	ELBOW, 90, MOFS-20/MORB-20	1	
8	1007219	HYDRAULIC SWIVEL	1	

WHEN ORDERING PARTS, SPECIFY MODEL NUMBER, SERIAL NUMBER AND DESCRIPTION OF PARTS REQUIRED

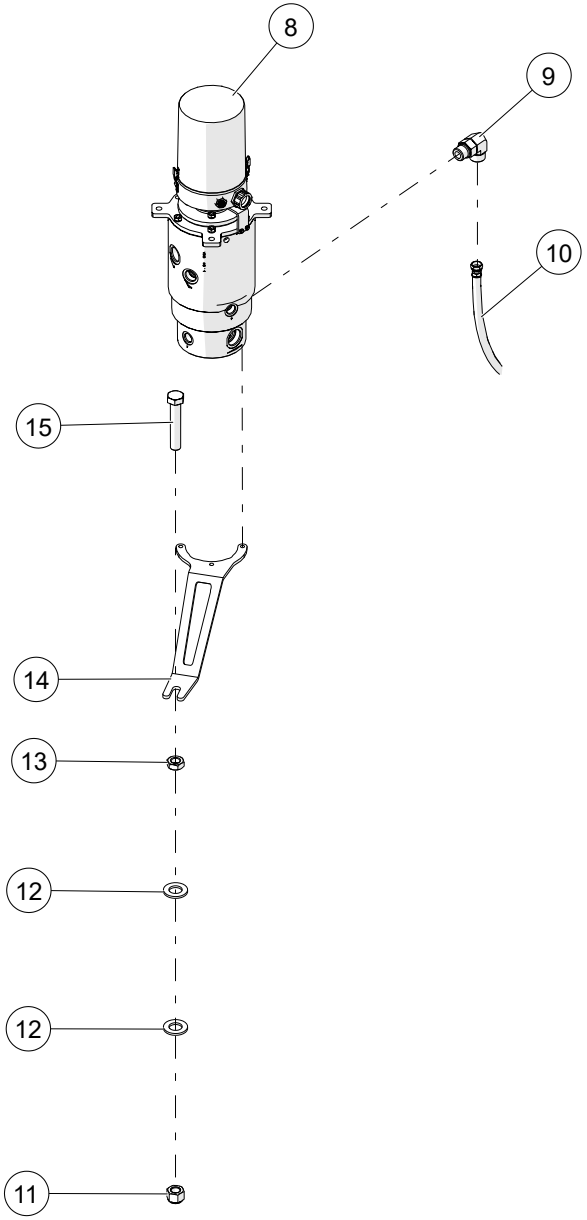

WHEN ORDERING PARTS, SPECIFY MODEL NUMBER, SERIAL NUMBER AND DESCRIPTION OF PARTS REQUIRED

ITEM	PART NUMBER	DESCRIPTION	QUANTITY	NOTES
	9-ASSEMBLY	**FOR REFERENCE ONLY**		
9	1014012	ELBOW, 90, MOFS-10/MORB-10	1	
10	1034770	HOSE, -10, 300 PSI, 90 FOFS-10SW/ FOFS-10SW, 182.75	1	
11	NUT3-C6250008M0	NYLON LOCK NUT, 5/8-11, GR8, MA	1	
12	WSH1-X7500008Z0	WASHER, 3/4, GR8, ZN	2	
13	NUT2-C6250008M0	HEX JAM NUT, 5/8-11, GR8, MA	1	
14	1041494	PLATE, SWIVEL ANTI-ROTATION	1	
15	HHCS-F625C508R1	HEX HEAD CAP SCREW, 5/8-18 X 3 1/2 LEN, GR8, NF, FULL THREAD	1	

WHEN ORDERING PARTS, SPECIFY MODEL NUMBER, SERIAL NUMBER AND DESCRIPTION OF PARTS REQUIRED

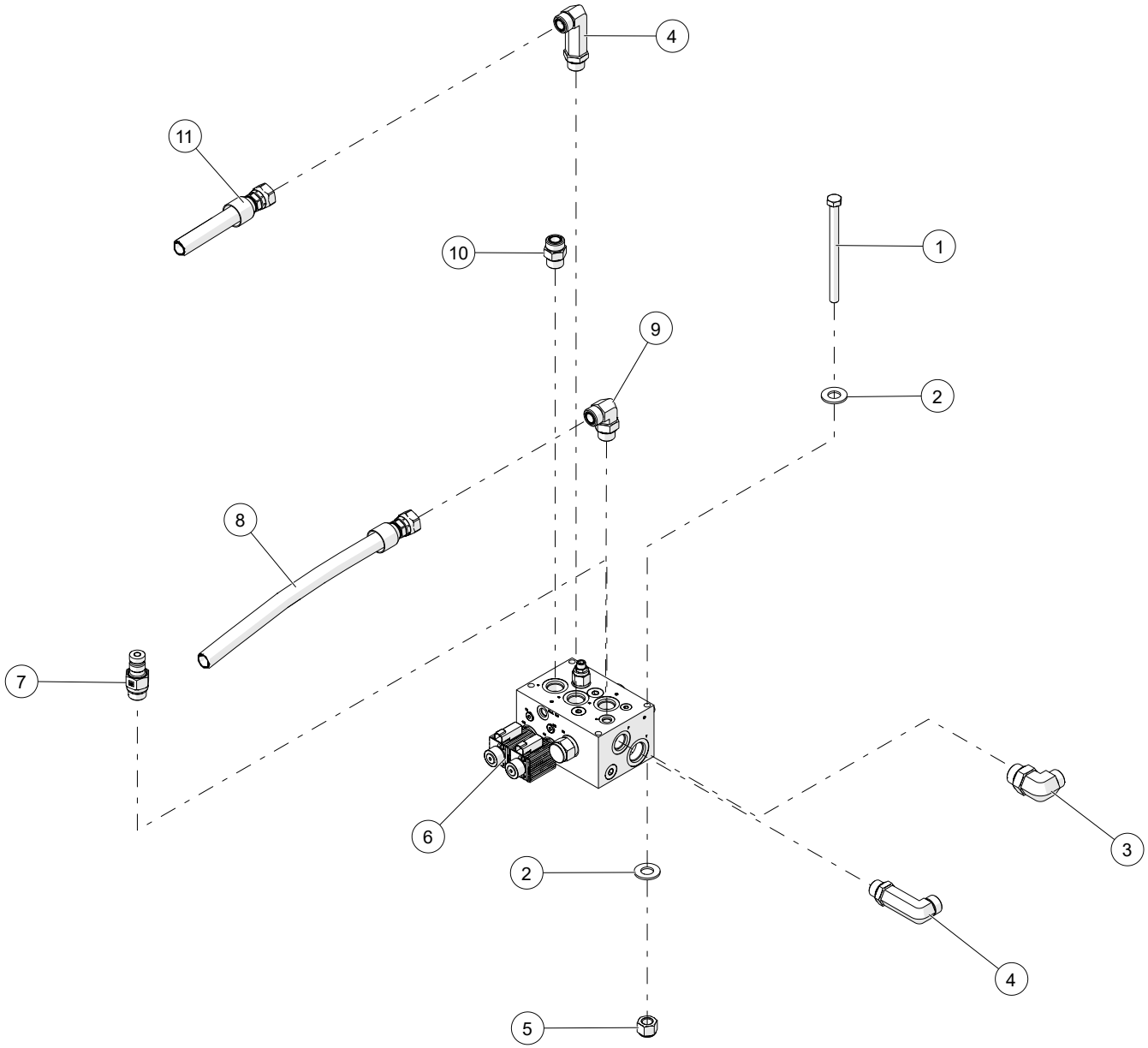

WHEN ORDERING PARTS, SPECIFY MODEL NUMBER, SERIAL NUMBER AND DESCRIPTION OF PARTS REQUIRED

ITEM	PART NUMBER	DESCRIPTION	QUANTITY	NOTES
	10-ASSEMBLY	**FOR REFERENCE ONLY**		
1	HHCS-C375E005Z0	HEX HEAD CAP SCREW, 3/8-16 X 5 LEN, GR5, ZN	4	
2	WSH1-X3750008Z0	WASHER, 3/8, GR8, ZN	32	
3	1014020	ELBOW, 90, MOFS-12/MORB-16	1	
4	1014018	ELBOW, 90, MOFS-12/MORB-12, L	6	
5	NUT3-C3750005Z0	NYLON LOCK NUT, 3/8-16, GR5, ZN	14	
6	1008283	VALVE, DIVERTER	1	
7	1020456	QUICK CONNECT, -6, M-PD/MORB	1	
8	1034682	HOSE, -12, 4000,FOFS-12SW/FOFS-12SW, 69.5	1	
9	1014019	ELBOW, 90, MOFS-12/MORB-12	6	
10	1010088	ADAPTER, MOFS-12/MORB-12	1	
11	1027995	HOSE, -12,3000, FOFS-12SW/FOFS-12SW, 65	1	

WHEN ORDERING PARTS, SPECIFY MODEL NUMBER, SERIAL NUMBER AND DESCRIPTION OF PARTS REQUIRED

NON - ILLUSTRATED PAGE

PUMP/PTO OPTION

ITEM	PART NUMBER	DESCRIPTION	QUANTITY	NOTES
	1035206	**PUMP/PTO OPTION**		
1	**1035207**	PUMP ASSEMBLY, ALLISON TRANSMISSION	1	SEE PAGE 281
2	**1035208**	PUMP ASSEMBLY, EATON TRANSMISSION	1	SEE PAGE 285

WHEN ORDERING PARTS, SPECIFY MODEL NUMBER, SERIAL NUMBER AND DESCRIPTION OF PARTS REQUIRED

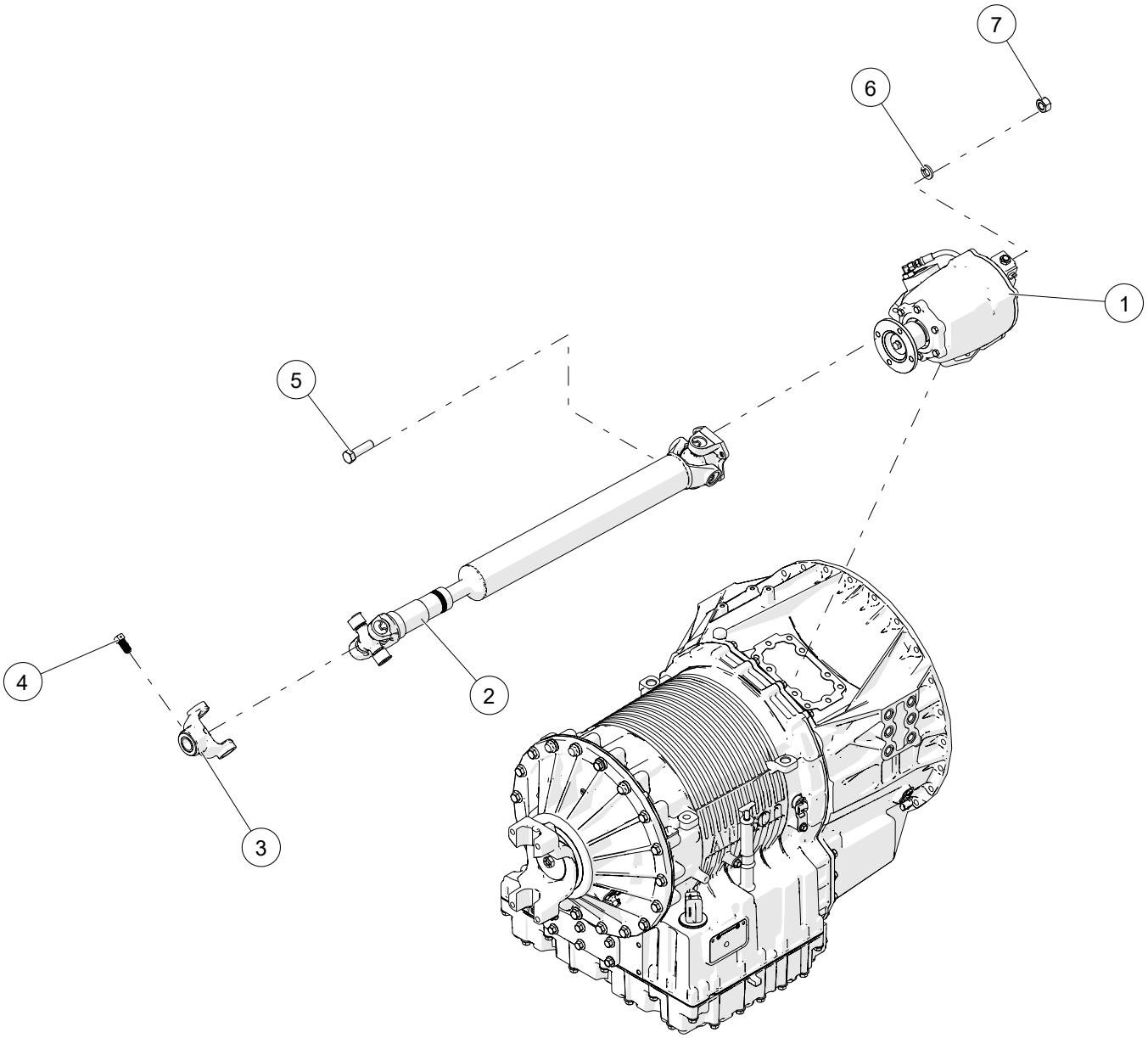

WHEN ORDERING PARTS, SPECIFY MODEL NUMBER, SERIAL NUMBER AND DESCRIPTION OF PARTS REQUIRED

PUMP ASSEMBLY, ALLISON TRANSMISSION

ITEM	PART NUMBER	DESCRIPTION	QUANTITY	NOTES
	1035207	**PUMP ASSEMBLY, ALLISON TRANSMISSION**		
1	1026508	PTO GEARBOX, ALLISON	1	
2	1009014	DRIVESHAFT ASSEMBLY, ALLISON	1	
3	1009012	END YOKE	1	
4	1026694	SET SCREW, SQUARE, 3/8"-16 THREAD, 3/4" LG	1	
5	HHCS-C438A508Z0	HEX HEAD CAP SCREW, 7/16-14 X 1 1/2 LEN, GR8, ZN	4	
6	WSH4-X4380008Z0	SPIRAL LOCK WASHER, 7/16, GR8, ZN	4	
7	NUT1-C4380008Z0	HEX NUT, 7/16-14, GR8, ZN	4	

WHEN ORDERING PARTS, SPECIFY MODEL NUMBER, SERIAL NUMBER AND DESCRIPTION OF PARTS REQUIRED

PUMP ASSEMBLY, ALLISON TRANSMISSION

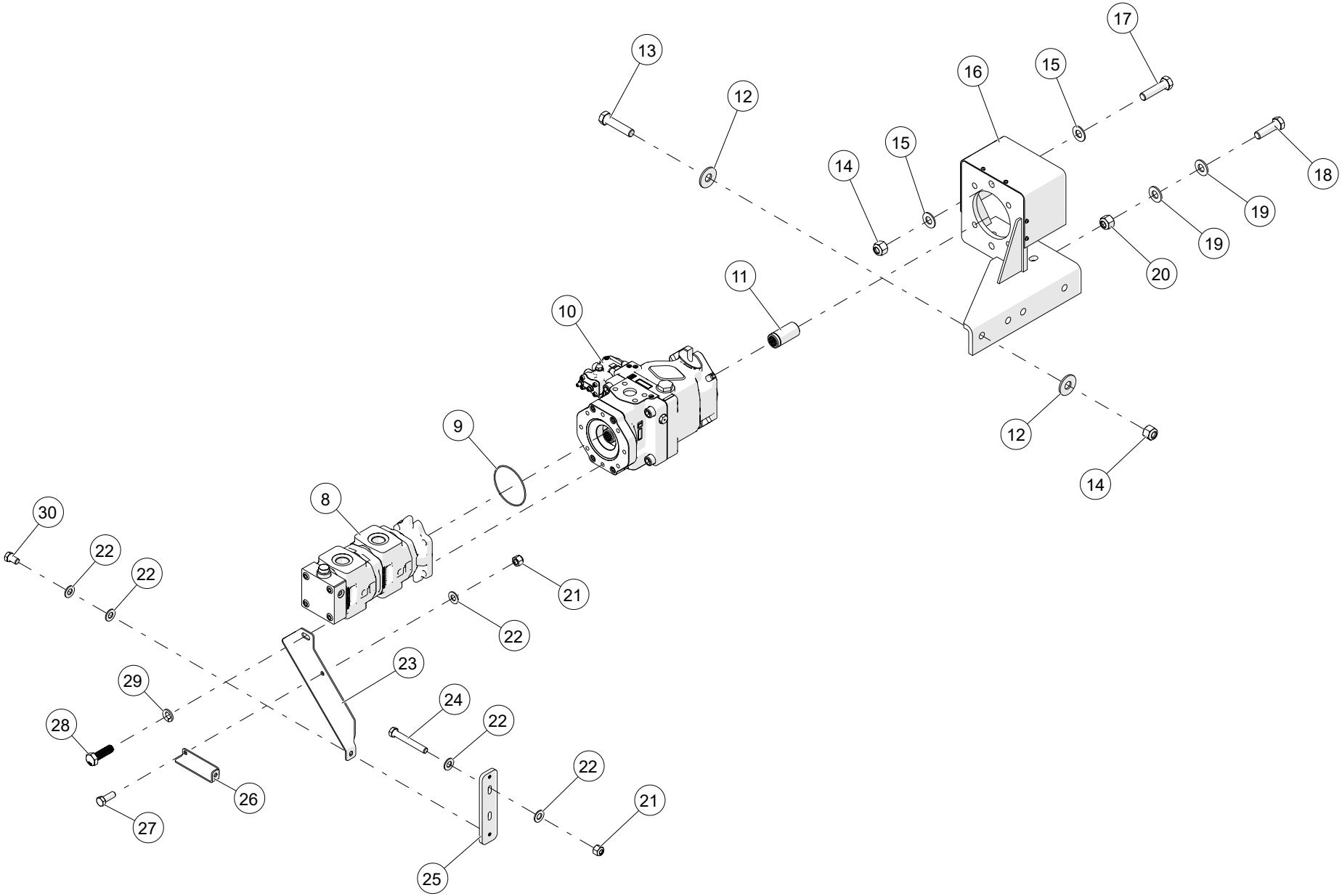

WHEN ORDERING PARTS, SPECIFY MODEL NUMBER, SERIAL NUMBER AND DESCRIPTION OF PARTS REQUIRED

PUMP ASSEMBLY, ALLISON TRANSMISSION

ITEM	PART NUMBER	DESCRIPTION	QUANTITY	NOTES
	1035207	**PUMP ASSEMBLY, ALLISON TRANSMISSION**		
8	1008267	DOUBLE PUMP CW	1	
9	1026509	O-RING, AS568A-155	1	
10	1008346	PUMP, 6.4 IN³ CW	1	
11	1008345	COUPLING, SAE BB 15T	1	
12	WSH3-X6250008Z0	FENDER WASHER, 5/8, GR8, ZN	10	
13	HHCS-C625B758M0	HEX HEAD CAP SCREW, 5/8-11 X 2 3/4 LEN, GR8, MA	5	
14	NUT3-C6250008M0	NYLON LOCK NUT, 5/8-11, GR8, MA	7	
15	WSH2-X6250008Z0	SAE WASHER, 5/8, GR8, ZN	4	
16	1037400	ASSEMBLY, PTO BRACKET W/COVER	1	
17	HHCS-C625B508M0	HEX HEAD CAP SCREW, 5/8-11 X 2 1/2 LEN, GR8, MA	2	
18	HHCS-C500A758Z0	HEX HEAD CAP SCREW, 1/2-13 X 1 3/4 LEN, GR8, ZN	1	
19	WSH1-X5000008Z0	WASHER, 1/2, GR8, ZN	2	
20	NUT3-C5000008Z0	NYLON LOCK NUT, 1/2-13, GR8, ZN	1	
21	NUT3-C3750008Z0	NYLON LOCK NUT, 3/8-16, GR8, ZN	3	
22	WSH1-X3750008Z0	WASHER, 3/8, GR8, ZN	9	
23	1037507	BRACKET, SUPPORT, PTO PUMP	1	
24	HHCS-C375B758Z0	HEX HEAD CAP SCREW, 3/8-16 X 2 3/4 LEN, GR8, ZN	2	
25	1037506	PLATE, MOUNTING, PTO PUMP SUPPORT	1	
26	1037606	BRACKET, SUPPORT, HORZ, PTO PUMP	1	
27	HHCS-C375A008Z0	HEX HEAD CAP SCREW, 3/8-16 X 1 LEN, GR8, ZN	1	
28	1026503	BOLT, M12 X 1.75MM THREAD, 40MM LG	2	
29	WSH4-X12A000PZ0	LOCK WASHER, SPIRAL, M12, ZINC	2	
30	HHCS-C3756258Z0	HEX HEAD CAP SCREW, 3/8-16 X 5/8 LEN, GR8, ZN	2	

WHEN ORDERING PARTS, SPECIFY MODEL NUMBER, SERIAL NUMBER AND DESCRIPTION OF PARTS REQUIRED

PUMP ASSEMBLY, EATON TRANSMISSION

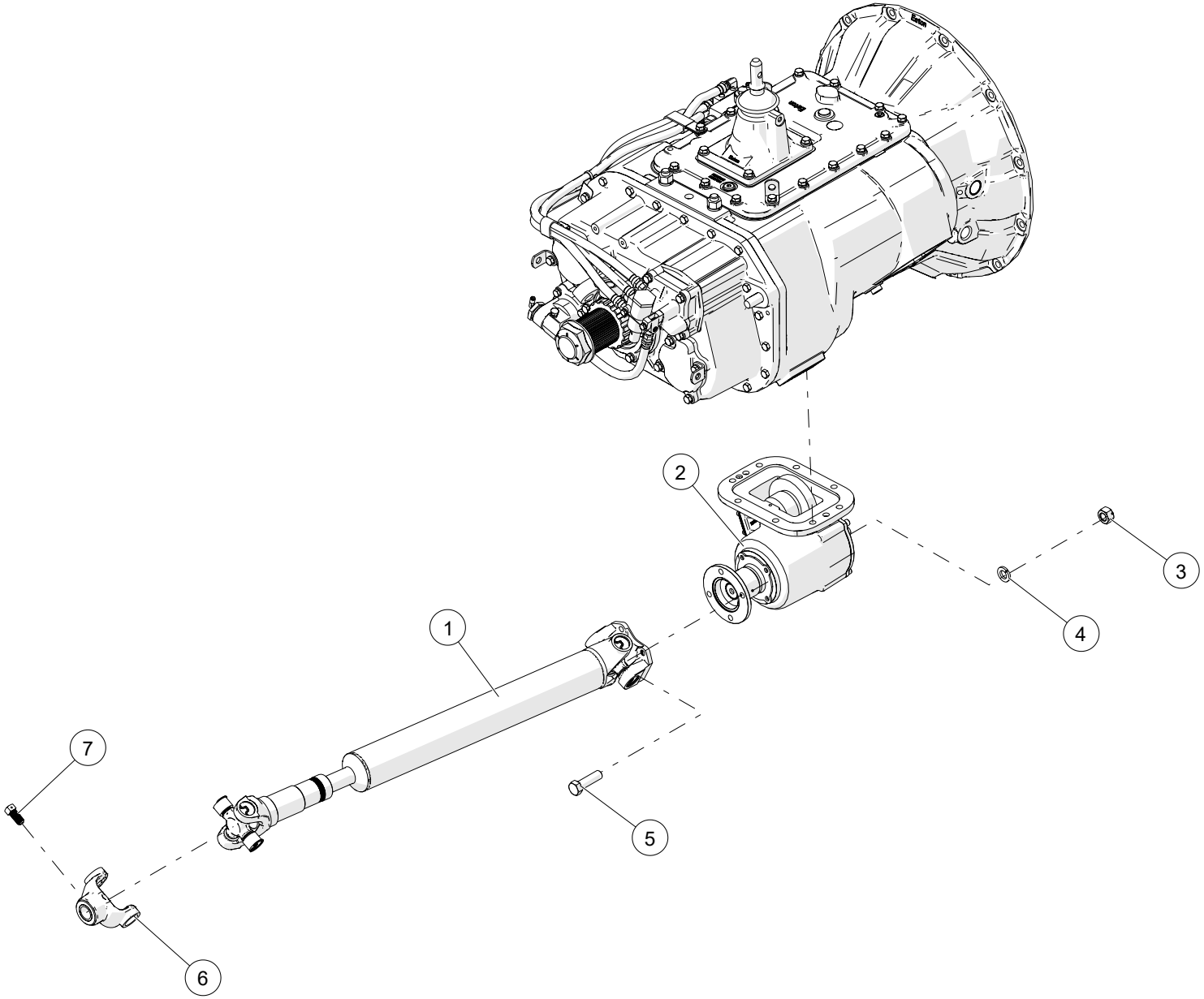

WHEN ORDERING PARTS, SPECIFY MODEL NUMBER, SERIAL NUMBER AND DESCRIPTION OF PARTS REQUIRED

PUMP ASSEMBLY, EATON TRANSMISSION

ITEM	PART NUMBER	DESCRIPTION	QUANTITY	NOTES
	1035208	**PUMP ASSEMBLY, EATON TRANSMISSION**		
1	1031017	DRIVESHAFT ASSEMBLY, ALLISON	1	
2	1026507	PTO GEARBOX, EATON	1	
3	NUT1-C4380008Z0	HEX NUT, 7/16-14, GR8, ZN	4	
4	WSH4-X4380008Z0	SPIRAL LOCK WASHER, 7/16, GR8, ZN	4	
5	HHCS-C438A508Z0	HEX HEAD CAP SCREW, 7/16-14 X 1 1/2 LEN, GR8, ZN	4	
6	1009012	END YOKE	1	
7	1026694	SET SCREW, SQUARE, 3/8"-16 THREAD, 3/4" LG	1	

WHEN ORDERING PARTS, SPECIFY MODEL NUMBER, SERIAL NUMBER AND DESCRIPTION OF PARTS REQUIRED

PUMP ASSEMBLY, EATON TRANSMISSION

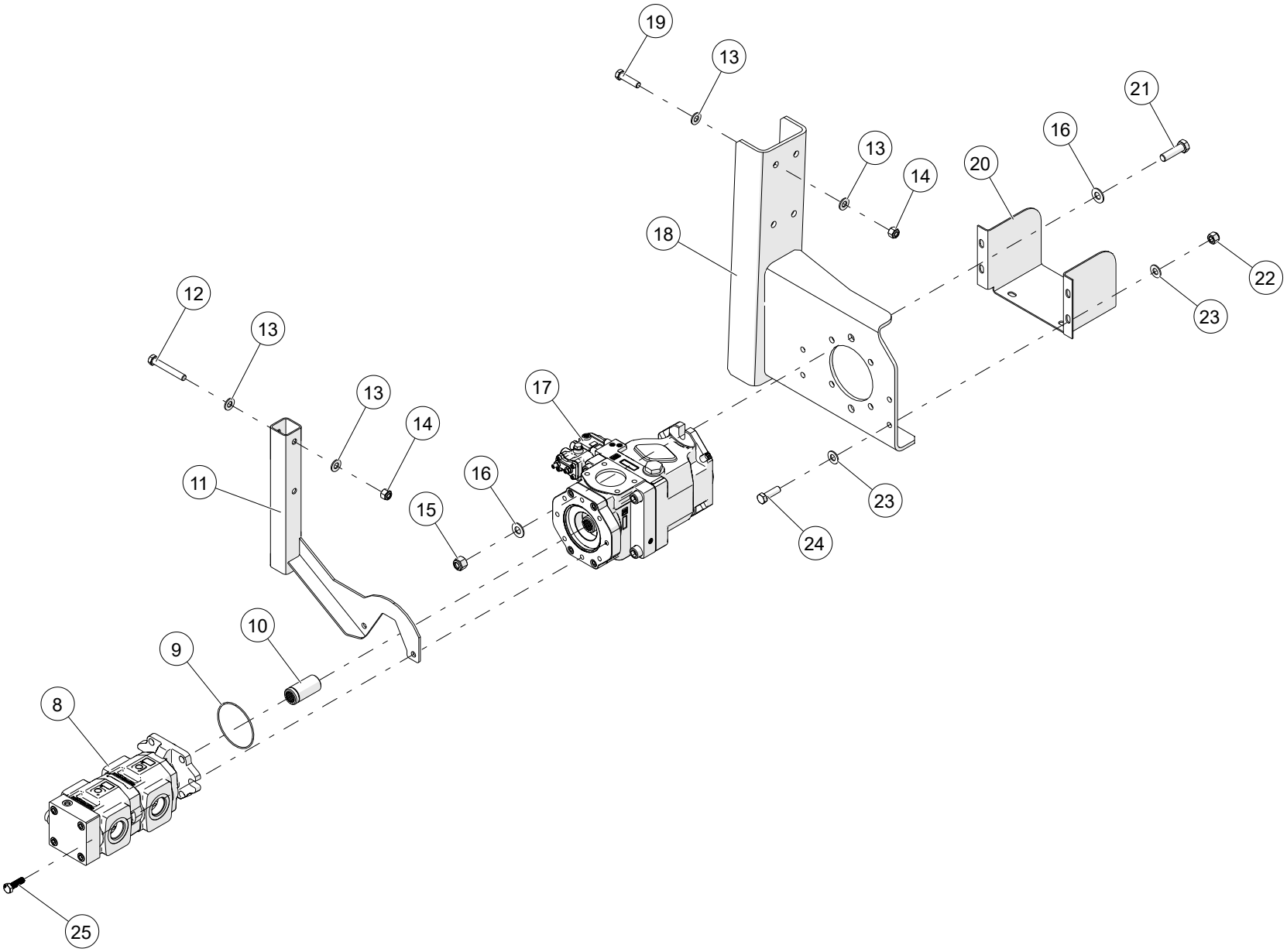

WHEN ORDERING PARTS, SPECIFY MODEL NUMBER, SERIAL NUMBER AND DESCRIPTION OF PARTS REQUIRED

PUMP ASSEMBLY, EATON TRANSMISSION

ITEM	PART NUMBER	DESCRIPTION	QUANTITY	NOTES
	1035208	**PUMP ASSEMBLY, EATON TRANSMISSION**		
8	1008270	DOUBLE PUMP CCW	1	
9	1026509	O-RING, AS568A-155	1	
10	1008345	COUPLING, SAE BB 15T	1	
11	1041420	PISTON PUMP SUPPORT BRACKET WELDMENT	1	
12	HHCS-C500C508Z0	HEX HEAD CAP SCREW, 1/2-13 X 3 1/2 LEN, GR8, ZN	2	
13	WSH1-X5000008Z0	WASHER, 1/2, GR8, ZN	13	
14	NUT3-C5000008Z0	NYLON LOCK NUT, 1/2-13, GR8, ZN	6	
15	NUT3-C6250008M0	NYLON LOCK NUT, 5/8-11, GR8, MA	2	
16	WSH1-X6250008Z0	WASHER, 5/8, GR8, ZN	4	
17	1008347	PUMP, 6.4 IN^3 CCW	1	
18	1008592	BRACKET, PUMP MOUNTING	1	
19	HHCS-C500B008Z0	HEX HEAD CAP SCREW, 1/2-13 X 2 LEN, GR8, ZN	4	
20	1027035	COVER, END YOKE	1	
21	HHCS-C625B258M0	HEX HEAD CAP SCREW, 5/8-11 X 2 1/4 LEN, GR8, MA	2	
22	NUT3-C3750008Z0	NYLON LOCK NUT, 3/8-16, GR8, ZN	6	
23	WSH1-X3750008Z0	WASHER, 3/8, GR8, ZN	12	
24	HHCS-C375A258Z0	HEX HEAD CAP SCREW, 3/8-16 X 1 1/4 LEN, GR8, ZN	6	
25	1026503	BOLT, M12 X 1.75MM THREAD, 40MM LG	2	

WHEN ORDERING PARTS, SPECIFY MODEL NUMBER, SERIAL NUMBER AND DESCRIPTION OF PARTS REQUIRED

NON - ILLUSTRATED PAGE

ITEM	PART NUMBER	DESCRIPTION	QUANTITY	NOTES
	1035218	**50-155 M & 50-155 U XO HOSE OPTIONS**		
1	**1039079**	HOSE VARIANT, 50-155 M & 50-155 U ALLISON	1	SEE PAGE 291
2	**1039173**	HOSE VARIANT, 50-155 M & 50-155 U EATON	1	SEE PAGE 295

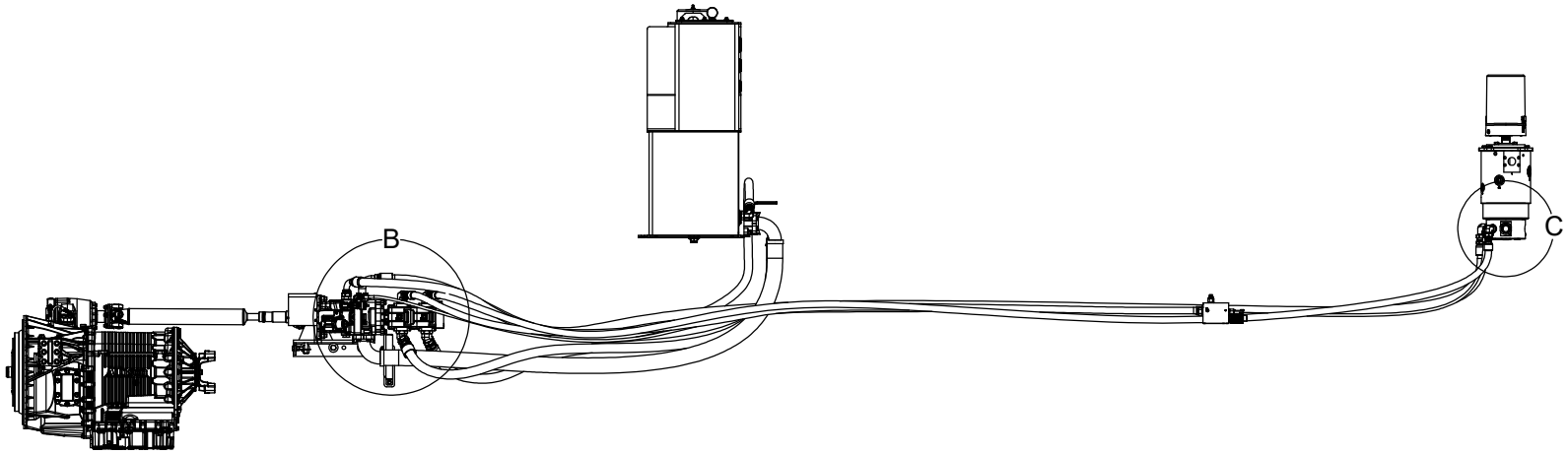

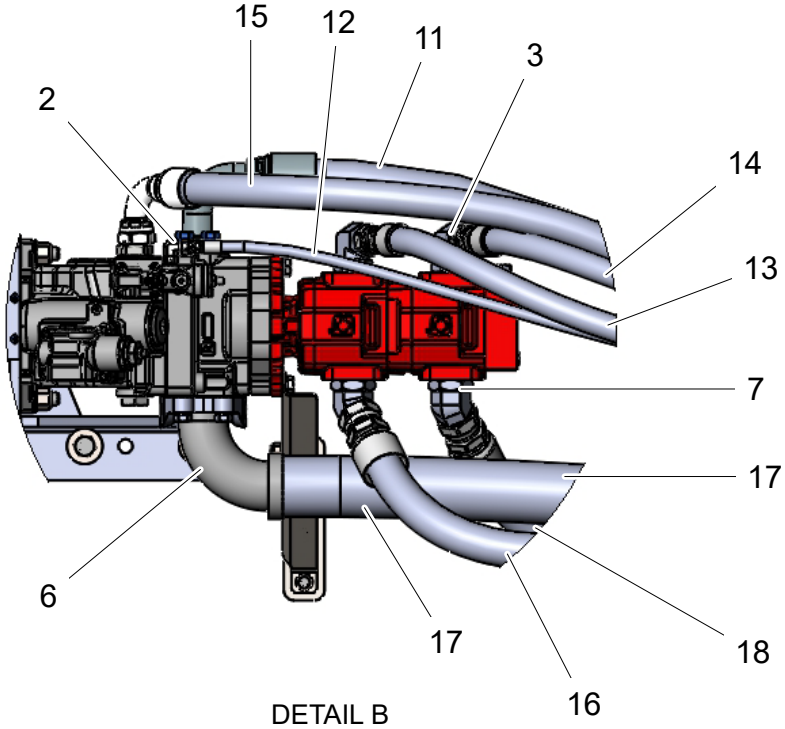

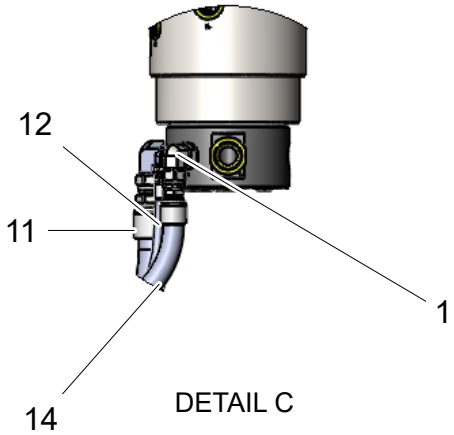

WHEN ORDERING PARTS, SPECIFY MODEL NUMBER, SERIAL NUMBER AND DESCRIPTION OF PARTS REQUIRED

HOSE VARIANT, 50-155 M & 50-155 U ALLISON

ITEM	PART NUMBER	DESCRIPTION	QUANTITY	NOTES
	1039079	**HOSE VARIANT, 50-155 M & 50-155 U ALLISON**		
1	1010092	ADAPTER, MOFS-16/MORB-12	1	
2	1013997	ELBOW, 90, MOFS-4/MORB-4	1	
3	1014020	ELBOW, 90, MOFS-12/MORB-16	2	
4	1014022	ELBOW, 90, MOFS-16/MORB-12	1	
5	1014641	ELBOW, 90, HBRB-20/C61-24	2	
6	1014642	ELBOW, 90, HBRB-40/C61-40	1	
7	1016207	ELBOW, 45, MOFS-20/MORB-20	2	
8	1020223	CLAMP, C62-20, KIT	1	
9	1020225	CLAMP, C61-24, KIT	2	
10	1020228	CLAMP, C61-40, KIT	2	
11	1027976	HOSE, -20, 4000, FOFS-20SW/90C62-20, 236.0	1	
12	1027977	HOSE, -4, 4000, FOFS-4SW/FOFS-4SW, 235.5	1	
13	1027978	HOSE, -12, 4000, FOFS-12SW/FOFS-12SW, 171.0	1	
14	1027979	HOSE, -12, 4000, FOFS-12SW/FOFS-12SW, 226.25	1	
15	1031795	HOSE, -16, 300, FOFS-16SW/90FOFS-16SW,111.0	1	
16	1040976	HOSE, -20, 300, FOFS-20SW/NO END,102.5	1	
17	1040978	HOSE, -40, Low, 90OFS-40FLNG / NO END, 112	1	
18	1040979	HOSE, -20, 300, FOFS-20SW/NO END, 101.0	1	

WHEN ORDERING PARTS, SPECIFY MODEL NUMBER, SERIAL NUMBER AND DESCRIPTION OF PARTS REQUIRED

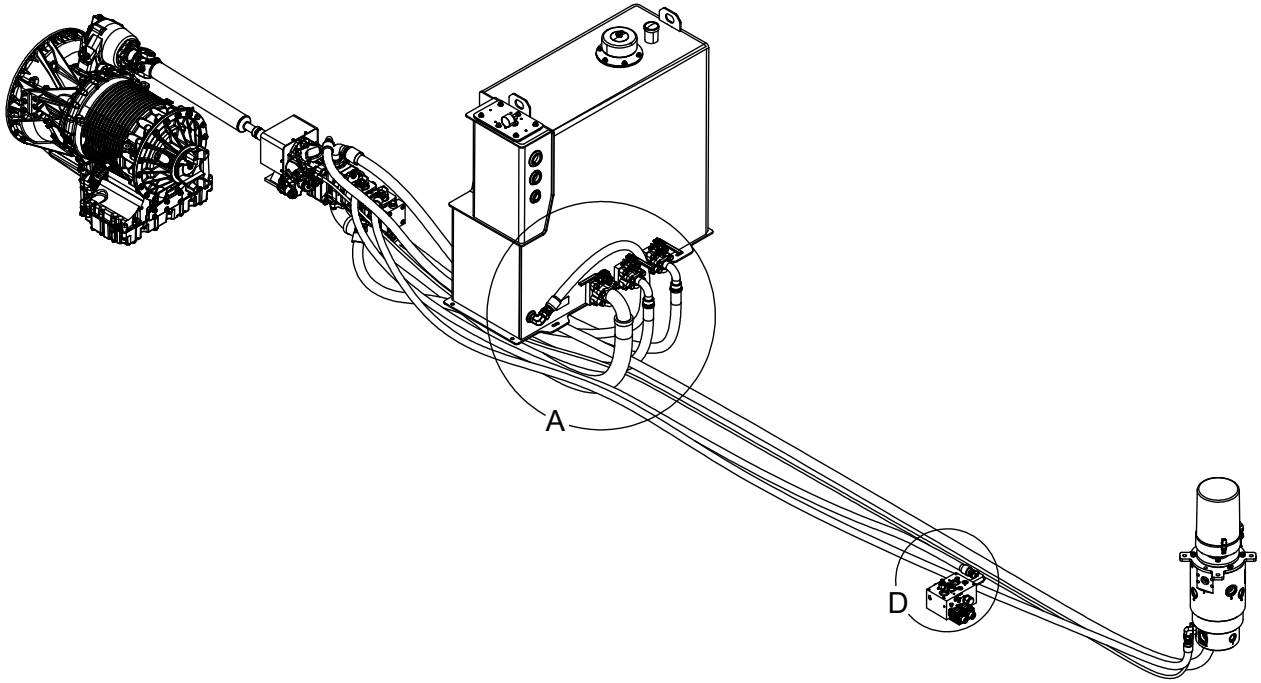

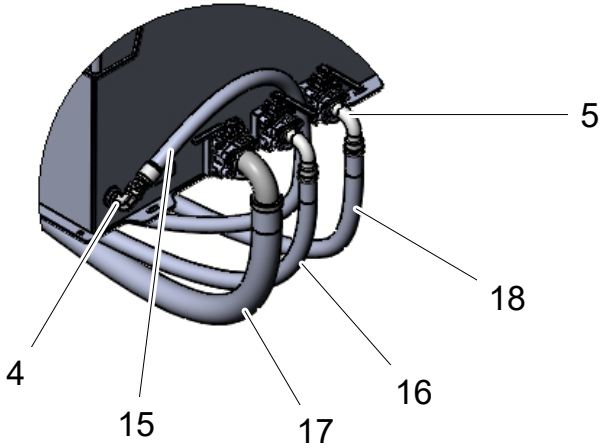

DETAIL A

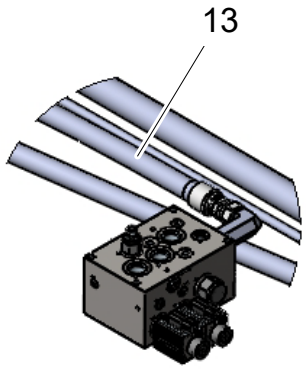

DETAIL D

WHEN ORDERING PARTS, SPECIFY MODEL NUMBER, SERIAL NUMBER AND DESCRIPTION OF PARTS REQUIRED

HOSE VARIANT, 50-155 M & 50-155 U ALLISON

ITEM	PART NUMBER	DESCRIPTION	QUANTITY	NOTES
	1039079	**HOSE VARIANT, 50-155 M & 50-155 U ALLISON**		
1	1010092	ADAPTER, MOFS-16/MORB-12	1	
2	1013997	ELBOW, 90, MOFS-4/MORB-4	1	
3	1014020	ELBOW, 90, MOFS-12/MORB-16	2	
4	1014022	ELBOW, 90, MOFS-16/MORB-12	1	
5	1014641	ELBOW, 90, HBRB-20/C61-24	2	
6	1014642	ELBOW, 90, HBRB-40/C61-40	1	
7	1016207	ELBOW, 45, MOFS-20/MORB-20	2	
8	1020223	CLAMP, C62-20, KIT	1	
9	1020225	CLAMP, C61-24, KIT	2	
10	1020228	CLAMP, C61-40, KIT	2	
11	1027976	HOSE, -20, 4000, FOFS-20SW/90C62-20, 236.0	1	
12	1027977	HOSE, -4, 4000, FOFS-4SW/FOFS-4SW, 235.5	1	
13	1027978	HOSE, -12, 4000, FOFS-12SW/FOFS-12SW, 171.0	1	
14	1027979	HOSE, -12, 4000, FOFS-12SW/FOFS-12SW, 226.25	1	
15	1031795	HOSE, -16, 300, FOFS-16SW/90FOFS-16SW,111.0	1	
16	1040976	HOSE, -20, 300, FOFS-20SW/NO END,102.5	1	
17	1040978	HOSE, -40, Low, 90OFS-40FLNG / NO END, 112	1	
18	1040979	HOSE, -20, 300, FOFS-20SW/NO END, 101.0	1	

WHEN ORDERING PARTS, SPECIFY MODEL NUMBER, SERIAL NUMBER AND DESCRIPTION OF PARTS REQUIRED

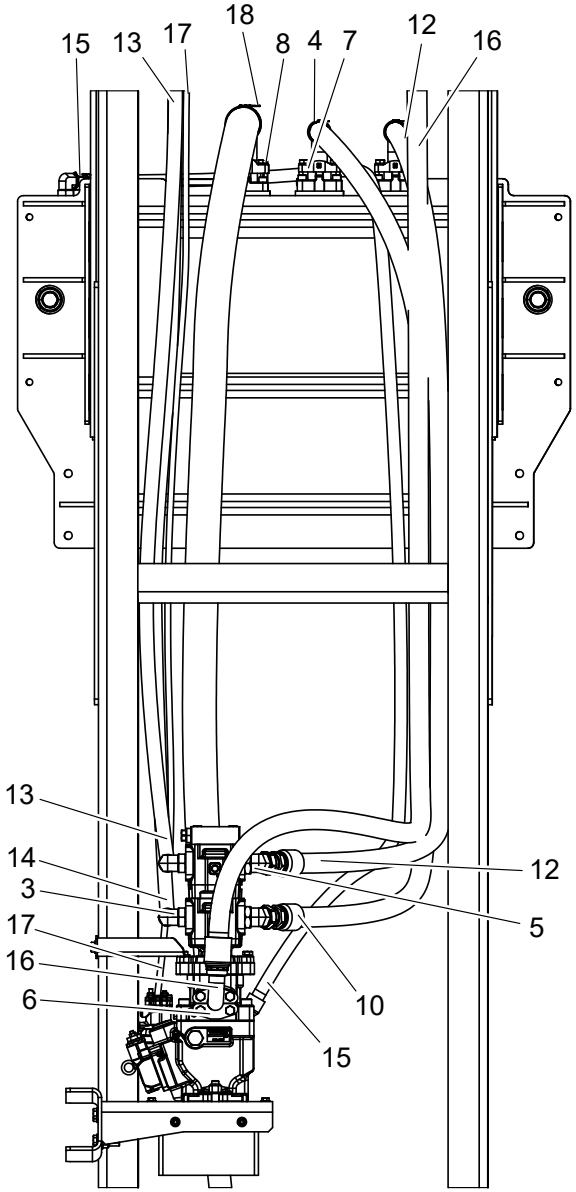

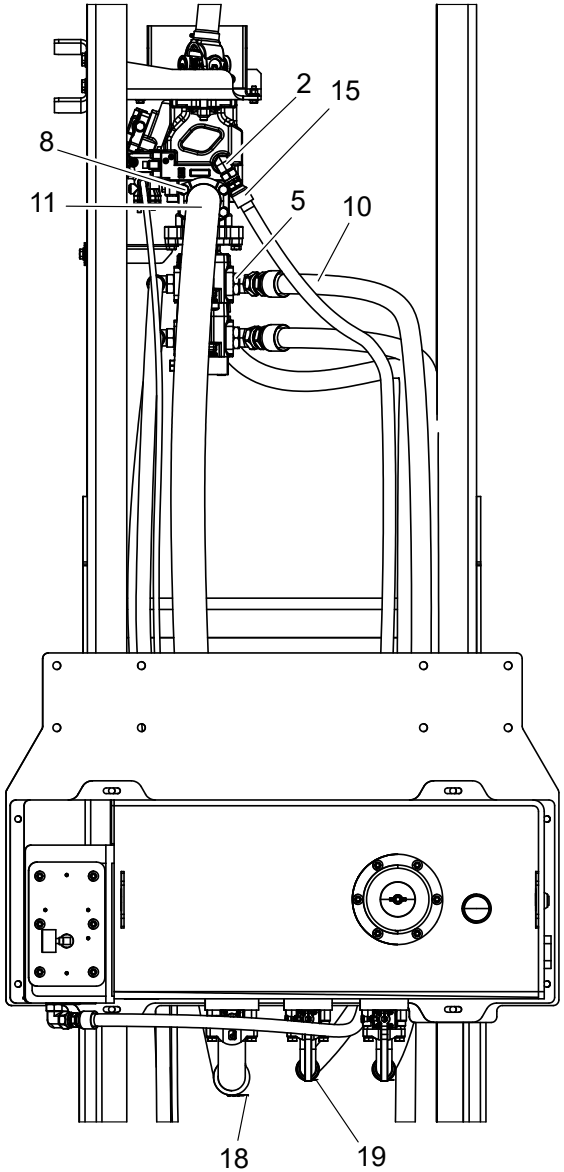

WHEN ORDERING PARTS, SPECIFY MODEL NUMBER, SERIAL NUMBER AND DESCRIPTION OF PARTS REQUIRED

HOSE VARIANT, 50-155 M & 50-155 U EATON

ITEM	PART NUMBER	DESCRIPTION	QUANTITY	NOTES
	1039173	**HOSE VARIANT, 50-155 M & 50-155 U EATON**		
1	1010066	ADAPTER, MOFS-4/MORB-4	1	
2	1014019	ELBOW, 90, MOFS-12/MORB-12	2	
3	1014020	ELBOW, 90, MOFS-12/MORB-16	2	
4	1014641	ELBOW, 90, HBRB-20/C61-24	2	
5	1016207	ELBOW, 45, MOFS-20/MORB-20	2	
6	1020223	CLAMP, C62-20, KIT	1	
7	1020225	CLAMP, C61-24, KIT	2	
8	1020228	CLAMP, C61-40, KIT	2	
9	1040975	HOSE END, C61-40	1	
10	1040976	HOSE, -20, 300, FOFS-20SW/NO END, 102.5	1	
11	1040978	HOSE, -40, 62, 90C61-40/NO END,112.0	1	
12	1040979	HOSE, -20, 300, FOFS-20SW/NO END, 101.0	1	
13	1040980	HOSE, -12, 4000, FOFS-12SW/FOFS-12SW, 250	1	
14	1040981	HOSE, -12, 4000, FOFS-12SW/FOFS-12SW, 172.0	1	
15	1040982	HOSE, -12, 300, FOFS-12SW/FOFS-12SW, 131.5	1	
16	1040983	HOSE, -20, 4000, FOFS-20SW/90C62-20, 252.0	1	
17	1040984	HOSE, -4, 4000, FOFS-4SW/FOFS-4SW, 284.0	1	
18	1040996	2.88"-3.19" T-BOLT CLAMP	2	
19	1040997	1.63"-1.88" T-BOLT CLAMP	2	

WHEN ORDERING PARTS, SPECIFY MODEL NUMBER, SERIAL NUMBER AND DESCRIPTION OF PARTS REQUIRED

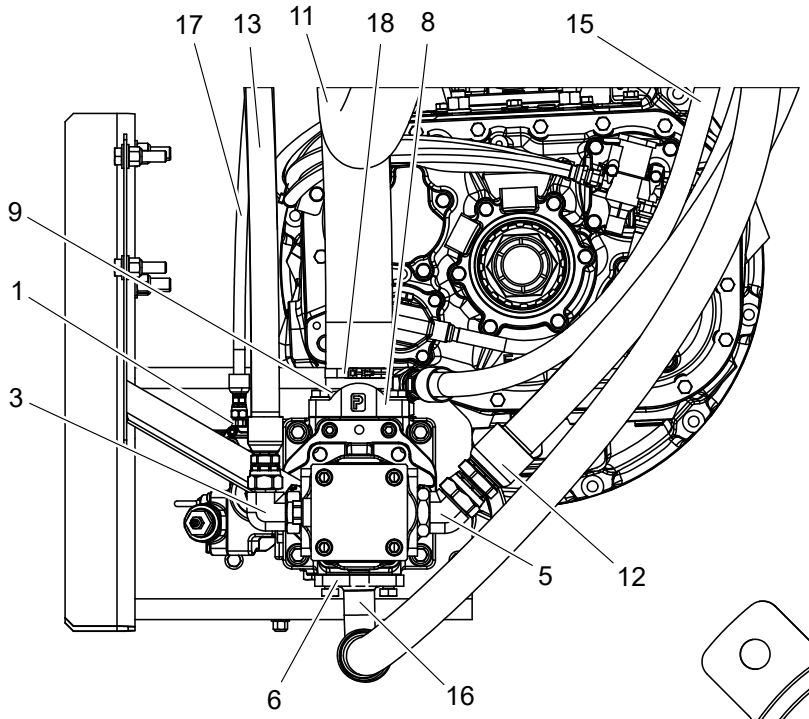

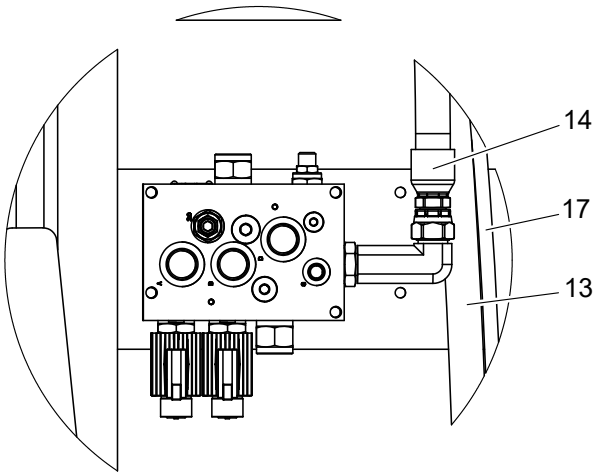

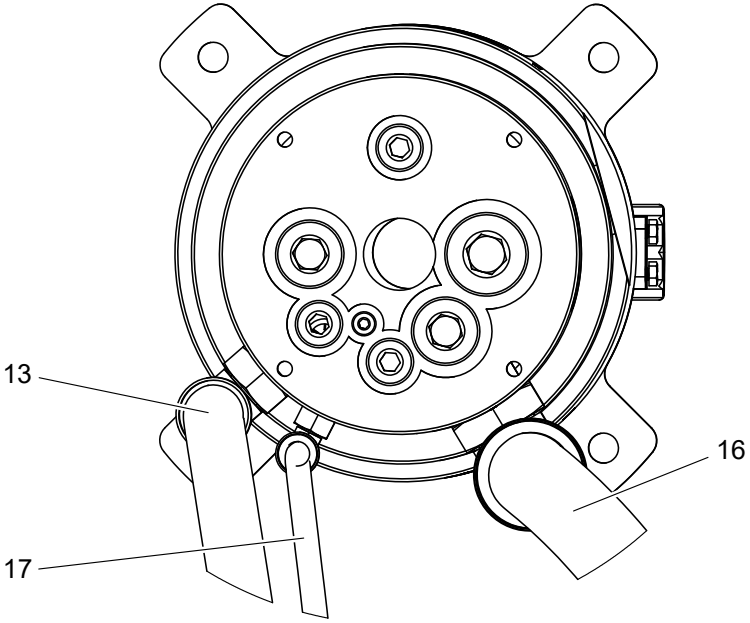

WHEN ORDERING PARTS, SPECIFY MODEL NUMBER, SERIAL NUMBER AND DESCRIPTION OF PARTS REQUIRED

HOSE VARIANT, 50-155 M & 50-155 U EATON

ITEM	PART NUMBER	DESCRIPTION	QUANTITY	NOTES
	1039173	**HOSE VARIANT, 50-155 M & 50-155 U EATON**		
1	1010066	ADAPTER, MOFS-4/MORB-4	1	
2	1014019	ELBOW, 90, MOFS-12/MORB-12	2	
3	1014020	ELBOW, 90, MOFS-12/MORB-16	2	
4	1014641	ELBOW, 90, HBRB-20/C61-24	2	
5	1016207	ELBOW, 45, MOFS-20/MORB-20	2	
6	1020223	CLAMP, C62-20, KIT	1	
7	1020225	CLAMP, C61-24, KIT	2	
8	1020228	CLAMP, C61-40, KIT	2	
9	1040975	HOSE END, C61-40	1	
10	1040976	HOSE, -20, 300, FOFS-20SW/NO END, 102.5	1	
11	1040978	HOSE, -40, 62, 90C61-40/NO END,112.0	1	
12	1040979	HOSE, -20, 300, FOFS-20SW/NO END, 101.0	1	
13	1040980	HOSE, -12, 4000, FOFS-12SW/FOFS-12SW, 250	1	
14	1040981	HOSE, -12, 4000, FOFS-12SW/FOFS-12SW, 172.0	1	
15	1040982	HOSE, -12, 300, FOFS-12SW/FOFS-12SW, 131.5	1	
16	1040983	HOSE, -20, 4000, FOFS-20SW/90C62-20, 252.0	1	
17	1040984	HOSE, -4, 4000, FOFS-4SW/FOFS-4SW, 284.0	1	
18	1040996	2.88"-3.19" T-BOLT CLAMP	2	
19	1040997	1.63"-1.88" T-BOLT CLAMP	2	

WHEN ORDERING PARTS, SPECIFY MODEL NUMBER, SERIAL NUMBER AND DESCRIPTION OF PARTS REQUIRED

SWING BEARING INSTALLATION

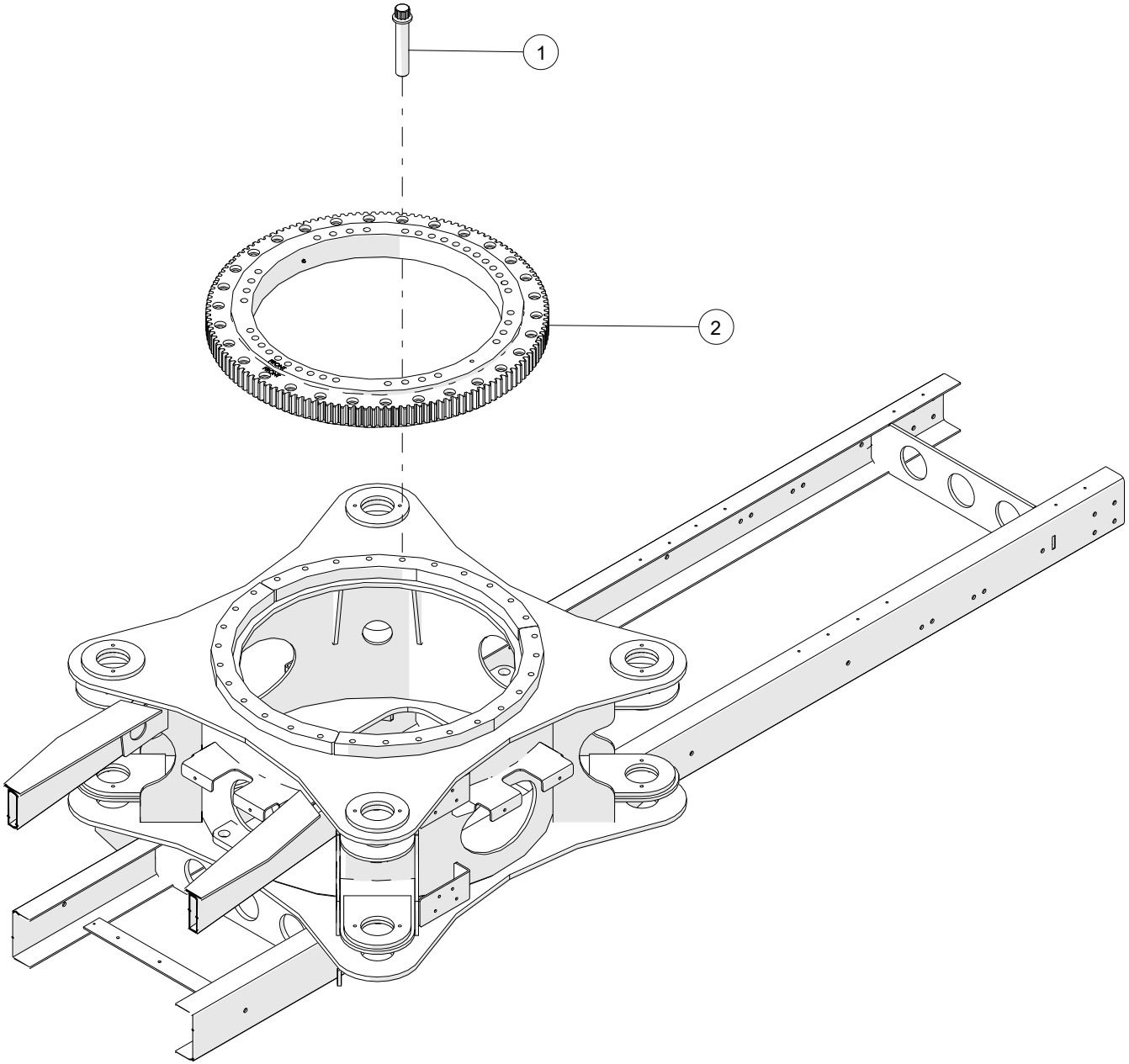

WHEN ORDERING PARTS, SPECIFY MODEL NUMBER, SERIAL NUMBER AND DESCRIPTION OF PARTS REQUIRED

SWING BEARING INSTALLATION

ITEM	PART NUMBER	DESCRIPTION	QUANTITY	NOTES
	T124827	**SWING BEARING INSTALLATION**		
1	**T146525**	KIT, SWING BEARING INSTL	1	SEE PAGE 301
2	T151786	SWING BEARING	1	

WHEN ORDERING PARTS, SPECIFY MODEL NUMBER, SERIAL NUMBER AND DESCRIPTION OF PARTS REQUIRED

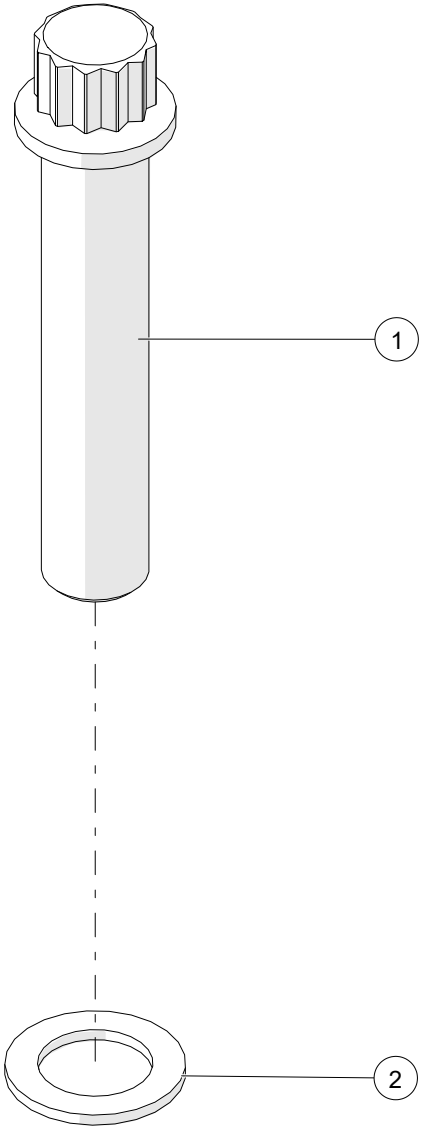

WHEN ORDERING PARTS, SPECIFY MODEL NUMBER, SERIAL NUMBER AND DESCRIPTION OF PARTS REQUIRED

KIT, SWING BEARING INSTL

ITEM	PART NUMBER	DESCRIPTION	QUANTITY	NOTES
	T146525	**KIT, SWING BEARING INSTL**		
1	FHCS-C875D509R0	FERRY HEAD CAP SCREW, 7/8-9 X 4 1/2 LEN, NF	30	
2	WBN-87NXA47-20	WSH, FL TYPB-NRW 0.875, ST SQC	30	

WHEN ORDERING PARTS, SPECIFY MODEL NUMBER, SERIAL NUMBER AND DESCRIPTION OF PARTS REQUIRED

CHAPTER NO. 3

OPTIONAL EQUIPMENT

PAGE INTENTIONALLY LEFT BLANK

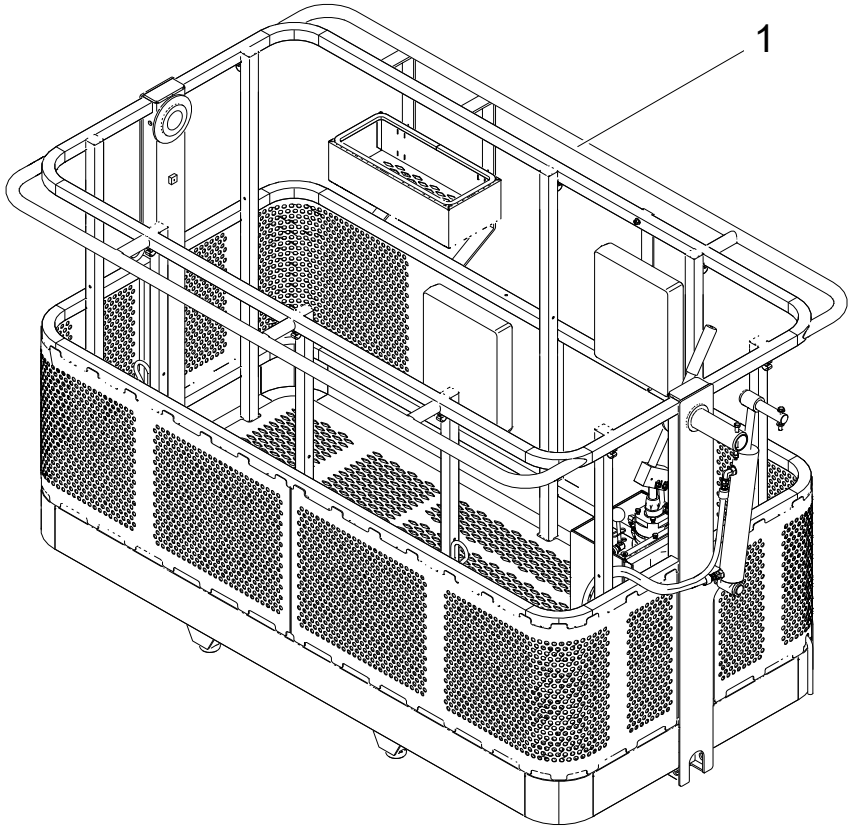

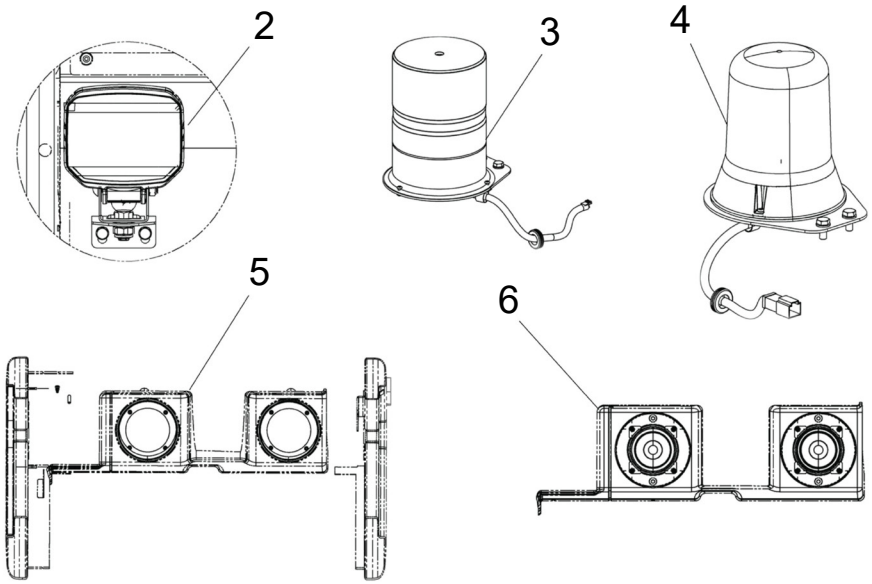

WHEN ORDERING PARTS, SPECIFY MODEL NUMBER, SERIAL NUMBER AND DESCRIPTION OF PARTS REQUIRED

ITEM	PART NUMBER	DESCRIPTION	QUANTITY	NOTES
	50-155 M & 50-155 U -OPT-EQUIP	**OPTIONAL EQUIPMENT**		
1	**1039867**	50-155 M & 50-155 U - MAN BASKET OPTIONS	1	SEE PAGE 307
2	**1035133**	WORK LIGHT INSTALLATION	1	SEE PAGE 321
3	**T124067**	STROBE LIGHT INSTALLATION	1	SEE PAGE 325
4	**T134670**	REVOLVING AMBER LIGHT INSTALLATION	1	SEE PAGE 327
5	**T127309**	NO RADIO OPTION	1	SEE PAGE 329
6	**1027226**	RADIO OPTION	1	SEE PAGE 331
7*	**1035204****	50-155 M & 50-155 U AUX WINCH OPTION	1	SEE PAGE 333
8*	**1008824****	COLD WEATHER OPTIONS	1	SEE PAGE 339
9*	**1035213****	XO WIRELESS CONTROL OPTIONS	1	SEE PAGE 345

NOTE: *NOT SHOWN IN THE ILLUSTRATION
**NOT SERVICEABLE AT THIS LEVEL

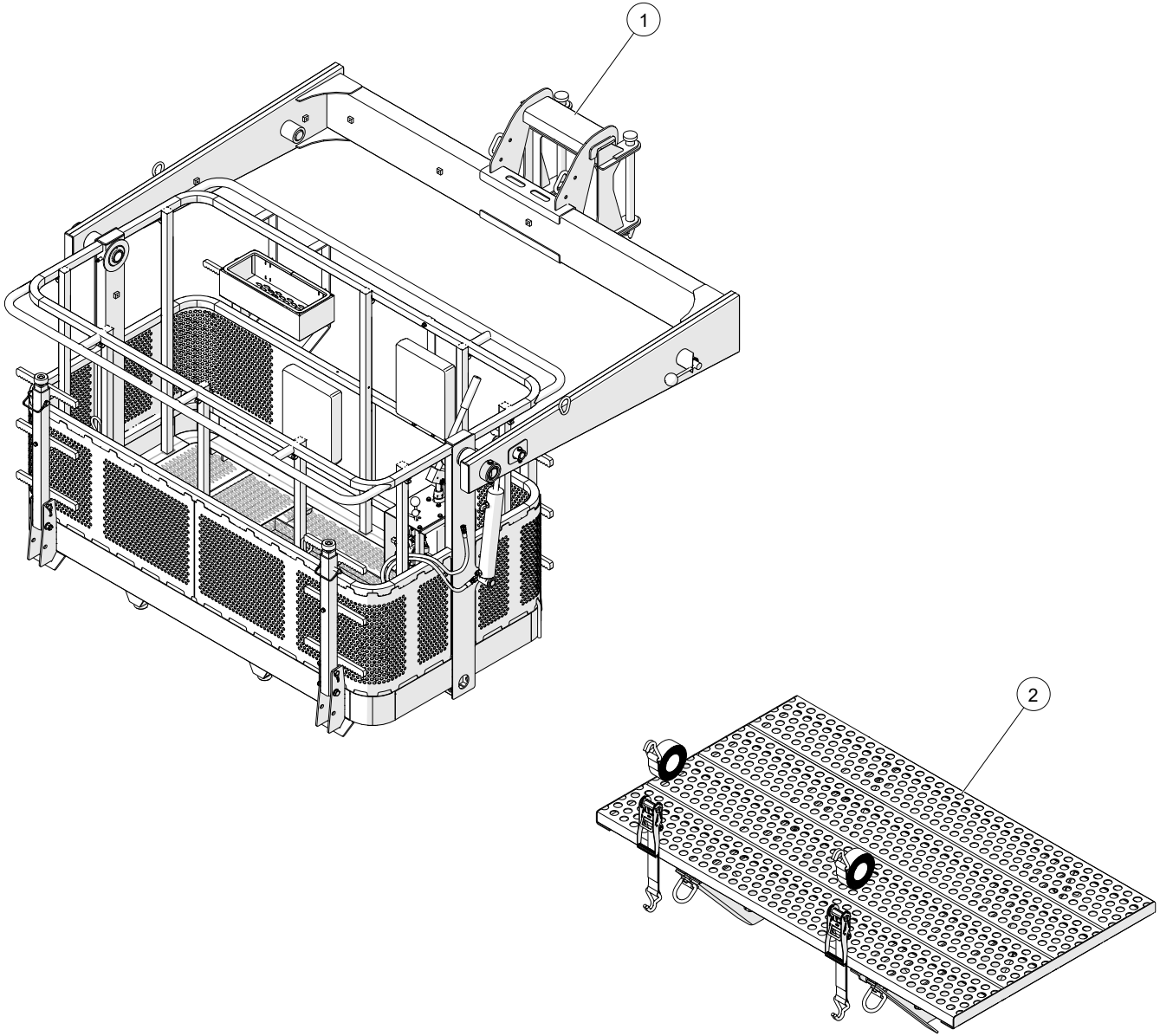

WHEN ORDERING PARTS, SPECIFY MODEL NUMBER, SERIAL NUMBER AND DESCRIPTION OF PARTS REQUIRED

ITEM	PART NUMBER	DESCRIPTION	QUANTITY	NOTES
	1039867	**50-155 M & 50-155 U - MAN BASKET OPTIONS**		
1	**1025703**	2-MAN PLATFORM INSTALLATION	1	SEE PAGE 309
2	**1038767**	50-155 M & 50-155 U BASKET STOWAGE INSTALLATION	1	SEE PAGE 319

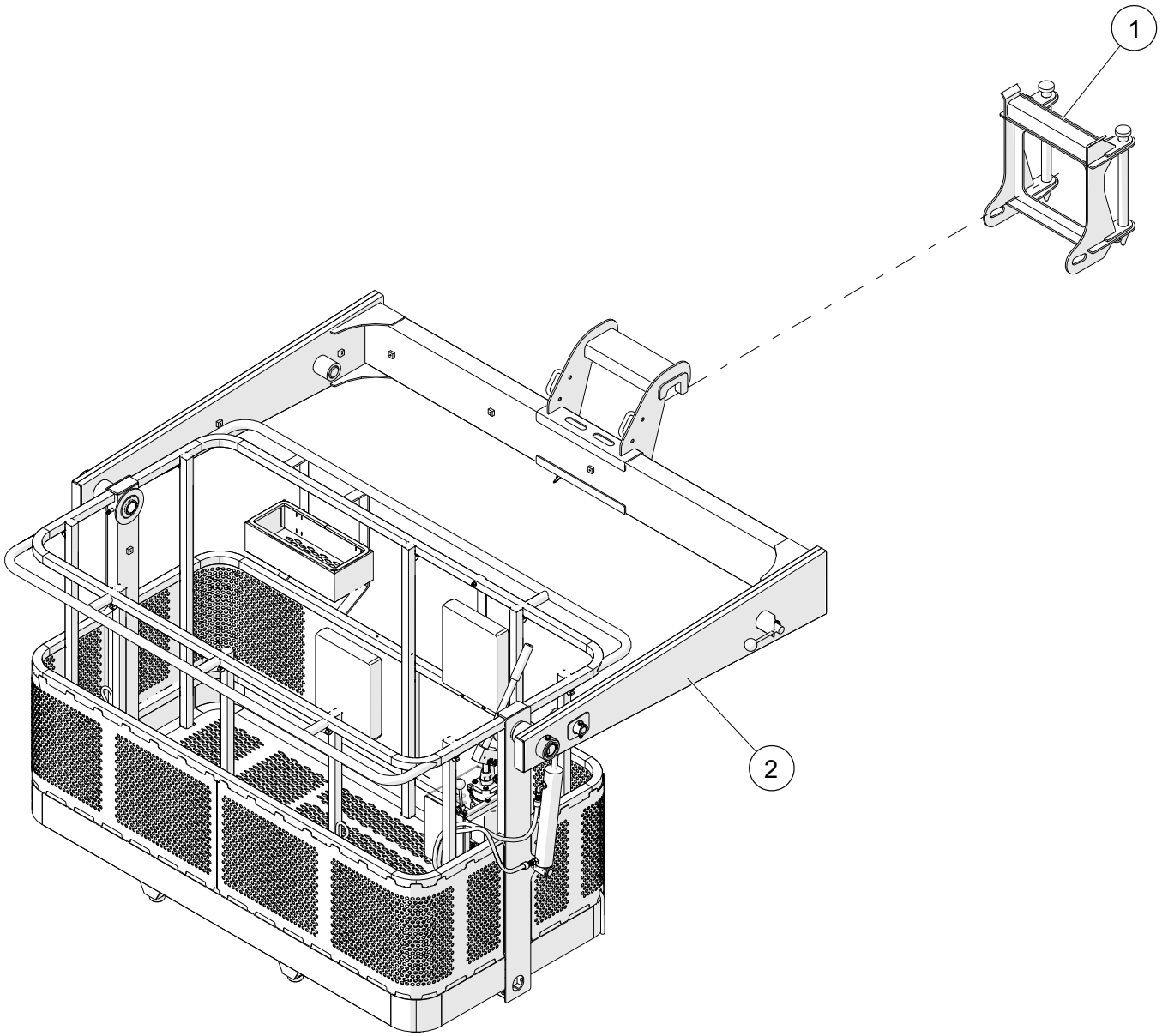

WHEN ORDERING PARTS, SPECIFY MODEL NUMBER, SERIAL NUMBER AND DESCRIPTION OF PARTS REQUIRED

ITEM	PART NUMBER	DESCRIPTION	QUANTITY	NOTES
	1025703	**2-MAN PLATFORM INSTALLATION**		
1	**1035656**	MAN BASKET BRACKET ASSEMBLY	1	SEE PAGE 311
2	**1037484**	LONG STRAIGHT MAN BASKET	1	SEE PAGE 313

MAN BASKET BRACKET ASSEMBLY

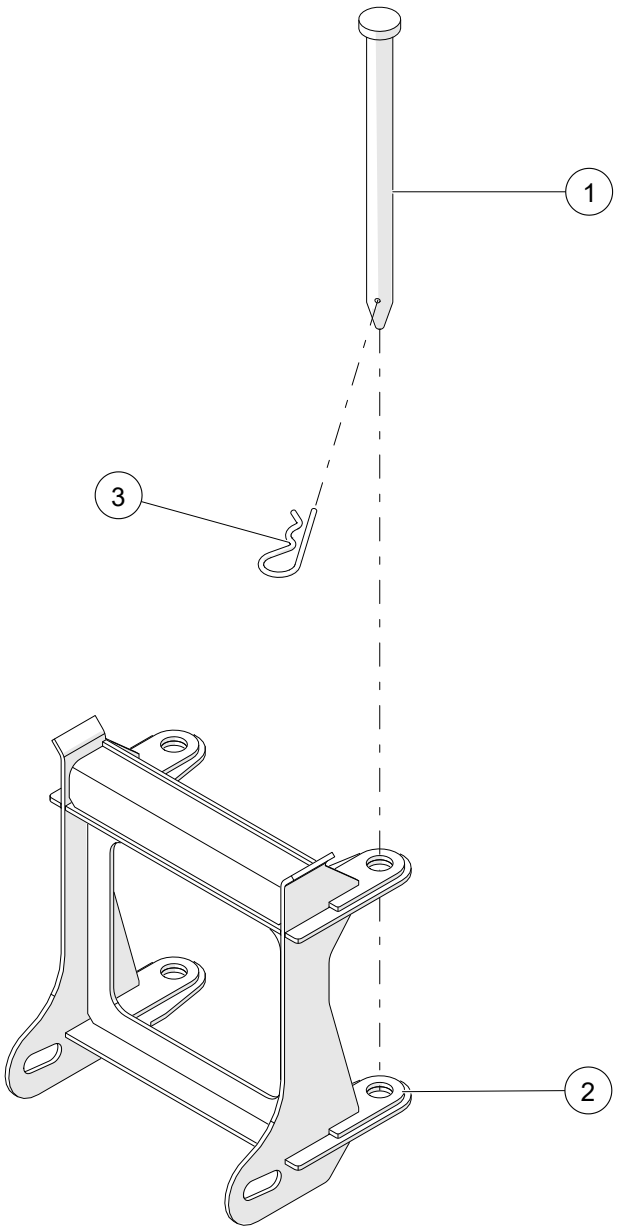

WHEN ORDERING PARTS, SPECIFY MODEL NUMBER, SERIAL NUMBER AND DESCRIPTION OF PARTS REQUIRED

MAN BASKET BRACKET ASSEMBLY

ITEM	PART NUMBER	DESCRIPTION	QUANTITY	NOTES
	1035656	**MAN BASKET BRACKET ASSEMBLY**		
1	1035157	PIN, MAN BASKET BRACKET ATTACHMENT	2	
2	1031510	WELDMENT MANBASKET BRACKET	1	
3	PIN2-X250D00YZ0	HAIR PIN, 11/64 DIA X 3 3/4 LEN, ZINC	2	

WHEN ORDERING PARTS, SPECIFY MODEL NUMBER, SERIAL NUMBER AND DESCRIPTION OF PARTS REQUIRED

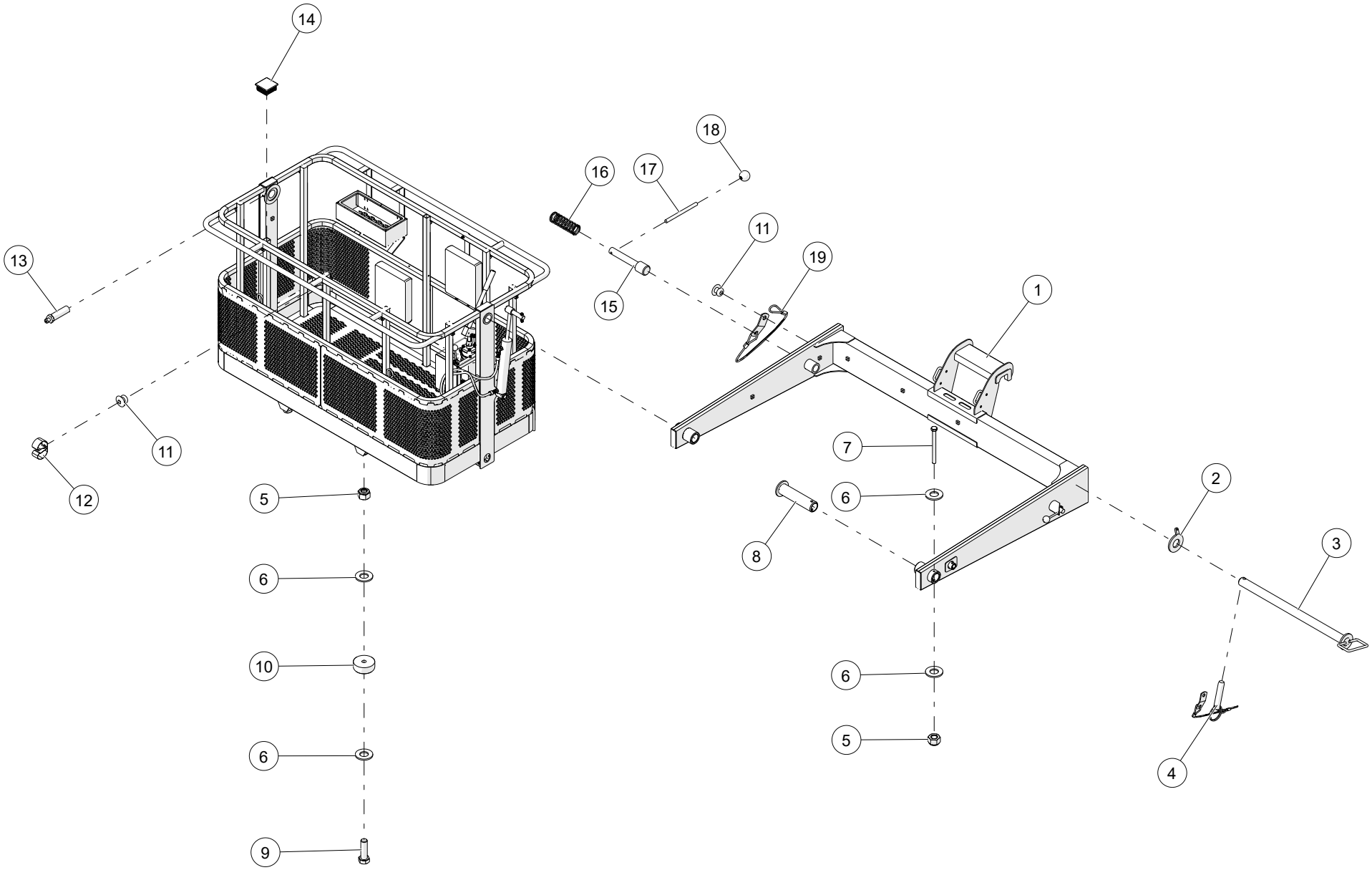

WHEN ORDERING PARTS, SPECIFY MODEL NUMBER, SERIAL NUMBER AND DESCRIPTION OF PARTS REQUIRED

LONG STRAIGHT MAN BASKET

ITEM	PART NUMBER	DESCRIPTION	QUANTITY	NOTES
	1037484	**LONG STRAIGHT MAN BASKET**		
1	1037485	LONG YOKE MAN BASKET	1	
2	1032887	YOKE MOUNT PIN, RETAINING WASHER	1	
3	1032888	YOKE MOUNT PIN WELDMENT	1	
4	1033284	RING-GRIP QUICK-RELEASE PIN, 3/8" X 1-1/8" WITH 6" LANYARD	1	
5	NUT3-C3130008Z0	NYLON LOCK NUT, 5/16-18, GR8, ZN	6	
6	WSH2-X3750008Z0	SAE WASHER, 3/8, GR8, ZN	14	
7	HHCS-C313C758R1	HEX HEAD CAP SCREW, 5/16-18 X 3 3/4 LEN, GR8, NF, FULL THREAD	2	
8	1032957	BASKET PRIMARY PIN WELDMENT	2	
9	HHCS-C375A258Z0	HEX HEAD CAP SCREW, 3/8-16 X 1 1/4 LEN, GR8, ZN	6	
10	1033148	RUBBER BUMPER FOOT	6	
11	1033209	BLIND RIVET, 3/16" X 0.032-0.375	14	
12	1033286	TOOL HOLDER, 1/2"	9	
13	1033211	GREASE FITTING, 1/8"-27, 1-3/4"L	2	
14	1033287	SQ TUBE CAP - 1-1/4IN	9	
15	1037731	PIN, BASKET RETENTION	2	
16	1038378	Spring	2	
17	1038467	ROD, HANDLE SHAFT	2	
18	1038379	BALL KNOB	2	
19	1033245	LANYARD LOOP-TO-TAB, 1/16" ROPE X 24" LONG	1	

WHEN ORDERING PARTS, SPECIFY MODEL NUMBER, SERIAL NUMBER AND DESCRIPTION OF PARTS REQUIRED

LONG STRAIGHT MAN BASKET

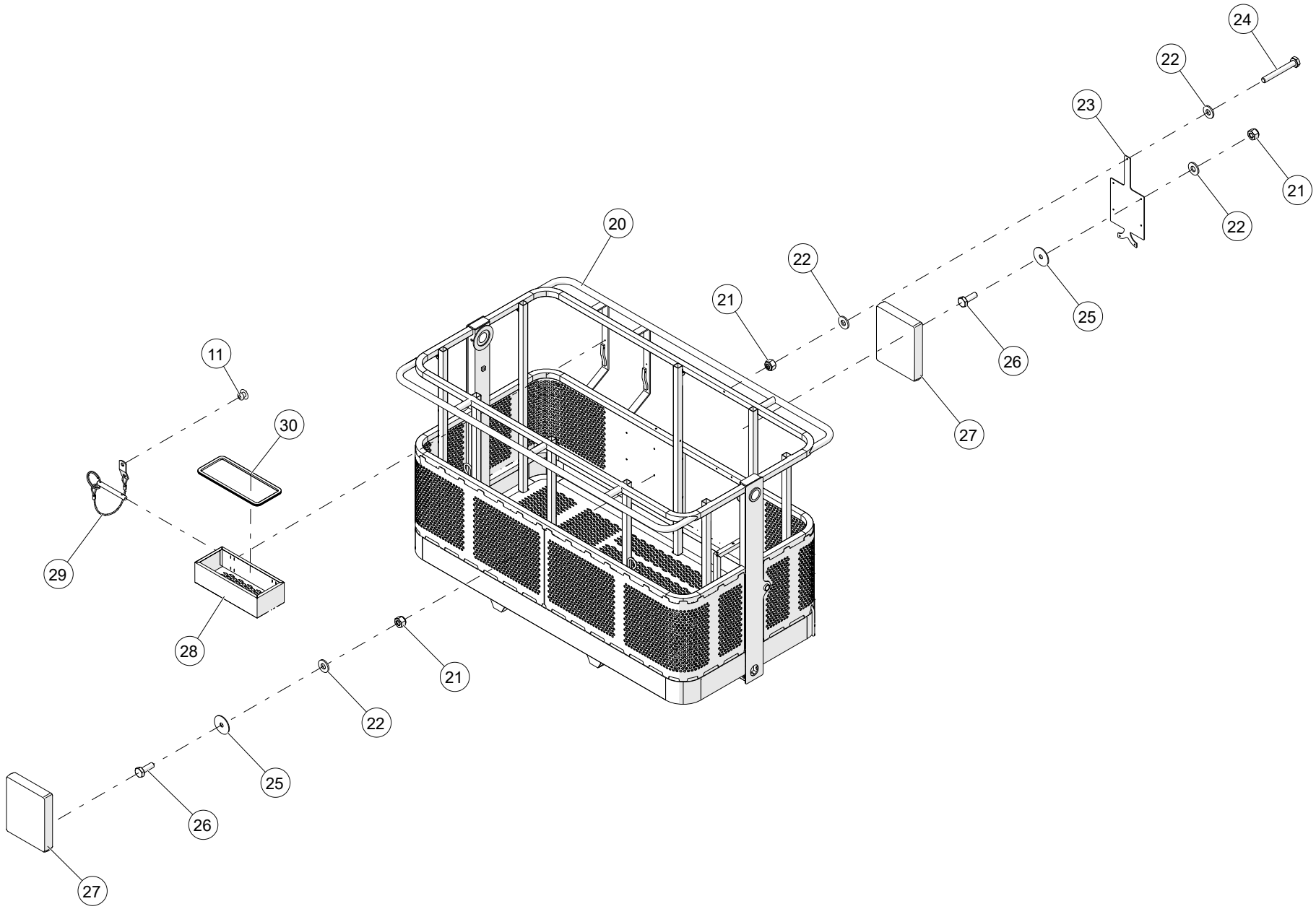

WHEN ORDERING PARTS, SPECIFY MODEL NUMBER, SERIAL NUMBER AND DESCRIPTION OF PARTS REQUIRED

LONG STRAIGHT MAN BASKET

ITEM	PART NUMBER	DESCRIPTION	QUANTITY	NOTES
	1037484	**LONG STRAIGHT MAN BASKET**		
20	1032917	MAN BASKET WELDMENT	1	
21	NUT3-C2500005Z0	NYLON LOCK NUT, 1/4-20, GR5, ZN	11	
22	WSH2-X2500008Z0	SAE WASHER, 1/4, GR8, ZN	26	
23	1032961	DOC BOX PANEL	1	
24	HHCS-C250B008R0	HEX HEAD CAP SCREW, 1/4-20 X 2 LEN, GR8, NF	3	
25	1033196	OVERSIZED FLAT WASHER, 1/4" SCREW	8	
26	HHCS-C2507505Z0	HEX HEAD CAP SCREW, 1/4-20 X 3/4 LEN, GR5, ZN	16	
27	1033379	MANUAL-PAK	2	
28	1032963	TOOL BASKET WELDMENT	1	
29	1033288	RING-GRIP QUICK-RELEASE PIN, 1/4" X 1-5/8" WITH 6" LANYARD	2	
30	1033285	U-CHANNEL PUSH-ON TRIM, 1/8" X 31/64" X 40-3/4" LONG	1	

WHEN ORDERING PARTS, SPECIFY MODEL NUMBER, SERIAL NUMBER AND DESCRIPTION OF PARTS REQUIRED

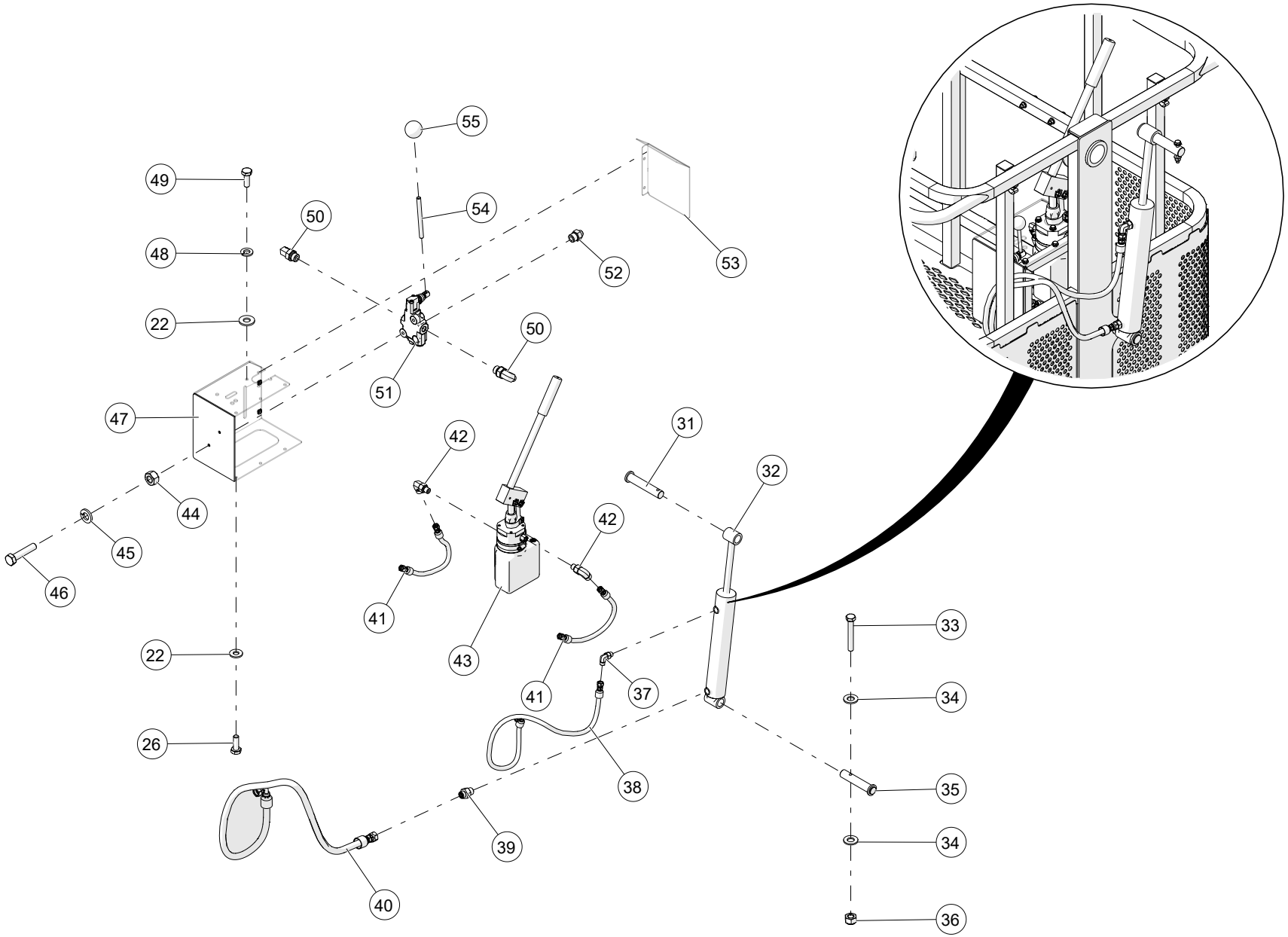

WHEN ORDERING PARTS, SPECIFY MODEL NUMBER, SERIAL NUMBER AND DESCRIPTION OF PARTS REQUIRED

ITEM	PART NUMBER	DESCRIPTION	QUANTITY	NOTES
	1037484	**LONG STRAIGHT MAN BASKET**		
31	1032913	HYDRAULIC PIN (YOKE) WELDMENT	1	
32	1033031	HYDRAULIC CYLINDER	1	
33	HHCS-C313B255Z0	HEX HEAD CAP SCREW, 5/16-18 X 2 1/4 LEN, GR5, ZN	2	
34	WSH2-X3130008Z0	SAE WASHER, 5/16, GR8, ZN	6	
35	1032954	HYDRAULIC PIN (BASKET) WELDMENT	1	
36	NUT3-C3130005Z0	NYLON LOCK NUT, 5/16-18, GR5, ZN	2	
37	1013998	ELBOW, 90, MOFS-4/MORB-6	1	
38	1034349	HOSE, -4, 3000, FOFS-4SW/90 FOFS-4SW, 42.75	1	
39	1010068	ADAPTER, MOFS-4/MORB-6	1	
40	1034354	HOSE, -4, 3000, FOFS-4SW/90 FOFS-4SW, 31.5	1	
41	1034361	HOSE, -4, 3000, FOFS-4SW/FOFS-4SW, 16.5	2	
42	1013997	ELBOW, 90, MOFS-4/MORB-4	2	
43	1008350	PUMP, MAN BASKET	1	
44	NUT1-C3130008Z0	HEX NUT, 5/16-18, GR8, ZN	2	
45	WSH4-X3130008Z0	SPIRAL LOCK WASHER, 5/16, GR8, ZN	2	
46	HHCS-C313A508R0	HEX HEAD CAP SCREW, 5/16-18 X 1 1/2 LEN, GR8, NF	2	
47	1032969	CONTROL BOX WELDMENT	1	
48	WSH4-X2500008Z0	SPIRAL LOCK WASHER, 1/4, GR8, ZN	4	
49	HHCS-C2507508R0	HEX HEAD CAP SCREW, 1/4-20 X 3/4 LEN, GR8, NF	4	
50	1013999	ELBOW, 90, MOFS-4/MORB-8	2	
51	1008349	VALVE, MAN BASKET LEVEL	1	
52	1010069	ADAPTER, MOFS-4/MORB-8	2	
53	1032968	CONTROL BOX COVER	1	
54	1034406	ALL THREAD, M8X1.25X4IN	1	
55	1034414	KNOB, RED BALL, THREADED M8X1.25, 1.4"	1	

WHEN ORDERING PARTS, SPECIFY MODEL NUMBER, SERIAL NUMBER AND DESCRIPTION OF PARTS REQUIRED

50-155 M & 50-155 U BASKET STOWAGE INSTALLATION

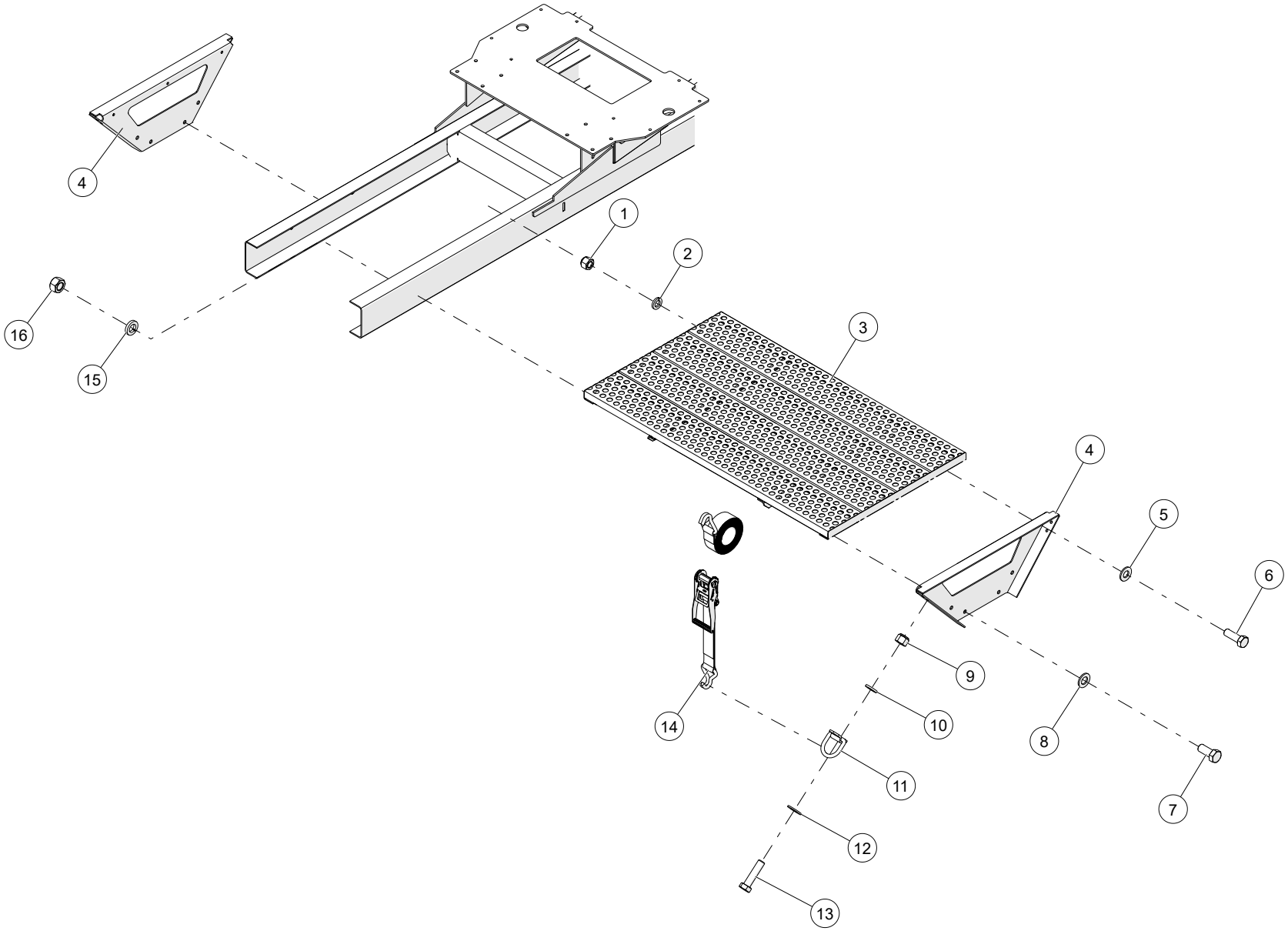

WHEN ORDERING PARTS, SPECIFY MODEL NUMBER, SERIAL NUMBER AND DESCRIPTION OF PARTS REQUIRED

ITEM	PART NUMBER	DESCRIPTION	QUANTITY	NOTES
	1038767	**50-155 M & 50-155 U BASKET STOWAGE INSTALLATION**		
1	NUT3-C5000008Z0	NYLON LOCK NUT, 1/2-13, GR8, ZN	6	
2	WSH4-X5000008Z0	SPIRAL LOCK WASHER, 1/2, GR8, ZN	6	
3	1038932	WELDMENT, BASKET PLATFORM	1	
4	1038820	PLATE, BASKET PLATFORM	2	
5	WSH2-X5000008Z0	SAE WASHER, 1/2, GR8, ZN	6	
6	HHCS-C500A508Z0	HEX HEAD CAP SCREW, 1/2-13 X 1 1/2 LEN, GR8, ZN	6	
7	HHCS-C750A758M0	HEX HEAD CAP SCREW, 3/4-10 X 1 3/4 LEN, GR8, MA	8	
8	WSH2-X7500008Z0	SAE WASHER, 3/4, GR8, ZN	8	
9	NUT3-C3750008Z0	NYLON LOCK NUT, 3/8-16, GR8, ZN	8	
10	WSH4-X3750008Z0	SPIRAL LOCK WASHER, 3/8, GR8, ZN	8	
11	1039288	TIE DOWN RING	4	
12	WSH2-X3750008Z0	SAE WASHER, 3/8, GR8, ZN	8	
13	HHCS-C375A508Z0	HEX HEAD CAP SCREW, 3/8-16 X 1 1/2 LEN, GR8, ZN	8	
14	1038961	RATCHET STRAP 2"X12' 2,000 CAPACITY	2	
15	WSH5-X7500008Z0	SPIRAL LOCK WASHER, 3/4, GR8, ZN	8	
16	NUT1-C7500008M0	HEX NUT, 3/4-10, GR8, MA	8	

WHEN ORDERING PARTS, SPECIFY MODEL NUMBER, SERIAL NUMBER AND DESCRIPTION OF PARTS REQUIRED

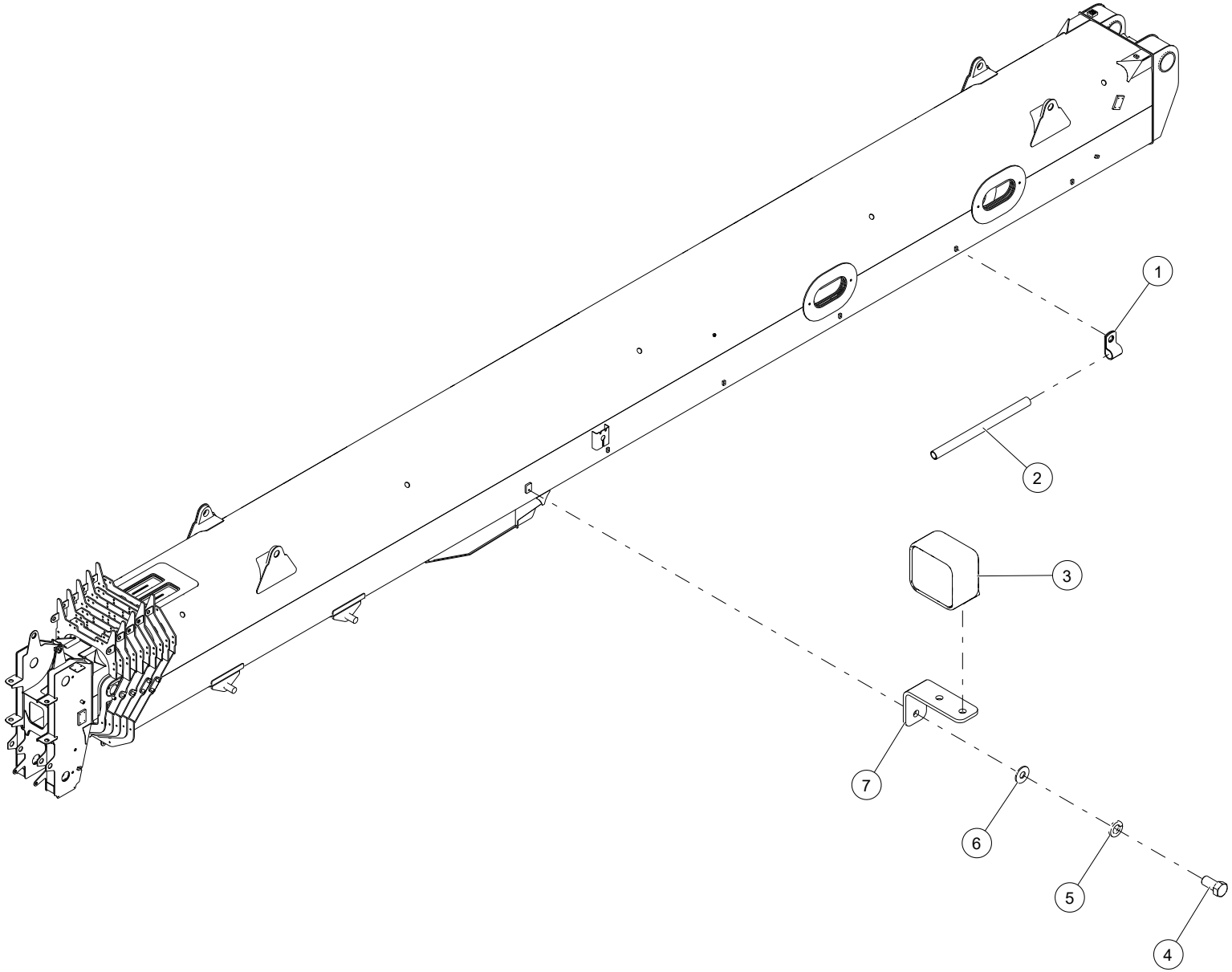

WHEN ORDERING PARTS, SPECIFY MODEL NUMBER, SERIAL NUMBER AND DESCRIPTION OF PARTS REQUIRED

WORK LIGHT INSTALLATION

ITEM	PART NUMBER	DESCRIPTION	QUANTITY	NOTES
	1035133	**WORK LIGHT INSTALLATION**		
1	200B2007-4	CLAMP, MED, 1/2 ID	5	
2	206F4255	TUBE	1	
3	T111783	LIGHT, WORK	2	
4	HHCS-C4388755Z0	HEX HEAD CAP SCREW, 7/16-14 X 7/8 LEN, GR5, ZN	2	
5	WSH4-X4380008Z0	SPIRAL LOCK WASHER, 7/16, GR8, ZN	2	
6	WSH3-X4380008Z0	FENDER WASHER, 7/16, GR8, ZN	2	
7	707-4688	BRACKET	2	

WHEN ORDERING PARTS, SPECIFY MODEL NUMBER, SERIAL NUMBER AND DESCRIPTION OF PARTS REQUIRED

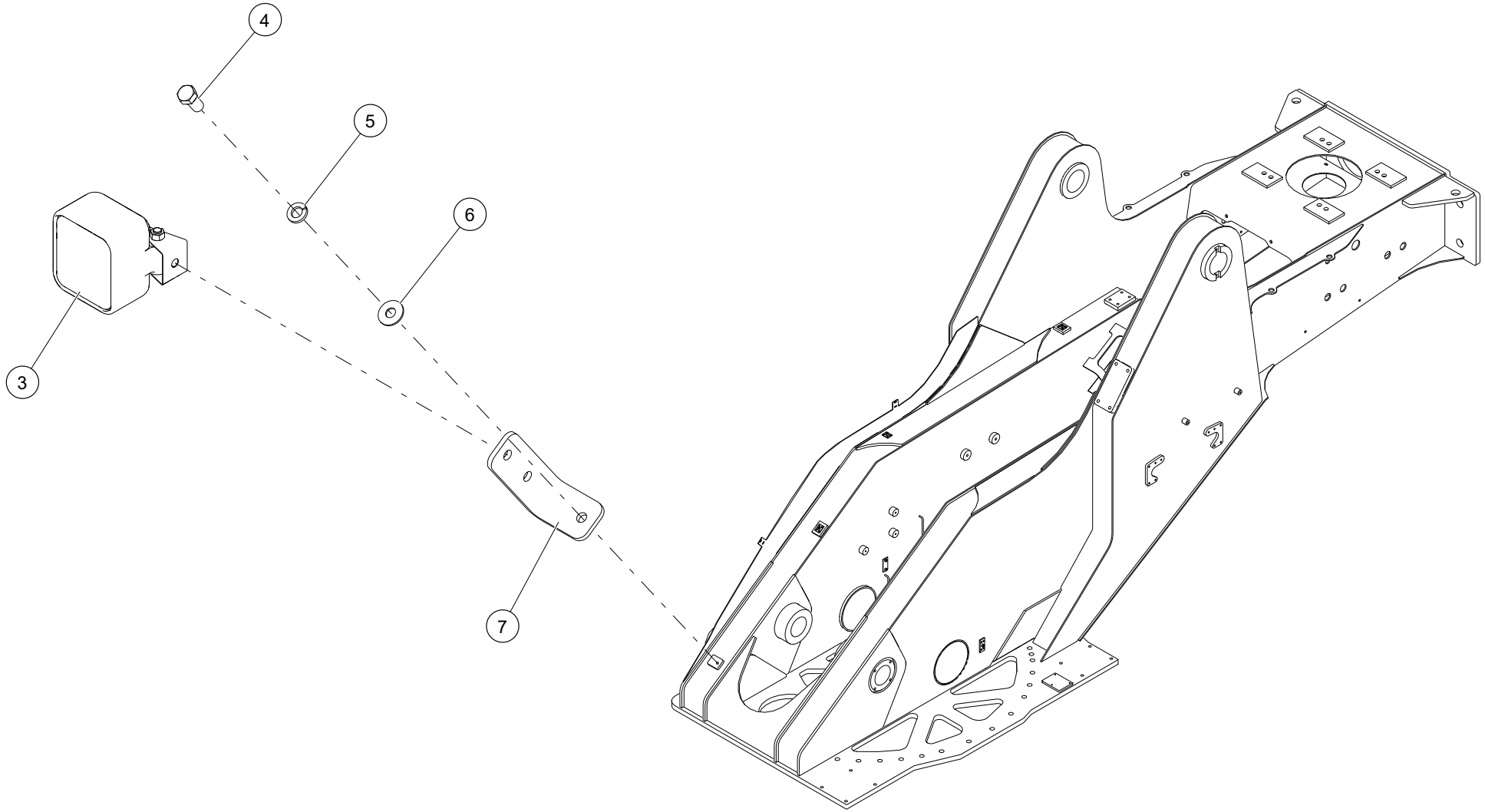

WHEN ORDERING PARTS, SPECIFY MODEL NUMBER, SERIAL NUMBER AND DESCRIPTION OF PARTS REQUIRED

WORK LIGHT INSTALLATION

ITEM	PART NUMBER	DESCRIPTION	QUANTITY	NOTES
	1035133	**WORK LIGHT INSTALLATION**		
1	200B2007-4	CLAMP, MED, 1/2 ID	5	
2	206F4255	TUBE	1	
3	T111783	LIGHT, WORK	2	
4	HHCS-C4388755Z0	HEX HEAD CAP SCREW, 7/16-14 X 7/8 LEN, GR5, ZN	2	
5	WSH4-X4380008Z0	SPIRAL LOCK WASHER, 7/16, GR8, ZN	2	
6	WSH3-X4380008Z0	FENDER WASHER, 7/16, GR8, ZN	2	
7	707-4688	BRACKET	2	

WHEN ORDERING PARTS, SPECIFY MODEL NUMBER, SERIAL NUMBER AND DESCRIPTION OF PARTS REQUIRED

STROBE LIGHT INSTALLATION

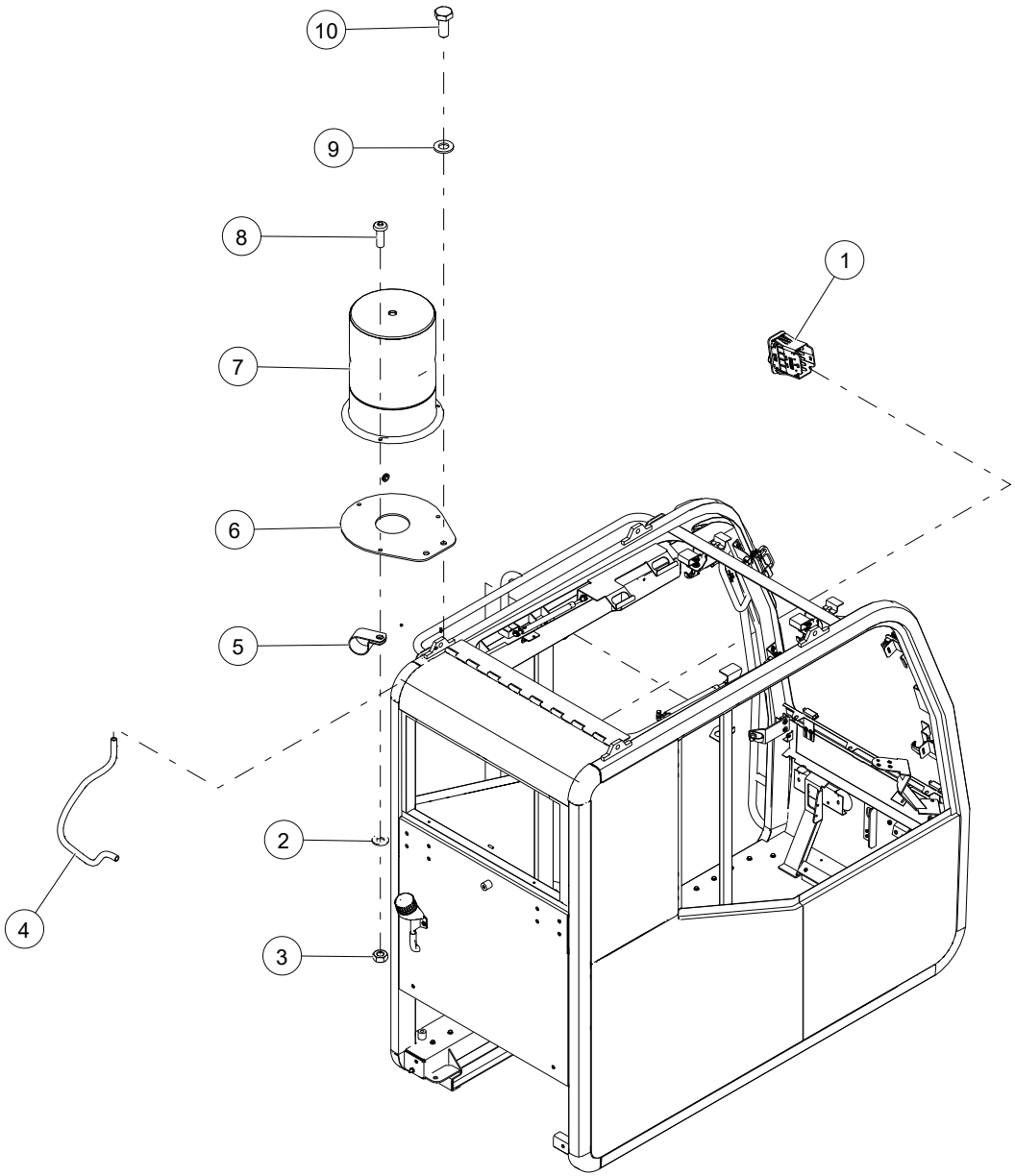

WHEN ORDERING PARTS, SPECIFY MODEL NUMBER, SERIAL NUMBER AND DESCRIPTION OF PARTS REQUIRED

STROBE LIGHT INSTALLATION

ITEM	PART NUMBER	DESCRIPTION	QUANTITY	NOTES
	T124067	**STROBE LIGHT INSTALLATION**		
1	1223-1026	SWITCH, BEACON	1	
2	WMF-40MX000-20	WSH, FLAT M4 DIN125, ST SQC	3	
3	N24-407M000-28	NUT, HEX M4-0.7, DIN 934, ST SQC C8.8	3	
4	400-01411	LOOM, SPLIT POLY-1/4 (FEET)	1	
5	1240-51	CLAMP	1	
6	T121519	BRACKET, STROBE LIGHT	1	
7	420-4974	LIGHT, STROBE	1	
8	S46-407M012-28	SCR, BHSHCHS, M4-0.7X12, ST SQC C8.8	3	
9	WMF-80MX000-20	WSH, FLAT M8 DIN125, ST SQC	2	
10	SMF-08BM018-28	SCR, HHCS M8-1.25X18 FT,STZ 8.8	2	
11*	1223-872	SOCKET	2	
12*	T135407	WEDGE LOCK, W2P	1	

NOTE: *NOT SHOW IN THE ILLUSTRATION

WHEN ORDERING PARTS, SPECIFY MODEL NUMBER, SERIAL NUMBER AND DESCRIPTION OF PARTS REQUIRED

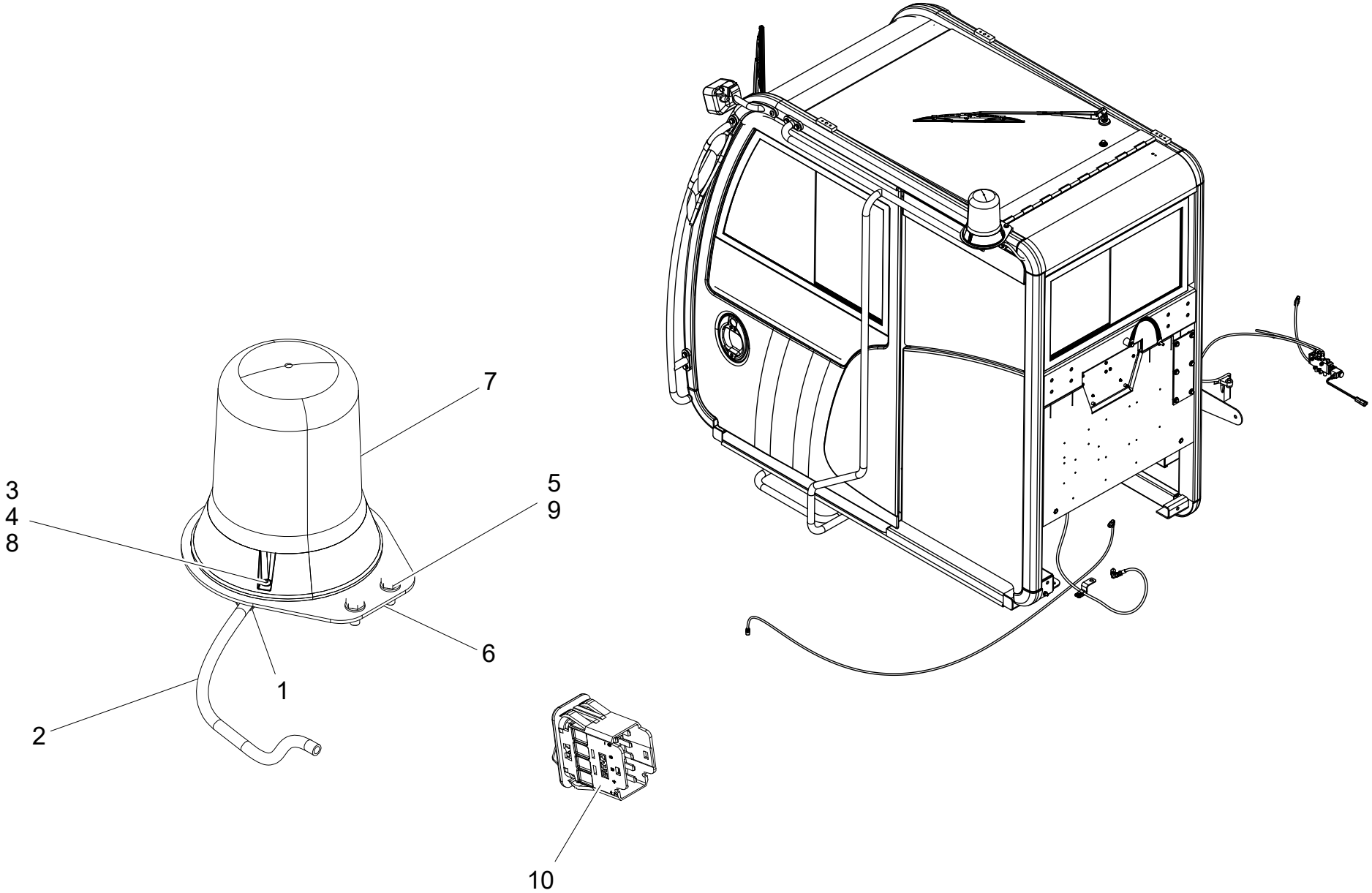

WHEN ORDERING PARTS, SPECIFY MODEL NUMBER, SERIAL NUMBER AND DESCRIPTION OF PARTS REQUIRED

REVOLVING AMBER LIGHT INSTALLATION

ITEM	PART NUMBER	DESCRIPTION	QUANTITY	NOTES
	T134670	**REVOLVING AMBER LIGHT INSTALLATION**		
1	1240-51	CLAMP	1	
2	400-01411	LOOM, SPLIT POLY-1/4 (FEET)	1	
3	N24-407M000-28	NUT, HEX M4-0.7, DIN 934, ST SQC C8.8	3	
4	S46-407M016-28	BHSHCS, M4-0.7 X 16	3	
5	SMF-08BM018-28	SCR, HHCS M8-1.25X18 FT, STZ 8.8	2	
6	T134675	BRACKET, REVOLVING AMBER LIGHT	1	
7	T135443	LIGHT, REVOLVING, AMBER	1	
8	WMF-40MX000-20	WSH, FLAT M4 DIN125, ST SQC	3	
9	WMF-80MX000-20	WSH, FLAT M8 DIN125, ST SQC	2	
10	1223-1026	SWITCH, BEACON	1	

WHEN ORDERING PARTS, SPECIFY MODEL NUMBER, SERIAL NUMBER AND DESCRIPTION OF PARTS REQUIRED

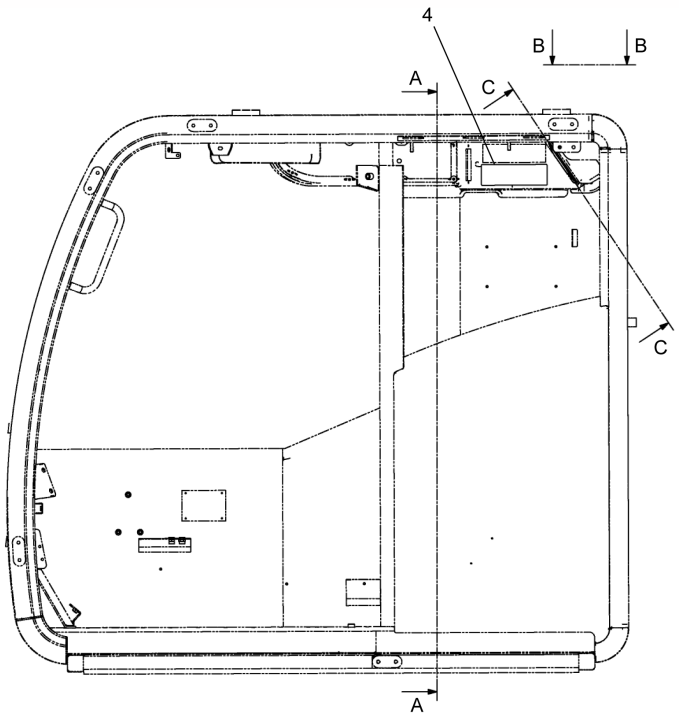

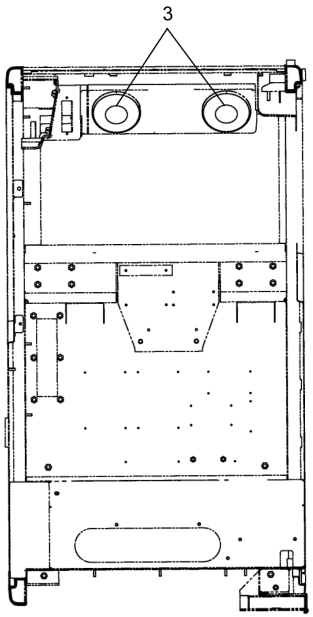

SECTION A-A

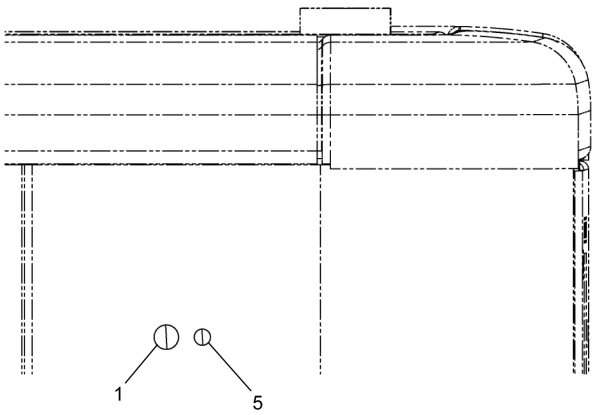

VIEW B-B

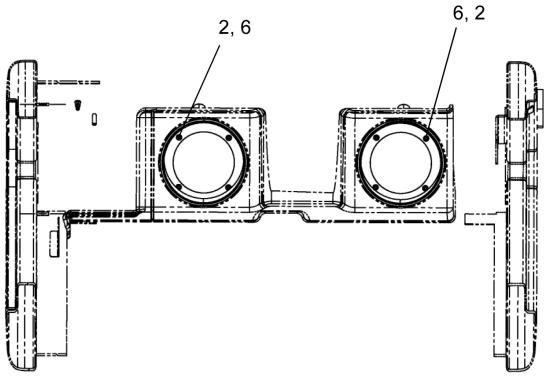

SECTION C-C

WHEN ORDERING PARTS, SPECIFY MODEL NUMBER, SERIAL NUMBER AND DESCRIPTION OF PARTS REQUIRED

NO RADIO OPTION

ITEM	PART NUMBER	DESCRIPTION	QUANTITY	NOTES
	T127309	**NO RADIO OPTION**		
1	1222-219	PLUG, 5/16 HOLE	1	
2	S46-407M80M-B1	BHSHCS, M4-0.7 X 8, BLK OX, C10.9	8	
3	T111788	COVER, SPEAKER	2	
4	T122107	COVER PLATE, DIN POCKET	1	
5	T132672	PLUG, BLACK DOME, 3/16	1	
6	WMF-40MX000-BX	WSH, FLAT M4 DIN125, STL, BLK OX	8	

WHEN ORDERING PARTS, SPECIFY MODEL NUMBER, SERIAL NUMBER AND DESCRIPTION OF PARTS REQUIRED

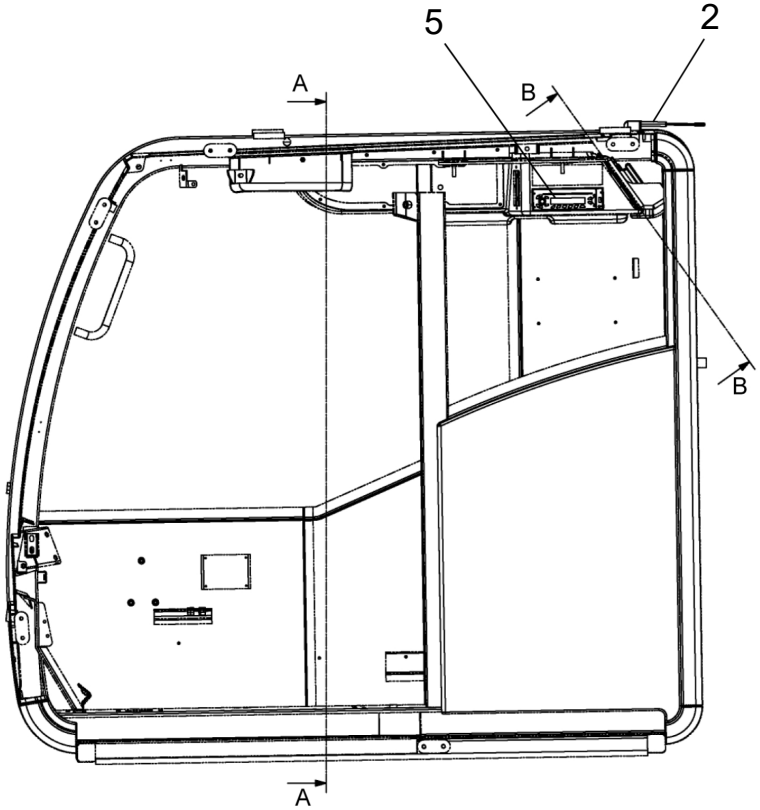

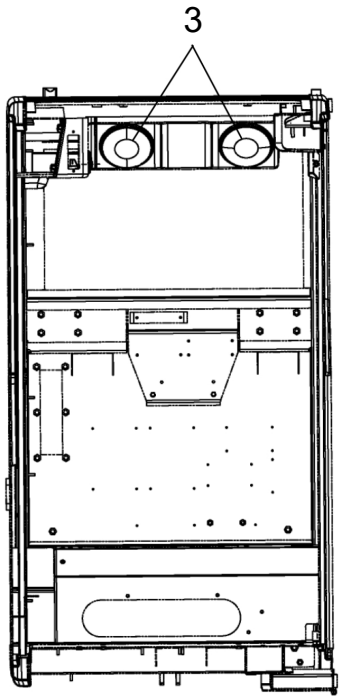

SECTION A-A

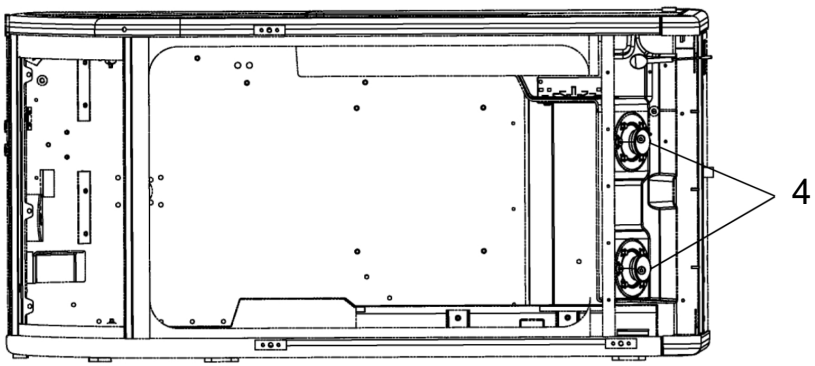

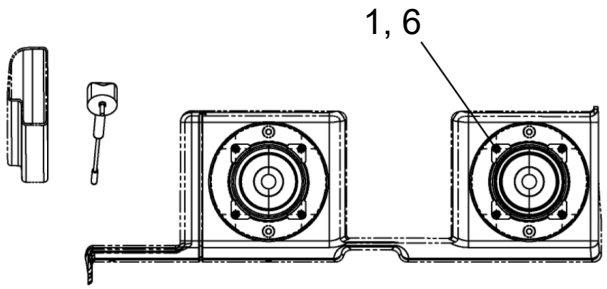

SECTION B-B

WHEN ORDERING PARTS, SPECIFY MODEL NUMBER, SERIAL NUMBER AND DESCRIPTION OF PARTS REQUIRED

RADIO OPTION

ITEM	PART NUMBER	DESCRIPTION	QUANTITY	NOTES
	1027226	**RADIO OPTION**		
1	S46-407M80M-B1	BHSHCS, M4-0.7 X 8, BLK OX, C10.9	8	
2	T111787	ANTENNA	1	
3	T111788	COVER, SPEAKER	2	
4	T111789	SPEAKER	2	
5	1027227	RADIO, AM/FM/CD	1	
6	WMF-40MX000-P0	WSH, FLAT M4 DIN125, STL	8	

WHEN ORDERING PARTS, SPECIFY MODEL NUMBER, SERIAL NUMBER AND DESCRIPTION OF PARTS REQUIRED

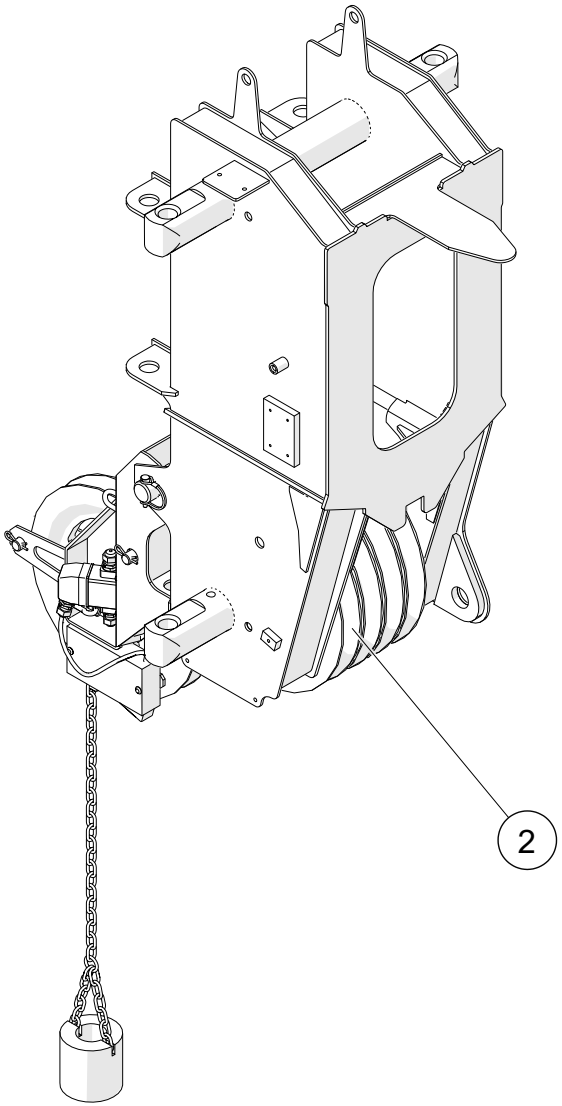

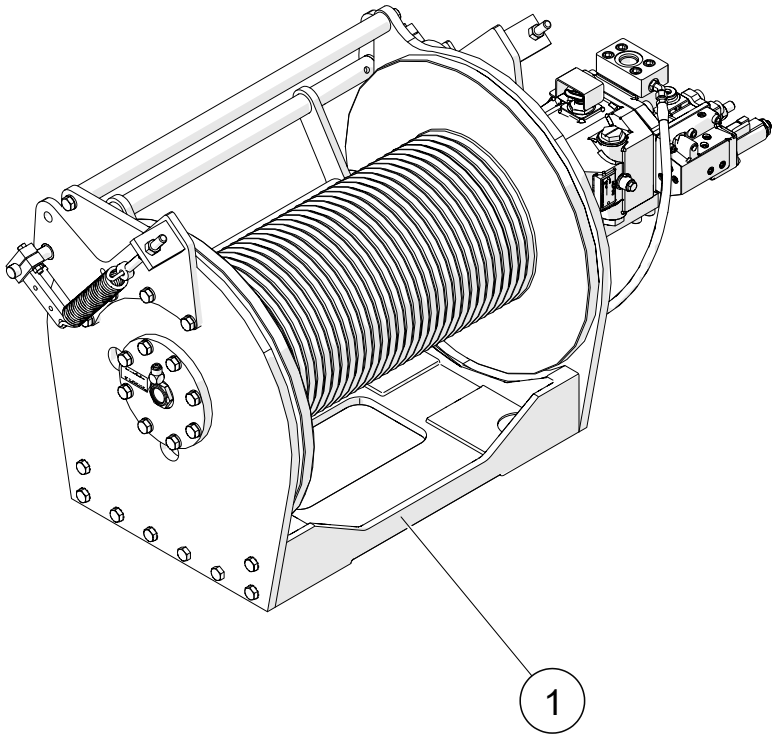

WHEN ORDERING PARTS, SPECIFY MODEL NUMBER, SERIAL NUMBER AND DESCRIPTION OF PARTS REQUIRED

ITEM	PART NUMBER	DESCRIPTION	QUANTITY	NOTES
	1035204	**50-155 M & 50-155 U AUX WINCH OPTION**		
1	**1035205**	AUX WINCH ASSEMBLY	1	SEE PAGE 335
2	**1040357**	AUX HEAD ASSEMBLY	1	SEE PAGE 337

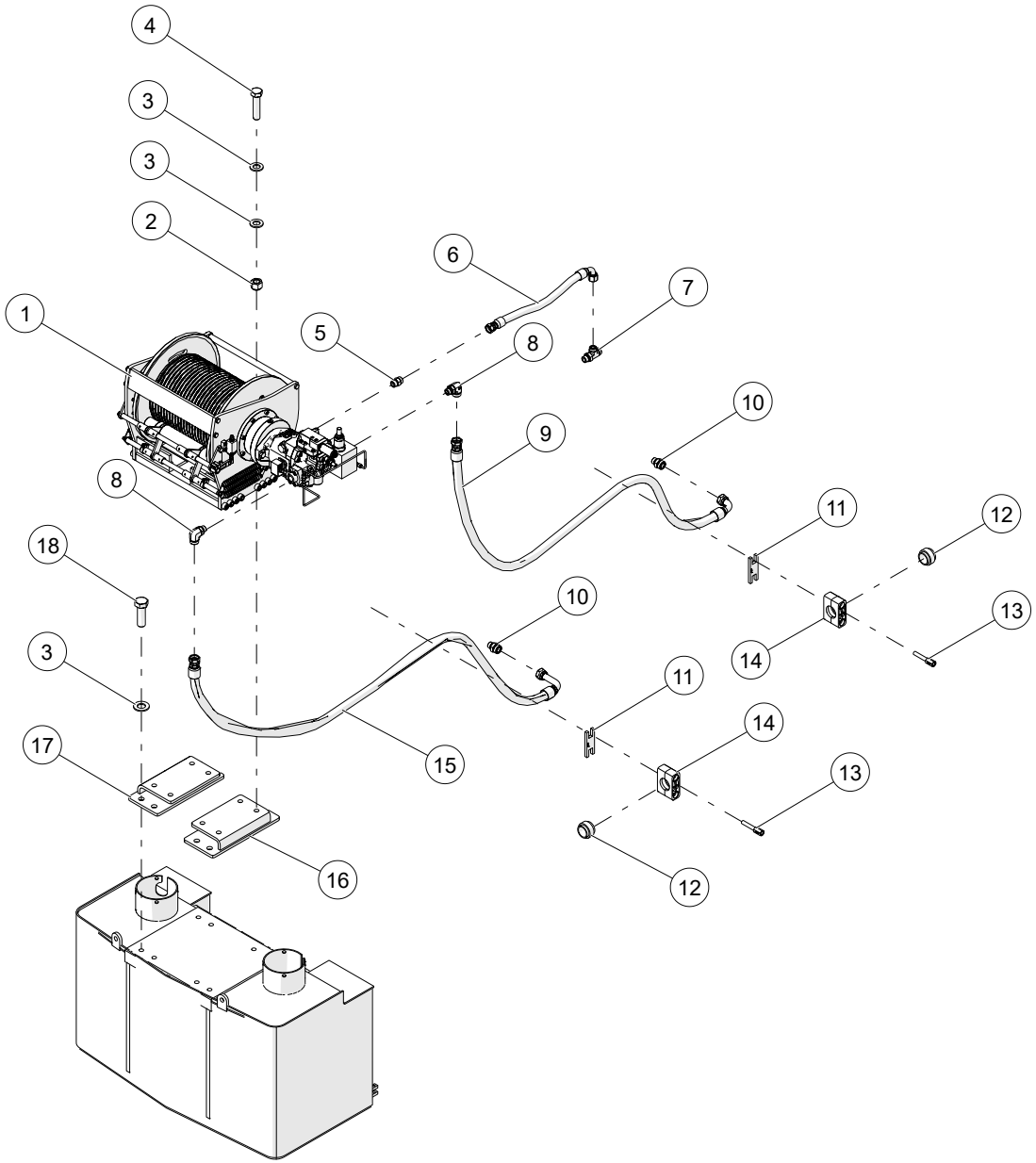

WHEN ORDERING PARTS, SPECIFY MODEL NUMBER, SERIAL NUMBER AND DESCRIPTION OF PARTS REQUIRED

AUX WINCH ASSEMBLY

ITEM	PART NUMBER	DESCRIPTION	QUANTITY	NOTES
	1035205	**AUX WINCH ASSEMBLY**		
1	1008361	WINCH, MAIN/AUX (DYNAMIC)	1	
2	NUT3-C7500008M0	NYLON LOCK NUT, 3/4-10, GR8, MA	8	
3	WSH2-X7500008Z0	SAE WASHER, 3/4, GR8, ZN	24	
4	HHCS-C750C258M0	HEX HEAD CAP SCREW	8	
5	1010088	ADAPTER, MOFS-12/MORB-12	1	
6	1027915	HOSE, -12, 300, FOFS-12SW / 90FOFS-12SW, 24.5	1	
7	1018090	TEE, MOFS-12/MORB-12/MOFS-12	1	
8	1014022	ELBOW, 90, MOFS-16/MORB-12	2	
9	1027906	HOSE, -16, 3000, FOFS-16SW / 90FOFS-16SW, 98.25	1	
10	1010092	ADAPTER, MOFS-16/MORB-12	2	
11	1034061	STAUFF LOCK PLATE, SIP-5S-W2	2	
12	1034063	RI-32-6/5S	2	
13	1034060	AF-5S-U-W3	4	
14	1034057	5S-PP-R	2	
15	1027907	HOSE, -16, 3000, FOFS-16SW / L90FOFS-16SW, 111.25	1	
16	1037261	WELDM'T, CWT WINCH MOUNT LH	1	
17	1037267	WELDM'T, CWT WINCH MOUNT RH	1	
18	HHCS-C750C758M0	HEX HEAD CAP SCREW, 3/4-10 X 3 3/4 LEN, GR8, MA	16	

WHEN ORDERING PARTS, SPECIFY MODEL NUMBER, SERIAL NUMBER AND DESCRIPTION OF PARTS REQUIRED

AUX HEAD ASSEMBLY

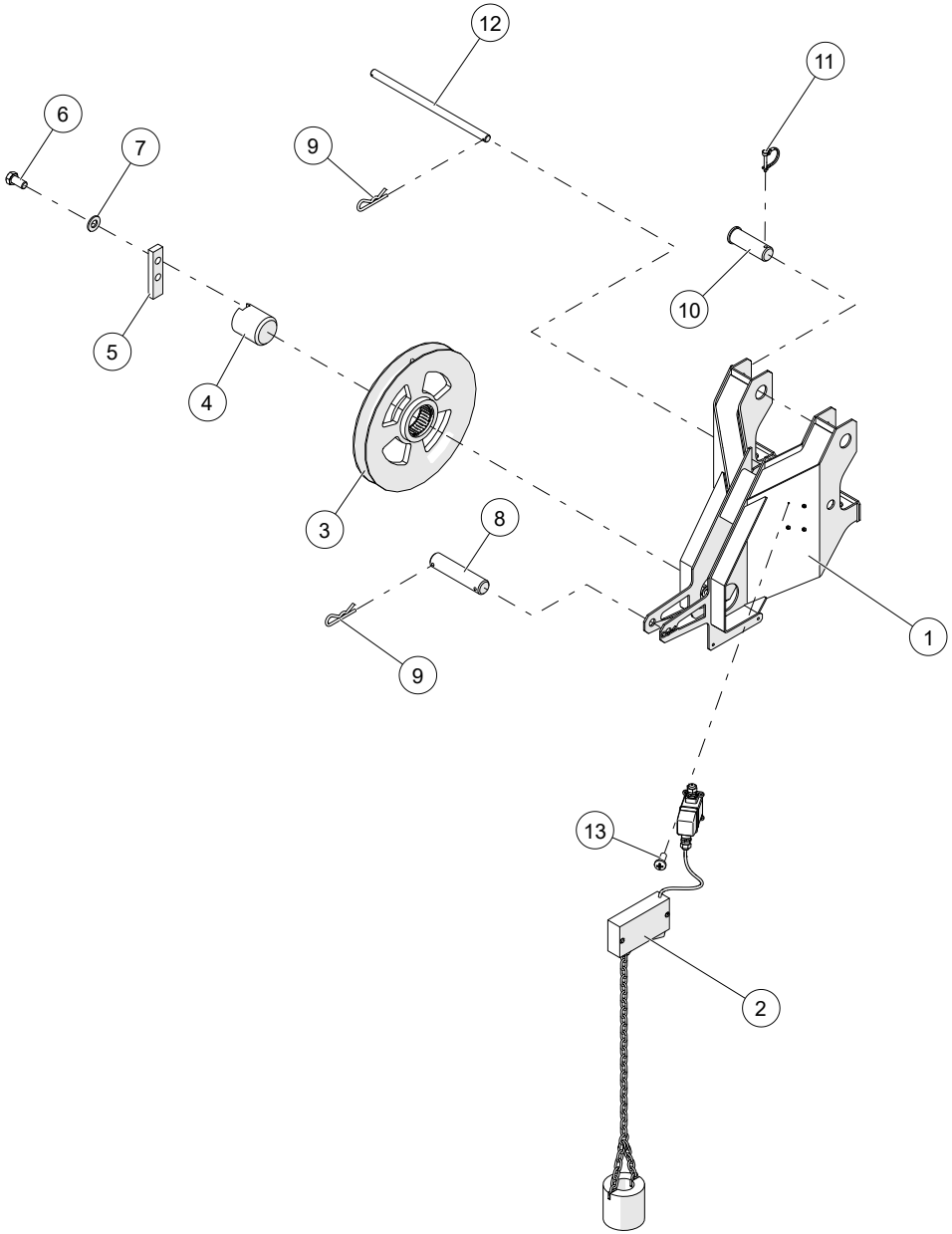

WHEN ORDERING PARTS, SPECIFY MODEL NUMBER, SERIAL NUMBER AND DESCRIPTION OF PARTS REQUIRED

AUX HEAD ASSEMBLY

ITEM	PART NUMBER	DESCRIPTION	QUANTITY	NOTES
	1040357	**AUX HEAD ASSEMBLY**		
1	1033813	WELDMENT, AUX SHEAVE	1	
2	706A8816	ANTI TWO-BLOCK ASM, AUX SHEAVE	1	
3	1004432	ASSEMBLY, BOOM HEAD SHEAVE	1	
4	1025734	PIN, 3.00 DIA X 3.375 LEN	1	
5	1025735	BAR, PIN KEEPER	1	
6	HHCS-C500A008Z0	HEX HEAD CAP SCREW, 1/2-13 X 1 LEN, GR8, ZN	4	
7	WSH2-X5000008Z0	SAE WASHER, 1/2, GR8, ZN	4	
8	1025749	ROUND, WIRE ROPE KEEPER	1	
9	PIN2-X125B00YZ0	HAIRPIN, 1/8 DIA X 2 LEN, ZINC	4	
10	1025737	PIN, 1.5 DIA X 4.5 LEN	2	
11	PIN4-X250A37XZ0	LOCK PIN WITH ROUNDED RETAINER, 1/4 DIA X 1 3/8 LEN, ZINC	2	
12	1025738	ROUND, WIRE ROPE KEEPER	1	
13	MS07-C190500ZR0	MACHINE SCREW, 10-24 X 1/2 LEN, NF	4	

WHEN ORDERING PARTS, SPECIFY MODEL NUMBER, SERIAL NUMBER AND DESCRIPTION OF PARTS REQUIRED

NON - ILLUSTRATED PAGE

COLD WEATHER OPTIONS

ITEM	PART NUMBER	DESCRIPTION	QUANTITY	NOTES
	1008824	**COLD WEATHER OPTIONS**		
1	**1027221**	HYD. IMMERSION HEATER,120/240V	1	SEE PAGE 341

WHEN ORDERING PARTS, SPECIFY MODEL NUMBER, SERIAL NUMBER AND DESCRIPTION OF PARTS REQUIRED

NON - ILLUSTRATED PAGE

HYD. IMMERSION HEATER,120/240V

ITEM	PART NUMBER	DESCRIPTION	QUANTITY	NOTES
	1027221	**HYD. IMMERSION HEATER,120/240V**		
1	**1223-1028**	HEATER, IMMERSION	1	SEE PAGE 343

WHEN ORDERING PARTS, SPECIFY MODEL NUMBER, SERIAL NUMBER AND DESCRIPTION OF PARTS REQUIRED

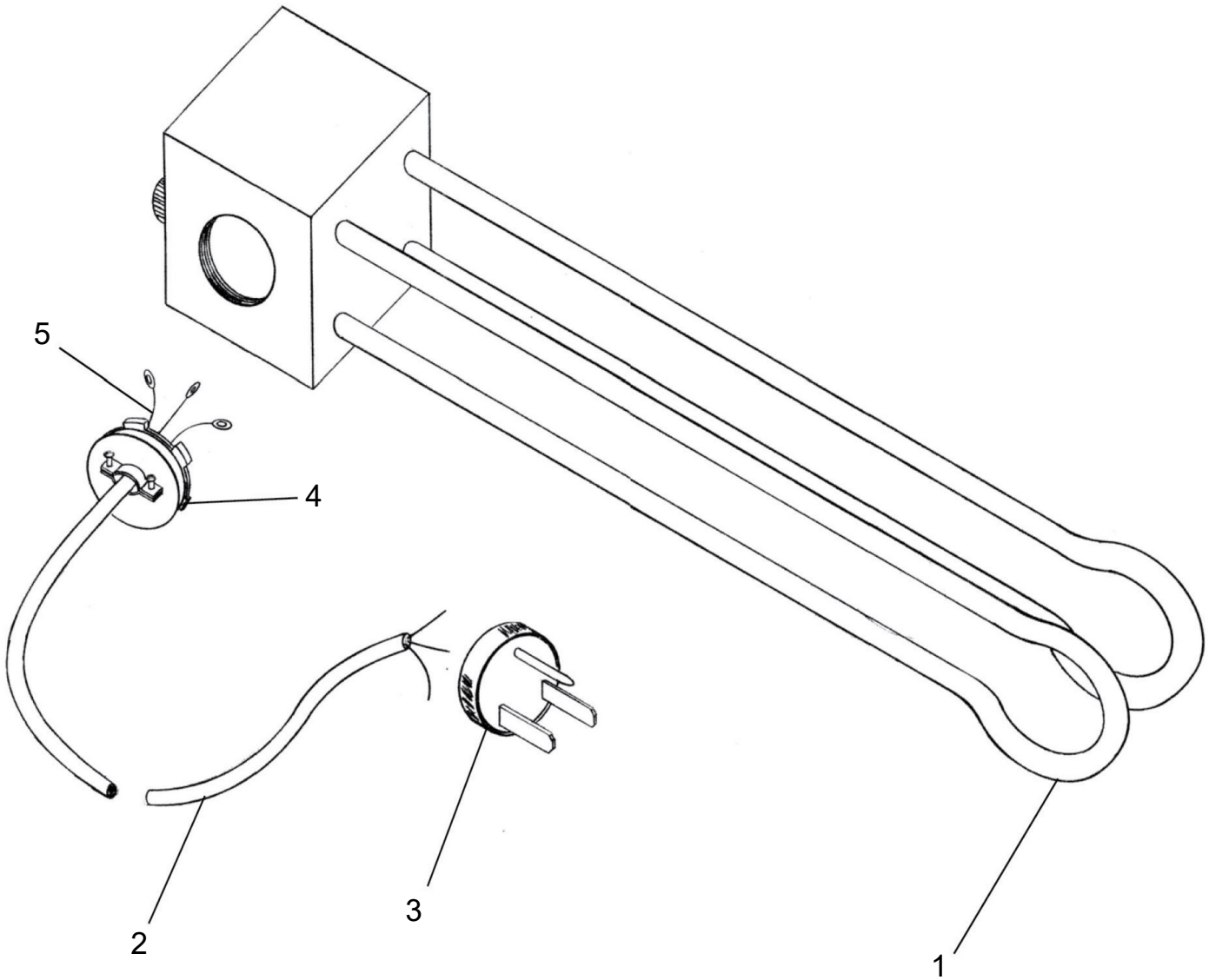

WHEN ORDERING PARTS, SPECIFY MODEL NUMBER, SERIAL NUMBER AND DESCRIPTION OF PARTS REQUIRED

HEATER, IMMERSION

ITEM	PART NUMBER	DESCRIPTION	QUANTITY	NOTES
	1223-1028	**HEATER, IMMERSION**		
1	442-0316	IMMERSION HEATER	1	
2	12239-36	CORD, 12GA. 3 WIRE	1	
3	1223-478	PLUG	1	
4	1223-819	CONNECTOR	1	
5	1223-54	TERMINAL	3	

WHEN ORDERING PARTS, SPECIFY MODEL NUMBER, SERIAL NUMBER AND DESCRIPTION OF PARTS REQUIRED

NON - ILLUSTRATED PAGE

XO WIRELESS CONTROL OPTIONS

ITEM	PART NUMBER	DESCRIPTION	QUANTITY	NOTES
	1035213	**XO WIRELESS CONTROL OPTIONS**		
1	**1025691**	BELLY PACK ONLY	1	SEE PAGE 347
2	**1039645**	BELLY PACK FOR LUFFING JIB	1	SEE PAGE 349

WHEN ORDERING PARTS, SPECIFY MODEL NUMBER, SERIAL NUMBER AND DESCRIPTION OF PARTS REQUIRED

BELLY PACK ONLY

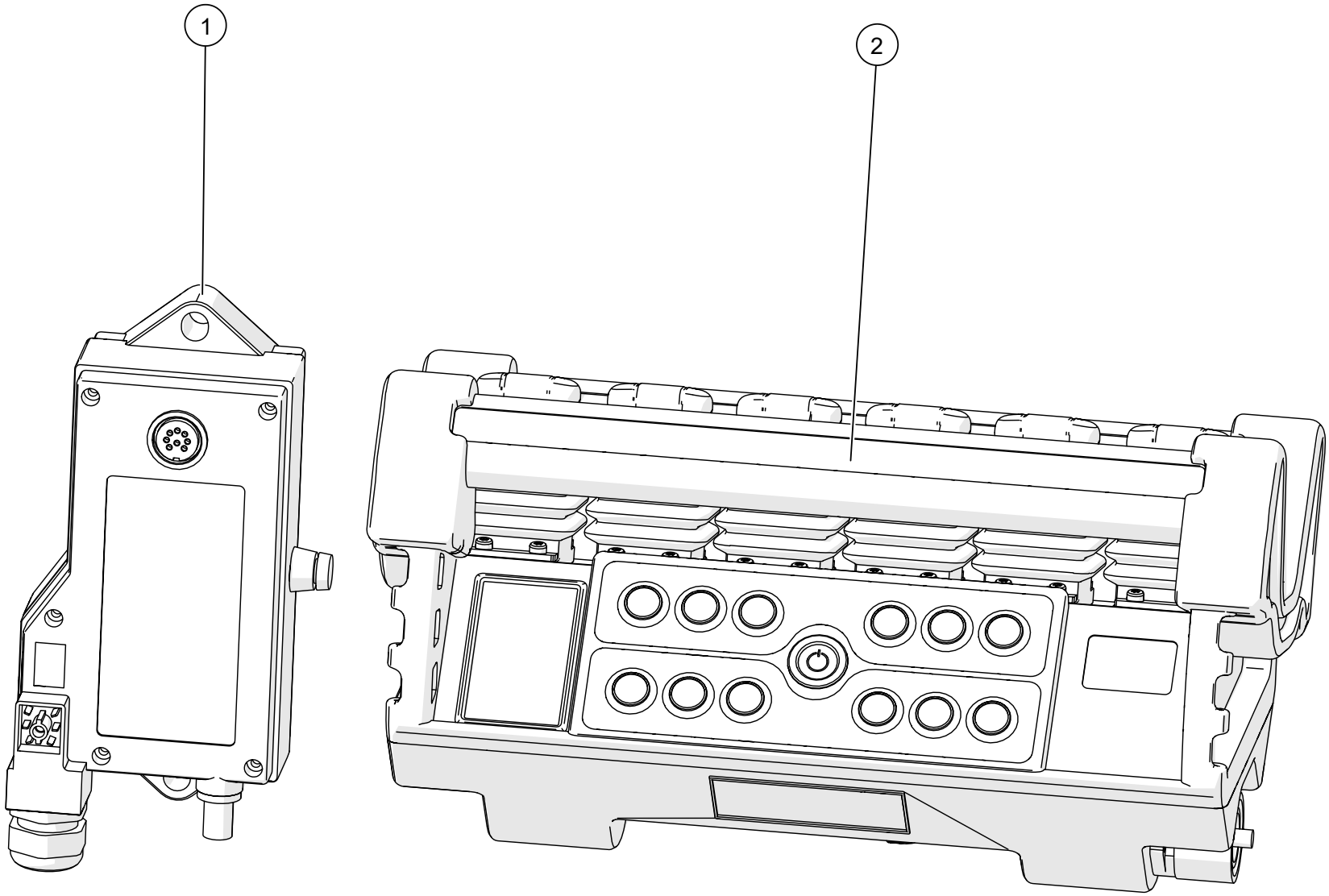

WHEN ORDERING PARTS, SPECIFY MODEL NUMBER, SERIAL NUMBER AND DESCRIPTION OF PARTS REQUIRED

BELLY PACK ONLY

ITEM	PART NUMBER	DESCRIPTION	QUANTITY	NOTES
	1025691	**BELLY PACK ONLY**		
1	1025393	NBB MB-R6 RECEIVER REPLACEMENT	1	
2	1025394	BELLY PACK	1	

WHEN ORDERING PARTS, SPECIFY MODEL NUMBER, SERIAL NUMBER AND DESCRIPTION OF PARTS REQUIRED

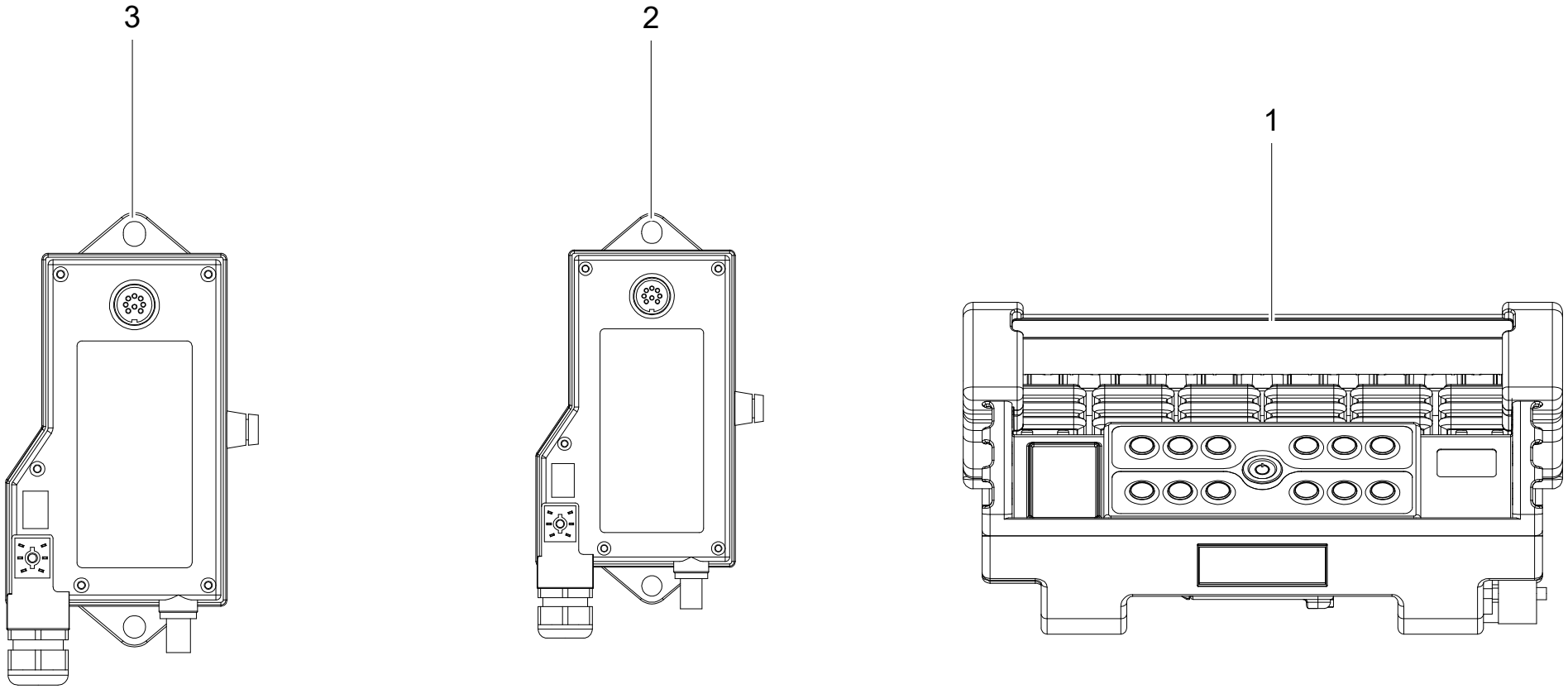

WHEN ORDERING PARTS, SPECIFY MODEL NUMBER, SERIAL NUMBER AND DESCRIPTION OF PARTS REQUIRED

BELLY PACK FOR LUFFING JIB

ITEM	PART NUMBER	DESCRIPTION	QUANTITY	NOTES
	1039645	**BELLY PACK FOR LUFFING JIB**		
1	1025394	BELLY PACK	1	
2	1025393	NBB MB-R6 RECEIVER	1	
3	1038639	NBB MB-R6 RECIEVER	1	

WHEN ORDERING PARTS, SPECIFY MODEL NUMBER, SERIAL NUMBER AND DESCRIPTION OF PARTS REQUIRED

CHAPTER NO. 4

PAINT & MARKING

PAGE INTENTIONALLY LEFT BLANK

NON - ILLUSTRATED PAGE

ITEM	PART NUMBER	DESCRIPTION	QUANTITY	NOTES
	1035231	**50-155 M & 50-155 U MARKING OPTIONS**		
1	**1034216**	50-155 M & 50-155 U BOOM DECAL KIT	1	SEE PAGE 355
2	**1041111**	50-155 M & 50-155 U CAB DECAL KIT	1	SEE PAGE 357
3	**1041350**	50-155 M & 50-155 U SUPER STRUCTURE DECAL KIT	1	SEE PAGE 359
4	T133983	PAINT AND MARKING CROSSOVER 4500L	1	

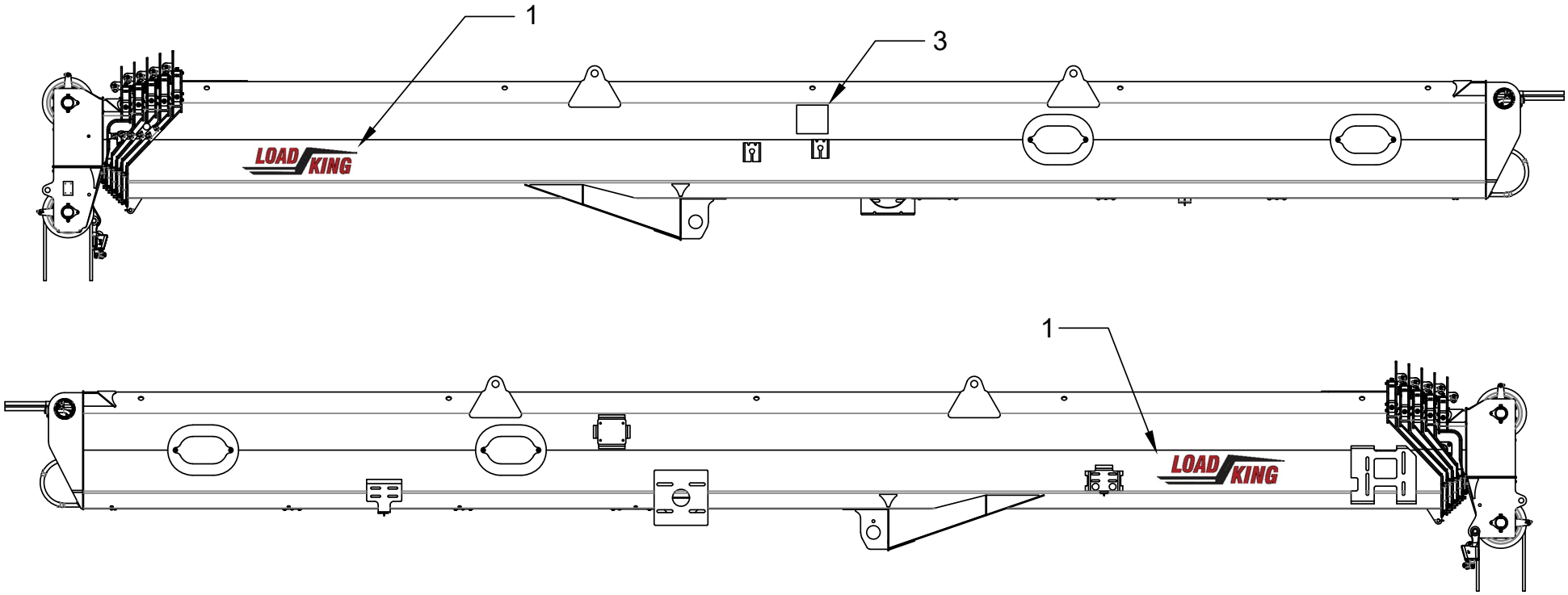

WHEN ORDERING PARTS, SPECIFY MODEL NUMBER, SERIAL NUMBER AND DESCRIPTION OF PARTS REQUIRED

ITEM	PART NUMBER	DESCRIPTION	QUANTITY	NOTES
	1034216	**50-155 M & 50-155 U BOOM DECAL KIT**		
1	1006866	DECAL, BOOM HEAD STRIPE	1	
2*	1026340	34 INCH TWO TONE LOAD KING DECAL	2	
3	1006843	BOOM ANGLE DECAL	1	
4*	1035002	DECAL, 50-155 M & 50-155 U JIB RETAINING PIN	1	

NOTE: *NOT SHOW IN THE ILLUSTRATION

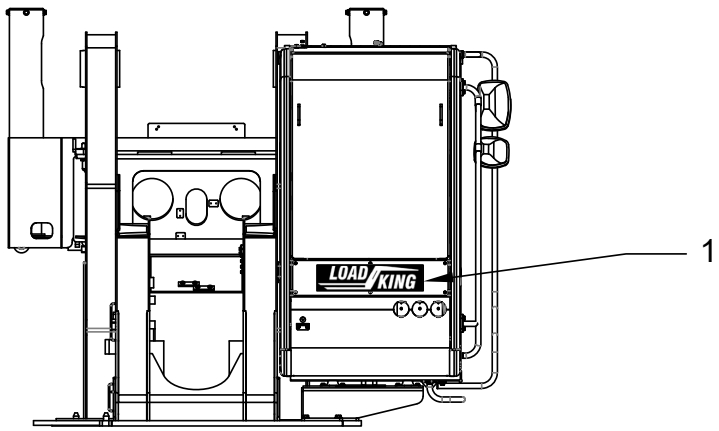

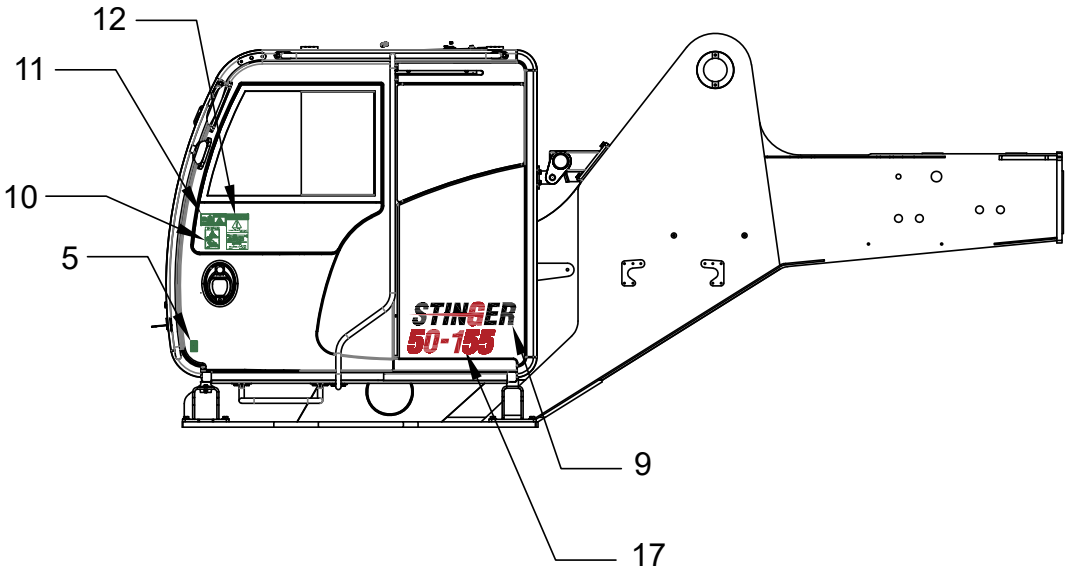

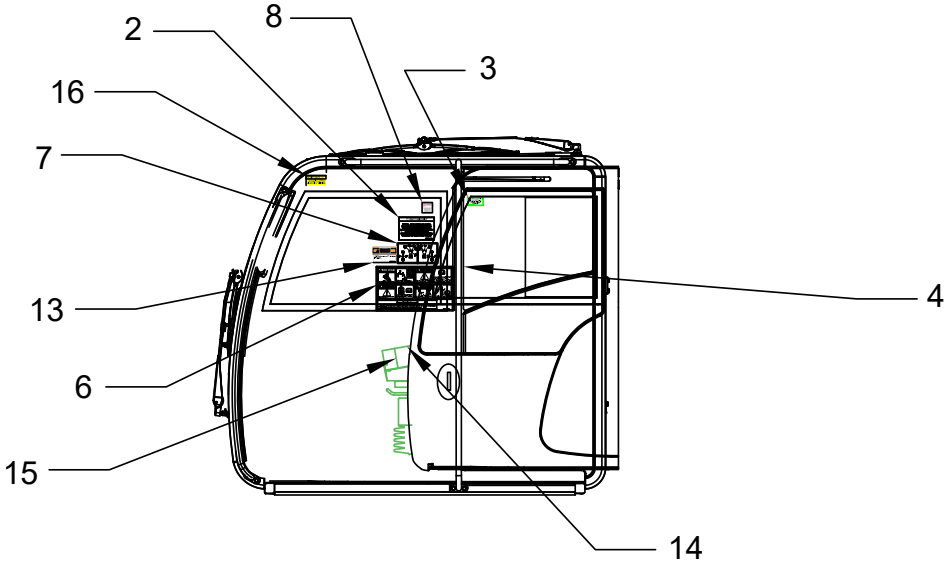

WHEN ORDERING PARTS, SPECIFY MODEL NUMBER, SERIAL NUMBER AND DESCRIPTION OF PARTS REQUIRED

ITEM	PART NUMBER	DESCRIPTION	QUANTITY	NOTES
	1041111	**50-155 M & 50-155 U CAB DECAL KIT**		
1	1008729	4 WHITE KING LOGO	1	
2	1006858	DECAL, PRODUCT REGISTRATION	1	
3	12260-843	DECAL, OPER. MANUAL	1	
4	T116286	DECAL, SEAT ARM	1	
5	12400-1003	DECAL FIRE EXTINGUISHER	1	
6	12400-1513	DECAL, WINDOW	1	
7	1035001	DECAL, JOY STICK CONTROLS	1	
8	CTOS-CIC	DECAL, PRODUCT SUPPORT	1	
9	1006824	STINGER DECAL	1	
10	T140864	DECAL, SEAT ARM, CLEAR BACKGROUND	1	
11	T140942	DECAL PERSONNEL LIFT	1	
12	1006845	NO RIDE IN UPPER CAB DECAL	1	
13	109049	DECAL BACK STABILITY	1	
14	T122870	DECAL, LEFTHAND ARMREST	1	
15	T144774	DECAL, SEAT ARM	1	
16	1006856	DECAL, WINDOW LATCH	1	
17	1041113	50-155 M & 50-155 U DECAL	1	

WHEN ORDERING PARTS, SPECIFY MODEL NUMBER, SERIAL NUMBER AND DESCRIPTION OF PARTS REQUIRED

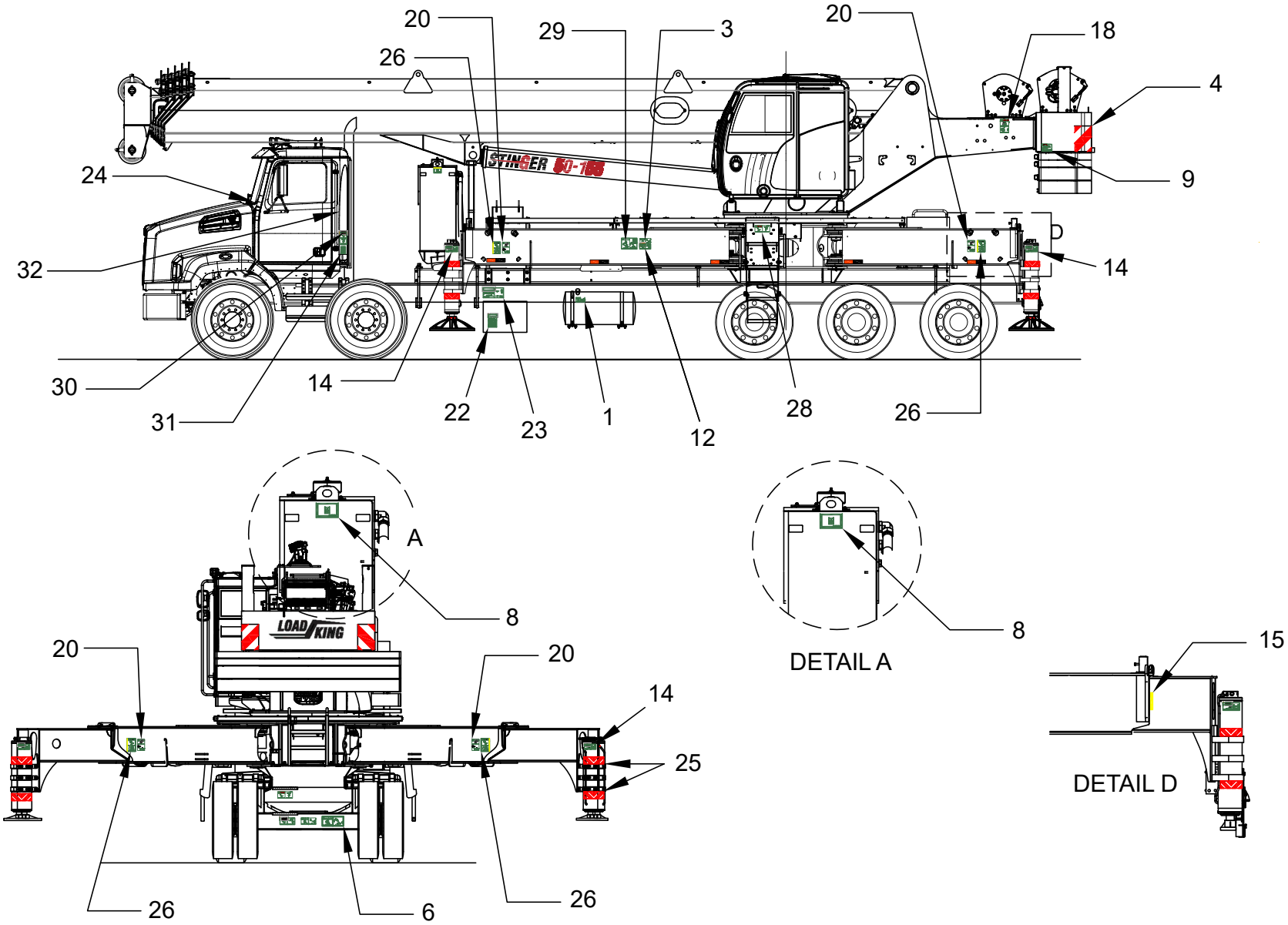

WHEN ORDERING PARTS, SPECIFY MODEL NUMBER, SERIAL NUMBER AND DESCRIPTION OF PARTS REQUIRED

ITEM	PART NUMBER	DESCRIPTION	QUANTITY	NOTES
	1041350	**50-155 M & 50-155 U SUPER STRUCTURE DECAL KIT**		
1	12400-1508	DECAL, DIESEL EXPLOSION/BURN	1	
2	T140607	DECAL, CRUSH HAZARD, STAY CLEAR LOAD	2	
3	T139673	DECAL, CRUSH HAZARD, STAY CLEAR LOAD (HORZ)	4	
4	1006863	DECAL, STRIPE	2	
5	1006865	DECAL, HOOK BLOCK	2	
6	T106560	DECAL, ELECTROCUTION HAZ PERSON	2	
7	651-00425	DECAL-BM/TURRET CRUSH HAZARD	1	
8	652-00073	DECAL HYDRAULIC OIL	2	
9	12400-1505	DECAL, TAILSWING	2	
10	12400-1503	DECAL, SKIN INJECTION HAZARD	1	
11	12400-981	DECAL, HYD. OIL LEVEL	1	
12	651-00415	NO RIDE BOOM/JIB/LOAD	4	
13	T134640	DECAL, C'WT LOWER	1	
14	12400-1514	DECAL, O/R CRUSH HAZARD	6	
15	714-0494-1	STRIPE, YELLOW	4	
16	1006842	DECAL-CTWT CRUSHING	1	
17	1008685	DECAL, FLAG	1	
18	651-00424	LOADLINE CRUSH HAZARD WINCH	2	

WHEN ORDERING PARTS, SPECIFY MODEL NUMBER, SERIAL NUMBER AND DESCRIPTION OF PARTS REQUIRED

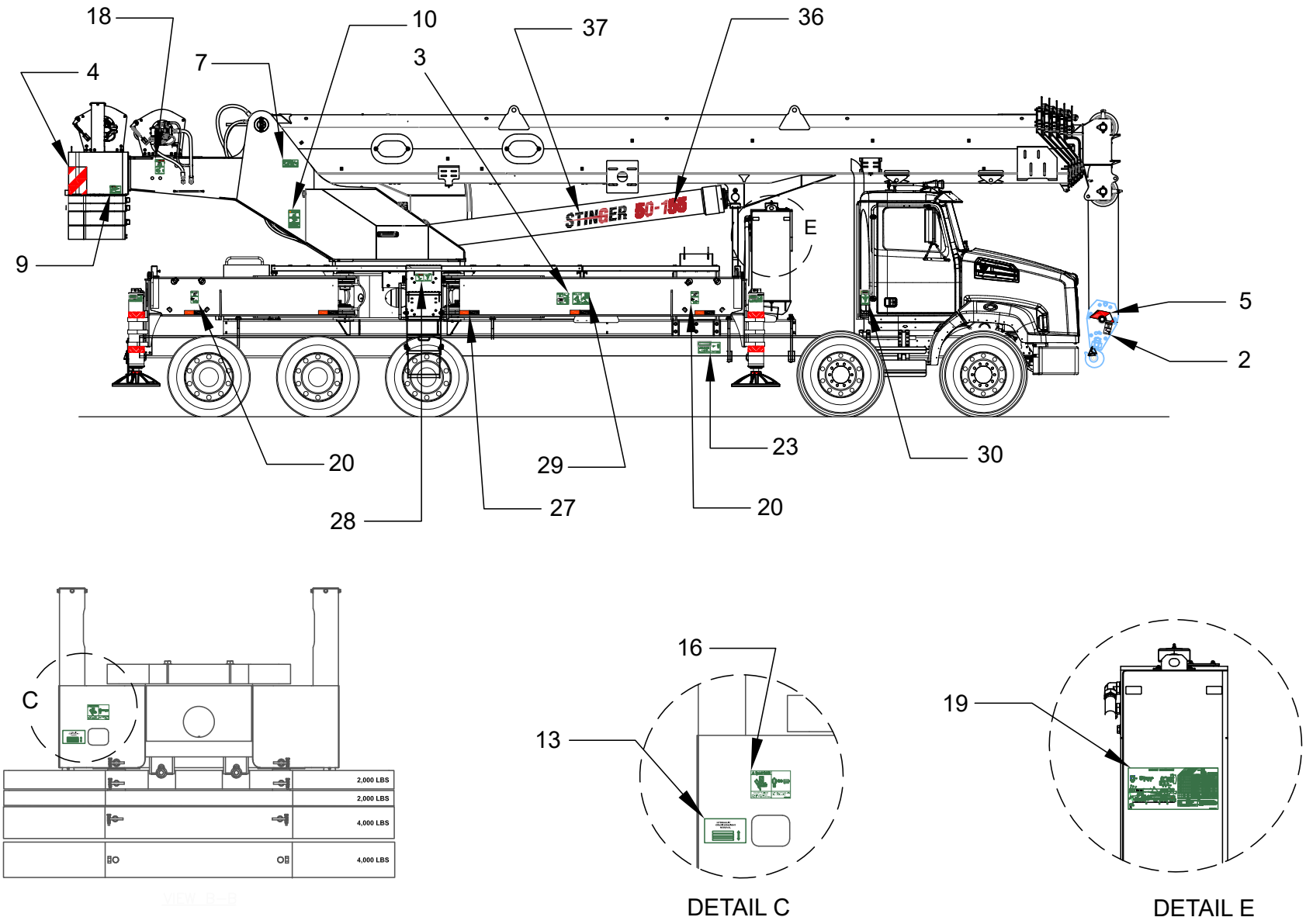

WHEN ORDERING PARTS, SPECIFY MODEL NUMBER, SERIAL NUMBER AND DESCRIPTION OF PARTS REQUIRED

ITEM	PART NUMBER	DESCRIPTION	QUANTITY	NOTES
	1041350	**50-155 M & 50-155 U SUPER STRUCTURE DECAL KIT**		
19	1041115	50-155 M & 50-155 U MAINTENANCE CHART DECAL	1	
20	T118961	DECAL, OUTRIGGER CRUSH-SWING	10	
21	1006862	CRANE HAND SIGNALS	1	
22	651-00473	DECAL, BATTERY DANGER	1	
23	1006841	DECAL, ENTAGLEMENT	2	
24	1006861	DECAL, BM EXT, AVOID DAM	1	
25	1006831	DECAL, JACK CYLINDER STRIPE	8	
26	1006834	DECAL, FALL HAZARD OUTRIGGER	8	
27	T137414	DECAL, CONSPICUTY	10	
28	12400-1516	DECAL, FALL HAZARD	4	
29	12400-1512	DECAL, ELECTROCUTION	2	
30	T141898	DECAL, FALL HAZARD	2	
31	12400-1003	DECAL FIRE EXTINGUISHER	1	
32	1008750	FINAL VEHICLE INSPECTION	1	
33	T105685	DECAL, HOOK BLOCK	2	
34	1040436	DRAIN PLUG ALIGNMENT	2	
35	1040536	PTO LUBE POINT DECAL	2	
36	1041114	50-155 M & 50-155 U LIFT CYLINDER DECAL	2	
37	1009092	STINGER DECAL LIFT CYLINDER	2	

WHEN ORDERING PARTS, SPECIFY MODEL NUMBER, SERIAL NUMBER AND DESCRIPTION OF PARTS REQUIRED

CHAPTER NO. 5

MANUALS

PAGE INTENTIONALLY LEFT BLANK

WHEN ORDERING PARTS, SPECIFY MODEL NUMBER, SERIAL NUMBER AND DESCRIPTION OF PARTS REQUIRED

ITEM	PART NUMBER	DESCRIPTION	QUANTITY	NOTES
		50-155 M & 50-155 U MANUAL PACKS OPTIONS		
1	**C1046139**	STINGER 50-155 M & U MANUAL PACK, ENGLISH	1	SEE PAGE 368
2	**C1046140**	STINGER 50-155 M & U MANUAL PACK, SPANISH	1	SEE PAGE 368
3	**C1046141**	STINGER 50-155 M & U MANUAL PACK, FRENCH	1	SEE PAGE 368

NON - ILLUSTRATED PAGE

ITEM	PART NUMBER	DESCRIPTION	QUANTITY	NOTES
	C1046139	**STINGER 50-155 M & U MANUAL PACK, ENGLISH**		
1	C1046142	50-155 M & U FLASHDRIVE- OPERATOR'S, PARTS, SHOP & SCHEMATICS, ENGLISH	1	
2	C1046145	STINGER 50-155 M & U PARTS MANUAL	1	
3	C1046146	STINGER 50-155 M & U OPERATOR'S MANUAL, ENGLISH	1	
	C1046140	**STINGER 50-155 M & U MANUAL PACK, SPANISH**		
1	C1046143	50-155 M & U & FLASHDRIVE- OPERATOR'S, PARTS, SHOP & SCHEMATICS, SPANISH	1	
2	C1046145	STINGER 50-155 M & U PARTS MANUAL	1	
3	C1046147	STINGER 50-155 M & U OPERATOR'S MANUAL, SPANISH	1	
	C1046141	**STINGER 50-155 M & U MANUAL PACK, FRENCH**		
1	C1046144	50-155 M & U FLASHDRIVE- OPERATOR'S, PARTS, SHOP & SCHEMATICS, FRENCH	1	
2	C1046145	STINGER 50-155 M & U PARTS MANUAL	1	
3	C1046148	STINGER 50-155 M & U OPERATOR'S MANUAL, FRENCH	1	

WHEN ORDERING PARTS, SPECIFY MODEL NUMBER, SERIAL NUMBER AND DESCRIPTION OF PARTS REQUIRED

CHAPTER NO. 6

RECOMMENDED SPARE PARTS

PAGE INTENTIONALLY LEFT BLANK

S.No.	Part no.	Description	Qty	Page
1	12400-1513	DECAL, WINDOW	1	22, 358
2	T135614-3360	SEAL, BULB	1	26
3	T135614-3845	SEAL, BULB	1	26
4	T120451	LIGHT, RED MODE	1	50
5	T120449	LIGHT, AMBER MODE	1	50
6	T120450	LIGHT, GREEN MODE	1	50
7	T106055	CABLE TIE,STUD MOUNT, 1/4-20	17	50, 156
8	T111783	LIGHT, FRONT	3	50, 322, 324
9	1004346	WEAR PAD ASM, FRONT UPPER LARGE	2	60
10	1004349	WEAR PAD ASM, FRONT UPPER SMALL	4	60
11	1004340	WEAR PAD, FRONT LOWER THICK	70	60
12	1004339	WEAR PAD, FRONT LOWER THIN	34	60
13	1032544	WEAR PAD ASM, FRONT UPPER SMALL	2	60
14	1004820	SHIM, WEAR PAD	4	64
15	1004809	SHIM, WEAR PAD	24	64
16	1004808	WEAR PAD, REAR LOWER	10	64
17	1004336	WEAR PAD, REAR UPPER SMALL	4	64
18	1004337	WEAR PAD, REAR UPPER LARGE	4	64
19	1004384	SHIM, WEAR PAD	2	66
20	1004385	SHIM, WEAR PAD	2	68
21	1041492	WEAR, TELE ROPES	4	70
22	1032414	WEAR PAD, CYLINDER HEAD SUPPORT	1	72
23	1004345	WEAR PAD, CYLINDER HEAD SUPPORT REAR	1	72
24	1004344	WEAR PAD, CYLINDER HEAD SUPPORT FRONT	1	72
25	1036226	WEAR, ANTI ROTATION	1	74
26	1036341	WEAR PAD	2	78
27	1036281	SHIM 1/8	6	78
28	1036280	SHIM, 1/16"	4	78
29	1036338	FRONT SIDE WEAR PAD	2	78

WHEN ORDERING PARTS, SPECIFY MODEL NUMBER, SERIAL NUMBER AND DESCRIPTION OF PARTS REQUIRED

S.No.	Part no.	Description	Qty	Page
30	1005430	HEAVY DUTY NEEDLE ROLLER BEARINGS	1	84, 86
31	1004396	BEARING, 3 1/2 SHAFT GREASELESS"	2	88
32	T140607	DECAL, CRUSH HAZARD, STAY CLEAR LOAD	2	122, 124, 126, 360
33	1032426	HARNESS UPPER	1	156
34	1223-770	LIGHT, TRIPLE IDENT, RED	1	156
35	1029842	WEAR, BOOM REST SIDE	2	184
36	230139	HARNESS & FUSE PANEL ASSEMBLY	1	198
37	228277	RELAY, 12V MICRO 280	5	198
38	228278	FUSE, MINI/ ATM 10 AMP	4	198
39	228279	FUSE, MINI/ ATM 20 AMP	2	198
40	T117939	WEAR PAD, 9.375 X 4.00 X .375	1	240, 242, 244, 246
41	T120619	TAIL LIGHT, MULTI FUNCTION	2	248
42	1008353	TEMP SENSOR	1	250
43	1008366	SENSOR, HYDRAULIC PRESSUR 6000 PSI	2	250
44	1034145	HARNESS, TAIL LIGHT	1	250
45	1032425	HARNESS LOWER	1	250
46	714A1432	ALARM, BACKUP/OR	1	250
47	T118879	SENSOR, INDUCTIVE	8	250
48	T120217	PROXIMITY SWITCH	4	250
49	T133237	HARNESS, REAR O/R SENSOR	2	250
50	T133823	HARNESS, FRONT O/R SENSOR	2	250
51	T165470	12V 3/4" RED SIDE MARKER LIGHT	2	250
52	T165471	12V 3/4" AMBER SIDE MARKER LIGHT	4	250
53	1026509	O-RING, AS568A-155	1	284, 288
54	1223-1026	SWITCH, BEACON	1	326, 328
55	420-4974	LIGHT, STROBE	1	326
56	T135443	LIGHT, REVOLVING, AMBER	1	328

WHEN ORDERING PARTS, SPECIFY MODEL NUMBER, SERIAL NUMBER AND DESCRIPTION OF PARTS REQUIRED

www.loadkingmfg.com

Load King
7701 Independence Ave, Kansas City, MO
64125
Parts: (816) 241- 8387
Service: (833) 281-7911
info@loadkingmfg.com

50-155 M & 50-155 U PARTS MANUAL

LOAD KING™
BY CUSTOM TRUCK (1) SOURCE