LOAD KING

CUSTOM TRUCK ONE SOURCE™



PARTS MANUAL

LOAD KING

480-126

REV A

SEPTEMBER 24, 2019

LOAD KING WARRANTY

Load King (herein after referred to as the COMPANY) warrants all products manufactured by it and purchased by you to be free from defects in material and manufacture at the time of shipment, for one (1) year from date of delivery. The COMPANY will furnish replacements for such parts as the COMPANY finds to have been defective at the time of delivery or, at the COMPANY's option, will make or authorize repairs to such parts, provided that, upon request, such parts are returned, transportation is prepaid to the factory from which they were shipped.

This warranty shall not apply to any Product which has been subjected to misuse, misapplication, overloading, neglect (including but not limited to use of unauthorized parts or attachments), adjustments or repair. Engines, motor, tires, wheels, suspensions, axles, etc. and any accessories furnished with or used in the COMPANY's products, but which are not manufactured by the COMPANY, are not warranted by the COMPANY but are sold only with the express warranty, if any, or the manufacturers thereof. This warranted is limited to the first purchaser/user and is not transferable.

THE FOREGOING IS IN LIEU OF ALL OTHER WARRANTIES, WHETHER EXPRESSED OR IMPLIED (INCLUDING, WITHOUT LIMITATIONS, OF MERCHANTABILITY AND FITNESS OF ANY PRODUCT FOR A PARTICULAR PURPOSE), AND OF ANY OTHER OBLIGATION OR LIABILITY ON THE PART OF THE COMPANY. THERE ARE NO WARRANTIES WHICH EXTEND BEYOND THE DESCRIPTION OF THE FACE THEREOF.

LIMITATION OF LIABILITY

It is expressly understood and agreed by you that the COMPANY's liability for its products, whether due to breach of warranty, or otherwise is limited to the furnishing of such replacement parts, F.O.B. factory, and the COMPANY will not be liable for any other injury, loss, damage, or expense, whether direct or consequential, including but not limited to loss of use, income, profit, or production, injury to person or increase in cost of operation, spoilage of or damage to material, arising out of or in connection with the sale, installation, use or inability to use, or the repair or replacement of the COMPANY's products.

All used vehicles and/or bodies are sold in the "AS IS" condition and no expressed or implied warranty is made.

All of COMPANY'S Products are of high quality and are manufactured in conformity with the best commercial practices in the various lines. The COMPANY guarantees all Products manufactured by it to be free from defects in material and manufactured at the time of shipment, for one (1) year from date of delivery. In addition, the COMPANY guarantees the portion of the product to be considered structural for one (1) year from date of manufacture.

While Load King, LLC. designs and manufactures its specific equipment configurations to industry standards, it is ultimate responsibility of the buyer/operator to assure that all loads are properly loaded and distributed. All loads must comply with the applicable state and federal load limits.

INSTRUCTIONS FOR ORDERING PARTS

When ordering parts, contact your nearest Load King distributor and give the following information to assure prompt service:



MACHINE IDENTIFICATION:

State the model and Product Identification Number (PIN), located on the plate in the Operator's Cab.

The six digit serial number is shown on a plate on the outside front of the operator's cab for convenient access.



PART IDENTIFICATION:

State the part number, description and quantity required. Do not use the item number. Avoid using the words "Pairs" or "Sets".

REF	PART.NO.	DESCRIPTION	
	T139803	Mirror, Convex	1

SHIPPING INSTRUCTIONS:

State the invoicing address. Unless otherwise specified, invoices will be mailed to the shipping address.

State the correct shipping address and the means of shipment: parcel post, air mail, air freight, UPS, bus, etc.

Load King
7701 Independence Ave, Kansas City, MO 64125
Parts: (816) 241- 8387
Service: (833) 281-7911
info@loadkingmfg.com

USING THIS PARTS BOOK

This Parts Manual has been designed for optimum ease of reading and is the key to Customer-Distributor-Factory communication. Genuine replacement parts, along with interchangeable product improvements as they become available, will keep your machine in a reliable and productive condition.

The following instructions describe the features of the manual and how to use it effectively.

Use this manual also as a supplement to the Operator's Manual and Maintenance Manual when performing service procedures on the machine.



IMPORTANT

This manual lists serviceable parts for **EVERY** machine built of this model designation. Serial numbers are used to identify parts when a product improvement is made or an alternate component is used. **KNOW THE SERIAL NUMBER OF YOUR MACHINE** before searching for replacement parts.

The **PARTS CHAPTER INDEX** shows the functional arrangement of associated parts for the machine. A chapter number identifies the same chapter of parts regardless of model (Chapter 2 is always the Lower Structure). The chapters which apply to the machine are listed in numerical order.

PAGE NUMBERS are in numerical sequence within each parts chapter.

EXPLODED VIEW ILLUSTRATIONS show the relationship of assembled parts. The illustrations are keyed to an accompanying parts list on the same page or on the facing page and are positioned for ease in reading the manual.

LOCATING INDIVIDUAL PARTS

1. Turn to the PARTS CHAPTER INDEX and find the general area of the part in question. (Example: Seat would be found in “Operator’s Cab” chapter 1).

2. Refer to the parts chapter and check to see if a subsequent letter-designated chapter is used. Check the title block on the pages to determine the application of the chapter to your particular machine.

ENGINE	2

FILTER	5

3. Major assemblies are shown at the beginning of each chapter with page references to component parts breakdowns on the pages which follow. Briefly skim through the chapter to familiarize yourself with the information included in it. Locate the illustration and parts list which pertain to the assembly or part you desire. Compare the serial number of your machine to those which may appear on the page to be sure you are ordering the correct part.

4. Item numbers on the illustration correspond to those in the parts list. Parts not shown with an item number are the same as identical or symmetrical parts with an item number. Parts keyed with an asterisk or other symbol are included in a repair kit. If no part number is shown, these parts cannot be ordered separately.

5. Quantities are shown as required per component assembly unless otherwise noted.

6. If an assembly is listed without any serviceable parts, it must be ordered complete. Serviceable parts of components are listed under the component part or a subsequent page as indicated.

7. All hardware shown without the size listed after the noun name is specially made for the particular application and must not be substituted with standard hardware.

PARTS GROUPS

480-126: TABLE OF CONTENTS

Chapter	Description	Page
1	**480-126-2017 UPPER STRUCTURE**	**17**
	SUPERSTRUCTURE ASSEMBLY	21
	CAB MOUNT ASSEMBLY	25
	SWING LOCK ASSEMBLY	27
	HOUSE LOCK ASSEMBLY	29
	SWING BRAKE ASSEMBLY (BRADEN)	31
	UPPER HYDRAULIC ASSEMBLY	34
	SWING VALVE	40
	BOOM/TELE VALVE	41
	VALVE, WINCH	42
	MAIN WINCH ASSEMBLY (BRADEN)	43
	WINCH ASSEMBLY (BRADEN)	45
	WINCH MOTOR (BRADEN)	48
	WINCH MOTOR (9 PISTON REXROTH) (BRADEN)	50
	SWIVEL ASSEMBLY	52
	HOIST CYLINDER (HENGLI)	55
	UPPER CAB ASSEMBLY, 2017	57
	OPERATOR'S CAB (UPPER) (EXPORT & DOMESTIC)	61
	OPERATOR'S CAB DOOR	63
	OPERATOR'S CAB (UPPER) - SECTION 2	65
	OPERATOR'S CAB (UPPER) - SECTION 3	67
	OPERATOR'S CAB (UPPER) - SECTION 4	69
	FRONT WIPER/WASHER ASSEMBLY - SECTION 5	71
	CAB ROOF WIPER ASSEMBLY - SECTION 6	73
	OPERATOR'S CAB (FRONT WINDSHIELD - SECTION 7)	75
	OPERATOR'S CAB (ROOF HATCH - SECTION 8)	77
	UPPER DASH ASSEMBLY, 2017	79
	SEAT, UPPER	82
	THROTTLE CONTROLS UPPER	84
	SWING BRAKE CONTROL	86
	DEFROSTER ASSEMBLY	88
	BOOM ASSEMBLY-126FT	89
	126' BOOM EXTEND CYLINDER	96
	SHEAVE W/ BUSHING	98
	SHEAVE W/ BUSHING	99
	SHEAVE BUSHING ASSEMBLY	100
	SHEAVE BUSHING ASSEMBLY	101
	SHEAVE ASSEMBLY	102
	JIB ASSEMBLY OPTIONS	103
	JIB ASSEMBLY 33' - 57'	105

Released: AUGUST 2018

PARTS GROUPS

480-126: TABLE OF CONTENTS

Chapter	Description	Page
	ANTI-TWO BLOCK ASSEMBLY-JIBS	109
	JIB STOWAGE ASSEMBLY	111
	SHEAVE ASSEMBLY, 3/4 WIRE ROPE	113
	OFFSETTABLE JIB ASSEMBLY 32’	114
	COUNTERWIGHT OPTIONS	117
	COUNTERWEIGHT W/O AUX WINCH 16,000LB	119
	COUNTERWEIGHT W/ AUX WINCH, 15,000LB	120
	CYLINDER COUNTERWEIGHT	122
	COUNTERWEIGHT MOUNT ASSEMBLY	124
	COUNTERWEIGHT W/O AUX WINCH 4550LB	125
	COUNTERWEIGHT W/AUX WINCH 3000#	126
	COUNTERWEIGHT MOUNT ASSEMBLY	128
	FRONT COUNTERWEIGHT ASSEMBLY	129
	HOOK BLOCK, OVERHAUL BALL & WIRE ROPE	130
	HOOK BLOCK ASSEMBLY 5 SHEAVE, 80T, 3/4 IN	132
	HOOK BLOCK ASSY, 5 SHEAVE, 80TON, 3/4"	134
	HOOK BLOCK ASSEMBLY 5 SHEAVE, 75 TONS	136
	HOOK BLOCK 5 SHEAVE, 75 TONS, 3/4"	137
	HOOK BLOCK ASSEMBLY 5 SHEAVE, 60 TONS	139
	HOOK BLOCK 5 SHEAVE, 60 TONS, 3/4"	140
	HOOK BLOCK ASSEMBLY 4 SHEAVE, 45 TONS	142
	HOOK BLOCK ASSEMBLY 4 SHEAVE, 45 TONS, 3/4"	143
	OVERHAUL BALL #419 / 12 TONS / 3/4”	145
	WIRE ROPE & REEVING, RESIT CABLE	147
	WIRE ROPE & REEVING, STD CABLE	149
	5 SHEAVE BOOM HEAD ASSEMBLY	151
	A/C & HEATER OPTIONS	152
	HYDRAULIC A/C & L.P. HEATER OPERATOR CAB	154
	HEATER ASSEMBLY, SUBURBAN	157
	L.P BRACKET KIT	159
	THERMOSTAT ASSEMBLY OPERATOR CAB	160
	BLOWER SYSTEM, KENWAY	161
	ASSEMBLY, EVAP COIL (CARRIER CAB)	163
	OUTSIDE AIR KIT (CARRIER CAB)	164
	HYDRAULIC A/C UNIT KENWAY	166
	HOSES & MOUNTING KIT KENWAY	168
	HOSE ASSEMBLY EVAPORATOR TO COMPRESSOR (OPERATOR CAB)	170
	HOSE ASSEMBLY DRIER TO EVAPORATOR (OPERATOR CAB)	171
	HOSE ASSEMBLY - 6 HYD CASE DRAIN	172
	KIT, MD 9037/47/57 MTG	173
	DELUXE A/C & FLAMELESS HEAT OPERATOR CAB	174
	CAB ASSEMBLY KIT, KENWAY OPERATOR CAB	176

Released: AUGUST 2018

PARTS GROUPS

480-126: TABLE OF CONTENTS

Chapter	Description	Page
	BLOWER ASSEMBLY, AC & HEAT	177
	GROUP, EVAPORATOR COIL (CARRIER CAB)	179
	GROUP, COVER	180
	SHELF ASSEMBLY	181
	FUSE PANEL ASSEMBLY, HB9	183
	HYDRAULIC DRIVE UNIT, KENWAY, OPERATOR CAB	184
	MOTOR ASSEMBLY, 1.59 9067 AOH	187
	ASSEMBLY, BELT TENSIONER	188
	PUMP/BLOCK ASSEMBLY MD9067 12V	189
	ASSEMBLY, HEAT MANIFOLD	191
	ASSEMBLY, RETURN BLOCK	193
	ASSEMBLY, OIL LEVEL SENSOR BLOCK	194
	CONDENSER ASSEMBLY	195
	HOSE & DRIVE MTG KIT KENWAY, OPERATOR CAB	197
	NO HEATER - INCLUDES COVER	199
	RCL ASSEMBLY (ELEMENT II DISPLAY)	200
	GREER RCL 510 REEL	202
	COMPUTER W/DATA RECORDER	204
	HORN ASSEMBLY, RCL	205
	SINGLE LEVER-DUEL AXIS JOYSTICKS CONTROL	207
	CONTROL MODULE	208
	RIGHT ARM ASSEMBLY DOUBLE - AXIS	209
	LEFT ARM ASSEMBLY DOUBLE - AXIS	211
	DUAL LEVER-SINGLE AXIS JOYSTICKS CONTROL	213
	RIGHT ARM ASSEMBLY SINGLE AXIS	216
	LEFT ARM ASSEMBLY SINGLE AXIS	218
	COLLECTOR RING 38 PASS	220
	SLIP RING, 38 CIRCUIT	222
	BOOM ANGLE INDICATOR	223
2	**480-126-2017 LOWER STRUCTURE**	**224**
	FRAME/BEARING/ANTI-SLIP TAPE ASSEMBLY	229
	ANTI - SLIP TAPE ASSEMBLY	230
	UPPER STEEL KIT	231
	DECKING & HOUSING ASSEMBLY	232
	HOUSING, ENGINE, ASSEMBLY	234
	DOOR, SLIDING ASSEMBLY	236
	DECKING ASSEMBLY, T 7-2017	238
	OUTRIGGER ASSEMBLY	240
	OUTRIGGER BEAM ASSEMBLY (REAR)	242
	CYLINDER, OUTRIGGER, UPPER FISHER HYD - (REAR)	244

Released: AUGUST 2018

PARTS GROUPS

480-126: TABLE OF CONTENTS

Chapter	Description	Page
	OUTRIGGER JACK CYLINDER GREAT BEND - (REAR)	246
	LOWER OUTRIGGER CYLINDER (FISHER HYDRAULICS)	248
	OUTRIGGER BEAM ASSEMBLY (FRONT)	250
	OUTRIGGER JACK CYLINDER SEABEE - (FRONT)	252
	FRONT JACK ASSEMBLY	254
	FRONT JACK PAD	256
	OUTRIGGER JACK CYLINDER (HENGLI)	257
	OUTRIGGER SENSOR ASSEMBLY	259
	T7-2017 ENGINE OPTIONS	260
	ENGINE, T 7-2017 ROW	261
	REAR SUSPENSION ASSEMBLY	262
	LOWER SUSPENSION KIT	266
	AIR/RESTRAINT ASSEMBLY	268
	RESTRAINT STRAP KIT	270
	AIR/RESTRAINT STRAP KIT	271
	DRIVE SHAFT INTER - AXLE	273
	BEAM KIT 54"	275
	AXLE, FORWARD REAR	276
	AXLE, RWD REAR	280
	T5/T7 ENGINE INSTALLATION, OM460, 2017	282
	ENGINE ASSEMBLY - EXPORT 460HP, MERCEDES-BENZ ENGINE	284
	BLOCK HEATER ASSEMBLY, 240V	288
	TRANSMISSION-EATON-FULLER (AUTO SHIFT)	289
	CASE (FRONT) (TRANSMISSION)	291
	CASE (AUXILIARY) (TRANSMISSION)	293
	SHIFT BAR HOUSING (TRANSMISSION)	295
	AUXILIARY DRIVE GEAR (TRANSMISSION)	297
	INPUT SHAFT & DRIVE GEAR (TRANSMISSION)	298
	REVERSE IDLER (TRANSMISSION)	300
	COUNTERSHAFT & BEARINGS (AUX) (TRANSMISSION)	301
	COUNTERSHAFT ASSEMBLY (TRANSMISSION)	302
	MAINSHAFT & SYNCHRO (AUX) (TRANSMISSION)	304
	MAINSHAFT ASSEMBLY (TRANSMISSION)	306
	COMBINATION CYLINDER (TRANSMISSION)	308
	OIL FILTER (TRANSMISSION)	310
	INTEGRAL OIL PUMP (TRANSMISSION)	312
	FILTER REGULATOR (TRANSMISSION)	314
	CONTROLLER ECU & HARNESS (TRANSMISSION)	315
	ELECTRIC CLUTCH ACTUATOR (TRANSMISSION)	316
	HEAT EXCHANGER (TRANSMISSION)	317
	SHIFT CONSOLE (TRANSMISSION)	319
	X-Y SHIFTER MODULE (TRANSMISSION)	321

Released: AUGUST 2018

PARTS GROUPS

480-126: TABLE OF CONTENTS

Chapter	Description	Page
	KITS & ASSEMBLIES (TRANSMISSION)	322
	PUMP/PTO ASSEMBLY	323
	KIT, SPLIT FLANGE, C61-32	325
	PUMP, HYDRAULIC	326
	PTO, 8 BOLT	328
	PTO, 6 BOLT	330
	COOLING ASSEMBLY MB460	332
	RADIATOR, MB460	335
	ASSEMBLY, WATER LEVEL SENSOR	337
	KIT, AC SYSTEM MB460 (EXPORT)	338
	SYS, BLOWER W/WATER VALVE	339
	BLOWER UNIT VW7 2AH (CARRIER CAB)	340
	ASSEMBLY, BLOWER 12V (CARRIER CAB)	342
	KIT, ELECT WTR VLV (CARRIER CAB)	343
	KIT, ENGINE HVAC MB460 (EXPORT)	344
	TRANSMISSION FILTER ASSEMBLY (EXPORT & DOMESTIC)	346
	MOUNTING, EXPORT ENGINE	348
	AIR INTAKE ASSEMBLY, GP-460	350
	LOWER CAB ASSEMBLY, MB460, 2017 (EXPORT)	352
	CAB LOWER (EXPORT & DOMESTIC)	355
	CAB LOWER DOOR (EXPORT & DOMESTIC)	357
	CAB LOWER	359
	CAB LOWER	361
	CAB LOWER	363
	LOWER DASH ASSEMBLY, OM460, 2017 (EXPORT)	365
	CIRCUIT BREAKER PANEL LOWER (EXPORT)	368
	BRAKE ASSEMBLY	369
	FUEL GP-MB460 T5 T7	371
	EXHAUST ASSEMBLY GP-460	373
	ENGINE, T 7-2017 USA	375
	FUEL ASSEMBLY, DD13, GHG17	376
	AFTERTREATMENT ASSEMBLY	378
	AIR INTAKE ASSEMBLY-DD13	382
	GRILL, FRONT	384
	LOWER CAB ASSEMBLY, DD13 (DOMESTIC)	385
	LOWER DASH ASSEMBLY DD13 GHG'17 (DOMESTIC)	389
	PANEL LOWER DASH 2017	392
	CIRCUIT BREAKER PANEL LOWER (DOMESTIC)	393
	STEERING WHEEL	394
	ELECTRIC THROTTLE PEDAL INSTALLATION (CUMMINS)	395
	REAR SUSPENSION ASSEMBLY, 480-126-2017	396
	T5/T7 ENGINE INSTALLATION DD13 GHG17	400

Released: AUGUST 2018

PARTS GROUPS

480-126: TABLE OF CONTENTS

Chapter	Description	Page
	KIT, AC SYSTEM (DOMESTIC)	402
	KIT, ENGINE HVAC DD13 (DOMESTIC)	403
	MOUNTING, ENGINE ASSEMBLY	405
	COOLING ASSEMBLY, DD13, GHG17	407
	T5/T7 ENGINE GP-DD13 GHG17	410
	WHEELS & TIRES (FRONT & REAR)	414
	WHEELS & TIRES, FRONT	415
	WHEELS & TIRES, REAR	416
	WHEELS & TIRES, REAR	417
	WHEEL & TIRE ASSEMBLY (INSIDE)	418
	AIR COMPONENTS ASSEMBLY, 2017	419
	AIR ASSEMBLY, BOOM DOLLY	425
	SWING BEARING ASSEMBLY	427
	KIT, SWING BEARING ASSEMBLY	428
	LOWER HYDRAULIC ASSEMBLY (EXPORT & DOMESTIC)	429
	CLAMP, C61-16, KIT	436
	OUTRIGGER VALVE	437
	BODY & SPOOL ASSEMBLY, O/R VALVE	438
	OUTRIGGER EXTEND-RETRACT VALVE	440
	HYDRAULIC TANK ASSEMBLY	441
	DIVERTER VALVE	443
	OIL COOLER ASSEMBLY	444
	OIL COOLER	446
	LOWER ELECTRICAL GP, T 7-2017	447
	FRONT SUSPENSION ASSEMBLY	449
	STEERING GEAR MASTER	451
	STEERING GEAR SLAVE	454
	AIR SUSPENSION KIT	456
	STEERING PIVOT ASSEMBLY	458
	BEAM ASSEMBLY 52.00	459
	AXLE, FRONT STEER	460
	BRAKE ASSEMBLY (LH), FRONT AXLE	462
	BRAKE ASSEMBLY (RH), FRONT AXLE	464
	WHEEL END KIT	466
	AXLE, REAR STEER	467
	BRAKE ASSEMBLY (LH), REAR AXLE	469
	BRAKE ASSEMBLY (RH), REAR AXLE	471
	DRIVE SHAFT ASSEMBLY	473
	PUMP, HYDRAULIC	475
	PTO SHAFT 1410	477
	YOKE 1410	478
	BOOM RACK ASSEMBLY	479

Released: AUGUST 2018

PARTS GROUPS

480-126: TABLE OF CONTENTS

Chapter	Description	Page
	OUTRIGGER PAD ASSEMBLY	480
3	**OPTIONAL EQUIPMENT**	**481**
	PINTLE HOOK ASSEMBLY	485
	WORK LIGHT PACKAGE	486
	STROBE LIGHT, YELLOW	488
	REVOLVING AMBER LIGHT	489
	360° SPOT LIGHT	490
	AUXILIARY WINCH ASSEMBLY (BRADEN)	491
	AUX SHEAVE ASSEMBLY	494
	ANTI-TWO AUXILIARY SHEAVE	496
	SHEAVE ASSEMBLY, 0.75 DIA ROPE	497
	3RD WRAP INDICATOR (MAIN/AUX WINCH)	498
	KIT, WINCH ROLLER (BRADEN)	499
	KIT, TIRE INFLATION	501
	AIR HOSE ASSEMBLY	503
	WIND SPEED SENSOR	504
	TIE DOWN ASSEMBLY	505
	EMERGENCY AIR SHUTOFF KIT	506
	AIR SHUTOFF SETUP	507
	AIR SHUTOFF ELECTRICAL ASSEMBLY	509
	SWITCH, REVGUARD SPEED	510
	COLD START OPTIONS	511
	IMMERSION HEATER, HYDRAULIC OIL	512
	REMOTE DRIVE ASSEMBLY	513
	AIR ASSEMBLY, REMOTE DRIVE	514
	49 PASS COLLECTOR RING	515
	SLIP RING, 49 CIRCUIT	517
	PNEUMATIC SWIVEL	518
	REMOTE STEER, UPPER ASSEMBLY, 2017	520
	REMOTE STEER, LOWER ASSEMBLY, 2017	522
	KIT, REMOTE STEERING, 2017	524
	REMOTE STEERING ACTUATOR ASSEMBLY	525
	ASSEMBLY, REMOTE STEER MOTOR, 2017	527
	STEERING SHAFT ASSEMBLY	528
	BOOM DOLLY ASSEMBLY	529
	BOOM DOLLY	530
	BOOM DOLLY SUSPENSION	532
	BOOM DOLLY HYDRAULIC ASSEMBLY	534
	LIGHT BAR ASSEMBLY	536
	REMOTE OUTRIGGER ASSEMBLY	538

Released: AUGUST 2018

PARTS GROUPS

480-126: TABLE OF CONTENTS

Chapter	Description	Page
	WHEEL & TIRE ASSEMBLY, FRONT	539
	WHEEL & TIRE ASSEMBLY, REAR	540
4	**PAINT & MARKING**	**541**
	PAINT & MARKING	545
	PAINT & MARKING	548
	ISO DECAL ASSEMBLY	551
	LOWER CAB DECALS (W/ SUPPLIER CAB) (EXPORT & DOMESTIC)	553
	UPPER CAB DECALS (W/ SUPPLIER CAB)	554
	126′ BOOM MARKING DECAL (ENGLISH)	555
	126′ BOOM MARKING DECAL (METRIC)	556
	EMISSIONS DECAL INSTALLATION, TIER 3	557
5	**FILTERS**	**558**
	FILTER SPECIFICATIONS EXPORT	562
	FILTER SPECIFICATIONS DOMESTIC	565
6	**MANUALS**	**567**
	MANUAL PACK-ENGLISH	570
	MANUAL PACK-SPANISH-LA	571
	MANUAL PACK-FRENCH-CA	572
	MANUAL PACK-PORTUGUESE-BR	573
7	**RECOMMENDED SPARE PARTS**	**574**

CHAPTER NO. 1

480-126-2017 UPPER STRUCTURE

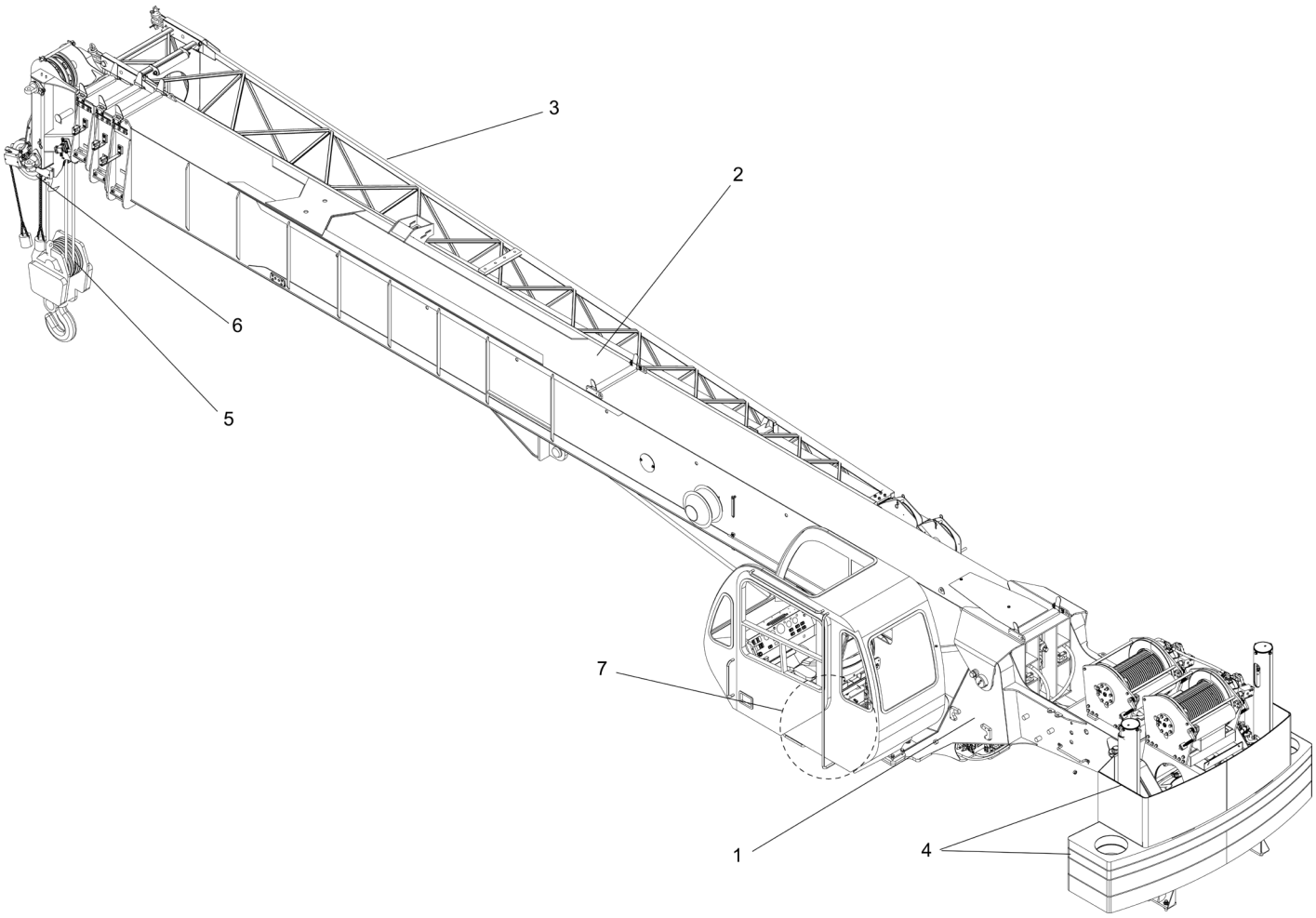

WHEN ORDERING PARTS, SPECIFY MODEL NUMBER, SERIAL NUMBER AND DESCRIPTION OF PARTS REQUIRED

REF	PART NO.	DESCRIPTION	QTY
	480-126-2017-UPR-STR* (Rev. 00)	*480-126-2017 UPPER STRUCTURE*	
1	**T157321**	Superstructure Assembly (see page 21)	1
2	**721A0025**	Boom Assembly, 126FT (see page 89)	1
3	**480-126-2017-JIB ASSY***	Jib Assembly Options (see page 103)	REF
4	**480-126-2017-CTWT***	Counterweight Options (see page 117)	REF
5	**480-126-2017-HK/LD BALLS & ROPE***	Hook Block & Wire Rope Options (see page 130)	REF
6	**721A0242-2**	6 Sheave Assembly, Nylon (see page 151)	1
7	**480-126-2017-HEATER &**	Upper Cab Climate Control Options (see page 152)	REF
8**	**AC* T122123**	RCL Assembly (see page 200)	1
9**	**719A0920**	Single Lever-Duel Axis Joysticks Control (see page 207)	1
10**	**719A0921**	Dual Lever-Single Axis Joysticks Control (see page 213)	1
11**	**T122390**	38 Pass COLL Ring Assembly (see page 220)	1
12**	**710A0644**	Boom Angle Indicator Assembly (see page 223)	1

* NOT PURCHASABLE AT THIS LEVEL
** ITEM NOT SHOWN IN ILLUSTRATION

WHEN ORDERING PARTS, SPECIFY MODEL NUMBER, SERIAL NUMBER AND DESCRIPTION OF PARTS REQUIRED

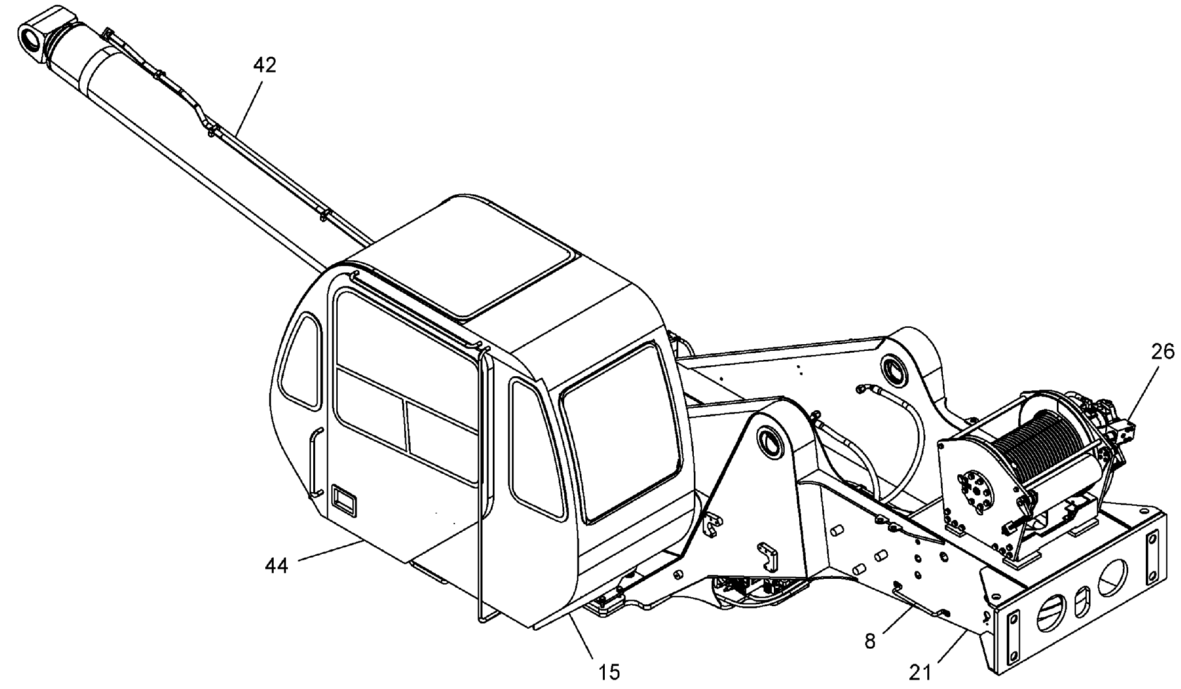

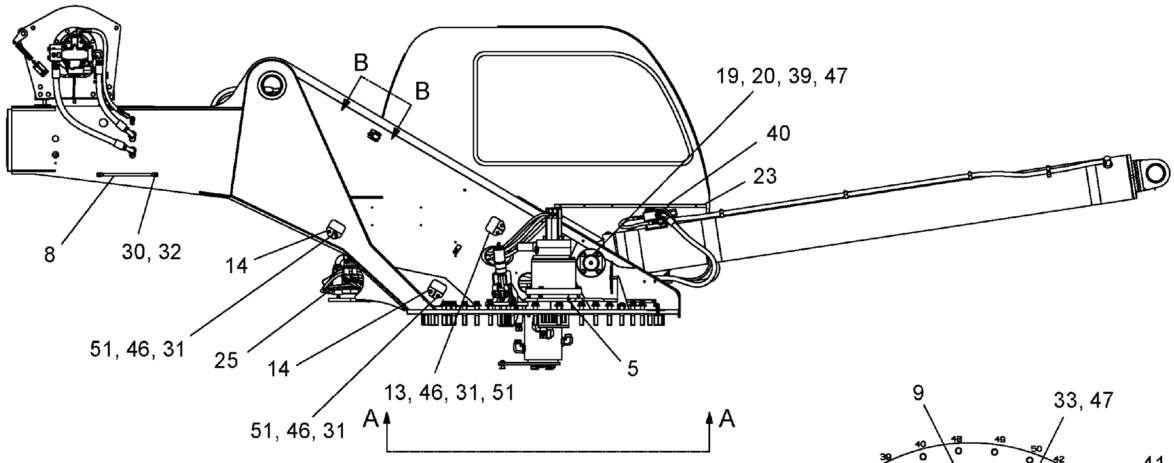

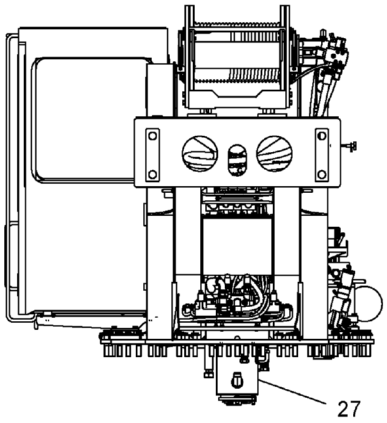

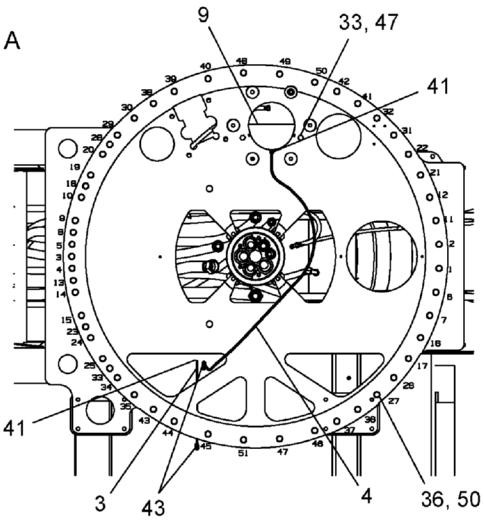

VIEW A - A

WHEN ORDERING PARTS, SPECIFY MODEL NUMBER, SERIAL NUMBER AND DESCRIPTION OF PARTS REQUIRED

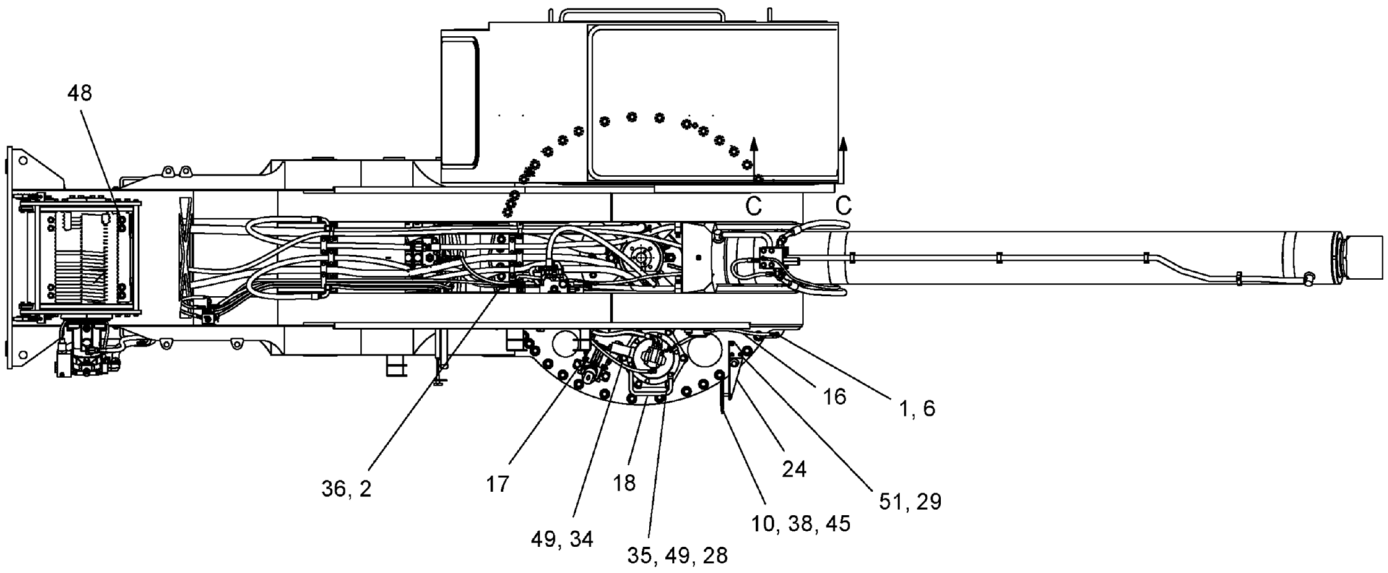

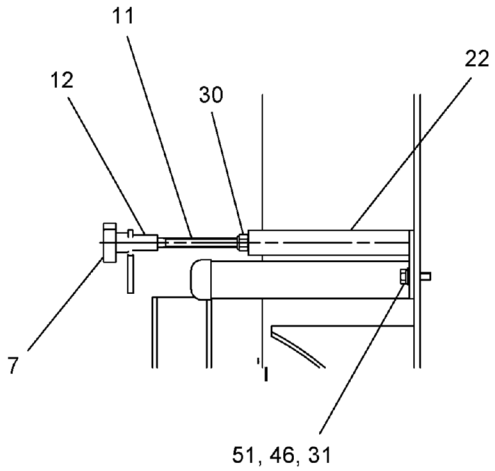

SECTION B - B

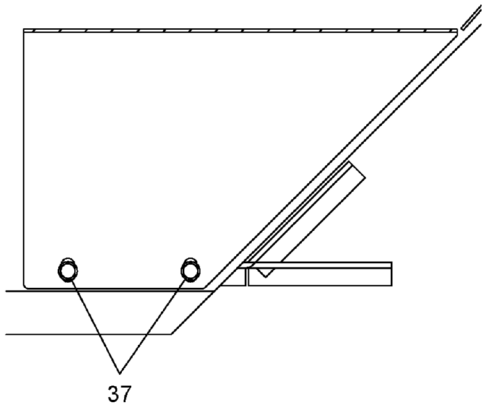

SECTION C - C

REF	PART NO.	DESCRIPTION	QTY
	T157321 (Rev. B)	*Superstructure Assembly*	
1	12019-7	Elbow, 90, MJIC-6/MJIC-6BH	1
2	1209-107	Spacer	7
3	12180-20	Tubing, -4 Green, 20" Long	1
4	12180-53	Tubing, -4 Green 53" Long	1
5	1219-605	Adapter, MJIC-6/MORB-6	1
6	1219-777	Cap, JIC-6	1
7	1221-81	Knob	1
8	209-00444	Handle	2
9	42689	Cup, Lubrication	1
10	706-9604	Mirror	1
11	707-8633	Stud Zinc	1
12	707F6609	Ear	1
13	707F8630	Bracket	1
14	707F8641	Bracket, Window	2
15	**717A0278**	Cab Mount ASSY (see page 25)	1
16	718-0670-22	Hose, -6, FJIC-6SW/FJIC-6SW	1
17	**718A0960**	House Lock ASSY (see page 27)	1
18	**721-0024**	Swing Brake Assembly (Braden) (see page 31)	1
19	721-0136	Pin - Hoist CYL	1
20	721-0148	Bar	2
21	721F0035	Superstructure Weldment	1
22	721F0255	Bracket	1
23	721F0258	Cover Weldment	1
24	722-0046	Mirror Bracket	1
25	**722A0003**	Upper Hydraulic ASSY (see page 34)	1
26	**722A0006**	Main Winch ASSY (see page 43)	1
27	**722A0053**	Swivel Assembly (see page 52)	1
28	N04-625C000-25	Nut, HEX 0.625-11, ST SQC G5	1
29	NYL-312C000-25	Nut, HEX NYL-INS 0.312-18, ST SQC G5	3
30	NYL-375C000-25	Nut, HEX NYL-INS 0.375-16, ST SQC G5	5
31	S01-312CA00-25	Capscrew, .31C X 1.00	8
32	S01-375CA25-25	SCR, HHCS 0.375-16 X 1.25, ST Z GR5	4
33	S01-500CA75-25	SCR, HHCS 0.50-13 X 1.75, ST Z GR5	2
34	S01-625CB25-Y8	SCR, HHCS 0.625-11 X 2.25, ST SQC G8	5
35	S01-625CC25-Y8	SCR, HHCS 0.625-11 X 3.25, ST SQC G8	1
36	SFP-A00CE00-2A	SCR, FLGHD 12PT 1.00-8 X 5.00, ST GRA SQC	51
37	SFS-190C750-25	SCR, HXFLG SERR #10-24 X 0.750 SQC G5	2
38	SHF-250C750-25	SCR, HHCS FT 0.25-20 X 0.75, ST Z G5	1
39	SHF-500CA25-25	SCR, HHCS FT 0.50-13 X 1.25, ST Z G5	4
40	SL5-190C500-20	SCR, CREC RND MS 10-24 X 0.50, ST SQC	6
41	T120964	Adapter, MNPT-2/PTC-4	2
42	**T142658**	Hoist Cylinder (Hengli) (see page 55)	1
43	T145513	Elbow, 90°, PTC-4-2	2
44	**T150054**	Upper Cab Assembly, 2017 (see page 57)	1
45	W07-250X000-20	WSH, LCK, MED SPLT 0.25, ST Z	1
46	W07-312X000-20	WSH, LCK, MED SPLT 0.3125, ST SQC	8
47	W07-500X000-20	WSH, LCK, MED SPLT 0.50, ST SQC	6
48	W07-750X000-20	WSH, LCK, MED SPLT 0.75, ST SQC	8
49	WAH-62NX000-20	WSH, FL HRD A-NRW 0.625, ST SQC	7

REF	PART NO.	DESCRIPTION	QTY
	T157321 (Rev. B)	*Superstructure Assembly*	
50	WAH-A0NX000-20	WSH, FL HRD A-NRW 1.00, ST SQC	44
51	WAN-31NX000-20	WSH, FL TYPA-NRW 0.3125, ST SQC	11

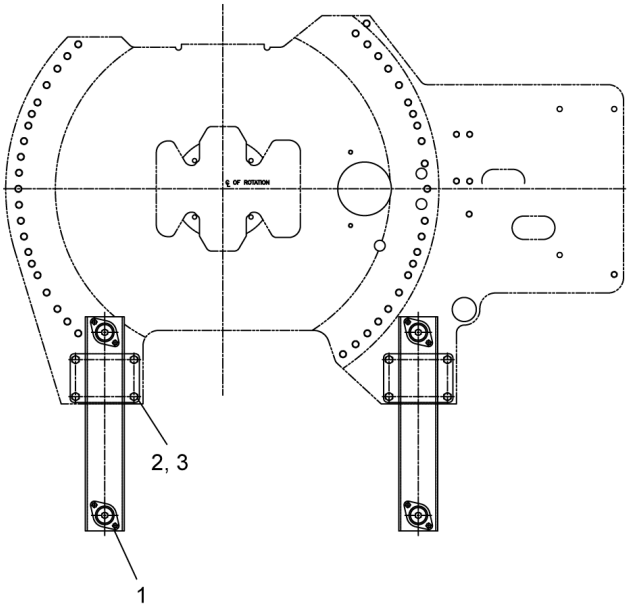

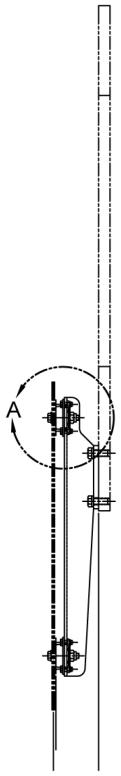

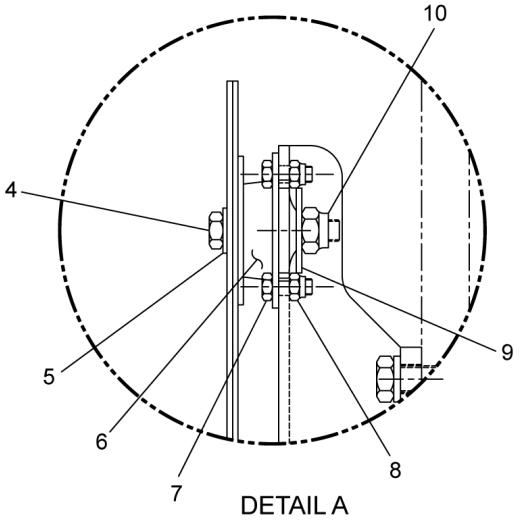

WHEN ORDERING PARTS, SPECIFY MODEL NUMBER, SERIAL NUMBER AND DESCRIPTION OF PARTS REQUIRED

REF	PART NO.	DESCRIPTION	QTY
	717A0278 (Rev. F)	*Cab Mount ASSY*	
1	717F0276	Mount, Cab	2
2	SHF-625CA50-Y8	SCR, HHCS FT 0.625-11 X 1.50, ST SQC G8	8
3	W07-625X000-20	WSH, LCK, MED SPLT 0.625, ST Z	8
4	S01-500CC50-25	SCR, HHCS 0.50-13 X 3.50, ST SQC G5	4
5	WAN-50NX000-20	1/2 Flat Washer	4
6	1221-137	Mount, Rubber	4
7	SHF-375CA25-25	SCR, HHCS FT 0.375-16 X 1.25, ST SQC G5	8
8	NYL-375C000-25	Nut, HEX NYL-INS 0.375-16, ST SQC G5	8
9	WFD-500XB00-20	WSH, FNDR 0.50 X 2.00, ST SQC	8
10	NYL-500C000-25	Nut, Lock, .50C	4

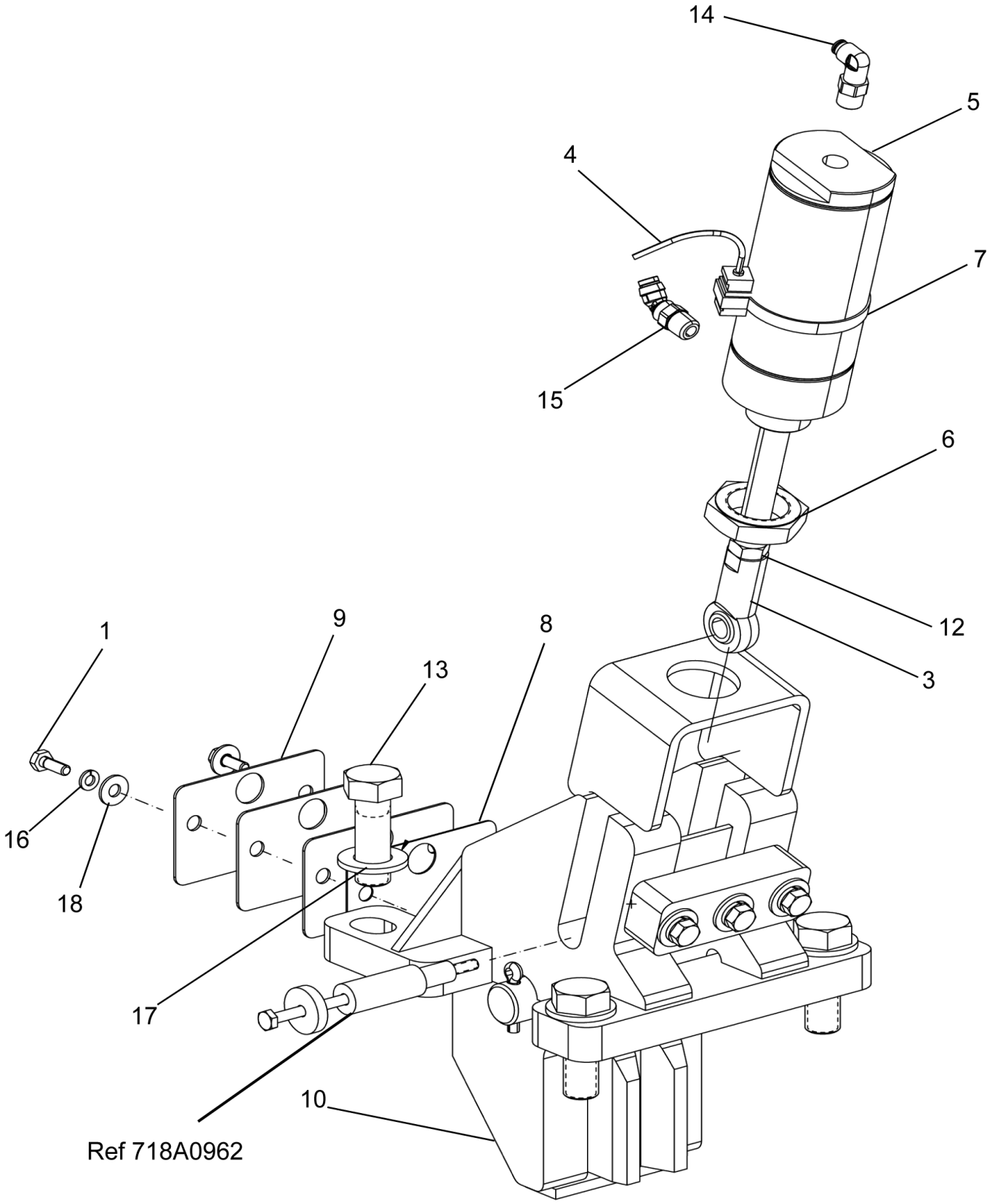

WHEN ORDERING PARTS, SPECIFY MODEL NUMBER, SERIAL NUMBER AND DESCRIPTION OF PARTS REQUIRED

LOAD KING BY CUSTOM TRUCK ONE SOURCE

SWING LOCK ASSEMBLY

DATE: Released 08-2018

MODEL: 480-126

PAGE: 27

CHAPTER

1

REF	PART NO.	DESCRIPTION	QTY
	718A0960 (Rev. C)	*House Lock ASSY*	
1	1200-1	SCR, HHCS .25 UNC X .75 GR5	2
2*	1266-1	Loom	30
3	422-3024	Rod End	1
4	714A1471	ASSY Reed Switch	1
5	718-0819	Cylinder	1
6	718-0820	Mounting Nut	1
7	718-0880	Clamp	1
8	718-0967	Shim - 20 GA.	1
9	718-0968	Shim 16 GA.	3
10	**718A0962**	House Lock ASSY (see page 29)	1
11*	MK255	Tie, Plastic	5
12	N05-500F000-25	Nut, HEX JAM 0.50-20, ST Z GR5	1
13	S01-750CB25-Y8	SCR, HHCS 075-10 X 225, ST YZ GR8	4
14	T118090	Elbow, 90, MNPT-4SW/PTC-4	1
15	T145521	Elbow, 45, MNPT-4/PTC-4	1
16	W07-250X000-20	WSH, LCK, MED SPLT 0.25, ST Z	2
17	WAN-75NX000-20	WSH, FL TYPA-NRW 0.75, ST Z	4
18	WAW-25WX000-20	WSH, FL TYPA-WID 0.25, ST SQC	2

* ITEM NOT SHOWN IN ILLUSTRATION

WHEN ORDERING PARTS, SPECIFY MODEL NUMBER, SERIAL NUMBER AND DESCRIPTION OF PARTS REQUIRED

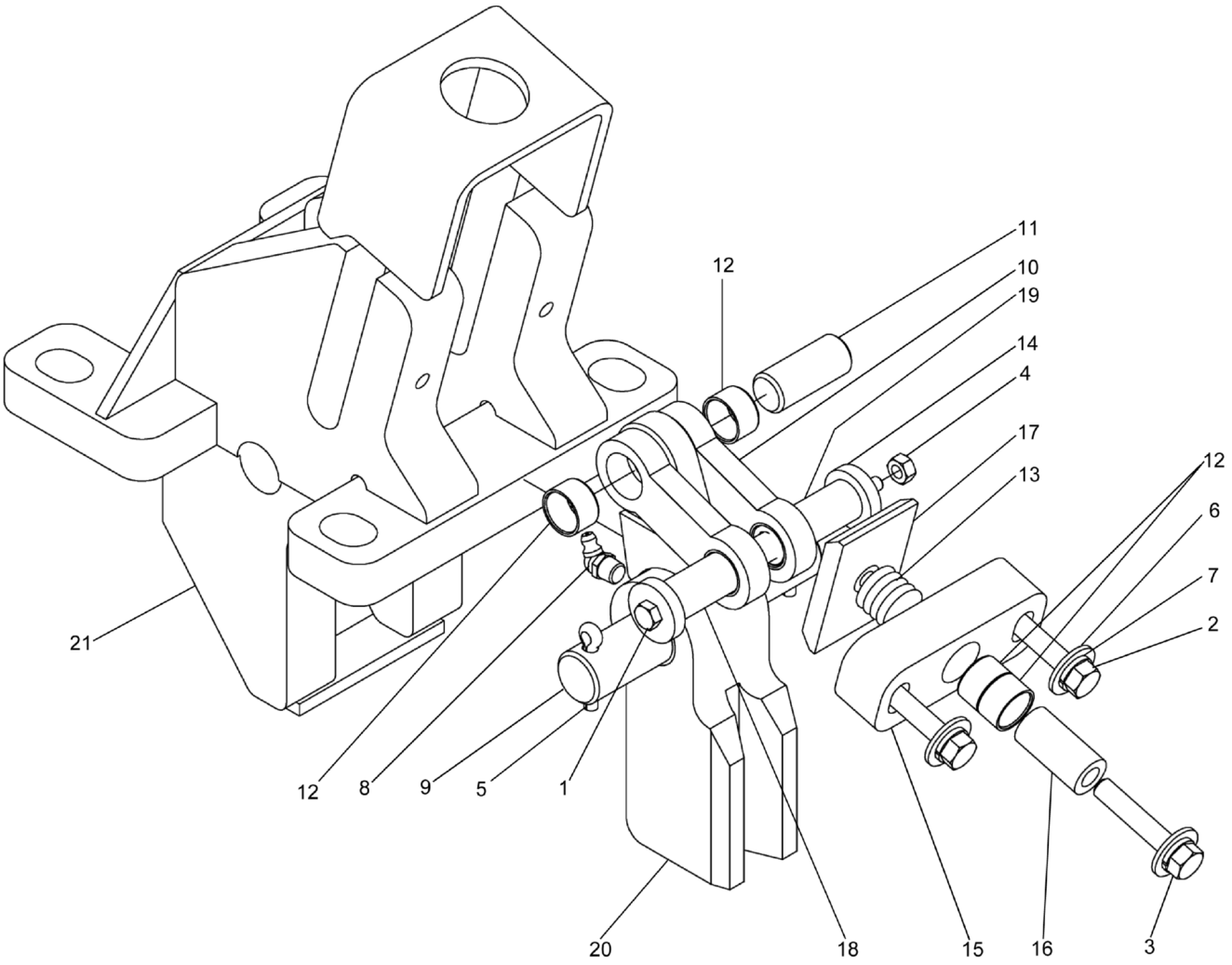

WHEN ORDERING PARTS, SPECIFY MODEL NUMBER, SERIAL NUMBER AND DESCRIPTION OF PARTS REQUIRED

LOAD KING BY CUSTOM TRUCK ONE SOURCE

HOUSE LOCK ASSEMBLY

DATE: Released 08-2018

MODEL: 480-126

PAGE: 29

CHAPTER

1

REF	PART NO.	DESCRIPTION	QTY
	718A0962 (Rev. A)	*House Lock ASSY*	
1	1200-401	1/4-20NC X 5.50 Bolt	1
2	1200-63	3/8-16NC X 2.00 Bolt	2
3	1200-67	3/8-16NC X 1.50 Bolt	1
4	1205-23	1/4-20NC Lock Nut	1
5	1207-40	Coder Pin	2
6	1209-4	3/8 Flat Washer	3
7	1210-20	Washer, Lock 3/8	3
8	1213-4	1/8 MPT ZERK 65°	1
9	708 0182	Pin	1
10	717 0895	Link	2
11	717 0896	Pin	1
12	717 0893	Bushing	6
13	717 0894	Spring	1
14	717 0899	Slug	2
15	717 0900	Plate-Spring	1
16	717 0901	Standoff	1
17	717 0902	Pad	1
18	718 0825	Pin	1
19	718 0826	Pin	1
20	718F0596	Lock Dog	1
21	718F0961	House Lock Mount	1

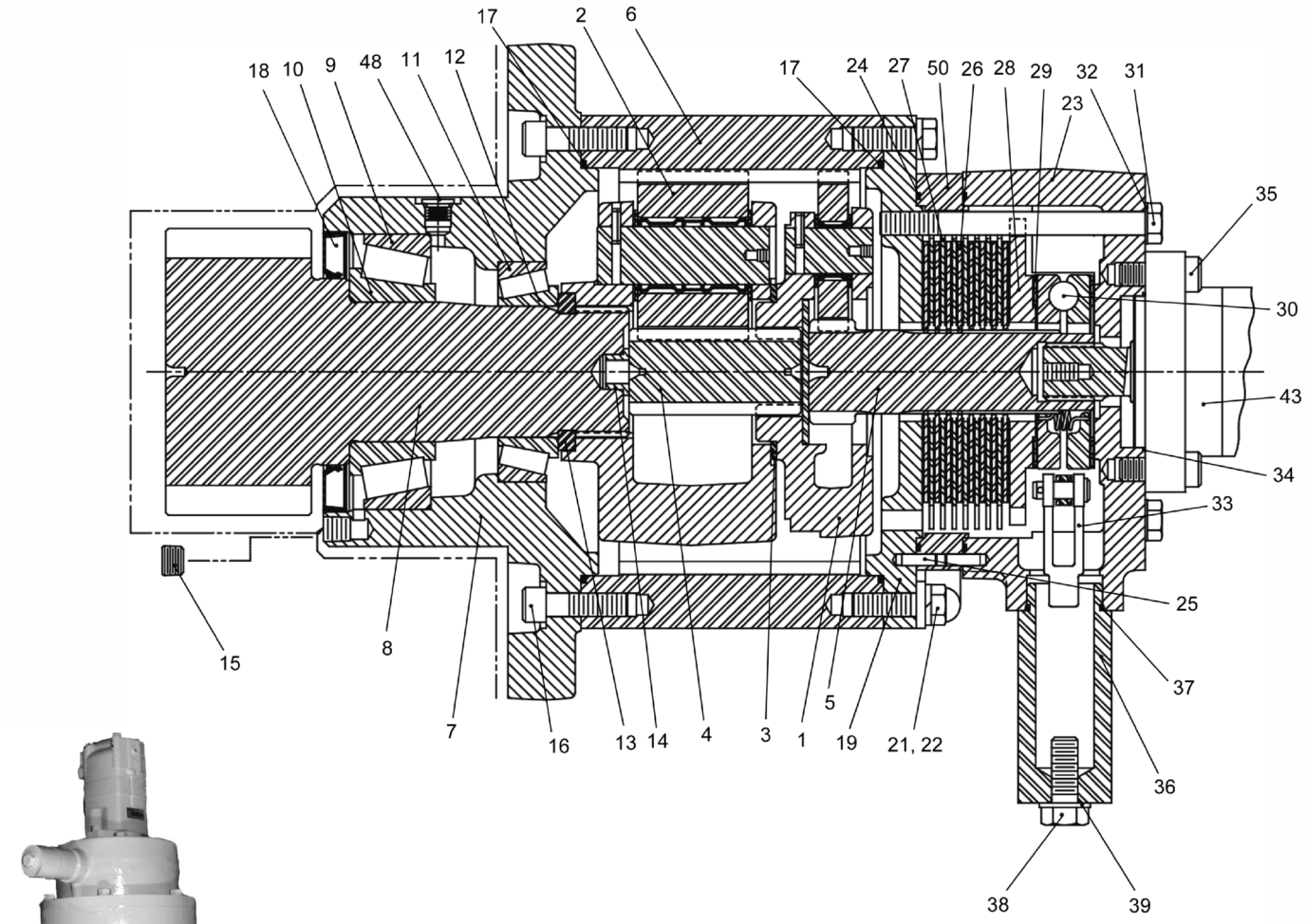
17
2
6
18
10
9
48
11
12
17
24
27
50
26
28
29
32
31
23
35
30
43
34
33
25
37
36
38
39
15
8
7
16
13
14
4
3
1
5
19
21, 22



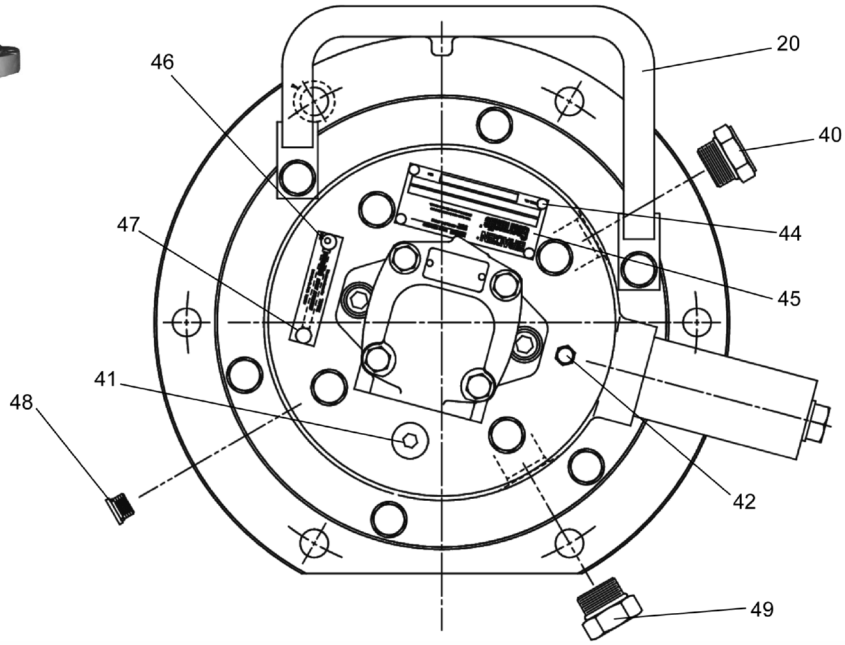
20
46
40
47
44
45
41
48
42
49

REF	PART NO.	DESCRIPTION	QTY
	721-0024 (Rev. C)	*Swing Brake Assembly (Braden)*	
1	216068	Primary Planet Carrier ASSY	1
2	216069	Output Planet Carrier ASSY	1
3	215455	Thrust Washer	1
4	215448	Output Sun Gear	1
5	218647	Input Sun Gear	1
6	216073	Ring Gear	1
7	218648	Pinion Housing	1
8	218649	Output Pinion	1
9	216119	Bearing Cup	1
10	216120	Bearing Cone	1
11	216121	Cup, Bearing	1
12	216122	Cone, Bearing	1
13	216123	Split Ring	1
14	216081	Flange Bushing	1
15	216124	Plug	1
16	218650	Capscrew, Socket HD (1/2 - 13 X 1-3/4)	12
17	216084	O-Ring	2
18	216125	Oil Seal	1
19	216086	Housing Adapter	1
20	216126	Handle	1
21	218651	Capscrew (1/2 - 13 X1-1/2 G8 Z)	6
22	215470	Lockwasher (1/2)	6
23	216090	Housing	1
24	216091	O-Ring	2
25	216092	Dowell Pin	2
26	216093	Friction Disc	8
27	216094	Brake Plate	7
28	216095	Piston	1
29	216096	Thrust Bearing	2
30	216097	Actuating Assembly	1
31	218652	Capscrew (1/2 - 13 X5-3/4 G8 Z)	4
32	216099	Washer	4
33	216100	Yoke End	1
34	216101	O-Ring	1
35	218653	Capscrew, Socket HD (1/2 - 13 X 1-1/4)	2
36	216103	Cable Adapter	1
37	216104	O-Ring	1
38	216105	Capscrew	1
39	216106	Seal Washer	1
40	218654	Sight Gauge	1
41	215457	Plug, O-Ring Flush	1
42	215458	Relief Valve	1
43	216127	HYD Motor	1
44	218655	Drive Screw	4
45	218656	Name Plate	1
46	218657	Drive Screw	2
47	218658	Plate	1
48	219325	Plug	1
49	218660	Plug	1

REF	PART NO.	DESCRIPTION	QTY
	721-0024 (Rev. C)	*Swing Brake Assembly (Braden)*	
50	218659	Spacer	1

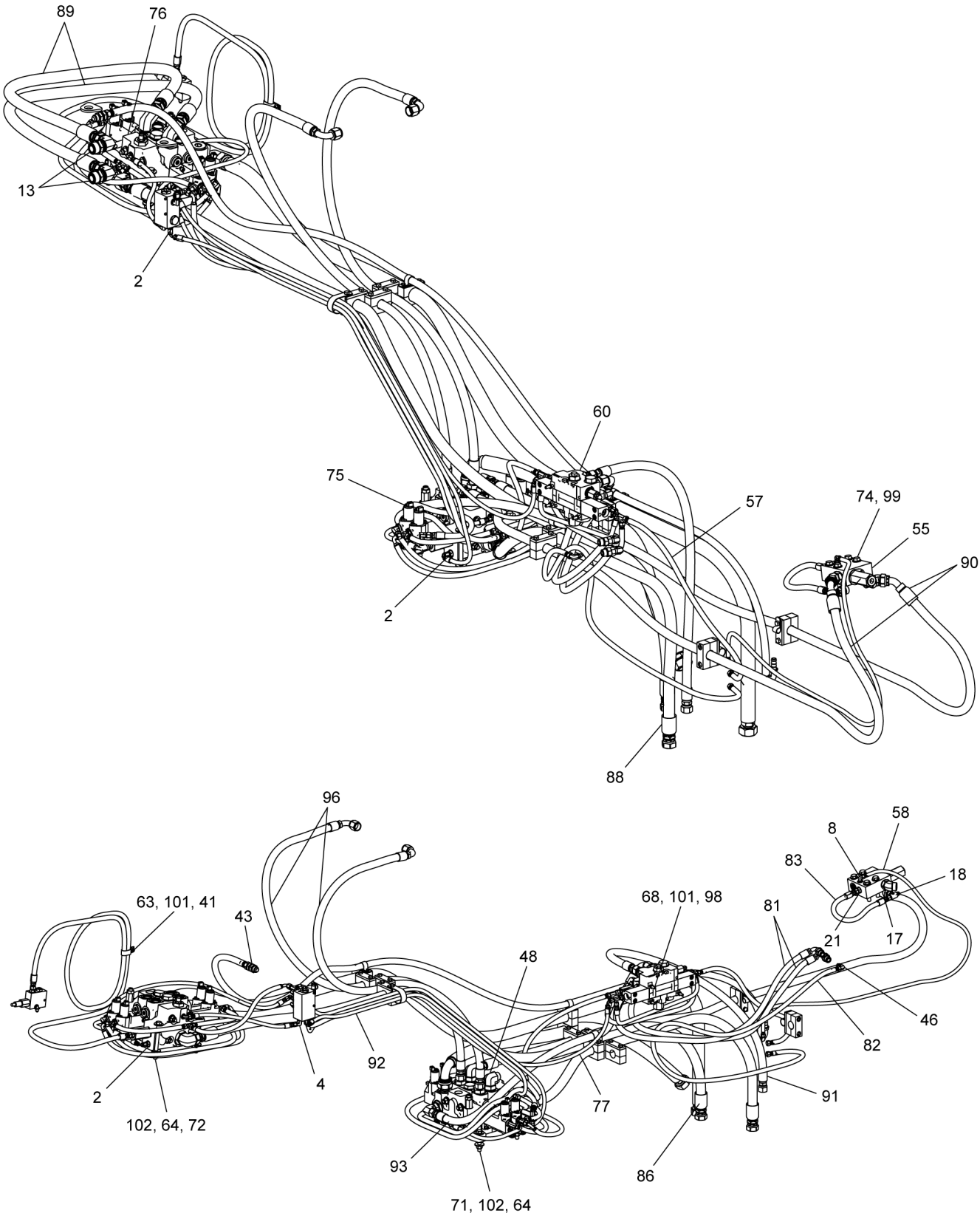

WHEN ORDERING PARTS, SPECIFY MODEL NUMBER, SERIAL NUMBER AND DESCRIPTION OF PARTS REQUIRED

LOAD KING BY CUSTOM TRUCK ONE SOURCE

UPPER HYDRAULIC ASSEMBLY

DATE: Released 08-2018

MODEL: 480-126

PAGE: 34

CHAPTER 1

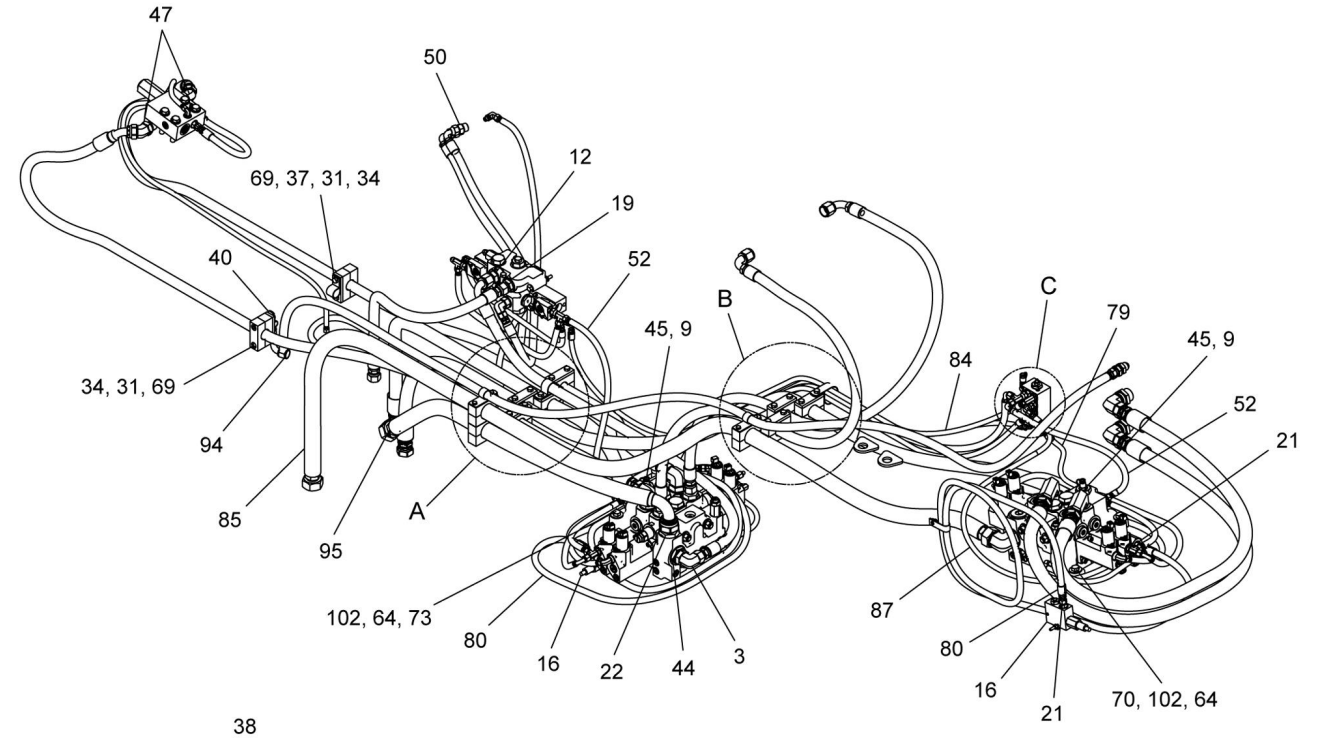

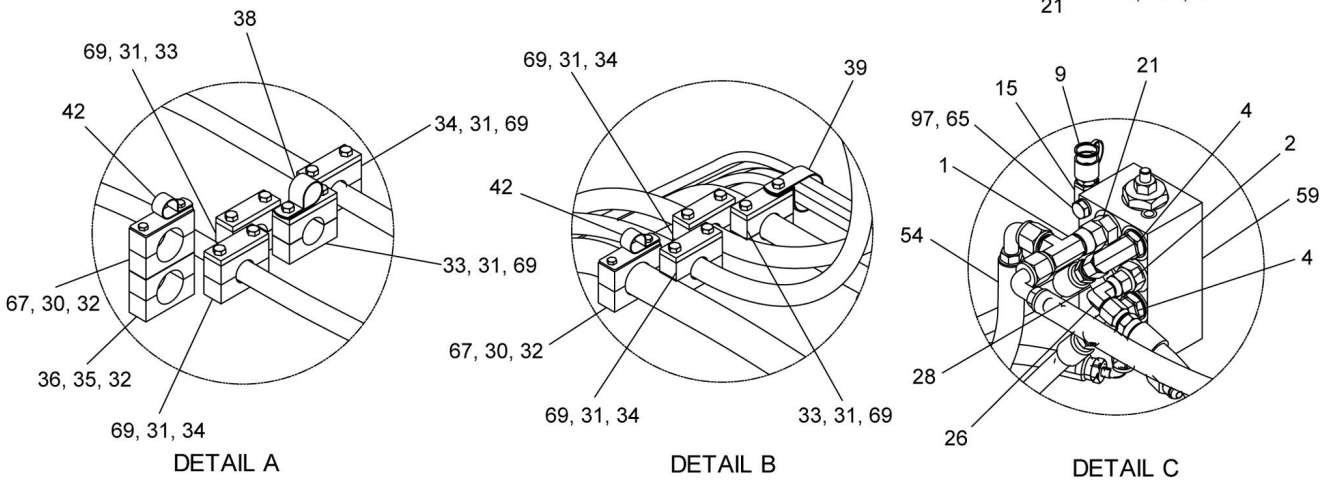

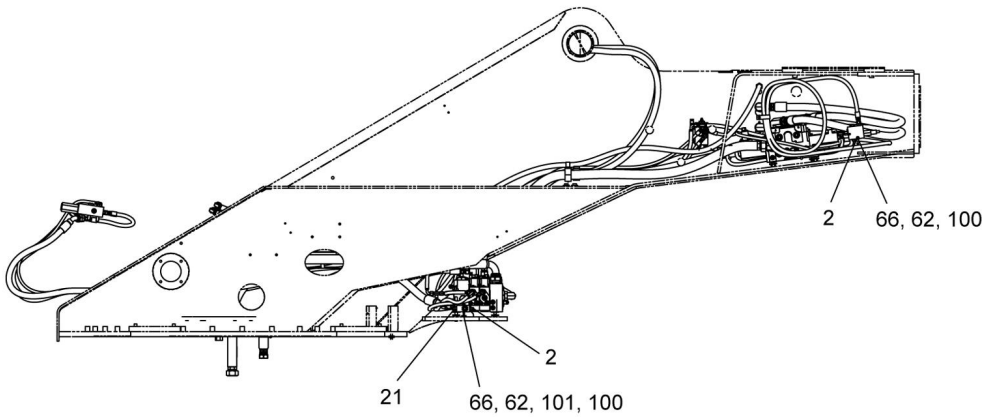

WHEN ORDERING PARTS, SPECIFY MODEL NUMBER, SERIAL NUMBER AND DESCRIPTION OF PARTS REQUIRED

LOAD KING BY CUSTOM TRUCK SOURCE

UPPER HYDRAULIC ASSEMBLY

DATE: Released 08-2018

MODEL: 480-126

PAGE: 35

CHAPTER 1

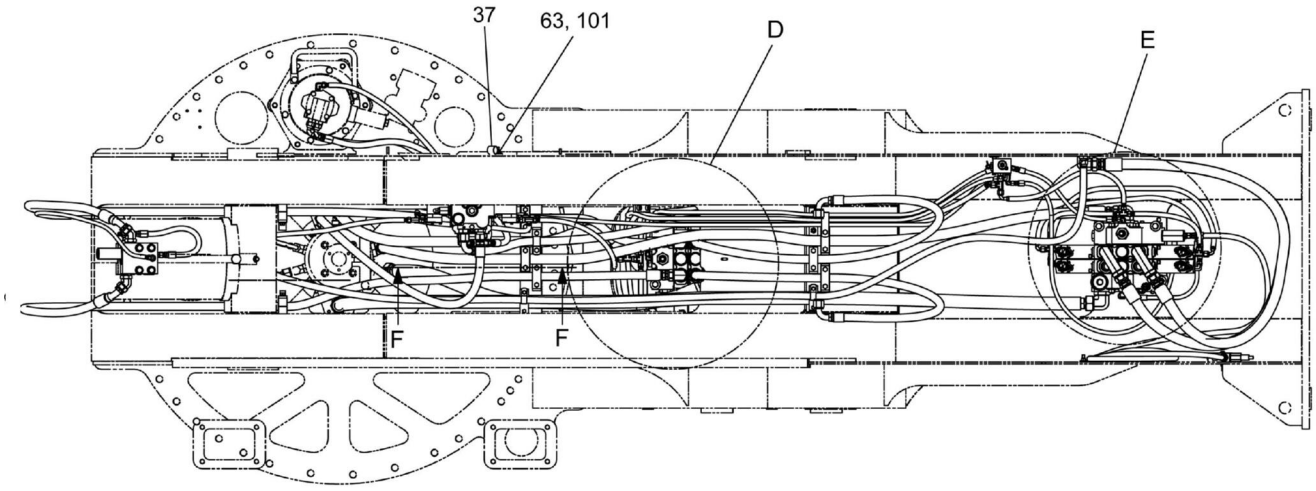

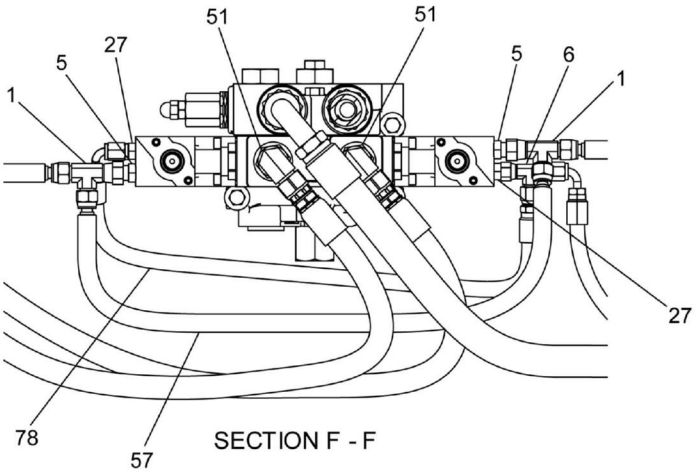

SECTION F - F

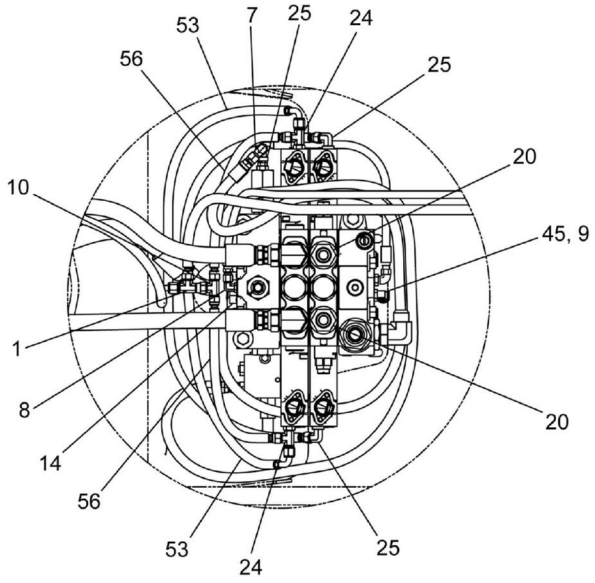

DETAIL D

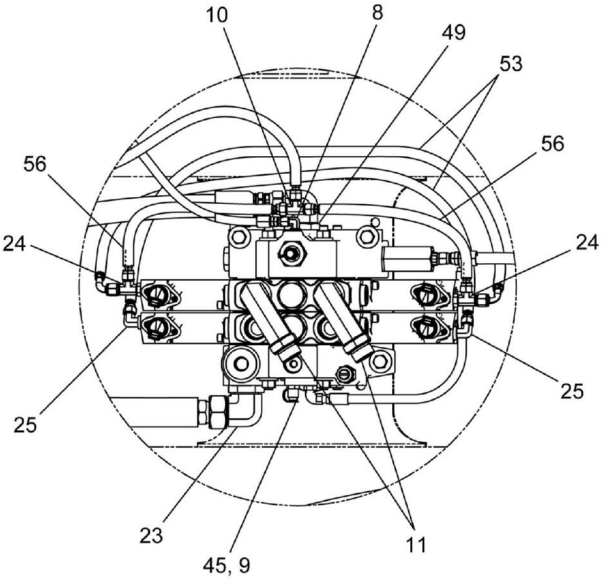

DETAIL E

REF	PART NO.	DESCRIPTION	QTY
	722A0003 (Rev. S)	*Upper Hydraulic ASSY*	
1	12019-112	Tee, -6	4
2	12019-205	Adapter, MJIC-4/MORB-6	6
3	12019-218	Elbow, 90, MORB-16/MJIC-12	1
4	12019-264	Elbow, 90, MJIC-4/MORB-6	3
5	12019-304	Adapter, MJIC-6/MORB-4	2
6	12019-453	Tee, MJIC-4/FJIC-4SW/MJIC-4	1
7	12019-483	Elbow, 90, MJIC-6/FJIC-6SW	1
8	12019-548	Elbow, 90, MJIC-4/MORB-4	3
9	12019-558	Dust Cap, HQC-4	5
10	12019-71	Tee, MJIC-6/MJIC-6/MJIC-6	2
11	12019-753	Elbow, 90, MOFS-16/MORB-16, L	2
12	12019-761	Check Valve	1
13	12019-767	Elbow, 90, BH, MOFS-16/MOFS-16	2
14	12019-768	Adapter, MOFS-16/MORB-20	1
15	12019-774	Disconnect, Quick, -6	1
16	12019-779	Valve, Relief	2
17	12019-783	Adapter, MORB-12/FORB-8	1
18	12019-788	Tee, MJIC-6/MJIC-6/MORB-8	1
19	1219-389	Adapter	1
20	1219-555	Adapter, MORB-16/MJIC-12	2
21	1219-605	Adapter, MJIC-6/MORB-6	5
22	1219-661	Adapter, MJIC-20/MORB-20	1
23	1219-686	Elbow, 90, MJIC-20/MORB-20	1
24	1219-693	Tee, MJIC-6/MORB-6/MJIC-6	4
25	1219-776	Elbow, 90, MJIC-6/MORB-6	5
26	1219-887	Elbow, 90, MJIC-4/FJIC-4SW	1
27	1219-959	Adapter, MJIC-4/MORB-4	2
28	1219-980	Plug, HEX, ORB-6	1
29*	1222-184	Plastic Tie	40
30	1240-191	Cover Plate 3.38 X 1.18	2
31	1240-195	Cover Plate 3.34 X 2.36	9
32	1240-204	Clamp Body, 2 PCS, 1.85 DIA	3
33	1240-209	Clamp Body, 2 PCS, 1.50 DIA	3
34	1240-215	Clamp Body, 2 PCS, 1.25 DIA	6
35	1240-279	Stacking Bolt, 0.25-20 X 2.87	2
36	1240-282	Plate, Safety Locking 3.34 X 1.10	1
37	1240-29	Clamp P, 1.125 DIA	2
38	200B2007-10	Clamp - Medium Duty 1.25	1
39	200B2007-16	Clamp - Medium Duty	1
40	200B2007-5	Clamp	1
41	200B2007-59	Clamp	1
42	200B2007-8	Clamp, MED, 1 ID	2
43	362-5712	Adapter, MJIC-10/MJIC-10BH	1
44	363 0082	Adapter, MORB-20/FORB-16	1
45	375-0400	Adapter, MORB-6/HQC-4	4
46	375-1406	Elbow, 90, MJIC-6/MORB-4	1
47	375-1804	Use 515-07002	2
48	376-1007	Use 514-59023	2
49	376-1102	Elbow, 90, MOFS-16/MORB-20	1

* ITEM NOT SHOWN IN ILLUSTRATION

WHEN ORDERING PARTS, SPECIFY MODEL NUMBER, SERIAL NUMBER AND DESCRIPTION OF PARTS REQUIRED

REF	PART NO.	DESCRIPTION	QTY
	722A0003 (Rev. S)	*Upper Hydraulic ASSY*	
50	513-50027	Adapter, MOFS-8/MORB-10	2
51	514-55014	Elbow, 90, MORB-10/MOFS-8	2
52	718-0548-26	Hose, -6, FJIC-6SW/FJIC-6SW90	2
53	718-0548-38	Hose, -6, FJIC-6SW/FJIC-6SW90	4
54	718-0548-78	Hose, -6, FJIC-6SW/FJIC-6SW90	1
55	718-0584	Holding Valve .75 Inch	1
56	718-0670-13	Hose, -6, FJIC-6SW/FJIC-6SW	4
57	718-0670-28	Hose, -6, FJIC-6SW/FJIC-6SW	2
58	718-0673-66	Hose, -4, FJIC-4SW/FJIC-4SW	1
59	721-0360	ASM Shuttle Reducing	1
60	**722-0060**	Valve, Swing (see page 40)	1
61*	MK213468	Sleeve 4"	30"
62	NYL-250C000-25	Nut, HEX NYL-INS 0.25-20, ST Z G5	2
63	NYL-312C000-25	Nut, HEX NYL-INS 0.312-18, ST SQC G5	2
64	NYL-500C000-25	Nut, Lock, .50C	6
65	S01-250CB25-25	SCR, HHCS 0.25-20 X 2.25, ST Z GR5	2
66	S01-250CB50-25	SCR, HHCS 0.25-20 X 2.50, ST Z GR5	2
67	S01-250CB75-25	SCR, HHCS 0.25-20 X 2.75, ST SQC G5	4
68	S01-312CC25-25	SCR, HHCS 0.3125-18 X 3.25, ST SQC G5	3
69	S01-375CB75-25	SCR, HHCS 0.375-16 X 2.75, ST Z GR5	18
70	S01-500CB50-25	SCR, HHCS 0.50-13 X 2.50, ST SQC G5	1
71	S01-500CC00-25	SCR, HHCS 0.50-13 X 3.00, ST Z GR5	1
72	S01-500CE50-25	SCR, HHCS 0.50-13 X 5.50, ST SQC G5	2
73	S01-500CF00-25	SCR, HHCS 0.50-13 X 6.00, ST SQC G5	2
74	S01-500FC00-Y8	SCR, HHCS 0.50-20 X 3.00, ST SQC G8	4
75	**T124759**	Valve, Boom/TELE (see page 41)	1
76	**T124760**	Valve, Winch (see page 42)	1
77	T131518	Hose, -4, 4000, FJIC-4SW/FJIC-4SW90, 2100	1
78	T144646	Hose, -4, 4000, FJIC-4SW/FJIC-4SW90, 550	1
79	T144712	Hose, -4, 5000, FJIC-4SW/FJIC-4SW, 525	1
80	T144734	Hose, -6, 5000, FJIC-6SW/FJIC-6SW, 3050	2
81	T144762	Hose,- 8, 4000, FOFS-8SW/FOFS-8SW90, 1075	2
82	T144763	Hose, -6, 150, FJIC-6SW/FJIC-6SW, 1925	1
83	T144764	Hose, -6, 5000, FJIC-6SW/FJIC-6SW, 500	1
84	T144765	Hose, -4, 4000, FJIC-4SW/FJIC-4SW90, 1900	1
85	T144766	Hose, -20, 150, FJIC-20SW/FJIC-20SW, 3325	1
86	T144767	Hose, -16, 5000, FOFS-16SW/FOFS-16SW, 3100	1
87	T144769	Hose, -4, 4000, FJIC-4SW/FJIC-4SW90, 1250	1
88	T144770	Hose, -16, 5000, FOFS-16SW/FOFS-16SW45, 1475	1
89	T144771	Hose, -16, 5000, FOFS-16SW/FOFS-16SW, 1750	2
90	T144772	Hose,- 12, 5000, FOFS-12SW/FOFS-12SW45, 2875	2
91	T144773	Hose, -12, 3000, FJIC-12SW/FJIC-12SW, 1200	1
92	T144776	Hose, -4, 5000, FJIC-4SW/FJIC-4SW90, 1650	1
93	T144866	Hose, -12, 3000, FJIC-12SW/FJIC-12SW90, 1250	1
94	T144867	Hose, -10, 50, FJIC-10SW/FJIC-10SW90, 3575	1
95	T144868	Hose, -20, 150, FJIC-20SW/FJIC-20SW90, 1275	1
96	T144888	Hose, -12, 4000, FJIC-12SW/FJIC-12SW90, 1975	2
97	W07-250X000-20	WSH, LCK, MED SPLT 0.25, ST Z	2
98	W07-312X000-20	WSH, LCK, MED SPLT 0.3125, ST SQC	3

* ITEM NOT SHOWN IN ILLUSTRATION

WHEN ORDERING PARTS, SPECIFY MODEL NUMBER, SERIAL NUMBER AND DESCRIPTION OF PARTS REQUIRED

REF	PART NO.	DESCRIPTION	QTY
	722A0003 (Rev. S)	*Upper Hydraulic ASSY*	
99	WAH-50NX000-20	WSH, FL HRD A-NRW 0.50, ST SQC	4
100	WAW-25WX000-20	WSH, FL TYPA-WID 0.25, ST SQC	2
101	WAW-31WX000-20	WSH, FL TYPA-WID 0.3125, ST SQC	6
102	WAW-50WX000-20	WSH, FL TYPA-WID 0.50, ST SQC	18

* ITEM NOT SHOWN IN ILLUSTRATION

WHEN ORDERING PARTS, SPECIFY MODEL NUMBER, SERIAL NUMBER AND DESCRIPTION OF PARTS REQUIRED

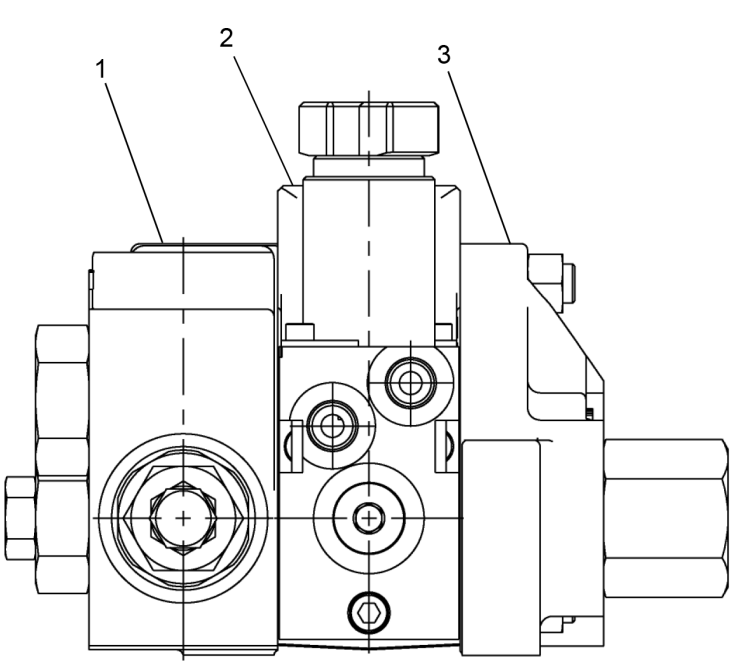

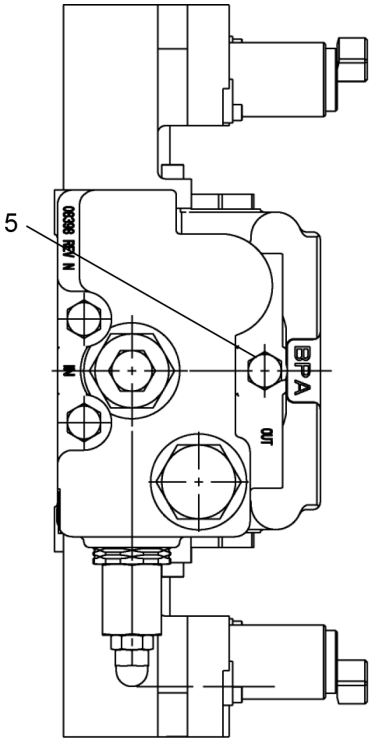

REF	PART NO.	DESCRIPTION	QTY
	722-0060 (Rev. 00)	*Valve, Swing*	
1	226209	V20 Inlet	1
2	226210	V20 Par, 4Way Free/Flow, SOL-12V	1
3	226211	V20 Outlet	1
4*	226212	ASSY, Section Seals	1
5	226213	Stud ASSY, 4.25 LG	1

* ITEM NOT SHOWN IN ILLUSTRATION

WHEN ORDERING PARTS, SPECIFY MODEL NUMBER, SERIAL NUMBER AND DESCRIPTION OF PARTS REQUIRED

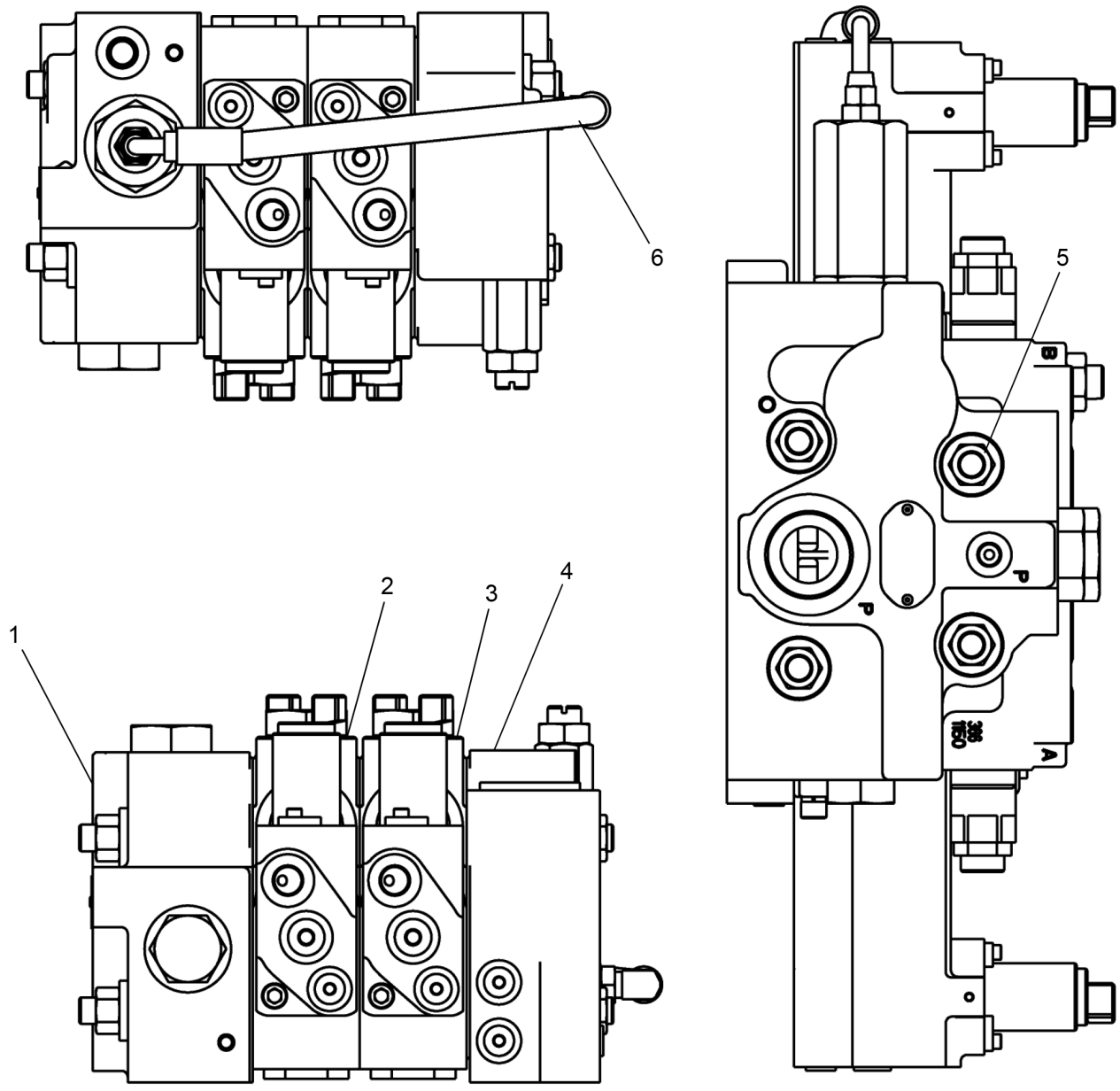

REF	PART NO.	DESCRIPTION	QTY
	T124759 (Rev. A)	*Valve, Boom/TELE*	
1	224418	PC55 Inlet Bypass COMP	1
2	219038	PC55 D/A HIN. VENT @ A	1
3	225608	PC55 D/A REGEN, Vent, A & B	1
4	219040	PC55 OUTLET	1
5	220410	Stud Assemblies 10.00 LG	4
6	220411	Hose, 0.025-SAE-17LG	1

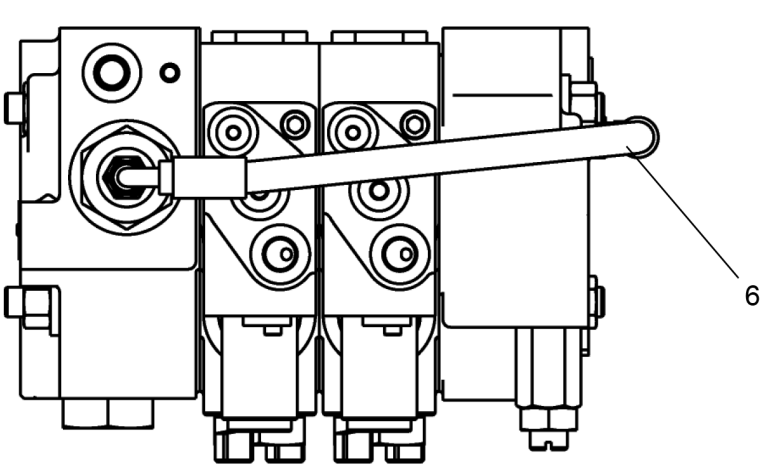

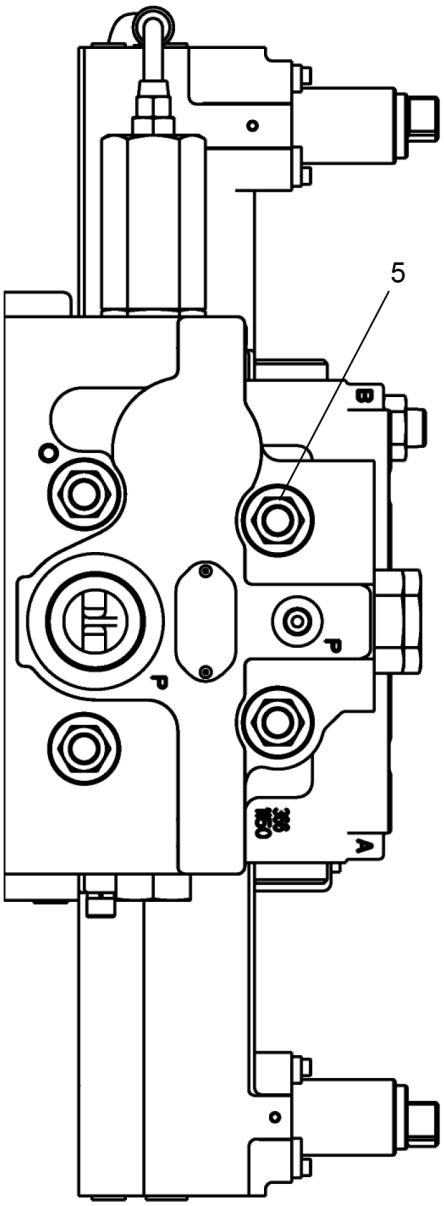

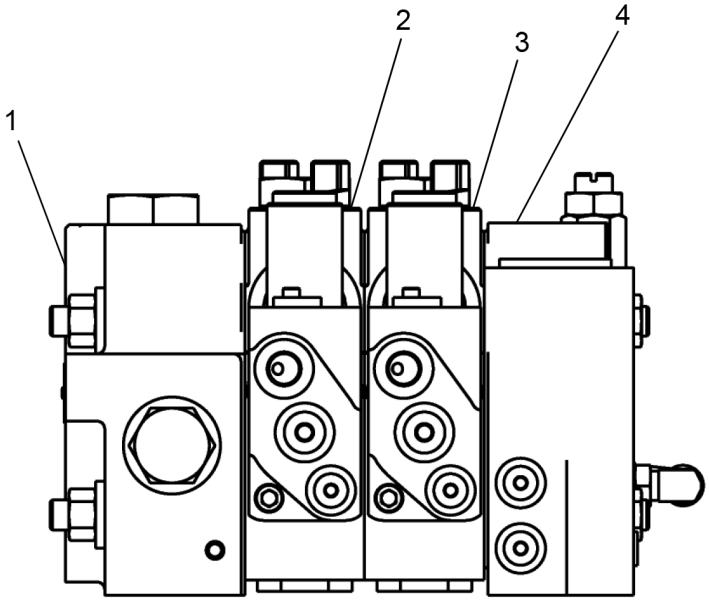

REF	PART NO.	DESCRIPTION	QTY
	T124760 (Rev. A)	*Valve, Winch*	
1	220406	PC55 Inlet Bypass COMP	1
2	220407	PC55 D/A MOT, PWM	1
3	220408	PC55 D/A MOT. PWM	1
4	220409	PC55 Outlet	1
5	220410	Stud Assemblies 10.00 LG	4
6	220411	Hose, 0.025-SAE-17LG	1

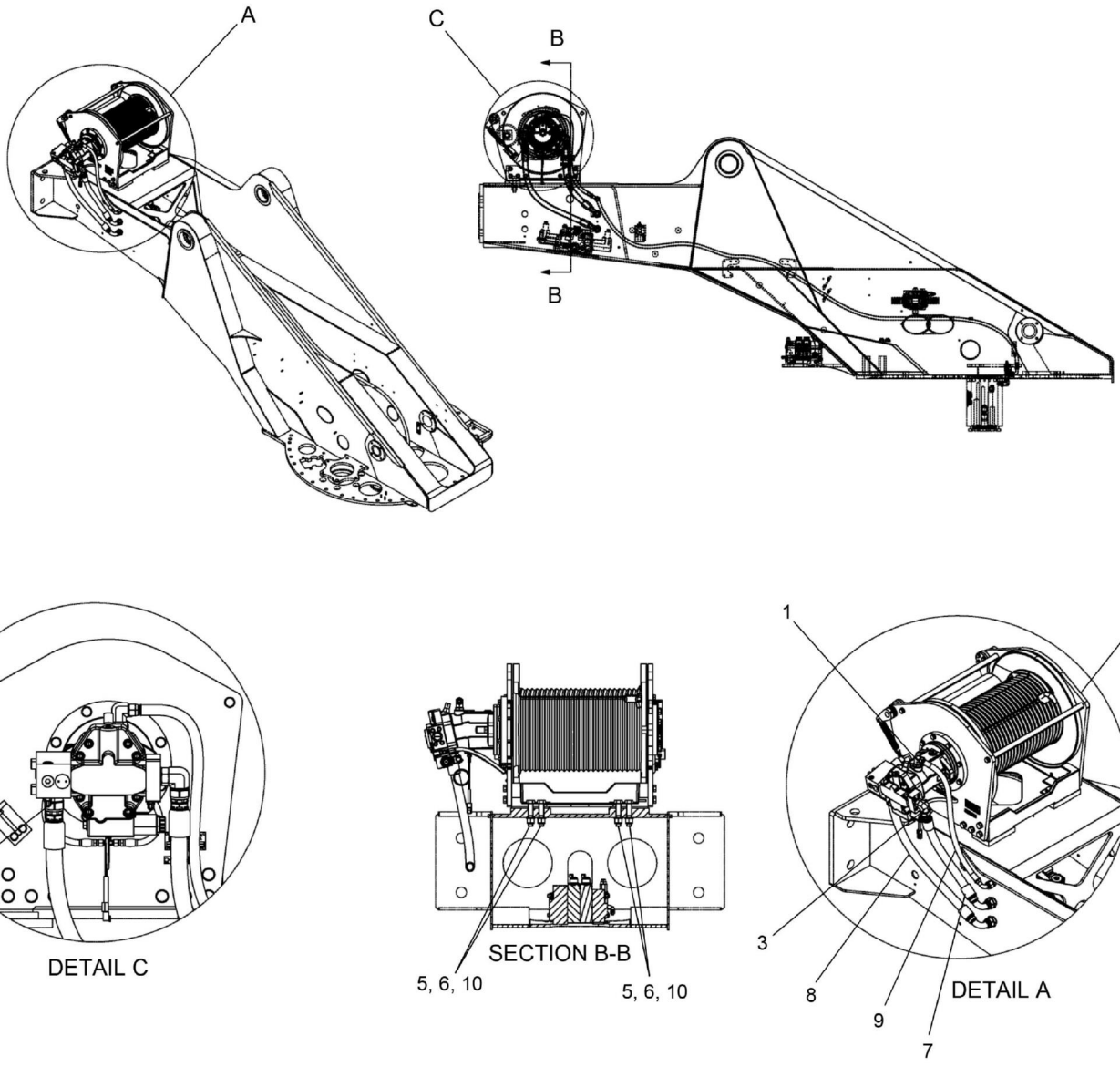

WHEN ORDERING PARTS, SPECIFY MODEL NUMBER, SERIAL NUMBER AND DESCRIPTION OF PARTS REQUIRED

REF	PART NO.	DESCRIPTION	QTY
	722A0006 (Rev. D)	*Main Winch ASSY*	
1	12019-517	Elbow, BLKHD, 90, MORB-12/MJIC-10	1
2	12019-734	Adapter, MOFS-16/MORB-12	1
3	376V1003	Elbow, 90, MOFS-16/MORB-12	1
4	**720-0408**	Hydraulic Winch Assembly (Braden) (see page 45)	1
5	NYL-750C000-Y8	Nut, HEX NYL-INS 0.75-10,ST YZ G8	8
6	S01-750CC75-Y8	SCR, HHCS 0.75-10 X 3.75, ST SQC G8	8
7	T133269	Hose, -16, 5000, FOFS-16SW/FOFS-16SW90,600	1
8	T133270	Hose, -16, 5000, FOFS-16SW/FOFS-16SW90, 900	1
9	T133376	Hose, -10, 150, FJIC-10SW/FJIC-10SW90, 875	1
10	WAH-75NX000-Y2	WSH, FL HRD A-NRW 0.75, ST YZ	8

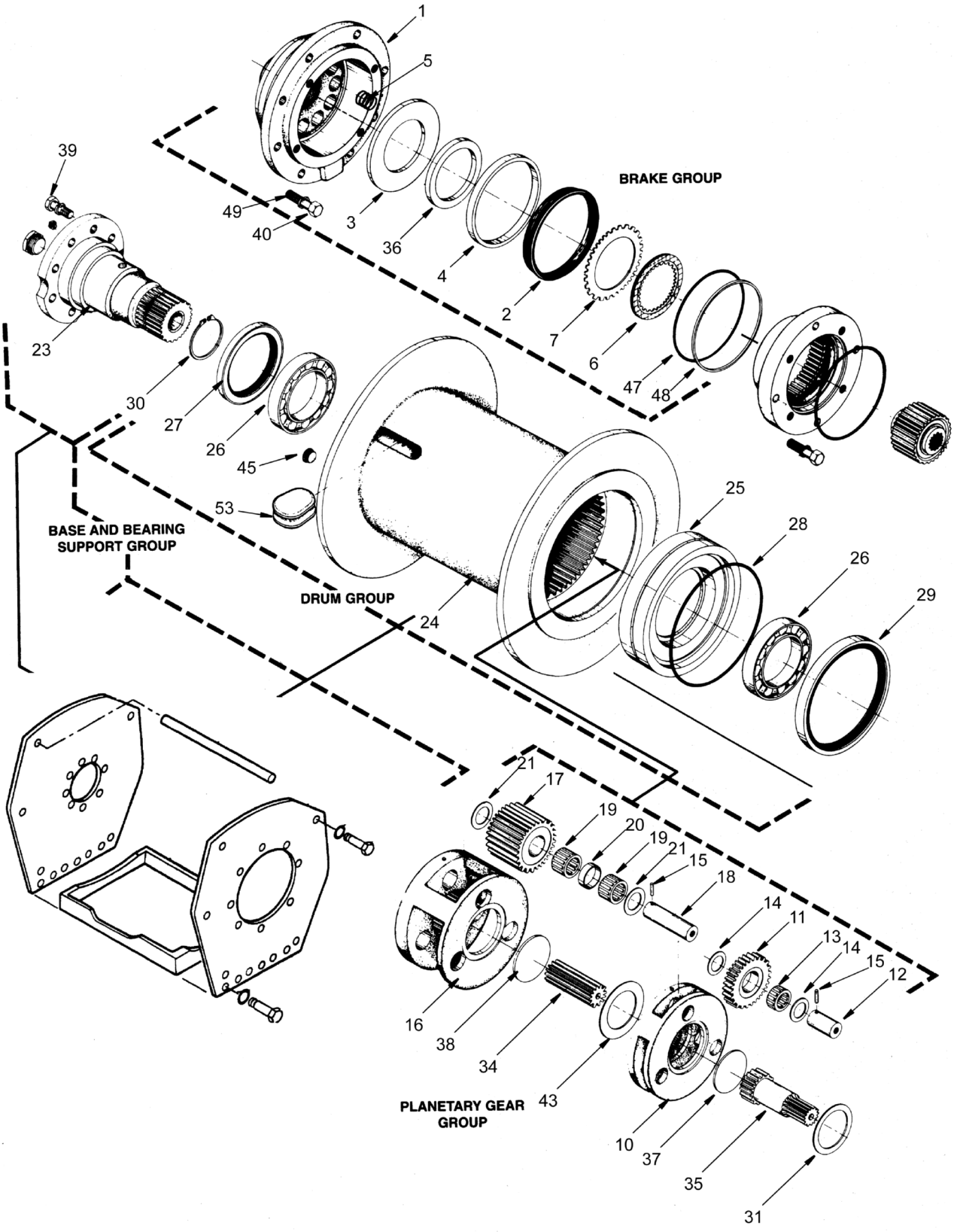

WHEN ORDERING PARTS, SPECIFY MODEL NUMBER, SERIAL NUMBER AND DESCRIPTION OF PARTS REQUIRED

LOAD KING BY CUSTOM TRUCK ONE SOURCE

WINCH ASSEMBLY (BRADEN)

DATE: Released 08-2018

MODEL: 480-126

PAGE: 45

CHAPTER 1

REF	PART NO.	DESCRIPTION	QTY
	720-0408 (Rev. 00)	*Hydraulic Winch Assembly (Braden)*	
1	215418	Brake Cylinder	1
2	215419	Seal	1
3	215420	Pressure Plate Stamping	1
4	215421	Piston Backup Ring	1
5	215422	Die Spring	12
6	215423	850170 Disc-Friction	7
7	215424	Brake Disk	8
8*	215459	O-Ring	1
9*	217070	Sprag	1
10	215425	Primary Planet Carrier	1
11	215426	Primary Planet Gear	3
12	215427	Primary Planet Gear Shaft	3
13	215428	Roller Bearing	3
14	215429	Bearing Race	6
15	215430	Spirol Pin	3
16	215431	Output Planet Carrier	1
17	215432	Output Planet Gear	3
18	215433	Output Planet Gear Shaft	3
19	215434	Roller Bearing	6
20	215435	Bearing Spacer	3
21	215436	Thrust Washer	6
22*	215454	Capscrew	8
23	215437	Bearing Support	1
24	217144	Cable Drum	1
25	215439	Cable Drum Closure	1
26	215440	Ball Bearing	2
27	215441	Oil Seal	1
28	215442	O-Ring	1
29	215443	Seal-Oil	1
30	215444	Retaining Ring, External	1
31	215445	Thrust Washer	1
32*	215446	Motor Support	1
33*	215447	Snap Ring	1
34	215448	Output Sun Gear	1
35	215449	Primary Sun Gear	1
36	215450	Spacer	1
37	215451	Primary Spacer	1
38	215474	Spacer, Output	1
39	215452	Capscrew	8
40	215453	Capscrew	8
41*	215446	Motor Support	1
42*	216770	Tie Bar	1
43	215455	Thrust Washer	1
44*	215456	Sight Gauge	1
45	215457	Plug, O-Ring Flush	1
46*	215458	Relief Valve	1
47	215459	O-Ring	1
48	215460	Back-Up Ring	1
49	215470	Lockwasher (1/2)	16

* ITEM NOT SHOWN IN ILLUSTRATION

WHEN ORDERING PARTS, SPECIFY MODEL NUMBER, SERIAL NUMBER AND DESCRIPTION OF PARTS REQUIRED

REF	PART NO.	DESCRIPTION	QTY
	720-0408 (Rev. 00)	*Hydraulic Winch Assembly (Braden)*	
50*	216767	Sideplate, Motor End	1
51*	216768	Sideplate, Support End	1
52*	218589	Lockwasher	16
52.1	218590	Capscrew	16
53	216529	Cable Wedge	1
54*	216772	Base	1
55*	**720-0408-Winch Motor**	Winch Motor Sub-Assembly (see page 48)	1

* ITEM NOT SHOWN IN ILLUSTRATION

WHEN ORDERING PARTS, SPECIFY MODEL NUMBER, SERIAL NUMBER AND DESCRIPTION OF PARTS REQUIRED

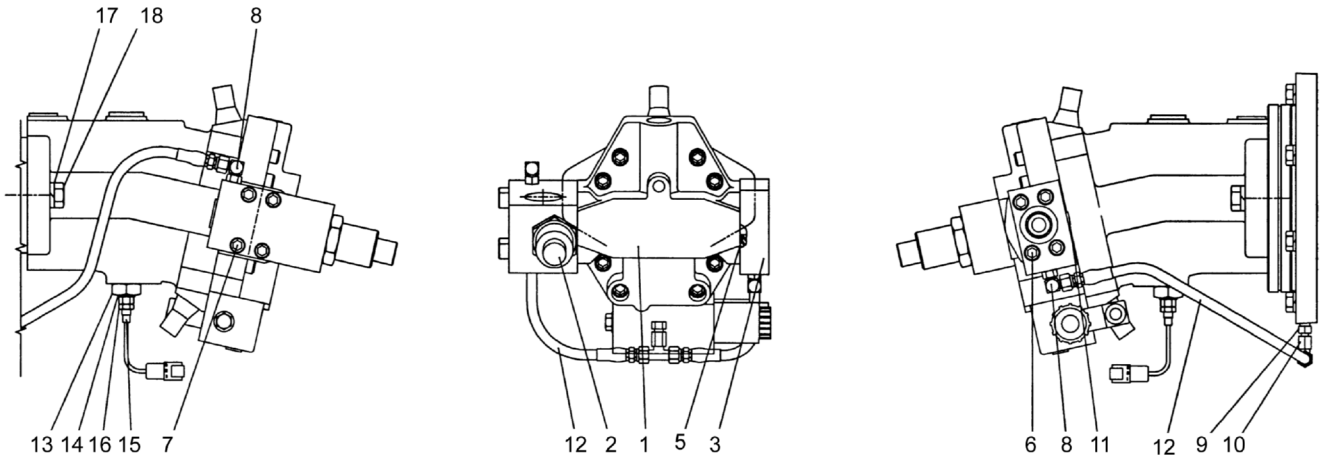
17
18
8
13
14
16
15
7
12
2
1
5
3
6
8
11
12
9
10

REF	PART NO.	DESCRIPTION	QTY
	720-0408-Winch Motor (Rev. 00)	*Winch Motor Sub-Assembly*	
1	**218751**	Hydraulic Motor (see page 50)	1
2	218752	Brake Valve	1
3	215521	Manifold	1
4*	218753	O-Ring	1
5	215522	O-Ring	1
6	215523	Capscrew (7/16 NC X 1-1/2 SOC HD G8)	4
7	218754	Capscrew(7/16 NC X 3-3/4 SOC HD G8)	4
8	215526	Elbow, 45°	2
9	215527	Adapter	2
10	218755	Swivel Tee	1
11	218756	Plug	1
12	218757	Hose Assembly	2
13	218783	Reducer, ORB	1
14	218713	Washer, Threadseal	1
15	218644	Rotation Sensor	1
16	218784	Jam Nut (3/8 Z)	1
17	216131	Lockwasher (5/8 Z)	2
18	218781	Capscrew (5/8 NC X 1-3/4 G8 Z)	2

* ITEM NOT SHOWN IN ILLUSTRATION

WHEN ORDERING PARTS, SPECIFY MODEL NUMBER, SERIAL NUMBER AND DESCRIPTION OF PARTS REQUIRED

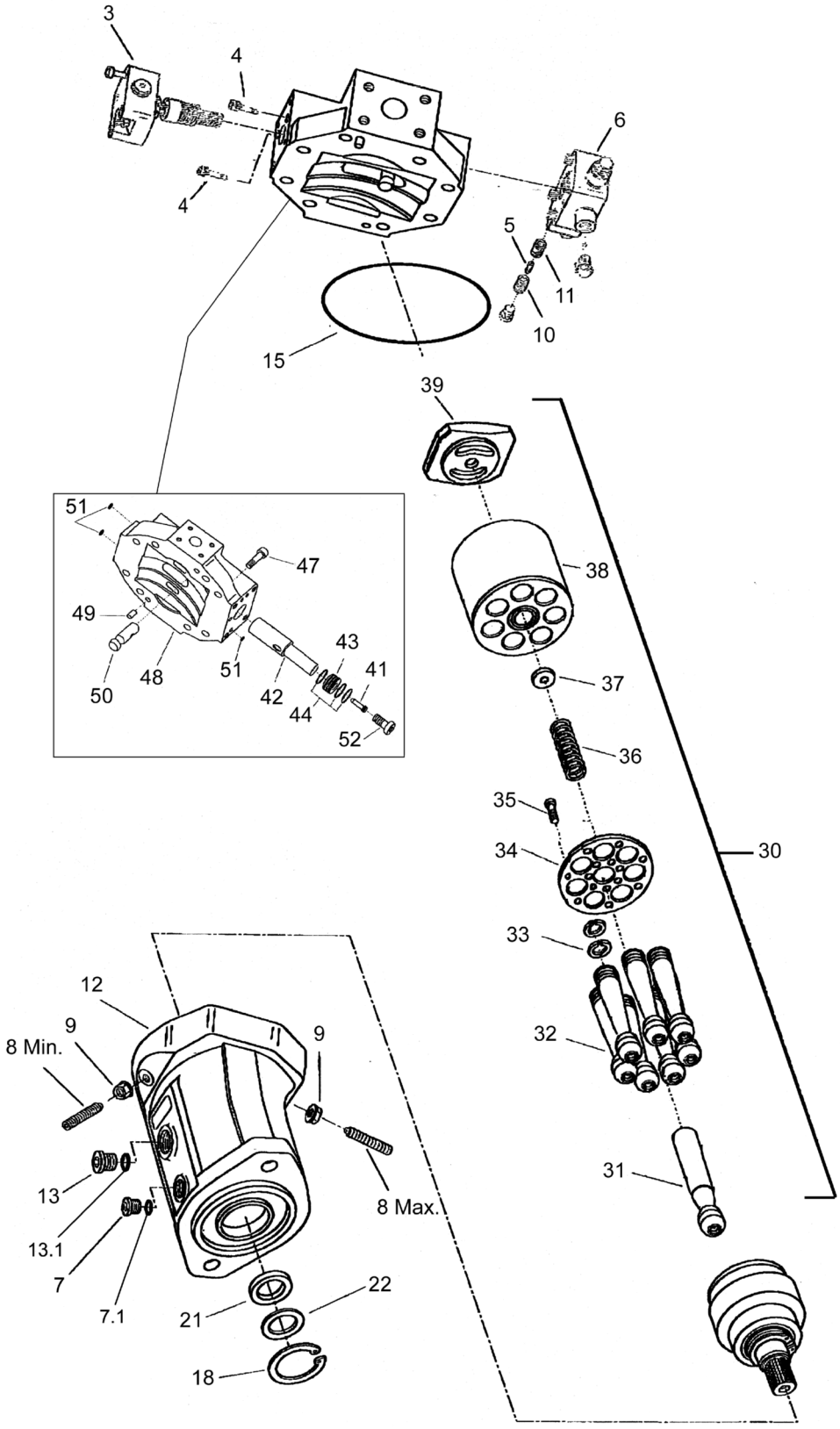

WHEN ORDERING PARTS, SPECIFY MODEL NUMBER, SERIAL NUMBER AND DESCRIPTION OF PARTS REQUIRED

LOAD KING BY CUSTOM TRUCK ONE SOURCE

WINCH MOTOR (9 PISTON REXROTH) (BRADEN)

DATE: Released 08-2018

MODEL: 480-126

PAGE: 50

CHAPTER 1

REF	PART NO.	DESCRIPTION	QTY
	218751 (Rev. 00)	*Hydraulic Motor*	
3	Control Kit	Control Kit	1
4	215667	Check Valve Kit	1
4	215668	Plug Kit	1
5	Shuttle Orifice	Shuttle Orifice	REF
6	215669	Stroking Piston Cover (w/ Flushing)	1
6	215670	Stroking Piston Cover (w/o Flushing)	1
7	215671	Plug (7/8-14)	1
7.1	215672	O-Ring (75 Duro FPM Tube PRP-910)	1
8	DISP. Stop Screw	DISP. Stop Screw	REF
9	215673	Seal Nut (M12)	2
10	215674	Orifice Seat - Outer	1
11	215675	Orifice Seat - Inner	1
12	215676	Housing	1
13	215677	Plug (1 1/16-12)	1
13.1	215678	O-Ring (75 Duro FPM Tube PRP-912)	1
15	215679	O-Ring (75 Duro FPM PRP-258)	1
18	215680	Snap Ring (M72 x 2.5 DIN 472)	1
21	215681	Shaft Seal (50 x 72 x 7 - FPM)	1
22	215682	Shim (M56 x 72 x 3.0 DIN 988)	1
30	215683	Hydraulic Rotary Group (Includes Items 31 Through 39)	REF
31	215684	Center Pin	1
32	215685	Pistons	7
33	215686	Piston Rings	3
34	215687	Retaining Plate	1
35	215688	Torx Head Screw	14
36	215689	Pressure Spring	1
37	Preload Shim	Preload Shim	REF
38	215690	Barrel	1
39	215691	Control Lens	1
41	215692	Threaded pin	1
42	215693	Square Ring (M25x1.5x1.5 DIN 34110)	1
43	215694	Piston	1
44	215695	Stroking Piston	1
47	215696	Capscrew (M12 x 65 DIN 912-8.8)	8
48	215697	Port Block (AA6VM 80/63)	1
49	215698	Dowel Pin (M10 x 20 DIN 7)	2
50	215699	Lens Pin	1
51	215700	O-Ring (90 Duro FPM PRP-011)	6
52	215701	Capscrew (M12 x 25 DIN 6912-8.8)	1

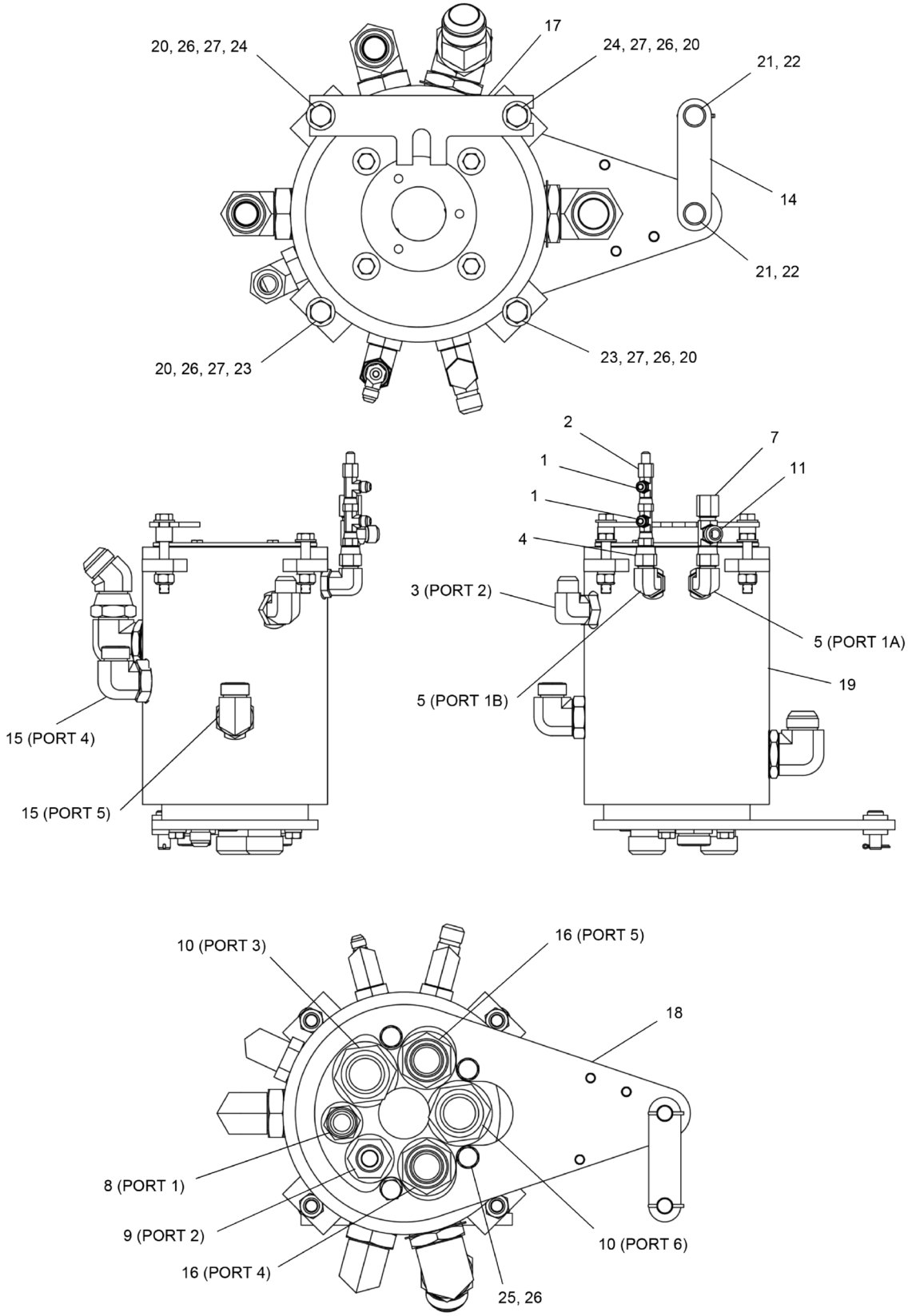

WHEN ORDERING PARTS, SPECIFY MODEL NUMBER, SERIAL NUMBER AND DESCRIPTION OF PARTS REQUIRED

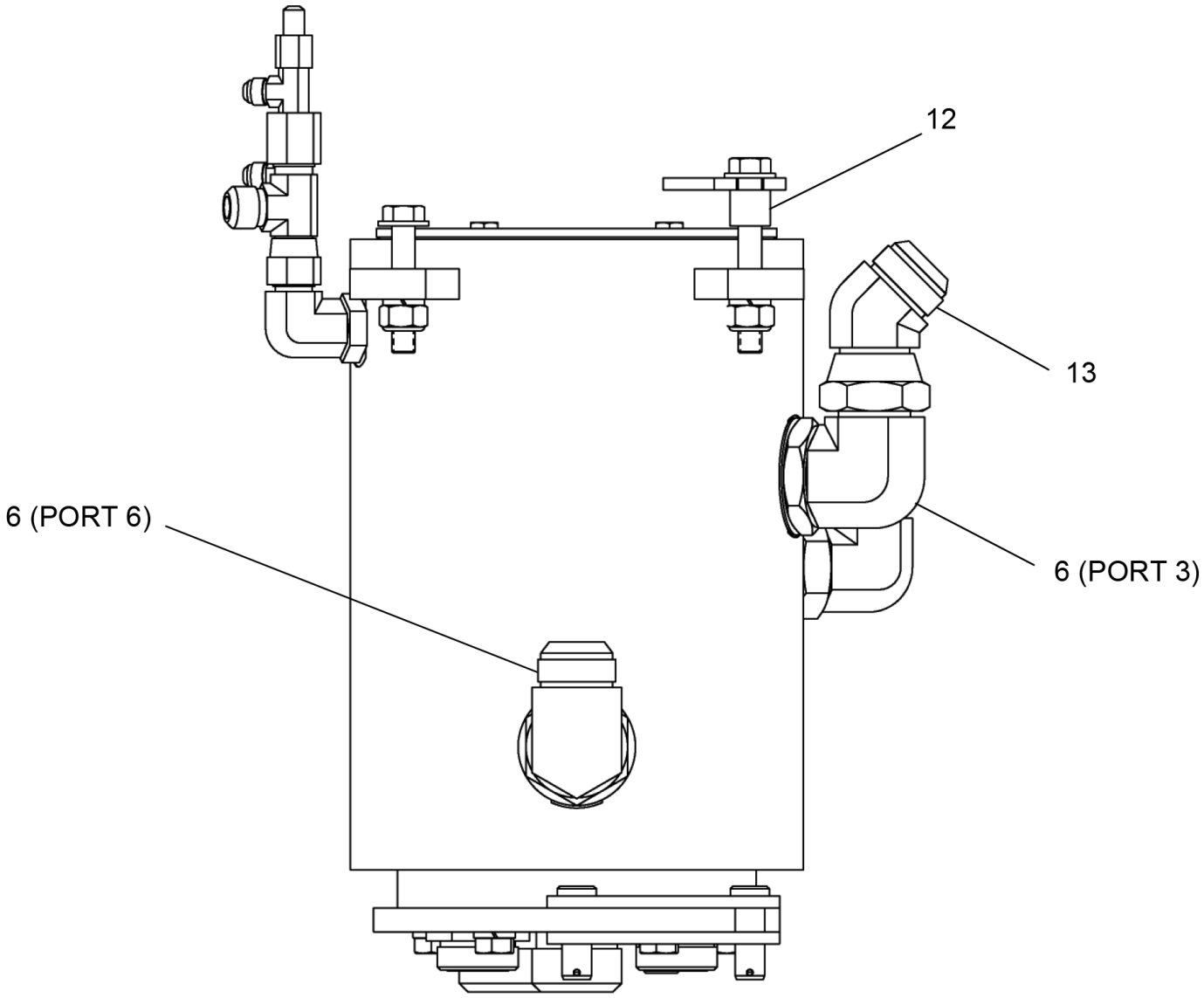
12
13
6 (PORT 6)
6 (PORT 3)

REF	PART NO.	DESCRIPTION	QTY
	722A0053 (Rev. G)	*Swivel Assembly*	
1	12019-112	Tee, -6	2
2	12019-158	Adapter, MJIC-4/FJIC-6	1
3	12019-218	Elbow, 90, MORB-16/MJIC-12	1
4	12019-457	Adapter, MJIC-6/FJIC-10SW	1
5	12019-517	Elbow, BLKHD, 90, MORB-12/MJIC-10	2
6	12019-786	Elbow, 90, MJIC-20/MORB-24	2
7	1219-260	Cap, Nut, JIC-10	1
8	1219-389	Adapter	1
9	1219-555	Adapter, MORB-16/MJIC-12	1
10	1219-920	Adapter, MJIC-24/MORB-24	2
11	1219-956	Tee, MJIC-10/FJIC-10SW/MJIC-10	1
12	200B0004-106	Spacer 0.546 X 0.84 X 0.75, ST Z	2
13	363-1109	Elbow, 45, MJIC-20/FJIC-20SW	1
14	37169-020	Link	2
15	376-1102	Elbow, 90, MOFS-16/MORB-20	2
16	376V0100	Adapter, MOFS-20/MORB-20	2
17	709-8076	Bracket, Anti-Rotation	1
18	718-0145	Torque Arm	1
19	722-0204	Swivel	1
20	NYT-500C000-22	Nut, NYLK HVYTHN 0.50-13, ST Z G2	4
21	P01-625XA75-P0	Pin, Clevis 0.625 X 1.75, STL	2
22	P02-125XA00-20	Pin, Cotter 0.125 X 1.00, ST Z	2
23	S01-500CB75-25	SCR, HHCS 0.50-13 X 2.75, ST Z GR5	2
24	S01-500CC75-25	SCR, HHCS 0.50-13 X 3.75, ST Z GR5	2
25	SHF-500CA25-25	SCR, HHCS FT 0.50-13 X 1.25, ST Z G5	4
26	W07-500X000-20	WSH, LCK, MED SPLT 0.50, ST SQC	8
27	WAN-50NX000-20	1/2 Flat Washer	4

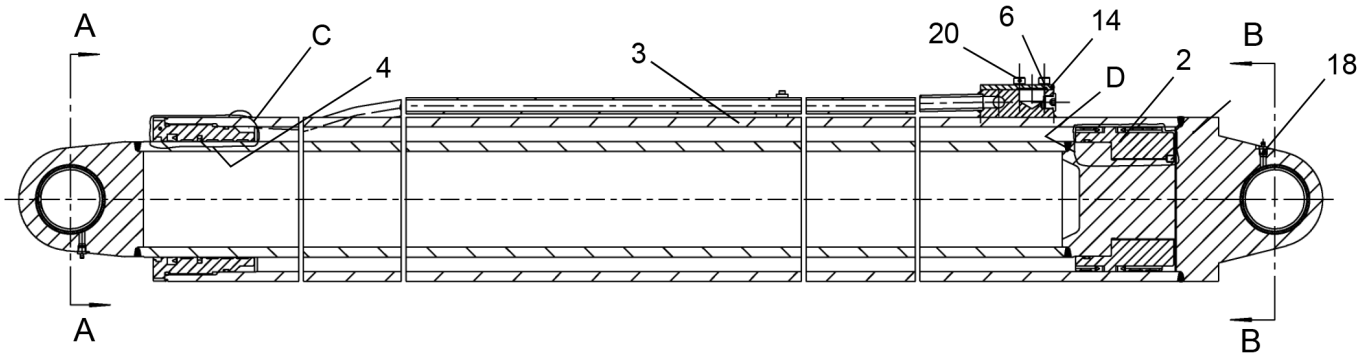
A
C
4
3
20
6
14
D
2
B
18
A
B

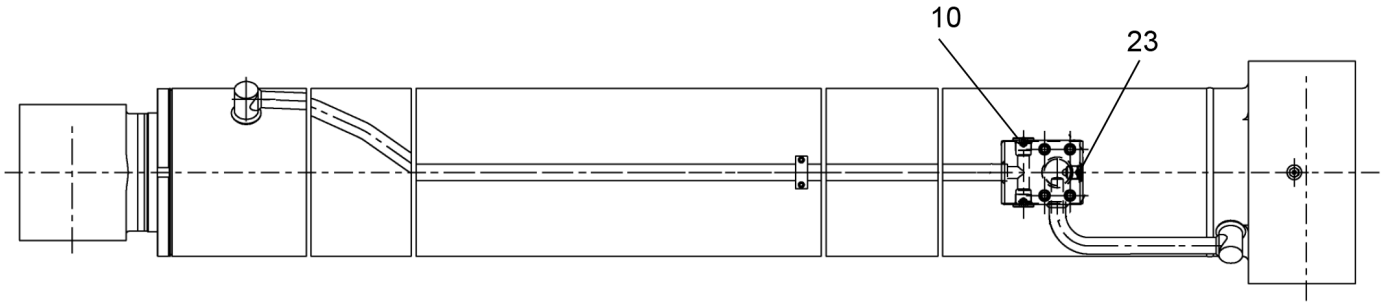
10
23

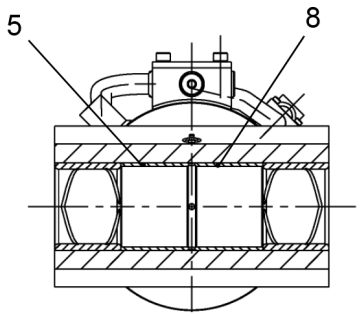
5
8
SECTION B-B

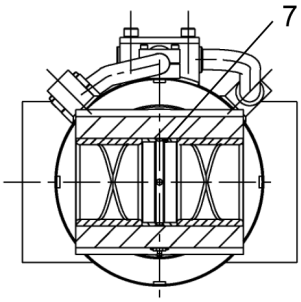
7
SECTION A-A

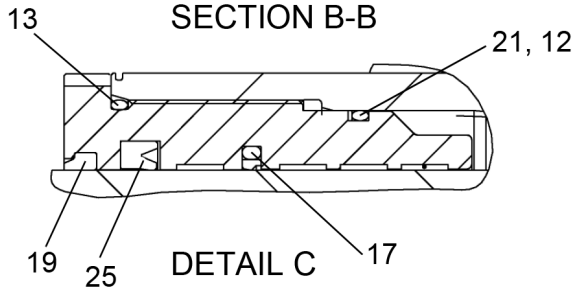
13
21, 12
19
25
DETAIL C
17

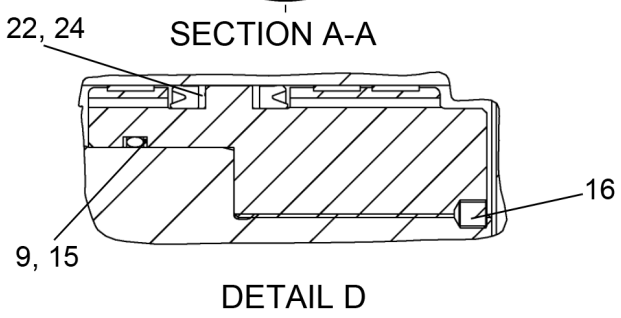
22, 24
16
9, 15
DETAIL D

REF	PART NO.	DESCRIPTION	QTY
	T142658 (Rev. 00)	*Hoist Cylinder (Hengli)*	
1*	228697	Barrel Assembly 250/200 X 2978-3639	1
2	228698	Piston 250/200 X 2978-3639	1
3	228699	Rod 250/200 X 2978-3639	1
4	228700	Guide Bush 250/200 X 2978-3639	1
5	228701	Bush 250/200 X 2978-3639	4
6	228702	O-Ring DIA 47.29 X 2.62	1
7	228703	Sleeve 1 250/200 X 2978-3639	1
8	228704	Sleeve 2 250/200 X 2978-3639	1
9	228705	O-Ring DIA 196.22 X 5.33	1
10	228619	Plug 1 1/16-12UN	2
11*	228707	Wear Ring 2.5 X 20	7
12	228708	O-Ring DIA 240.67 X 5.33	1
13	228709	O-Ring DIA 247.02 X 5.33	1
14	228710	Flange Cover 250/200 X 2978-3639	1
15	228711	Back-Up Ring DIA 205.7 X DIA197 X 1.5	2
16	228672	Set Screw M12 X 14	1
17	228713	Buffer Ring DIA 200 X DIA220.5 X 8.1	1
18	228675	Grease Fitting NPT1/4	2
19	228715	Wiper Ring DIA 200 X DIA215 X 9.5/14	1
20	228617	Screw 1/2-20UNF-1	4
21	228714	Back-Up Ring DIA 251 X DIA 242.3 X 1.5	1
22	228716	Back-Up Ring DIA 250 X DIA 230 X 3	2
23	228673	Plug 7/8-14UNF	1
24	228706	Piston Seal DIA 250 X DIA 230 X 13	2
25	228712	Rod Seal DIA 200 X DIA 225 X 17	1

* ITEM NOT SHOWN IN ILLUSTRATION

WHEN ORDERING PARTS, SPECIFY MODEL NUMBER, SERIAL NUMBER AND DESCRIPTION OF PARTS REQUIRED

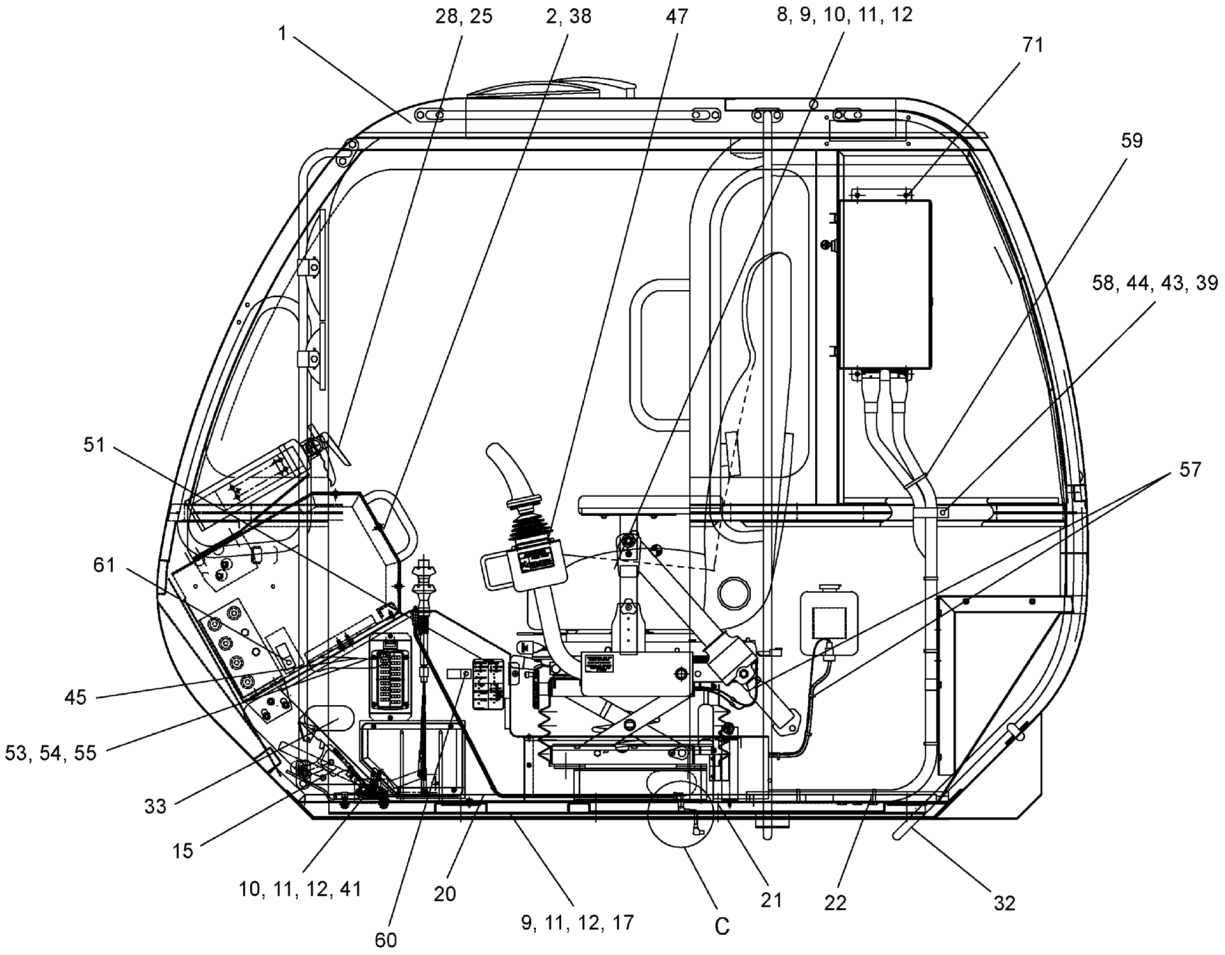

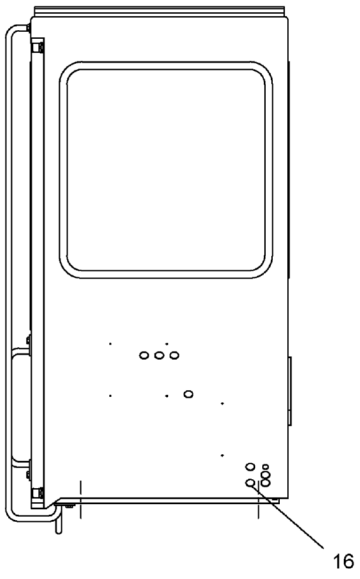

REAR OF CAB

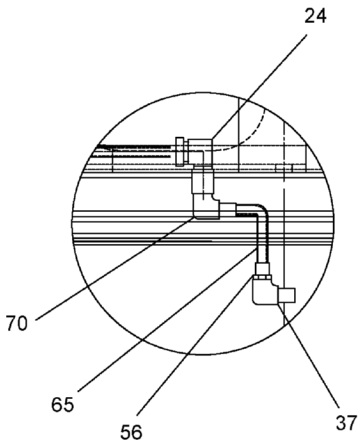

DETAIL C

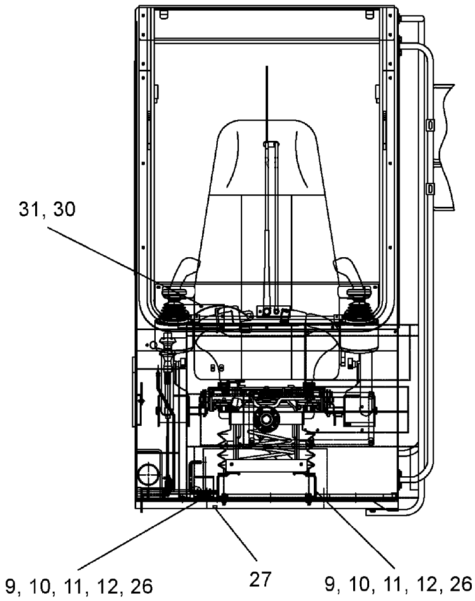

FRONT OF CAB

WHEN ORDERING PARTS, SPECIFY MODEL NUMBER, SERIAL NUMBER AND DESCRIPTION OF PARTS REQUIRED

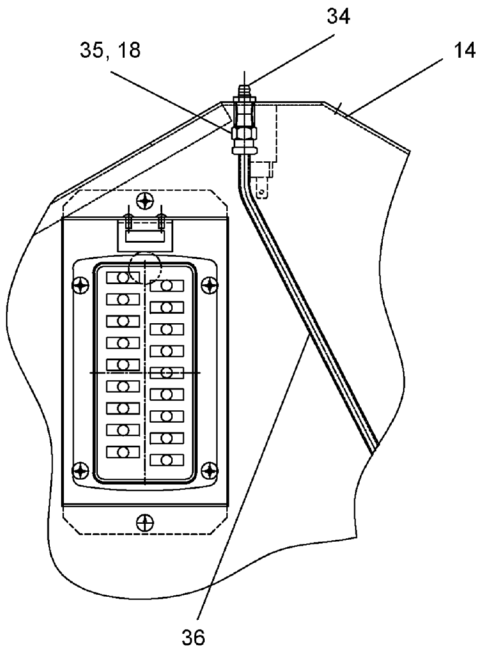

CABLE WAY GREASE LINE PIPING

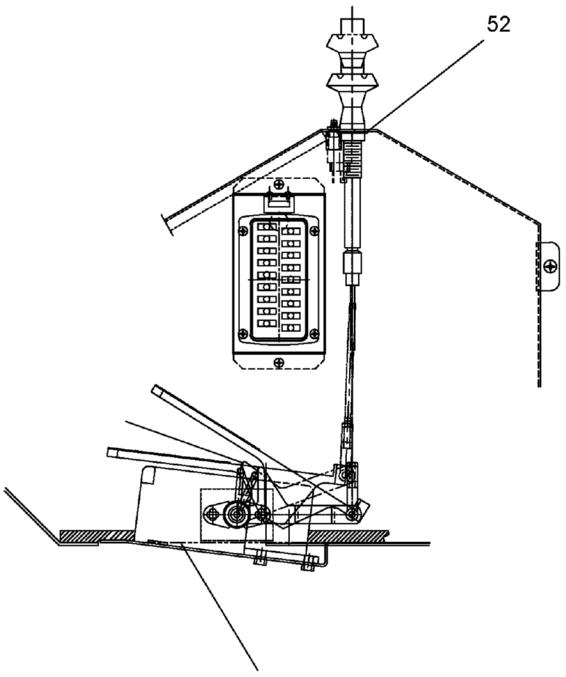

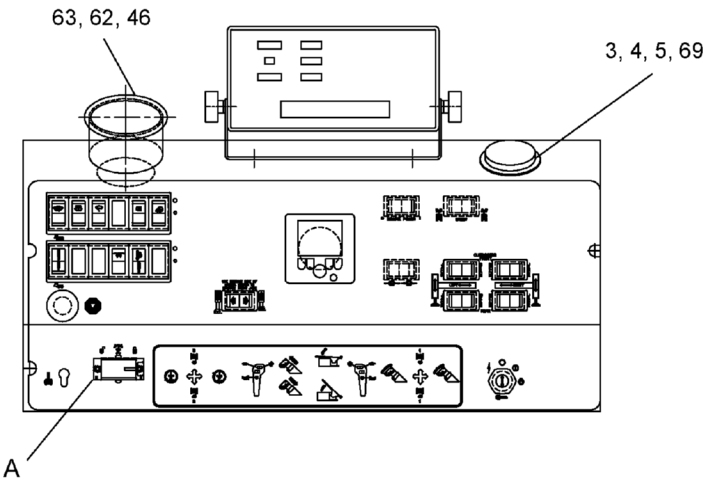

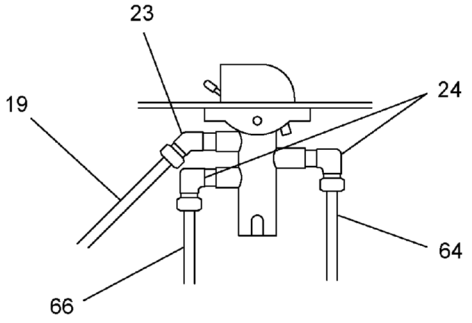

DETAIL A

REAR VIEW OF SWING LOCK SWITCH

REF	PART NO.	DESCRIPTION	QTY
	T150054 (Rev. D)	*Upper Cab Assembly, 2017*	
1	**T120173**	Cab, Operators (see page 61)	1
2	**T150055**	Upper Dash Assembly, 2017 (see page 79)	1
3	1245-62	Level Circular	1
4	SL4-138CA00-20	SCR, SLT RND MS 6-32 X 1.000, ST SQC	3
5	N23-138C000-20	Nut, HEX, MACH 06-32, ST SQC	3
6	724-0266	Pedal, Foot	1
7**	719A0929*	Cableway Assembly	REF
8	**719-0200**	Seat, Upper (see page 82)	1
9	S01-312CA00-25	Capscrew, .31C X 1.00	9
10	WAW-31WX000-20	WSH, FL TYPA-WID 0.3125, ST SQC	10
11	W07-312X000-20	WSH, LCK, MED SPLT 0.3125, ST SQC	10
12	N04-312C000-25	Nut, HEX 0.3125-18, ST Z GR5	11
13**	45528^	Seat belt ASSY	REF
14	SL4-138C500-20	SCR, SLT RND MS #6-32 X 1/2 ST SQC	2
15	**719A0408**	Throttle Control, Cab (see page 84)	1
16	1221-66	Grommet	3
17	1223-387	Horn 12V	1
18	1219-77	Adapter, MNPT-2/FINFLR-4	2
19	12181-1	Tubing, -4, Red	144''
20	719-0104	Floormat-Front	1
21	707-7712	Spacer	2
22	719-0222	Floormat-Rear	1
23	T138165	Elbow, 45, MNPT-2/PTC-4	1
24	T145513	Elbow, 90°, PTC-4-2	4
25	SL4-190C375-20	SCR, SLT RND MS 10-24 X 0.375 ST SQC	4
26	714-0497	Support, Seat	2
27	T141434	Clip, Edge With cable Tie	1
28	1222-217	Extinguisher, Fire	1
29**	12219-1	Cable 7 X 7 Aircraft Plastic	12''
30	SL4-190C750-20	SCR, SLT RND MS 10-24 X 0.750 ST Z	4
31	N23-190C000-20	Nut, HEX, MACH 10-24, ST Z	4
32	717-0699	Handle, Rear	1
33	12147-1	Channel U ALTA X-1054	24''
34	1213-1	1/8NPT Greese Zerk STR.	2
35	1219-757	Connector	1
36	719-0106	Grease Tube	2
37	1219-4	Adapter, 90°	1
38	S18-250C625-H2	SCR, BHSHCS 0.25-20 X 0.625, ST SQC	8
39	S01-250CA00-25	SCR, HHCS 0.25-20 X 1.00, ST SQC G5	9
40**	719F0604*	Support, Boom Pedal	REF
41	S01-312CA25-25	SCR, HHCS 0.3125-18 X 1.25, ST Z G5	2
42	N04-250C000-25	Nut, HEX 0.25-20, ST SQC G5	8
43	WAN-25NX000-20	WSH, FL TYPA-NRW 0.25, ST Z	9
44	W07-250X000-20	WSH, LCK, MED SPLT 0.25, ST Z	9
45	**708A2416-1**	Swing Brake ASSY (see page 86)	1
46	1222-225	1/8 Cable Sleeve	1
47	S18-250C750-H2	SCR, BHSHCS 0.25-20 X 0.75, ST SQC	8
48**	12186-1	Chain, #3 Twin Loop	40''
49**	720-0549	Harness, Seat	1

* ITEM SUPPLIED WITH CAB.
^ ITEM INCLUDED IN 719-0200.
* ITEM NOT SHOWN IN ILLUSTRATION.

WHEN ORDERING PARTS, SPECIFY MODEL NUMBER, SERIAL NUMBER AND DESCRIPTION OF PARTS REQUIRED

REF	PART NO.	DESCRIPTION	QTY
	T150054 (Rev. D)	*Upper Cab Assembly, 2017*	
50**	720-0165	Harness, Valve Single Mode Boom	1
51	T156183	Decal, Fuse Block, Upper TC Cab	1
52	12400-940	Decal, Lube/Throttle	1
53	SL5-190C500-20	SCR, CREC RND MS 10-24 X 0.50, ST SQC	4
54	WAR-187X000-22	WSH, FL TYPA-REG 0.1875, ST Z	4
55	W07-190X000-20	WSH, LCK, MED SPLT 10, ST SQC	4
56	1219-685	Adapter, MJIC-4/MNPT-2	1
57	1222-184	Plastic Tie	7
58	200B2007-54	Clamp 5/8 DBL	2
59	1222-202	Plastic Tie	6
60	1240-91	Clamp P, 1.5 DIA	1
61	1240-59	Clamp, 2'' I.D	1
62	1222-359	Cup Holder	1
63	719-0453	Gasket	1
64	12202-1	Tubing, -4, Black	108''
65	502-00191	Hose ASSY-Swing BRG Lube	1
66	12179-1	Tube, Yellow	144''
67**	719-0480*	Fire EXT. MTG Bracket	REF
68**	**719A0432**	Defroster Hose Kit (see page 88)	1
69	717-1220	Wave Spring	1
70	1219-943	Elbow, 90, MJIC-4/MNPT-2	1
71	SHF-250C750-25	SCR, HHCS FT 0.25-20 X 0.75, ST Z G5	4

* ITEM SUPPLIED WITH CAB.
^ ITEM INCLUDED IN 719-0200.
* ITEM NOT SHOWN IN ILLUSTRATION.

WHEN ORDERING PARTS, SPECIFY MODEL NUMBER, SERIAL NUMBER AND DESCRIPTION OF PARTS REQUIRED

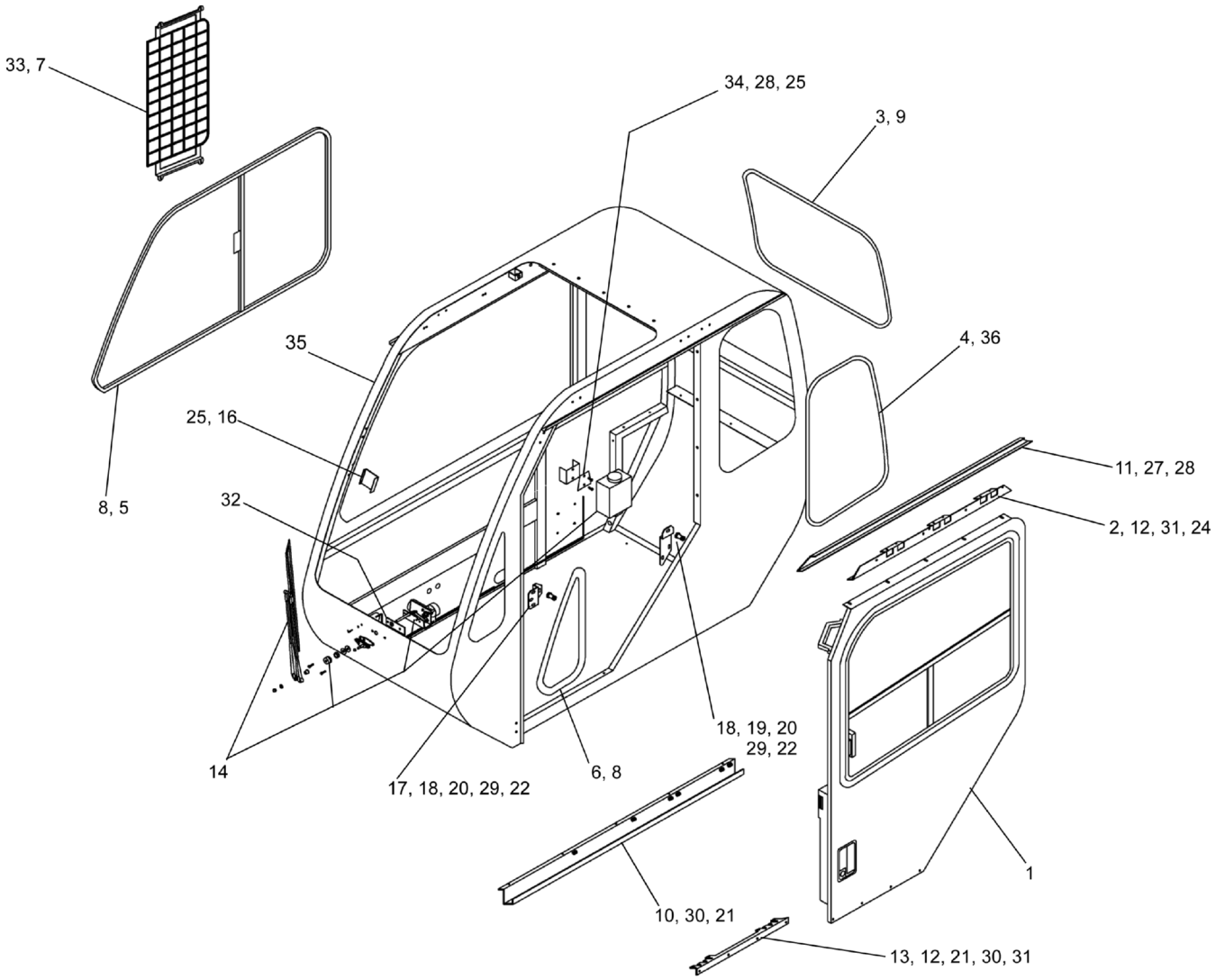

WHEN ORDERING PARTS, SPECIFY MODEL NUMBER, SERIAL NUMBER AND DESCRIPTION OF PARTS REQUIRED

LOAD KING BY CUSTOM TRUCK ONE SOURCE

OPERATOR'S CAB (UPPER) (EXPORT & DOMESTIC)

DATE: Released 08-2018

MODEL: 480-126

PAGE: 61

CHAPTER

1

REF	PART NO.	DESCRIPTION	QTY
	T120173 (Rev. E)	*Cab, Operators*	
1	**219087**	Door Assembly (see page 63)	1
2	219088	Bracket, Upper Roller	1
3	216871	Glass - Rear	1
4	216360	Glass - LH Rear	1
5	219108	Window, Sliding RH	1
6	216363	Glass, LH Front	1
7	220606	Guard, Window	1
8	215595	Windshield Seal - Large	18FT
9	215596	Window Seal (1/8" Offset)	9 FT
10	219089	Track, Lower Roller	1
11	219090	Track, Upper Roller	1
12	219091	Bearing, Sealed Roller	19
13	219092	Bracket, Lower Roller	1
14	Wiper ASSY	Wiper Assembly, Front	1
16	216370	Wiper Blade Rest	1
17	219282	Striker Bolt Bracket	1
18	216372	Striker Bolt	2
19	216373	Striker Bolt Bracket, Rear	1
20	216393	Screw, 3/8-16 X 3/4", HXFLG, YZC	2
21	216374	Screw, 3/8-16 X 3/4", SOCBTN, YZ	9
22	215975	Screw, 5/16-18 X 3/4", HXFLG, YZ	5
23**	216377	Screw, #8 x 5/8, PHIL, MS	4
24	216378	Screw, 1/4-20 X 1/2", HXFLG, YZC	5
25	215217	Screw, 10-24 x 1/2", PHPA, YZC	4
26**	216911	Insert, 10-24 AKS4-1024-13	4
27	215115	Nut, Lock, 10-32, NYL, Zinc	5
28	215212	Washer, Flat, #10, YZC	6
29	215223	Washer, Flat, 5/16	4
30	220581	Washer, 3/8, Flat, YZC	9
31	216438	Screw, SHLDR, 3/8ØX3/8 Long, SS	19
32	216869	Shim	1
33	216904	Screw, #10-24 X 1/2, PHPA, SS, BLACK	4
34	215212	Washer, Flat, #10, YZC	1
35	220607	Cab Weldment	1
36	216874	Windshield Seal, Small	9 FT
37**	**T120173_Section2***	Cab, Operators (see page 65)	REF
38**	**T120173_Section3***	Cab, Operators (see page 67)	REF
39**	**T120173_Section4***	Cab, Operators (see page 69)	REF
40**	**T120173_Section5***	Cab, Operators (see page 71)	REF
41**	**T120173_Section6***	Cab, Operators (see page 73)	REF
42**	**T120173_Section7***	Cab, Operators (see page 75)	REF
43**	**T120173_Section8***	Cab, Operators (see page 77)	REF

* NOT PURCHASABLE AT THIS LEVEL
** ITEM NOT SHOWN IN ILLUSTRATION

WHEN ORDERING PARTS, SPECIFY MODEL NUMBER, SERIAL NUMBER AND DESCRIPTION OF PARTS REQUIRED

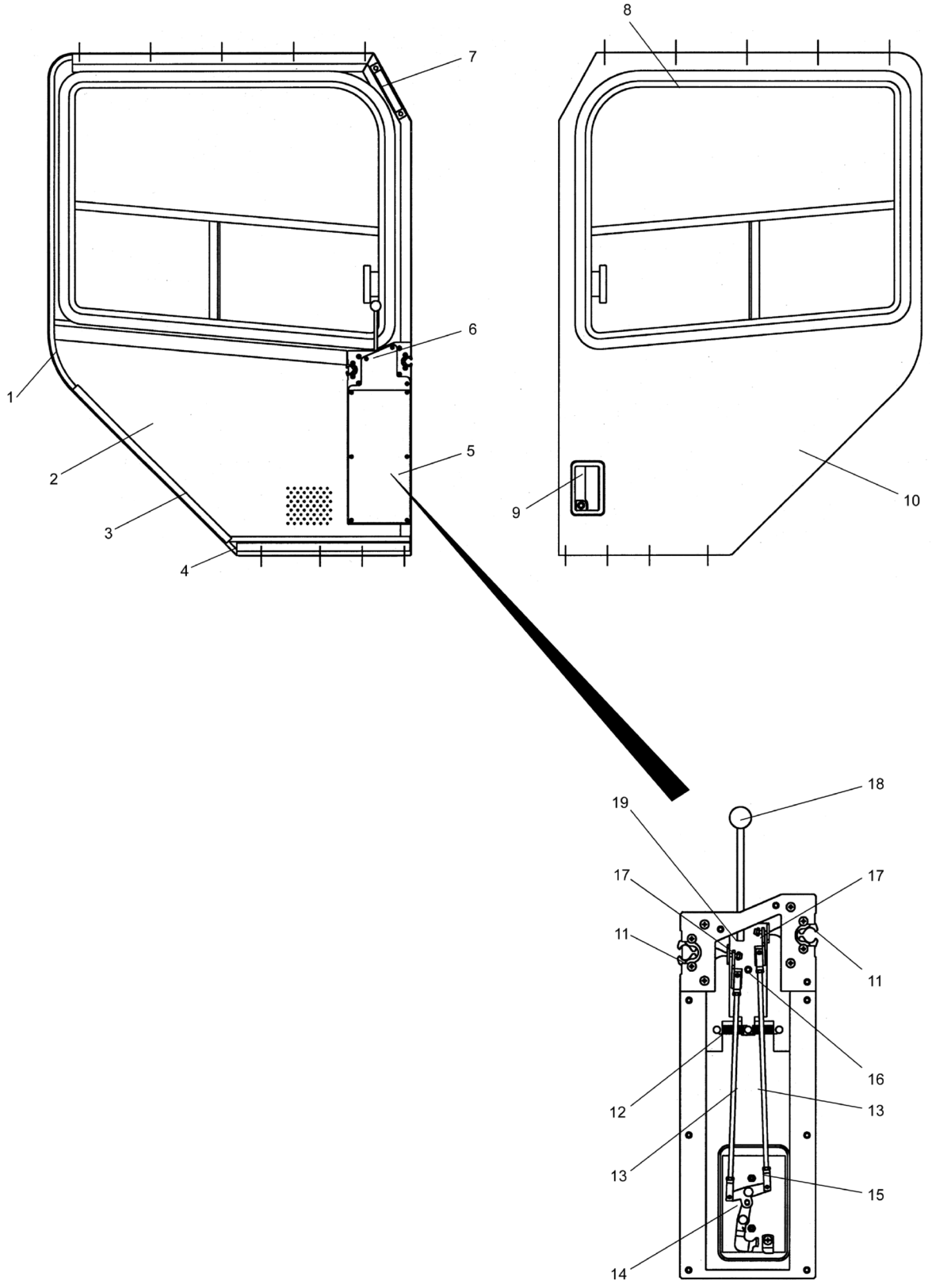

WHEN ORDERING PARTS, SPECIFY MODEL NUMBER, SERIAL NUMBER AND DESCRIPTION OF PARTS REQUIRED

REF	PART NO.	DESCRIPTION	QTY
	219087 (Rev. 00)	*Door Assembly*	
1	216445	Trim Seal	4FT
2	216430	Foam, Door	1
3	216390	Trim Seal	3FT
4	219111	Filler, Door Channel	1
4.1*	215212	Washer, Flat, #10, YZC	4
4.2*	216911	Insert, 10-24 AKS4-1024-13	4
4.3*	215217	Screw, 10-24 x 1/2", PHPA, YZC	3
5	216432	Cover, Lower Latch Box	1
5.1*	216911	Insert, 10-24 AKS4-1024-13	2
5.2*	215217	Screw, 10-24 x 1/2", PHPA, YZC	2
6	216431	Cover, Upper Latch Box	1
6.1*	216911	Insert, 10-24 AKS4-1024-13	3
6.2*	215217	Screw, 10-24 x 1/2", PHPA, YZC	3
7	215603	Grab Handle	1
7.1*	215215	Screw, 1/4-20 X 3/4", PHPA, YZ	2
8	216429	Window, Sliding - Door	1
8.1*	215595	Windshield Seal - Large	12FT
9	216435	Latch, Rotary Paddle	REF
10	219110	Door Weldment	1
11	215088	DBLRTR Hold Open	1
11.1*	215215	Screw, 1/4-20 X 3/4", PHPA, YZ	4
12	216442	Spring, Extension	2
13	216443	Rod, LH	2
14	216435	Latch, Rotary Paddle	1
15	216436	Link Pin and Clip	4
15.1*	216437	Shackle	4
15.2*	215086	HEX Nut, 1/4-20	4
16	216438	Screw, SHLDR, 3/8ØX3/8 Long, SS	1
16.1*	216439	Washer, 3/8" Brass	2
17	216441	Shackle Mount, LH/RH	2
17.1*	216447	Locknut, 1/4-20, NYL	2
18	216446	Knob, Handle	1
19	216440	Plate, Pivot W/Handle	1

* ITEM NOT SHOWN IN ILLUSTRATION

WHEN ORDERING PARTS, SPECIFY MODEL NUMBER, SERIAL NUMBER AND DESCRIPTION OF PARTS REQUIRED

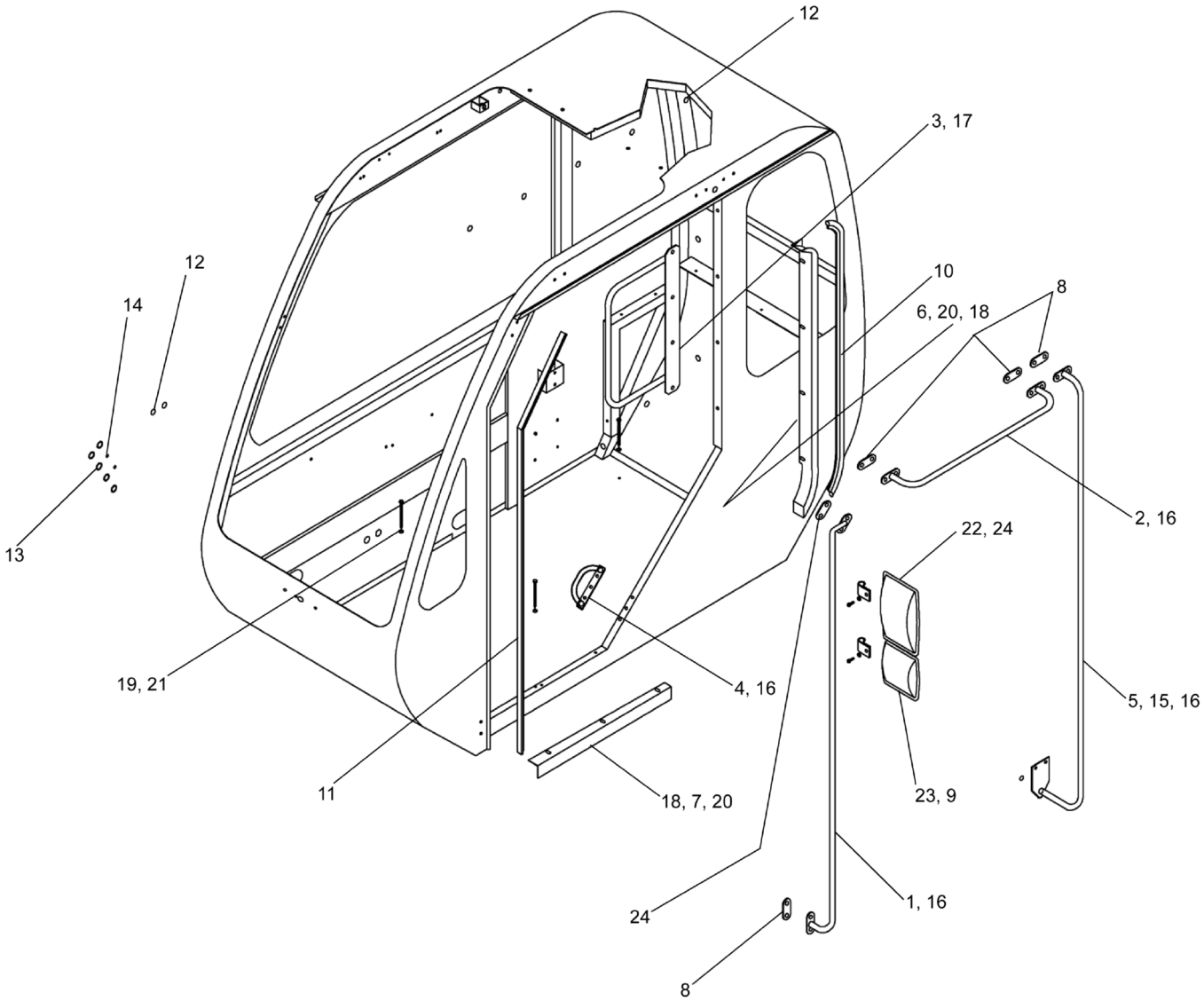
12
3, 17
12
14
10
8
6, 20, 18
13
2, 16
22, 24
19, 21
4, 16
5, 15, 16
11
18, 7, 20
23, 9
1, 16
24
8

REF	PART NO.	DESCRIPTION	QTY
	T120173_Section2* (Rev. E)	*Cab, Operators*	
1	216380	Handle/Mirror Mount BRKT WLDMNT	1
2	216381	Handle WLDMNT, Horizontal Upper	1
3	220608	Handle, Door Post	1
4	219093	Lower Handle	1
5	216384	Handle Weldment	1
6	216385	Door Sealer Strip Weldment	1
7	216386	Sealer Strip, Door	1
8	216387	Gasket, Handle Pad	4
9	216875	Mirror Assembly Kit	2
10	216389	1/8" Grip x 0.750" DIA Bulb Seal	4 FT
11	216390	Trim Seal	6 FT
12	215219	Plug, 3/4" Button, Nylon, Black	8
13	216391	3/4 -16 Hydraulic Plastic Plug	10
14	216392	3/8" NPT Plastic Plug	4
15	215228	5/8" DIA Hole Plug, Black	1
16	215975	Screw, 5/16-18 X 3/4", HXFLG, YZ	17
17	216393	Screw, 3/8-16 X 3/4", HXFLG, YZC	3
18	215215	Screw, 1/4-20 X 3/4", PHPA, YZ	7
19	216394	Screw, LAG, 3/8 X 4", Zinc	4
20	216396	Washer, Flat, 1/4", YZC	7
21	216397	Washer, Flat, 5/16", Zinc	4
22	216876	Mirror, Upper 6.5 X 10 Stainless	1
23	216877	Mirror, Lower 6.5 X 6 Stainless	1
24	216878	Gasket, Handle Pad	1

* NOT PURCHASABLE AT THIS LEVEL

WHEN ORDERING PARTS, SPECIFY MODEL NUMBER, SERIAL NUMBER AND DESCRIPTION OF PARTS REQUIRED

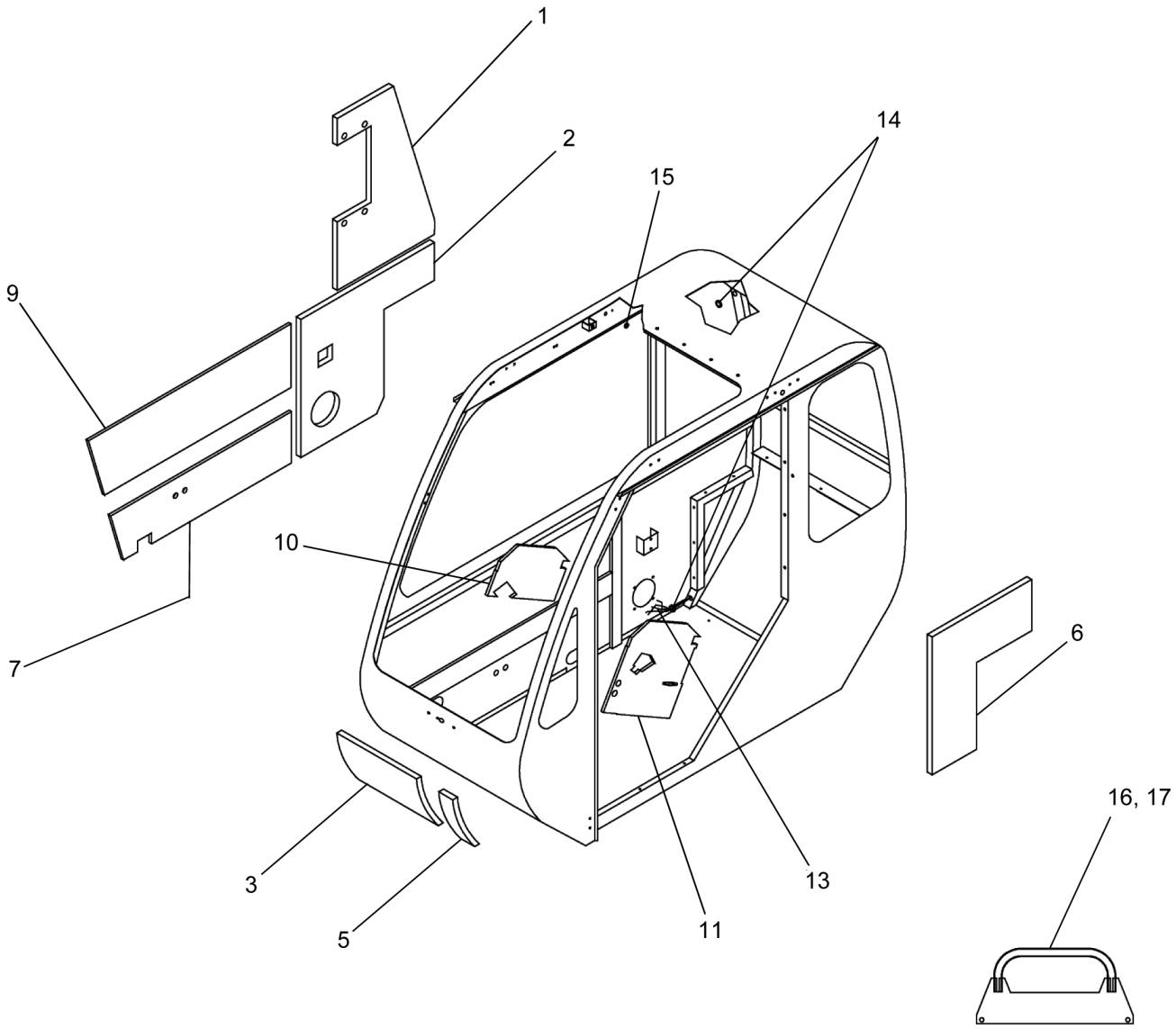
1
2
14
15
9
10
7
6
16, 17
3
5
13
11

REF	PART NO.	DESCRIPTION	QTY
	T120173_Section3* (Rev. E)	*Cab, Operators*	
1	216398	Foam - RH, Rear, Upper	1
2	220609	Foam - RH, Rear, Lower	1
3	216400	Foam - Front, RH	1
5	216402	Foam - Front, LH	1
6	216403	Foam - LH, Rear, Lower	1
7	216404	Foam - RH, Lower	1
9	220610	Foam - RH, Above Console	1
10	216407	Foam - Dash RH	1
11	216408	Foam - Dash, LH	1
13	216409	Wiring Harness	1
14	215613	Grommet, 5/8" Diameter Hole	2
15	216411	Grommet, 3/8" Diameter Hole	1
16	219095	Grab Handle	1
17	215975	Screw, 5/16-18 X 3/4", HXFLG, YZ	2

* NOT PURCHASABLE AT THIS LEVEL

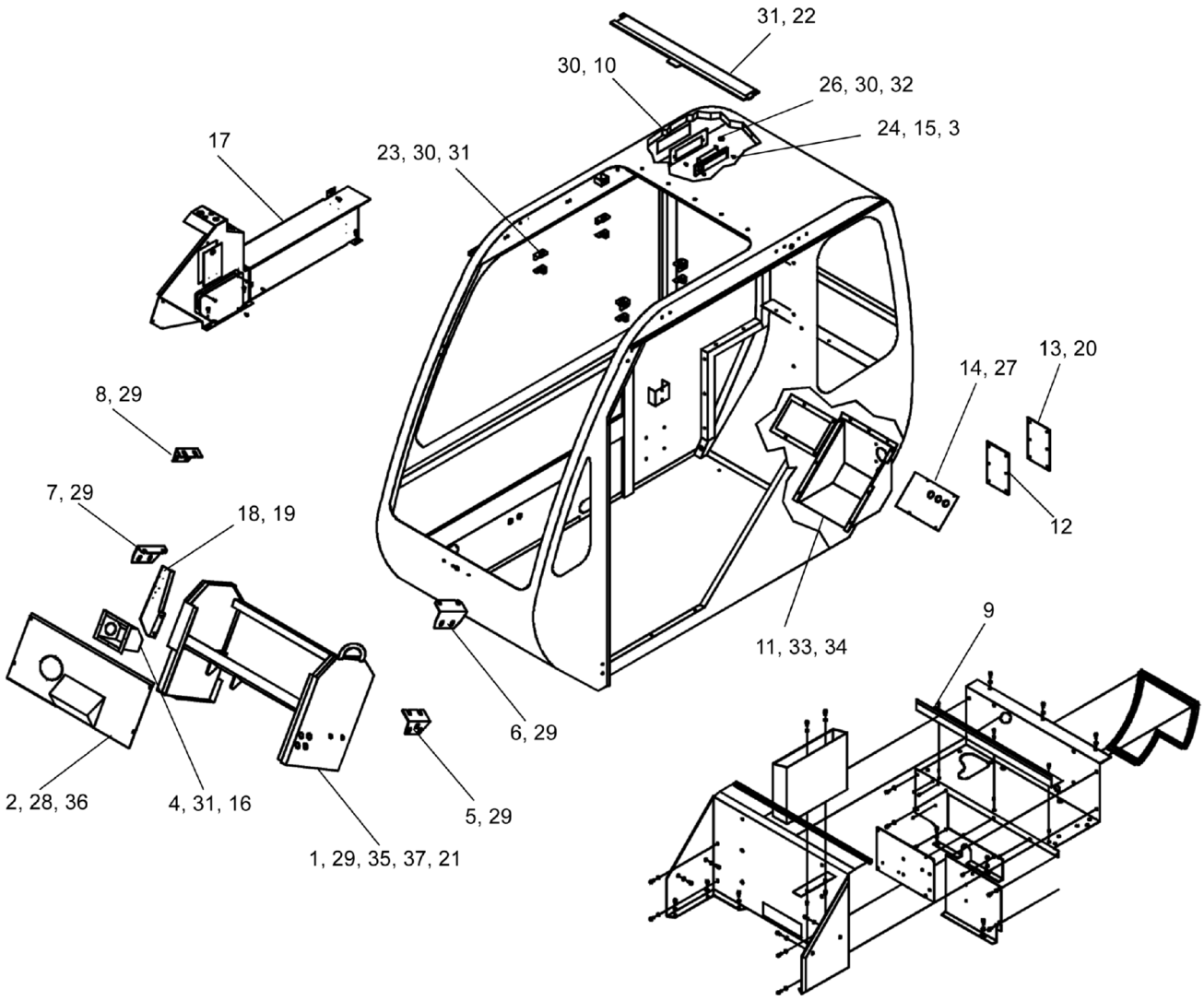
31, 22
30, 10
26, 30, 32
24, 15, 3
17
23, 30, 31
13, 20
14, 27
8, 29
7, 29
18, 19
12
11, 33, 34
9
6, 29
2, 28, 36
4, 31, 16
5, 29
1, 29, 35, 37, 21

REF	PART NO.	DESCRIPTION	QTY
	T120173_Section4* (Rev. E)	*Cab, Operators*	
1	216412	Dash Frame Weldment	1
2	216413	Dash Cover Weldment	1
3	216377	Screw, #8 x 5/8, PHIL, MS	3
4	216414	Defroster Plenum	1
5	216415	Bracket, Dash LH, Lower	1
6	216416	Bracket, Dash LH, Upper	1
7	216417	Bracket, Dash RH, Lower	1
8	216418	Bracket, Dash RH, Upper	1
9	219097	A/C Shelf Assembly	1
10	219098	Cover, Access-Dome Light	1
11	220611	Heater Box Assembly	1
12	220612	Gasket	1
13	220613	Cover Plate, Heater Box	1
14	223400	Rear Cover	1
15	216885	BUTT Splice 14 GA	1
16	216861	Grommet, 1/2 OD, 1/4 ID	1
17	223401	Cableway Assembly	1
18	220615	Mounting Plate, Fire Extinguisher	1
19	220616	Screw, 5/16-18 x 1, HXFLG, YZ	2
20	220127	Screw, #10-24 X 3/4", PHPA, SS	6
21	215223	Washer, Flat, 5/16	10
22	216423	Blind, Roller-Corbeau Mat	1
23	216424	Bracket Assembly, Shade Clips	4
24	215615	Courtesy Lamp Assembly	1
25**	216855	Terminal, Heat Shrink	1
26	216411	Grommet, 3/8" Diameter Hole	1
27	223402	Screw, 1/4-20 X 3/4", PHPA, SS	4
28	215215	Screw, 1/4-20 X 3/4", PHPA, YZ	4
29	215975	Screw, 5/16-18 X 3/4", HXFLG, YZ	18
30	215238	Screw, 8-32 X 1/2", PHFL, YZ	20
31	215217	Screw, 10-24 x 1/2", PHPA, YZC	14
32	216395	Insert, 1/4-20 AKS4-420-165	2
33	216856	Screw, #10-32 x 1", PHPA, SS	9
34	223403	Washer, Flat #10, SS	9
35	215225	Nut, HEX, 5/16-18, Z	8
36	216928	Washer - 1/4" Flat, SS, Black	4
37	215224	Washer, Lock, 5/16, YZ	8

* NOT PURCHASABLE AT THIS LEVEL
** ITEM NOT SHOWN IN ILLUSTRATION

WHEN ORDERING PARTS, SPECIFY MODEL NUMBER, SERIAL NUMBER AND DESCRIPTION OF PARTS REQUIRED

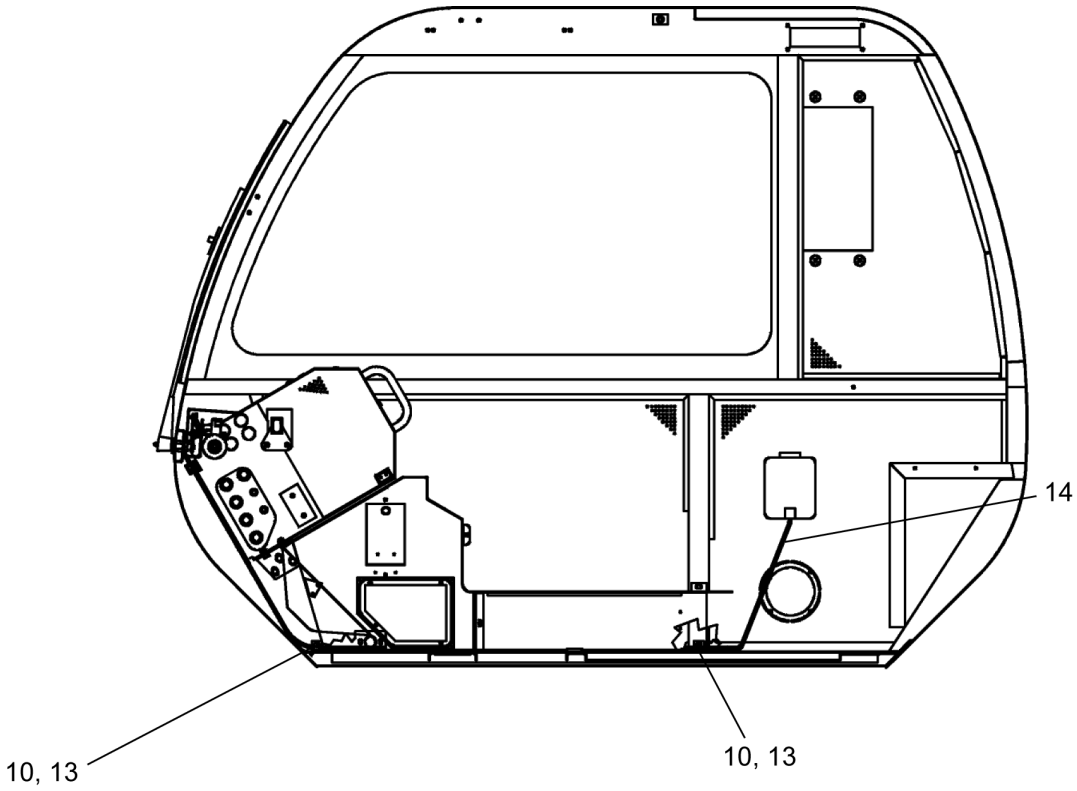
14
10, 13
10, 13

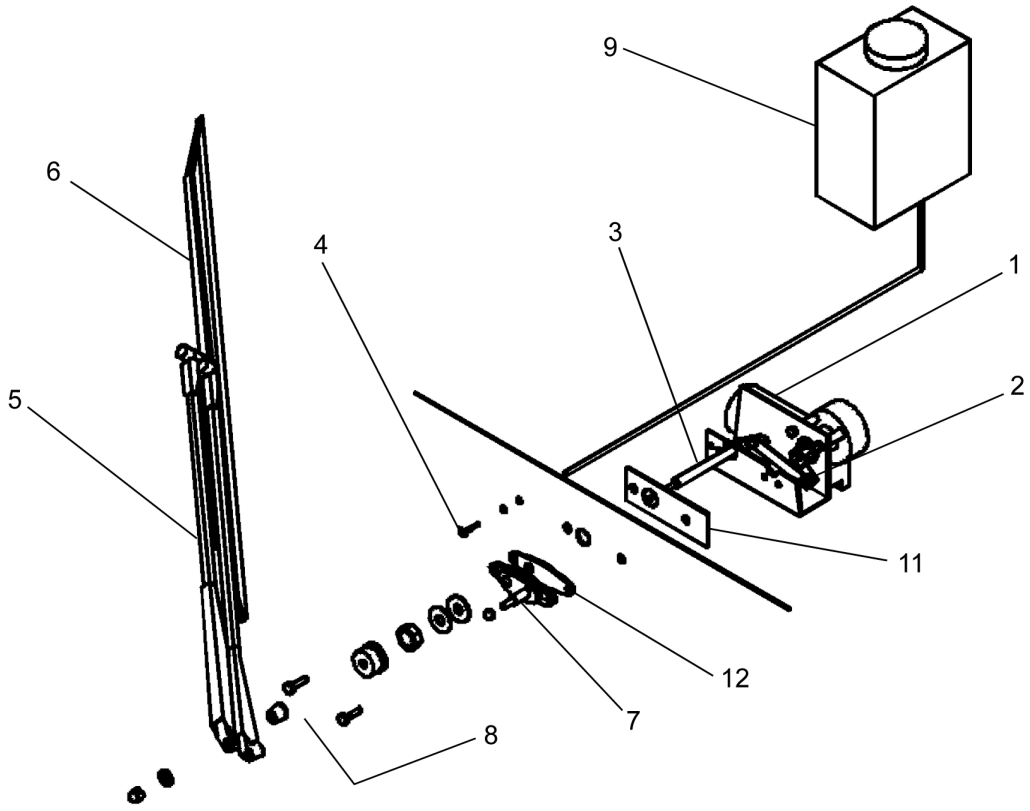
9
6
4
3
1
5
2
11
12
7
8

REF	PART NO.	DESCRIPTION	QTY
	T120173_Section5* (Rev. E)	*Cab, Operators*	
1	216744	WJ 2-Speed Motor Kit W/Hardware (12V)	1
2	216864	Drive Arm, 62°	1
3	216746	Pivot Shaft, 2"	1
4	216865	Grommet - Wet Arm Tubing	1
5	216866	Arm, Pantograph Black, 24", Wet	1
6	216745	Flex Blade, 28" - Black	1
7	216740	Pantograph Kit, Black	1
8	216867	Screw, 1/4-28 x 1-1/2", HXHD, SS, BLK	2
9	216868	Reservoir Kit, Denso (12V)	1
10	216857	Cable Clips	2
11	216869	Shim	1
12	216870	Gasket, Pantograph Kit	1
13	216862	Wire Tie	2
14	216942	Hose, 5/32, Washer	10

* NOT PURCHASABLE AT THIS LEVEL

WHEN ORDERING PARTS, SPECIFY MODEL NUMBER, SERIAL NUMBER AND DESCRIPTION OF PARTS REQUIRED

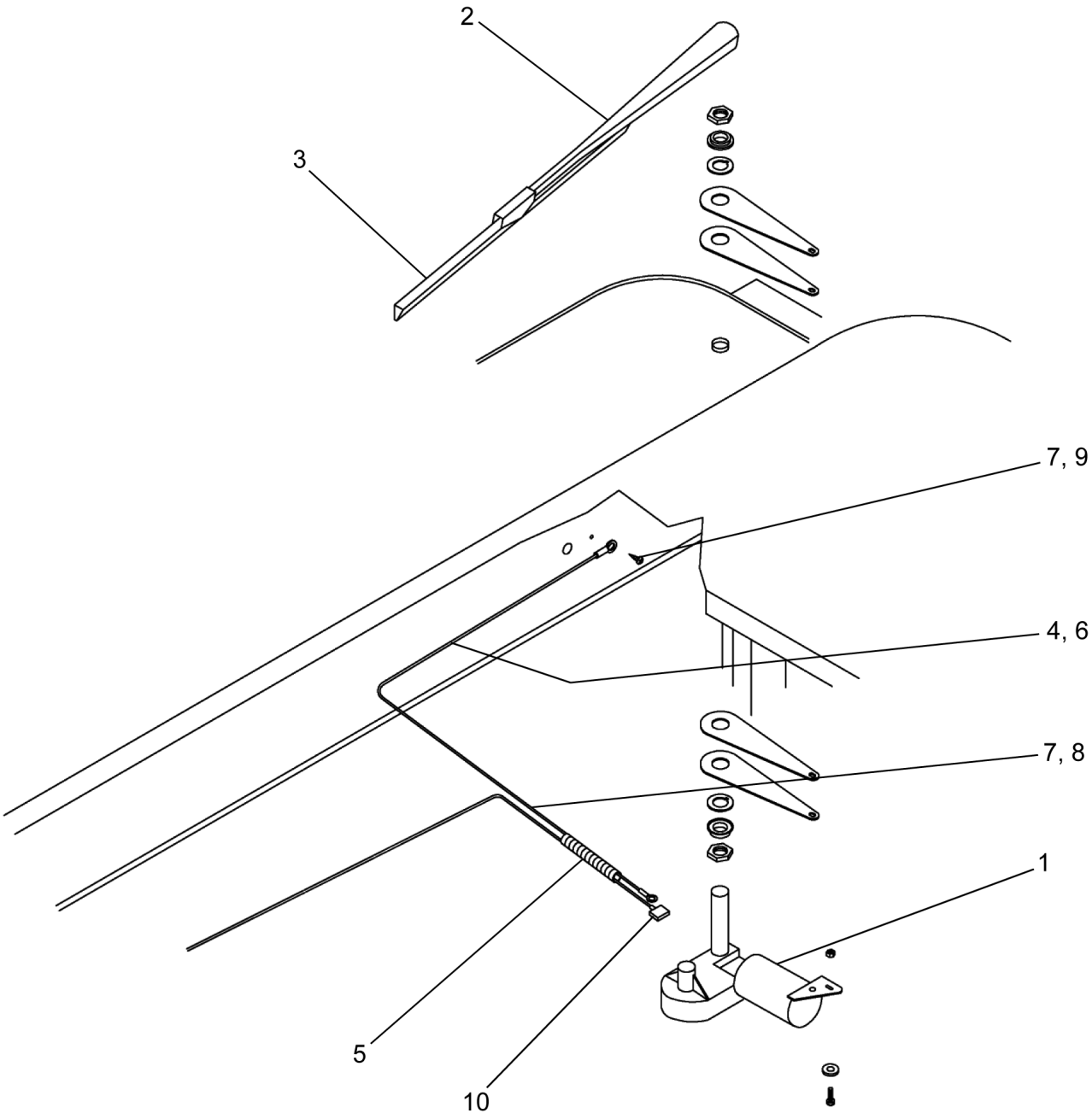

WHEN ORDERING PARTS, SPECIFY MODEL NUMBER, SERIAL NUMBER AND DESCRIPTION OF PARTS REQUIRED

LOAD KING BY CUSTOM TRUCK ONE SOURCE

CAB ROOF WIPER ASSEMBLY - SECTION 6

DATE: Released 08-2018

MODEL: 480-126

PAGE: 73

CHAPTER 1

REF	PART NO.	DESCRIPTION	QTY
	T120173_Section6* (Rev. E)	*Cab, Operators*	
1	216852	Wiper Motor Assembly	1
2	216853	Arm ADJ 10.75" - 15" Black	1
3	216854	Flex Blade, 18"	1
4	216855	Terminal, Heat Shrink	1
5	216863	Loom	1.5
6	216410	Ground Wire	1
7	215218	Screw, S/T #10 X 1/2 SLT HX, Z	3
8	220623	Steel Loop Strap Rubber - Cushioned	2
9	215216	Terminal Eye INS 0.25" 14 GA	3
10	216858	Terminal, Female	1

* NOT PURCHASABLE AT THIS LEVEL

WHEN ORDERING PARTS, SPECIFY MODEL NUMBER, SERIAL NUMBER AND DESCRIPTION OF PARTS REQUIRED

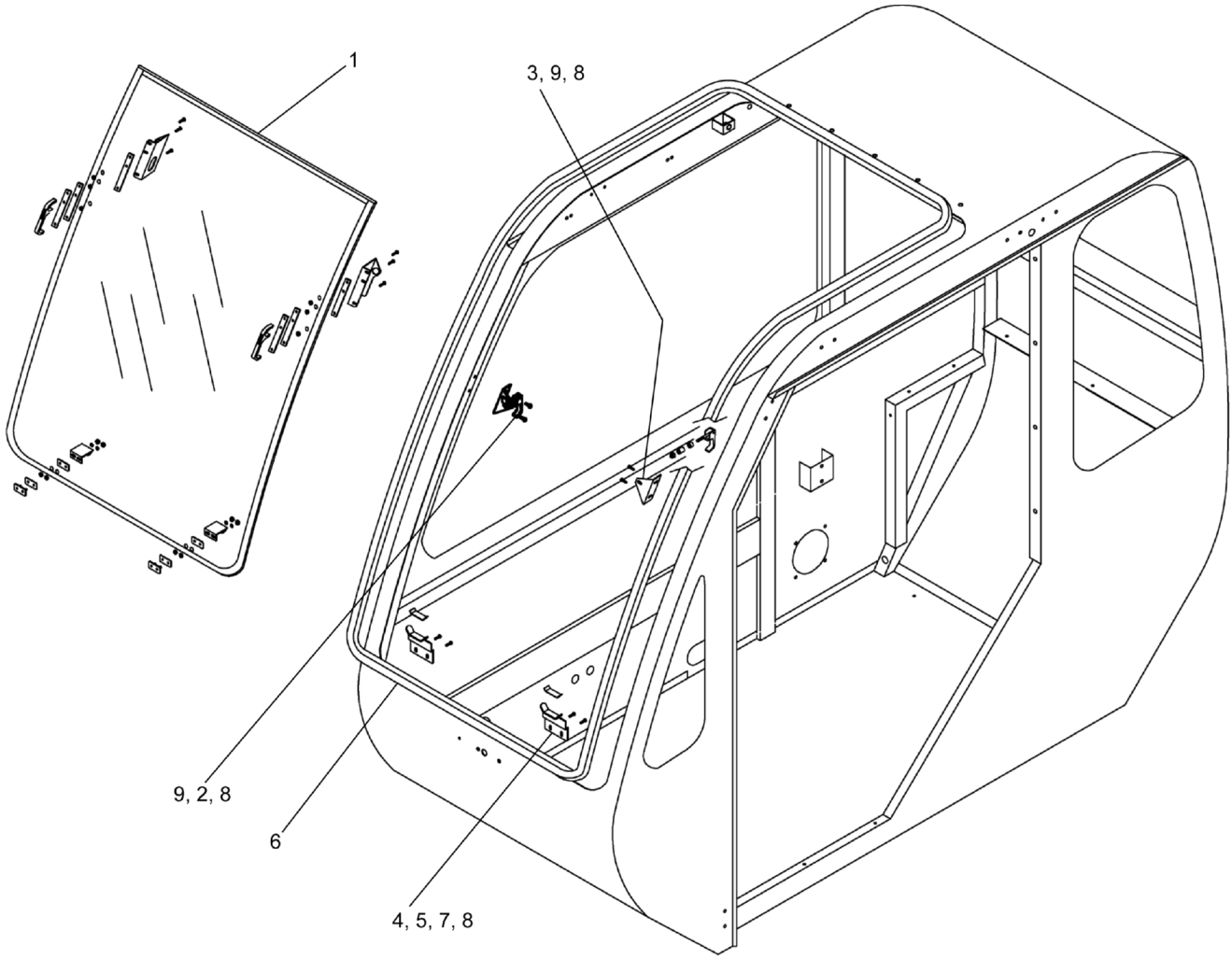

WHEN ORDERING PARTS, SPECIFY MODEL NUMBER, SERIAL NUMBER AND DESCRIPTION OF PARTS REQUIRED

LOAD KING BY CUSTOM TRUCK ONE SOURCE

OPERATOR'S CAB (FRONT WINDSHIELD - SECTION 7)

DATE: Released 08-2018

MODEL: 480-126

PAGE: 75

CHAPTER

1

REF	PART NO.	DESCRIPTION	QTY
	T120173_Section7* (Rev. E)	*Cab, Operators*	
1	220624	Production Windshield	1
2	223396	Latch Bracket, Windshield - RH	2
3	223397	Latch Bracket, Windshield - LH	2
4	216895	Bracket - Windshield Clip	2
5	220625	Washer, Lock, 1/4, SS	4
6	220171	Seal, Trim, 3/4 Bulb	18′
7	220626	175B-3 X 1/16, BLK Trim	4″
8	220627	Screw, 1/4-20 X 5/8, HX, SS, BLK	8
9	223395	Latch	2

* NOT PURCHASABLE AT THIS LEVEL

WHEN ORDERING PARTS, SPECIFY MODEL NUMBER, SERIAL NUMBER AND DESCRIPTION OF PARTS REQUIRED

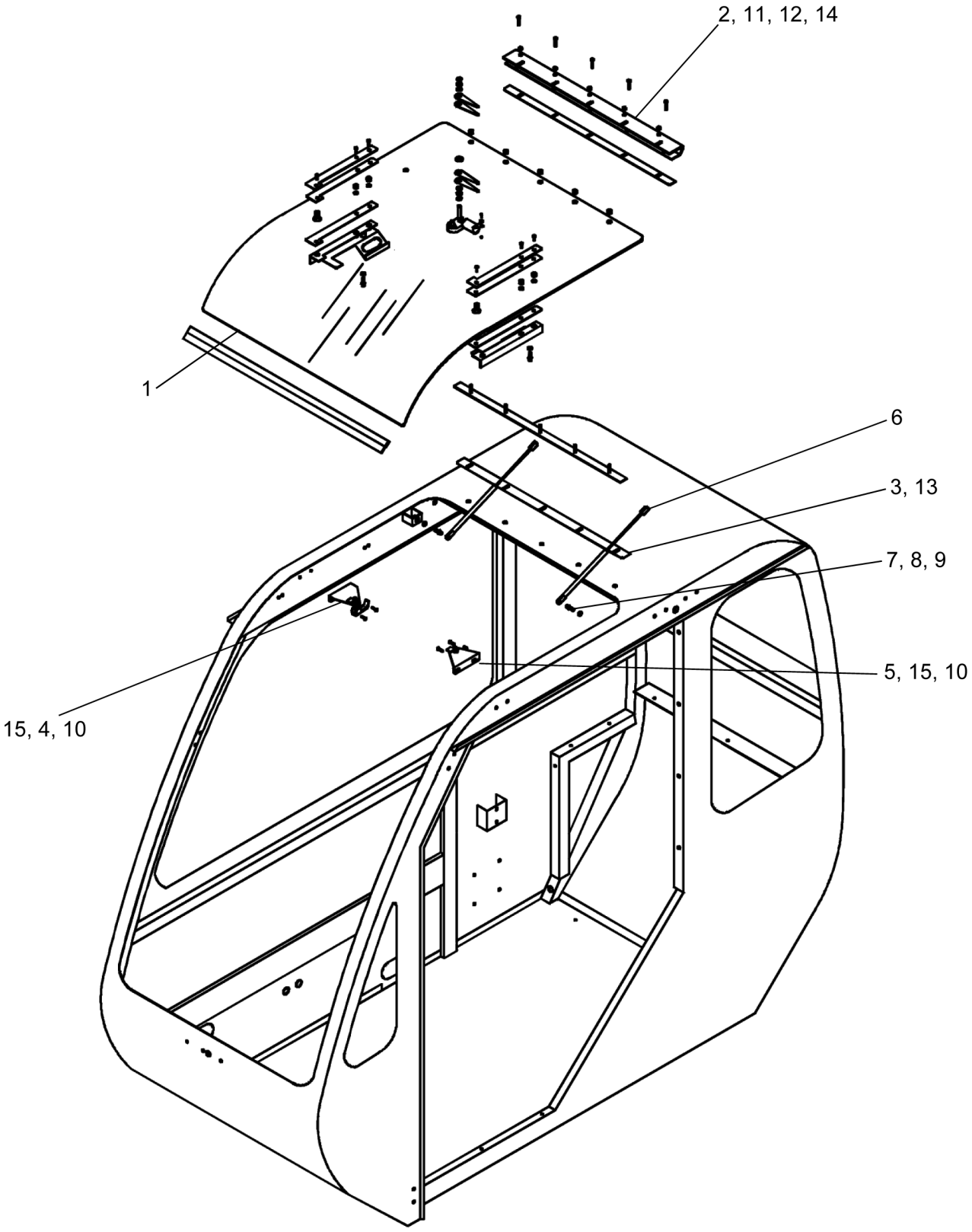

WHEN ORDERING PARTS, SPECIFY MODEL NUMBER, SERIAL NUMBER AND DESCRIPTION OF PARTS REQUIRED

LOAD KING BY CUSTOM TRUCK ONE SOURCE

OPERATOR'S CAB (ROOF HATCH - SECTION 8)

DATE: Released 08-2018

MODEL: 480-126

PAGE: 77

CHAPTER 1

REF	PART NO.	DESCRIPTION	QTY
	T120173_Section8* (Rev. E)	*Cab, Operators*	
1	220628	Hatch Production	1
2	216915	Hatch Hinge	1
3	216918	Gasket - Hatch Hinge, Cab	1
4	223398	Latch Keeper, Steel - RH	1
5	223399	Latch Keeper, Steel - LH	1
6	216920	Spring, Gas	2
7	216919	Ball Studs W/5/16-18 Thread	2
8	215223	Washer, Flat, 5/16	4
9	215224	Washer, Lock, 5/16, YZ	4
10	220627	Screw, 1/4-20 X 5/8, HX, SS, BLK	4
11	216924	Nut, Lock, 1/4-20, NYL, SS, BLK	5
12	216926	Screw, 1/4-20X1, SLT WH, SS, BLK	5
13	216927	1/16 X 3/4 BLK Foam Mounting Tape	5"
14	216928	Washer - 1/4" Flat, SS, Black	5
15	223395	Latch	2

* NOT PURCHASABLE AT THIS LEVEL

WHEN ORDERING PARTS, SPECIFY MODEL NUMBER, SERIAL NUMBER AND DESCRIPTION OF PARTS REQUIRED

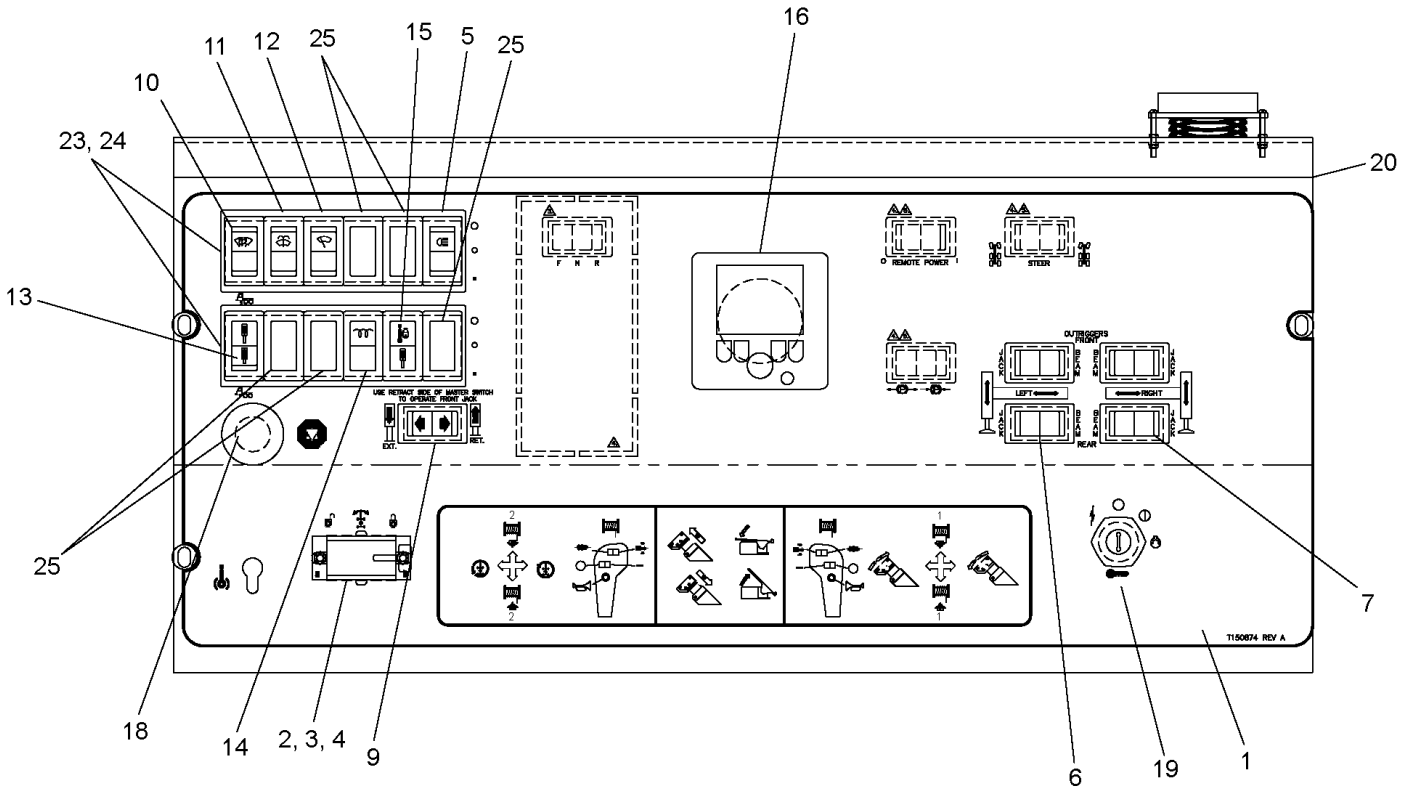

WHEN ORDERING PARTS, SPECIFY MODEL NUMBER, SERIAL NUMBER AND DESCRIPTION OF PARTS REQUIRED

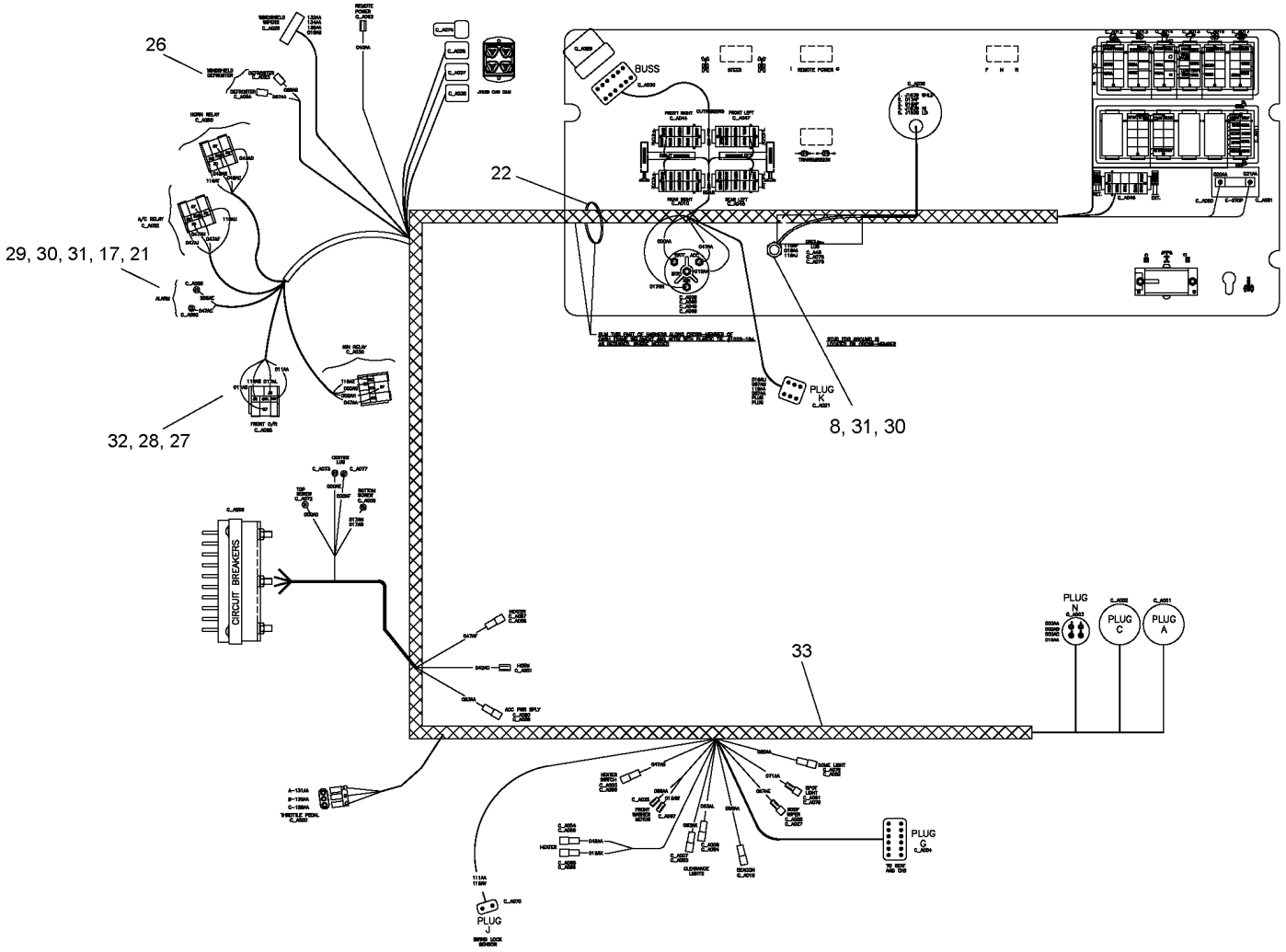

WHEN ORDERING PARTS, SPECIFY MODEL NUMBER, SERIAL NUMBER AND DESCRIPTION OF PARTS REQUIRED

REF	PART NO.	DESCRIPTION	QTY
	T150055 (Rev. B)	*Upper Dash Assembly, 2017*	
1	T150874	Decal, Dash	1
2	719-0201	Switch, Swing Lock	1
3	SHF-250C500-25	SCR, HHCS FT 0.25-20 X 0.50, ST SQC G5	2
4	W07-250X000-20	WSH, LCK, MED SPLT 0.25, ST Z	2
5	1223-1011	SW Head Light	1
6	1223-997	SW, Rocker Outrig	2
7	1223-998	SW Rocker Outrig	2
8	S01-375CB50-25	Capscrew, .38C X 2.50	1
9	1223-996	SW, Rocker Or Master	1
10	1223-1002	SW Rocker Defrost	1
11	1223-1030	SW Rocker Washer	1
12	1223-1029	SW Rocker Wiper	1
13	1223-1044	SW, Rocker FRT Jack	1
14	T150669	Indicator, SVR, WTS	1
15	T150670	Indicator, SVR, SWLK, JACK EXT	1
16	T137151	Display Engine	1
17	709-6827	Bracket	1
18	1223-981	EI-Stop Switch	1
19	1223-858	Switch, Ignition (CH751)	1
20	T150267	Panel, Dash Panel	1
21	450-0006	Alarm	1
22	1222-184	Plastic Tie	20
23	1223-1004	Gang Mount Center	8
24	1223-1005	Gang Mount End	4
25	1223-1006	Plug	5
26	1223-626	Fan, Defrost	1
27	1230-6	KIPS, #10-24	4
28	1202-5	Screw, Machine, .19C X .38	4
29	SHF-375CA00-25	HHCS 3/8 NC X 1 GR5 Zinc	2
30	W07-375X000-20	Washer Lock 3/8 MED	3
31	N04-375C000-25	Nut, HEX 0.375- 16, ST Z GR5	4
32	441-6828	Relay	4
33	T150389	Harness.Upper Cab,2017	1

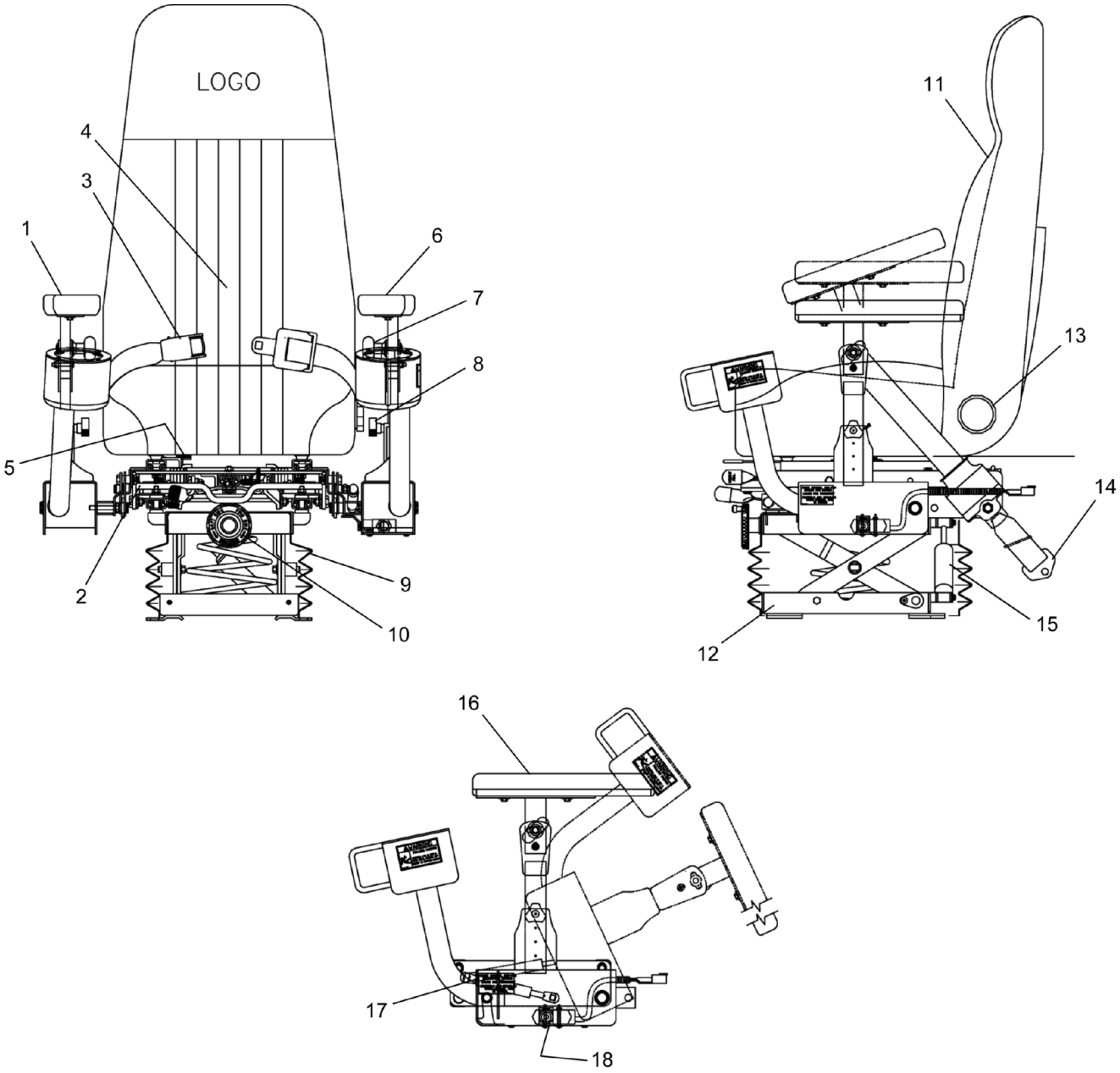

WHEN ORDERING PARTS, SPECIFY MODEL NUMBER, SERIAL NUMBER AND DESCRIPTION OF PARTS REQUIRED

REF	PART NO.	DESCRIPTION	QTY
	719-0200 (Rev. C)	*Seat, Upper*	
1	217777	Right Hand Arm Pad	1
2	217786	MECH. HGT. Riser	1
3	217780	Lap Belt	1
4	217781	Cushion Cover	1
5	222422	Seat Adjustment Tracks Set	1
6	217778	Left Hand Arm Pad	1
7	217783	Arm Pivot ADJ. Knob	1
8	217794	Arm ADJ. Knob	1
9	217784	Bellows	1
10	217785	Weight ADJ. Knob	1
11	217787	Back Cover	1
12	217791	Heavy Duty Low Profile Suspension	1
13	217788	Recliner Knob	1
14	217789	Tether Kit	1
15	223131	Heavy Duty Shock Absorber	1
16	217779	Set of Arm Pads	1
17	217792	Gas Spring W/HDWA	1
18	217793	Kit, Switch For Left Arm Only	1
18A	227022	Kit, Switch For Left Arm Only	1

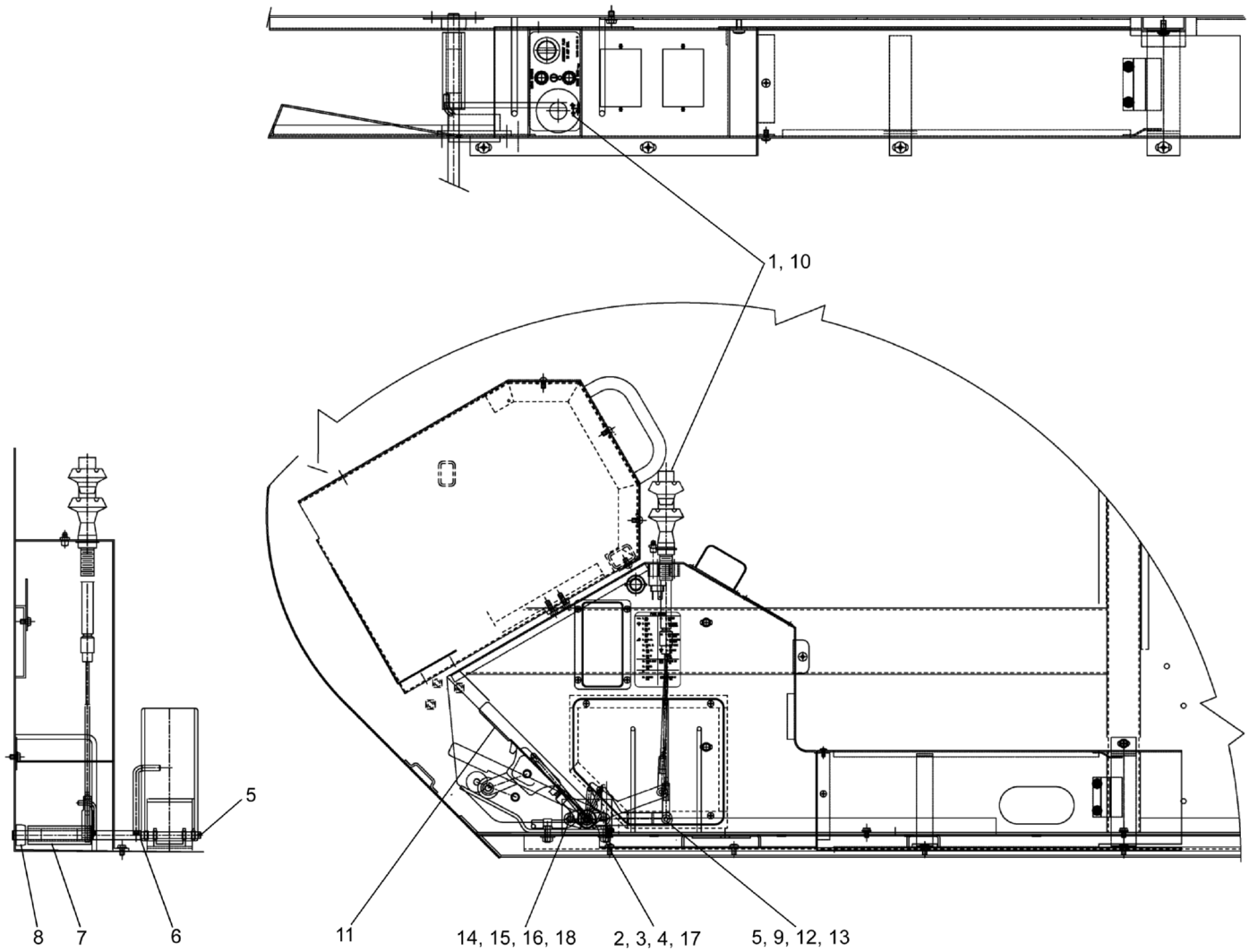

WHEN ORDERING PARTS, SPECIFY MODEL NUMBER, SERIAL NUMBER AND DESCRIPTION OF PARTS REQUIRED

LOAD KING BY CUSTOM TRUCK ONE SOURCE

THROTTLE CONTROLS UPPER

DATE: Released 08-2018

MODEL: 480-126

PAGE: 84

CHAPTER

1

REF	PART NO.	DESCRIPTION	QTY
	719A0408 (Rev. E)	*Throttle Control, Cab*	
1	12400-940	Decal, Lube/Throttle	REF
2	SHF-312CA00-25	SCR, HHCS FT 0.312-18 X 1.00, ST Z G5	1
3	W07-312X000-20	WSH, LCK, MED SPLT 0.3125, ST SQC	2
4	N04-312C000-2A	Nut, HEX 0.3125-18, ST SQC GA	2
5	P02-062X500-20	Pin,Cotter 0.0625 X 0.50, ST SQC	2
6	719F0421	Bellcrank	1
7	719F0423	Bellcrank Arm	1
8	1217-347	Bearing	1
9	P01-250X750-20	Pin, Clevis 0.25 X 0.75, ST SQC	1
10	719-0403	Cable, Throttle	1
11	714 0935	Foot Pedal	1
12	N04-250F000-22	Nut, HEX 0.25-28, ST SQC G2	1
13	2597	Clevis Yoke	1
14	SHF-250C750-25	SCR, HHCS FT 0.25-20 X 0.75, ST Z G5	2
15	W07-250X000-20	WSH, LCK, MED SPLT 0.25, ST Z	2
16	N04-250C000-25	Nut, HEX 0.25-20, ST SQC G5	2
17	S01-312CA25-25	SCR, HHCS 0.3125-18 X 1.25, ST Z G5	1
18	WAR-187X000-22	WSH, FL TYPA-REG 0.1875, ST Z	4

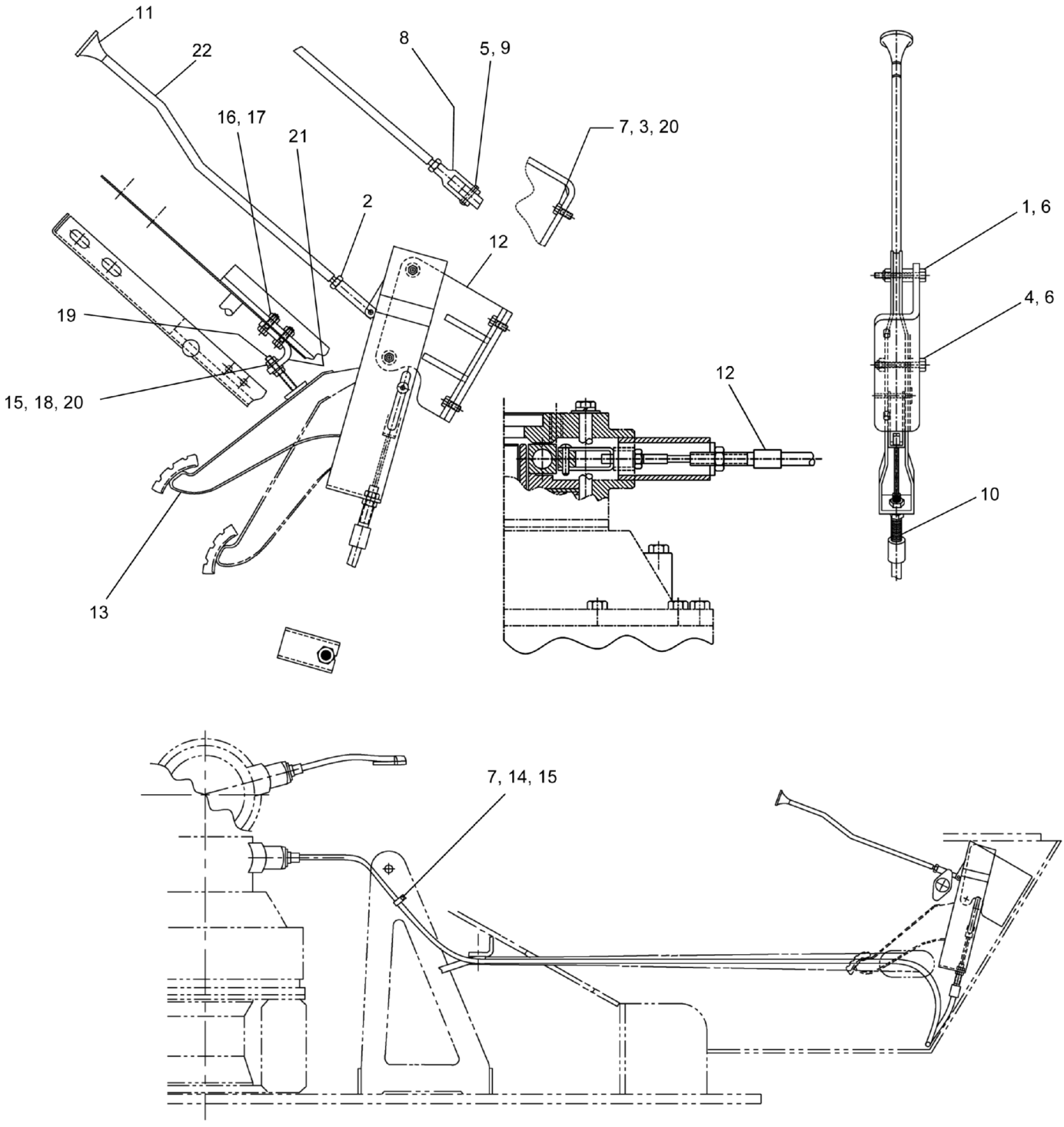

WHEN ORDERING PARTS, SPECIFY MODEL NUMBER, SERIAL NUMBER AND DESCRIPTION OF PARTS REQUIRED

REF	PART NO.	DESCRIPTION	QTY
	708A2416-1 (Rev. G)	*Swing Brake ASSY*	
1	1200-37	Capscrew .31 x 1.75	1
2	1205-14	HEX Nut 1/4-28	1
3	1200-57	HHCCS, 3/8" x 3/4"	3
4	1200-39	HHCS .31 X 2.0	1
5	1207-2	Cotter Pin	1
6	1205-34	Locknut .31	2
7	1210-20	Washer, Lock 3/8	3
8	2597	Clevis Yoke	1
9	2234	Pin	1
10	1291-181	Swing Brake Cable	1
11	1291-139	Knob	1
12	708F2465	Bracket	1
13	706-8774	Lever	1
14	200B2007-6	Clamp	1
15	1210-17	5/16 Lock Washer	1
16	1200-3	HHCS .25 x 1.0	2
17	1210-14	Lockwasher 1/4"	2
18	1205-25	5/16-18 NC Nut	2
19	1203-304	Bolt, Adjusting .31-18 X 2.12 AU-VE-CO PRODUCTS #4474	1
20	1209-3	Washer 5/16	4
21	709-3000	Bracket	1
22	714-0475	Shaft	1

REF	PART NO.	DESCRIPTION	QTY
	719A0432 (Rev. D)	*Defroster Hose Kit*	
1	719-0431	2 1/2" I.D. Flex Hose X 10' LG.	1
2	1240-291	Clamp	2

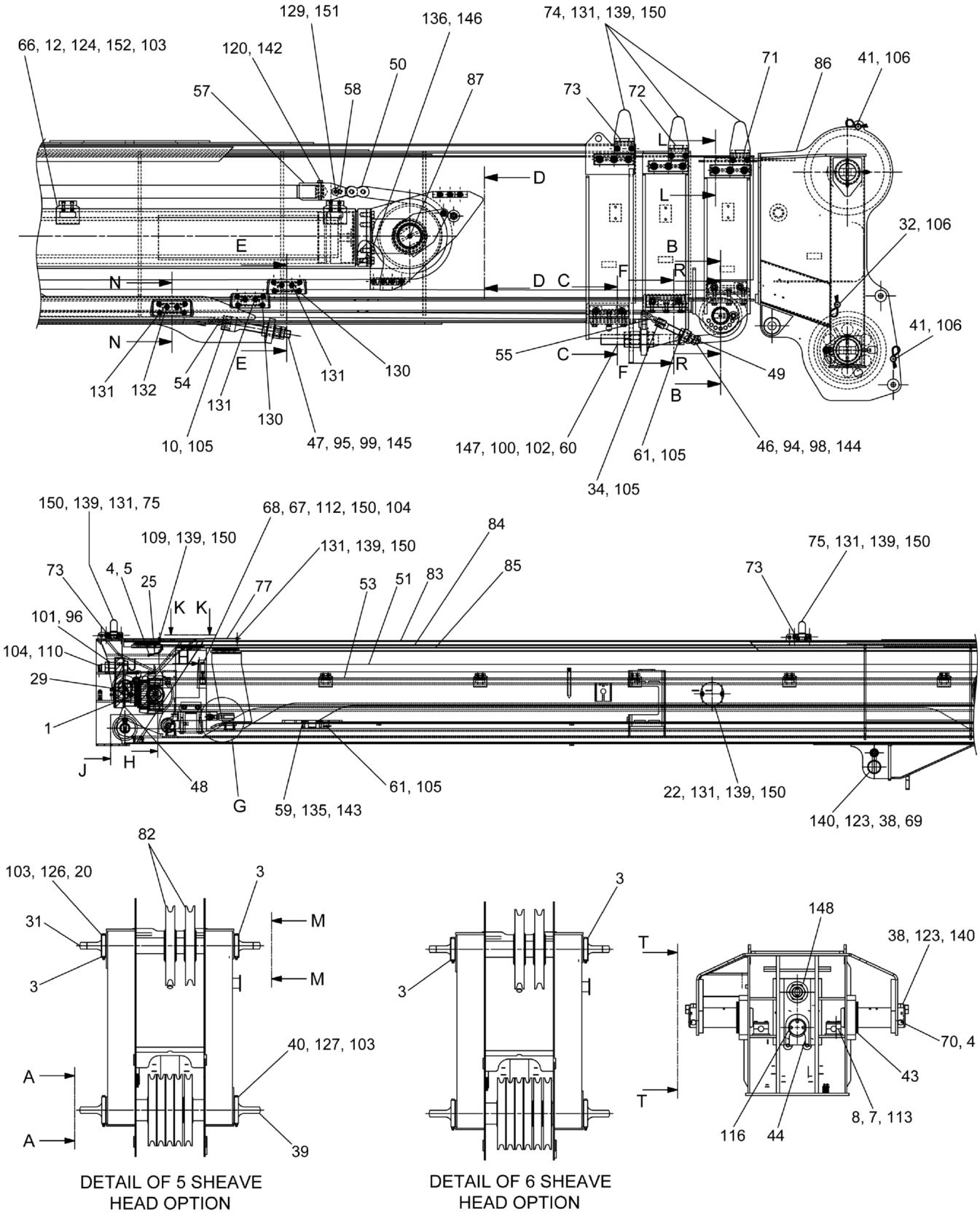

DETAIL OF 5 SHEAVE HEAD OPTION

DETAIL OF 6 SHEAVE HEAD OPTION

WHEN ORDERING PARTS, SPECIFY MODEL NUMBER, SERIAL NUMBER AND DESCRIPTION OF PARTS REQUIRED

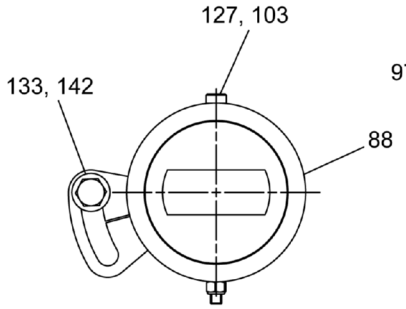

VIEW A - A

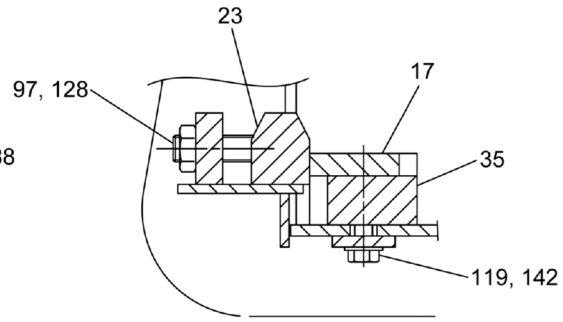

SECTION B - B

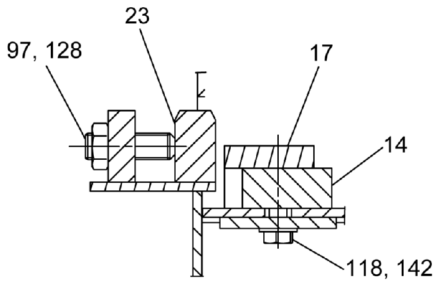

SECTION C - C

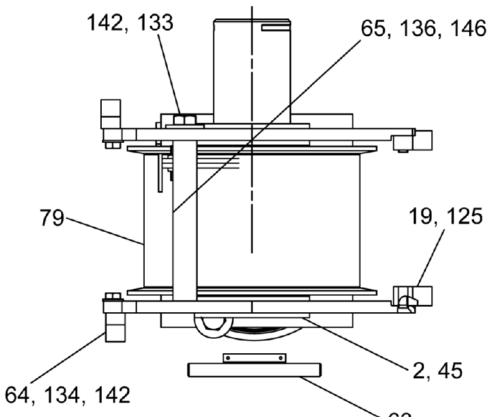

SECTION D - D

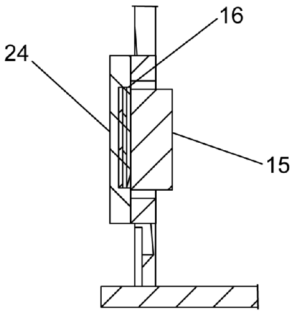

SECTION E - E

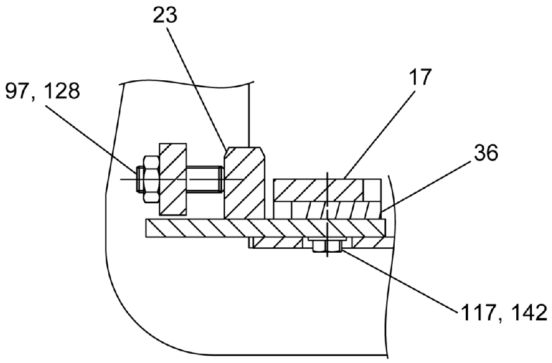

SECTION F - F

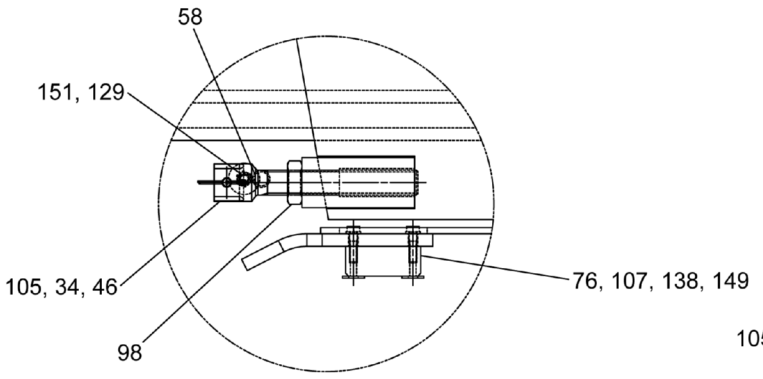

DETAIL G

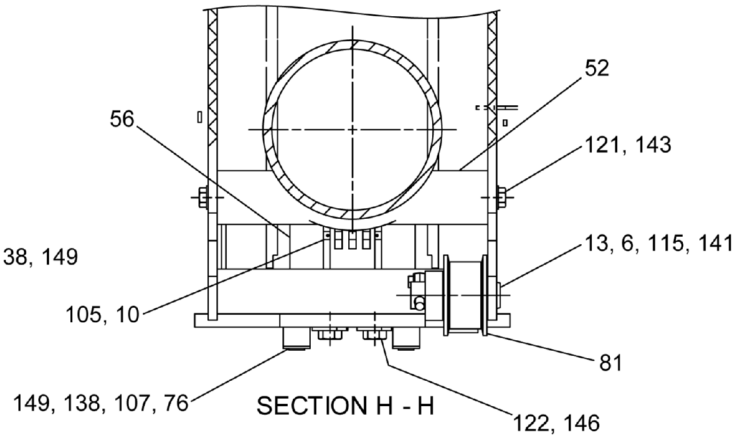

SECTION H - H

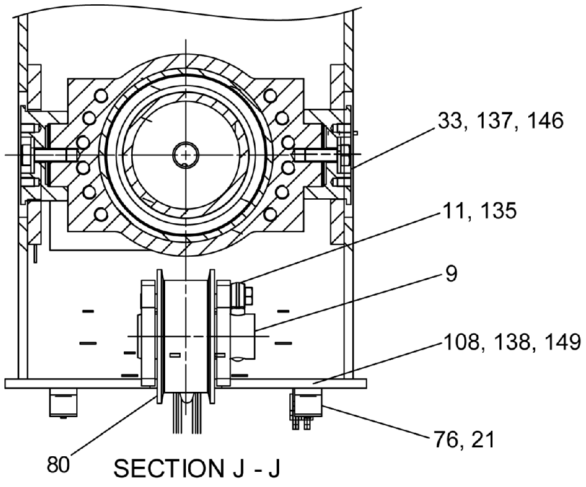

SECTION J - J

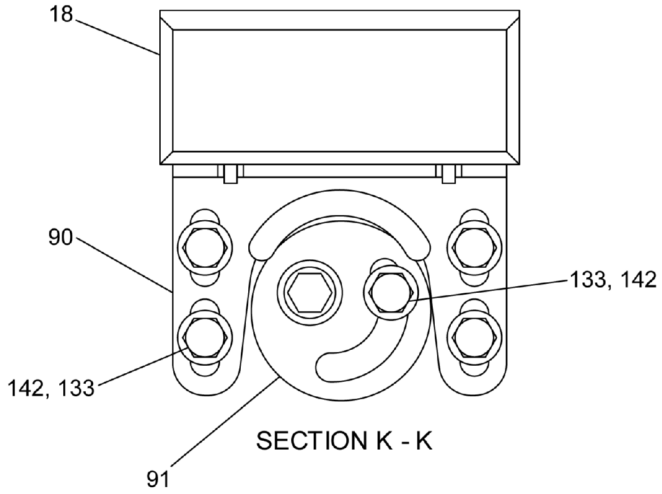

SECTION K - K

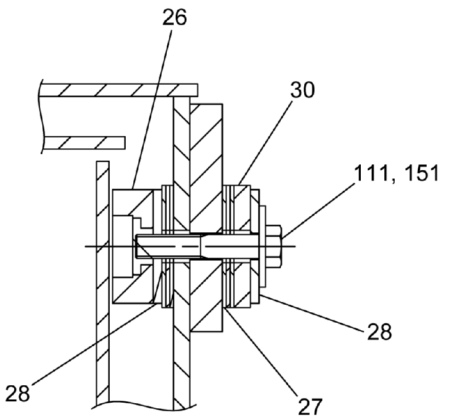

SECTION L - L

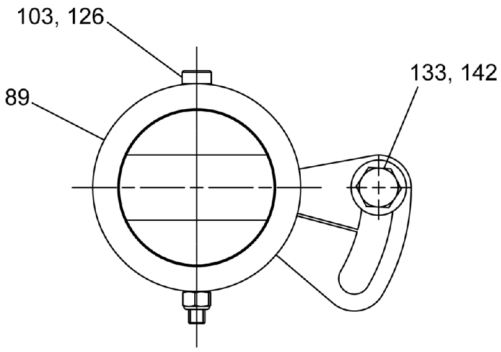

VIEW M - M

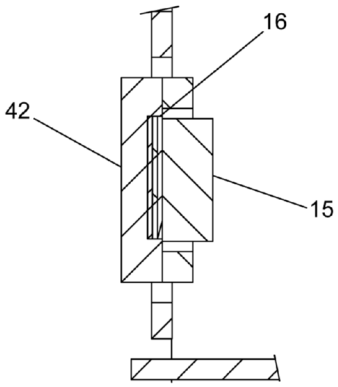

SECTION N - N

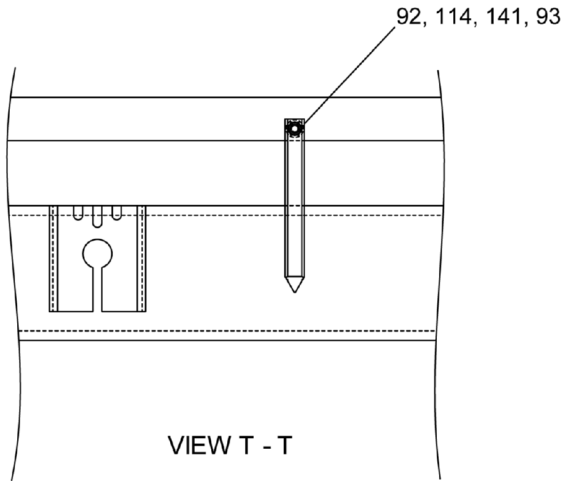

VIEW T - T

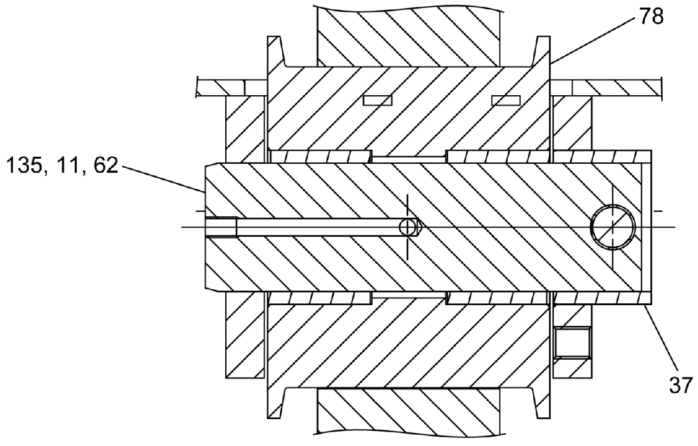

SECTION R - R

WHEN ORDERING PARTS, SPECIFY MODEL NUMBER, SERIAL NUMBER AND DESCRIPTION OF PARTS REQUIRED

REF	PART NO.	DESCRIPTION	QTY
	721A0025 (Rev. M)	*Boom Assembly, 126FT*	
1	12019-366	Adapter, MJIC-12/MORB -12, L	2
2	1208-86	Shim, Round 4.25 X 5.50 X 0.060, ST Z	2
3	1209-99	Spacer 3.050 X 4.375 X 0.030, NYL	4
4	1213-1	1/8NPT Greese Zerk STR.	6
5	1219-40	Elbow, HYD, 90°, 0.25	2
6	1222-348	Rod End 0.50 SH-OD X 3.25	1
7	1240-195	Cover Plate 3.34 X 2.36	2
8	1240-215	Clamp Body, 2 PCS, 1.25 DIA	2
9	709-4009	Pin	1
10	709-4029	Pin	2
11	709-4255	Rod Eye	2
12	709-6672	Wear Pad	16
13	709-7225	Pin	1
14	709-7235	Spacer	2
15	709-7257	Wear Pad	6
16	709-7258	Shim, 16GA 102 1.50 X 3.00	18
17	709-7269	Wear Pad	6
18	709-7279	Wear Pad	6
19	709-7281	Wear Block	2
20	709-7299	Collar, Shaft	1
21	709-7527	Spacer	2
22	709-7633	Cover	2
23	709-7767	Wear Bar	6
24	709-7774	Cover	4
25	711-0238	Tube, -4, MINFLR-4SW/NO End	2
26	712-0086	Wear Pad	6
27	712-0093	Shim	36
28	712-0094	Plate	12
29	712-0211	Shim, Collar, CYL Rod Keeper	7
30	712-0393	Shim 7.00 X 1.88 X 0.25	6
31	714-0228	Pin	1
32	714-0245	Pin, Rope Keeper	1
33	717-0353	Pin, CYL Mount, Eccentric	2
34	717-0402	Pin 0.375 X 2.00	2
35	717-0573	Spacer	2
36	717-0574	Spacer	2
37	717-1255	Bushing, Eccentric	1
38	718-0058	Rod End	3
39	718-0139	Shaft, Head	1
40	718-0196	Collar, Head Shaft	1
41	718-0329	Pin 1.00 X 16.15	2
42	718-0348	Cover 6.50 X 2.50 X 0.50	2
43	718-0576	Shim	20
44	718-0753	Collar Plate, CYL Attach	1
45	720-0167	Plate, Pin Keeper	2
46	720-0310	Link, Chain BL844	2
47	720-0311	Link, Chain BL1066	1
48	720-0327	Shim, Round 3.625 X 7.25 X 0.19	1
49	720-0381	Chain, BL1288 Thick X 409.50	1

REF	PART NO.	DESCRIPTION	QTY
	721A0025 (Rev. M)	*Boom Assembly, 126FT*	
50	720-0382	Chain, BL1688 Thick X 406.00	1
51	721-0019	Rod, Tension	1
52	721-0021	Wear Pad, CYL Cradle	2
53	**721-0023**	Cylinder, Boom Extend (see page 96)	1
54	721-0026	Chain, BL1066 X 391.25	1
55	721-0027	Chain, BL844 X 453.00	1
56	721-0029	Link, Static, Rod-Plate	1
57	721-0030	Link, Adjust 1688	1
58	721-0031	Pin, Chain Anchor	2
59	721-0032	Link, Static 1288	1
60	721-0033	Link, Adjust 1288	1
61	721-0034	Pin, Chain Anchor	2
62	721-0098	Pin, Sheave Pivot	1
63	721-0099	Pin, Sheave Pivot	1
64	721-0103	Wear Block 6.00 X 2.00 X 0.75	2
65	721-0104	Rod, Spacer	1
66	721-0107	Wear Pad	8
67	721-0108	Wear Pad	1
68	721-0109	Strap, Retainer	1
69	721-0161	Pin, Hoist CYL	1
70	721-0162	Pin, Boom Pivot	2
71	721-0217-1	Wear Pad	1
72	721-0217-2	Wear Pad	1
73	721-0217-3	Wear Pad	3
74	721-0218	Bracket, Cable Guide	6
75	721-0219	Bracket, Cable Guide	4
76	721-0240	Wear Pad	6
77	721-0273	Cover, Boom Top	1
78	**721A0088**	Sheave with Bushing (see page 98)	1
79	**721A0090**	Sheave W/Bushing (see page 99)	1
80	**721A0092**	Sheave W/ Bushing (see page 100)	1
81	**721A0094**	Sheave W/Bushing (see page 101)	1
82	**721A0358**	Sheave 3/4" (see page 102)	2
83	721F0002	Boom, Base Section	1
84	721F0003	Boom Second Section	1
85	721F0004	Boom Third Section	1
86	721F0005	Boom, Tip Section W/ Head	1
87	721F0100	Bracket, Chain Sheave	1
88	721F0224	Collar, Locking	1
89	721F0225	Collar, Locking	1
90	721F0295	Bracket, Wear Pad	6
91	721F0299	Eccentric Weldment	6
92	729-02578	Pointer	1
93	N04-438C000-25	Nut, HEX 0.4375-14, ST SQC G5	1
94	N04-A00C000-Y8	Nut, HEX 1.00-8, ST SQC G8	1
95	N04-A25C000-Y8	Nut, HEX 1.25-7, ST SQC G8	1
96	N04-B25F000-Y8	Nut, HEX 2.25-12, ST SQC G8	1
97	N05-750C000-25	Nut, HEX JAM 0.75-10, ST SQC G5	12
98	N05-A00C000-25	1-8NC Jam Nut	3

REF	PART NO.	DESCRIPTION	QTY
	721A0025 (Rev. M)	*Boom Assembly, 126FT*	
99	N05-A25C000-25	Nut, HEX JAM 1.25-7, ST SQC G5	2
100	N05-A75C000-2A	Nut, HEX JAM 1.75-5, ST SQC GA	2
101	N05-B25F000-2A	Nut, HEX JAM 2.25-12, ST SQC GA	2
102	N12-A75C000-Y8	Nut, HEX HVY 1.75-5, ST SQC G8	1
103	NYL-312C000-25	Nut, HEX NYL-INS 0.312-18, ST SQC G5	36
104	NYL-375C000-25	Nut, HEX NYL-INS 0.375-16, ST SQC G5	3
105	P02-125XA50-20	Pin, Cotter 0.125 X 1.50, ST SQC	12
106	PHP-178XC75-20	PIN, CTRHAIR 0.178 X 3.75 X 1.03, ST SQC	6
107	S01-312CA25-25	SCR, HHCS 0.3125-18 X 1.25, ST Z G5	8
108	S01-312CA75-25	SCR, HHCS 0.3125-18 X 1.75, ST SQC G5	4
109	S01-375CA50-25	SCR, HHCS 0.375-16 X 1.50, ST Z GR5	1
110	S01-375CA75-25	SCR, HHCS 0.375-16 X 1.75, ST SQC G5	1
111	S01-375CB00-25	SCR, HHCS 0.375-16 X 2.00, ST Z GR5	18
112	S01-375CB25-25	SCR, HHCS 0.375-16 X 2.25, ST Z GR5	2
113	S01-375CB75-25	SCR, HHCS 0.375-16 X 2.75, ST Z GR5	4
114	S01-438CA25-25	SCR, HHCS 0.4375-14 X 1.25, ST Z G5	1
115	S01-438CA25-Y8	SCR, HHCS 0.4375-14 X 1.25, ST SQC G8	1
116	S01-438CA50-25	SCR, HHCS 0.4375-14 X 1.50, ST SQC G5	3
117	S01-500CA50-25	SCR, HHCS 0.50-13 X 1.50, ST Z GR5	6
118	S01-500CB25-25	SCR, HHCS 0.50-13 X 2.25, ST SQC G5	6
119	S01-500CB50-25	SCR, HHCS 0.50-13 X 2.50, ST SQC G5	6
120	S01-500CC00-Y8	SCR, HHCS 0.50-13 X 3.00, ST SQC G8	1
121	S01-625CD50-25	SCR, HHCS 0.625-11 X 4.50, ST SQC G5	4
122	S01-750CD50-Y8	SCR, HHCS 0.75-10 X 4.50, ST SQC G8	4
123	S01-A25CC00-Y8	SCR, HHCS 1.25-7 X 3.00, ST SQC G8	3
124	S14-312CA50-H2	SCR, SHCS 0.3125-18 X 1.50, ST SQC	32
125	S16-500CA00-20	SCR, FHSHCS 0.50-13 X 1.00, ST SQC	8
126	S20-375CD00-HP	SCR, SHSS 0.375 X 4.00, STL	2
127	S20-375CE00-HP	SCR, SHSS 0.375 X 5.00, STL	2
128	S32-750CB50-20	SCR, SSS CPT 0.75-10 X 2.50, ST SQC	12
129	SHF-375C500-25	SCR, HHCS FT 0.375-16 X 0.50, ST SQC G5	4
130	SHF-375C625-25	SCR, HHCS FT 0.375-16 X 0.625, ST SQC G5	16
131	SHF-375C750-25	SCR, HHCS FT 0.375-16 X 0.75, STZ G5	41
132	SHF-375CA00-25	HHCS 3/8 NC X 1 GR5 Zinc	4
133	SHF-500CA00-Y8	SCR, HHCS FT 0.50-13 X 1.00, ST SQC G8	34
134	SHF-500CA25-25	SCR, HHCS FT 0.50-13 X 1.25, ST Z G5	6
135	SHF-625CA50-Y8	SCR, HHCS FT 0.625-11 X 1.50, ST SQC G8	6
136	SHF-750CA50-Y8	SCR, HHCS FT 0.75-10 X 1.50, ST SQC G8	10
137	SHF-750CB00-Y8	SCR, HHCS FT 0.75-10 X 2.00, ST SQC G8	2
138	W07-312X000-20	WSH, LCK, MED SPLT 0.3125, ST SQC	12
139	W07-375X000-20	Washer Lock 3/8 MED	26
140	W07-A25X000-20	WSH, LCK, MED SPLT 1.25, ST SQC	3
141	WAH-43NX000-20	WSH, FL HRD A-NRW 0.4375, ST SQC	2
142	WAH-50NX000-20	WSH, FL HRD A-NRW 0.50, ST SQC	59
143	WAH-62NX000-20	WSH, FL HRD A-NRW 0.625, ST SQC	8
144	WAH-A0NX000-20	WSH, FL HRD A-NRW 1.00, ST SQC	2
145	WAH-A2NX000-20	WSH, FL HRD A-NRW 1.25, ST SQC	2
146	WAJ-750X000-20	WSH, FL HRD A-REG 0.75, ST SQC	18
147	WAR-A75X000-22	WSH, FL TYPA-REG 1.75, ST SQC G2	2

REF	PART NO.	DESCRIPTION	QTY
	721A0025 (Rev. M)	*Boom Assembly, 126FT*	
148	WAR-B25X000-22	WSH, FL TYPA-REG 2.25, ST SQC G2	2
149	WAW-31WX000-20	WSH, FL TYPA-WID 0.3125, ST SQC	12
150	WAW-37WX000-20	WSH, FL TYPA-WID 0.375, ST Z	28
151	WBW-37WXA25-20	WSH, FL TYPB-WID 0.375, ST SQC	22
152	WMF-80MX000-20	WSH, Flat M8 DIN125, ST Z	64

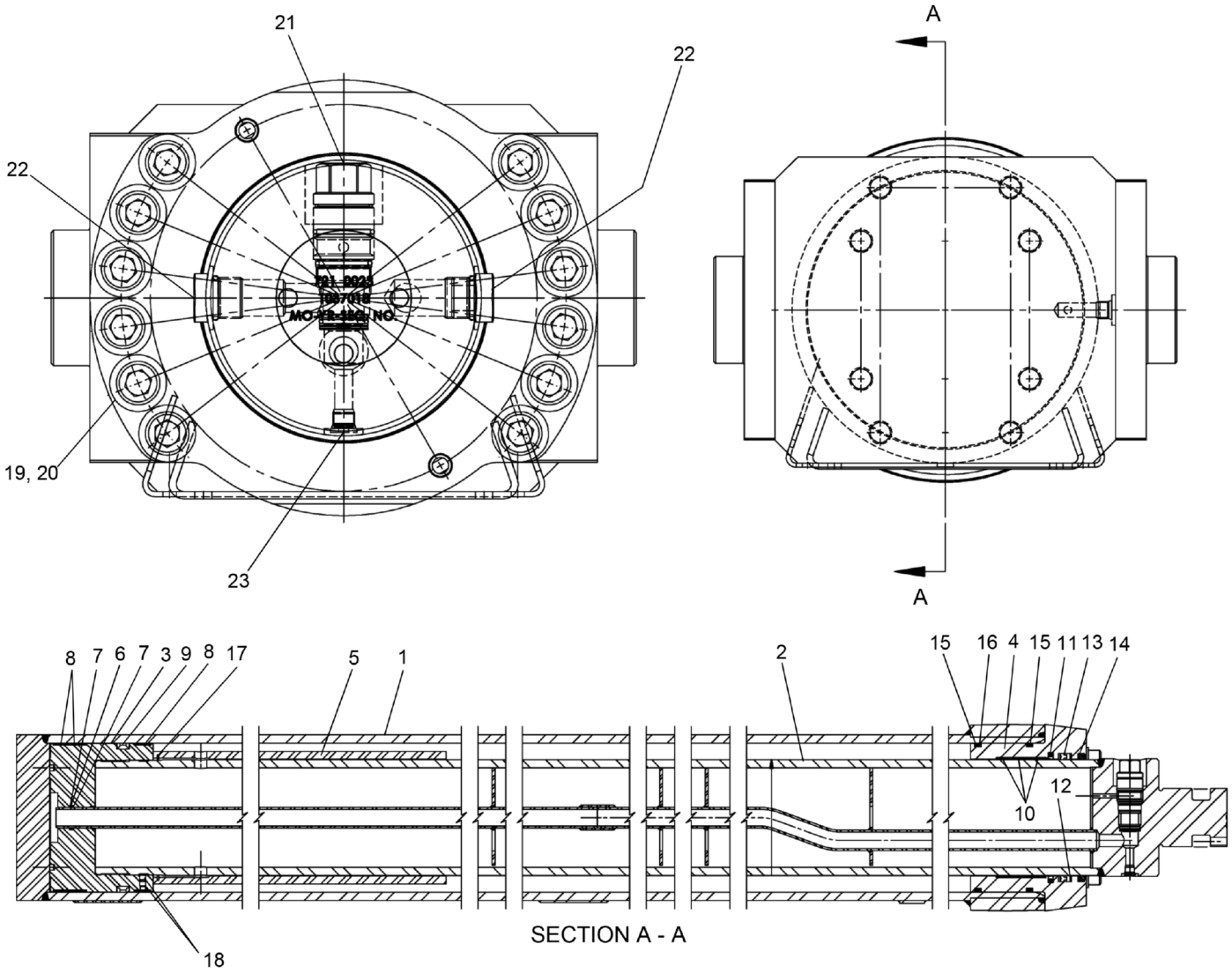

WHEN ORDERING PARTS, SPECIFY MODEL NUMBER, SERIAL NUMBER AND DESCRIPTION OF PARTS REQUIRED

REF	PART NO.	DESCRIPTION	QTY
	721-0023 (Rev. B)	*Cylinder, Boom Extend*	
	222016	Seal Kit 9.000 7.000	1
1	222012	Case Weld S 9.000 384.500	1
2	222013	Rod Weld Tube S 7.000 390.750	1
3	221767	Piston S 9.000 7.000 6.250 STL	1
4	216247	Head S 9.000 7.000 7.000 Cast	1
5	221771	Spacer S 7.040 7.750 27.750	1
6	216738	ORing 218 1.500OD 70N .125CS	1
7	216737	Backup 218 1.500OD .125CS 1758	2
8	222014	Wring 9.000 8.750 1.000 BC (OD Spiral Groove)	3
9	221768	Seal Piston 9.000 Cap GT	1
10	222015	Wring 7.250 7.000 1.000 BC (ID Spiral Groove)	3
11	221777	Seal Rod 7.000R DP R407000	1
12	221779	UCup Backup	1
13	221778	UCup 7.000R .375CS .625 Z Seal	1
14	221781	Wiper 7.000 .375 .375D	1
15	221774	O-Ring 446 9.000OD 70N .250CS	2
16	221775	Backup 446 9.000 1758	1
17	221770	Snap ring INT 7.375 .086T	1
18	221769	SHSS .375-16 .375LW/Nylok	4
19	221783	Washer Hardened Steel .750	12
20	221782	SHCS .750-10 4.500L	12
21	218866	Valve CBALA406-11C-A07	1
22	216233	Plug SAE 12 1.063-12HH STL	2
23	216550	Plug SAE 6.563-18 SH STL	2

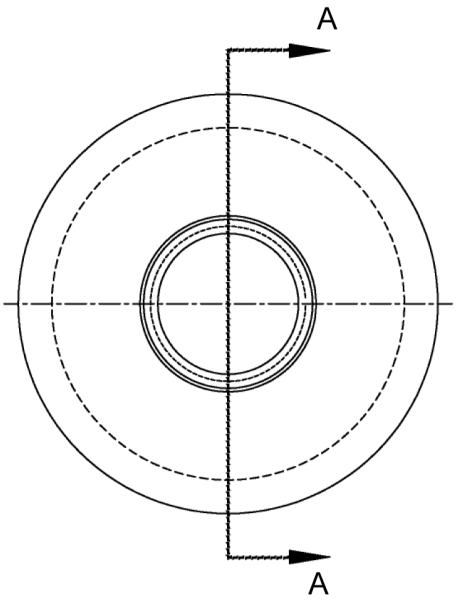

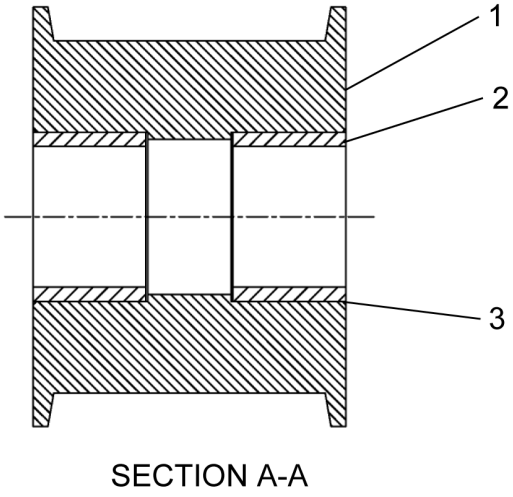

SECTION A-A

REF	PART NO.	DESCRIPTION	QTY
	721A0088 (Rev. A)	*Sheave with Bushing*	
1	721-0087	Sheave, Bushing	1
2	721-0285	Bushing 2.50X3.00X2.00	2
3	511-3024	Loctite RC-609	AR

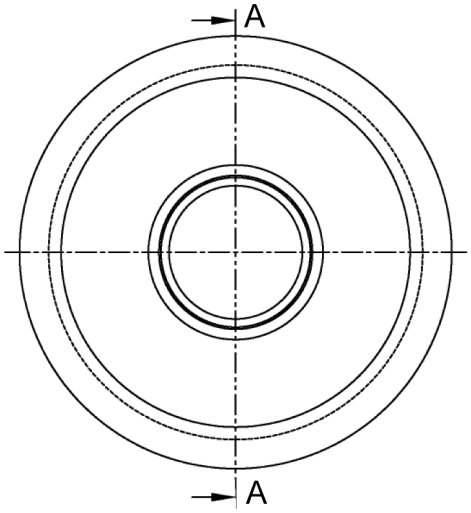

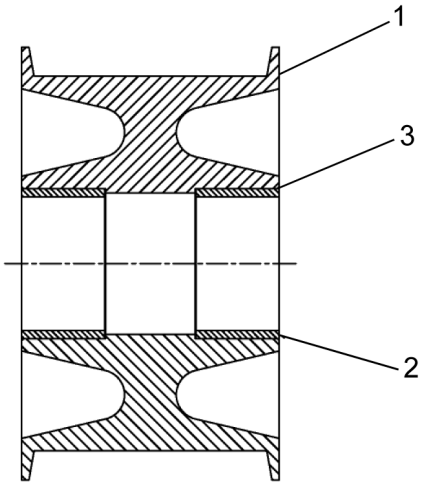

SECTION A-A

REF	PART NO.	DESCRIPTION	QTY
	721A0090 (Rev. A)	*Sheave W/Bushing*	
1	721-0089	Sheave, Chain	1
2	721-0284	Bushing 4.00X4.50X2.50	2
3	511-3024	Loctite RC-609	AR

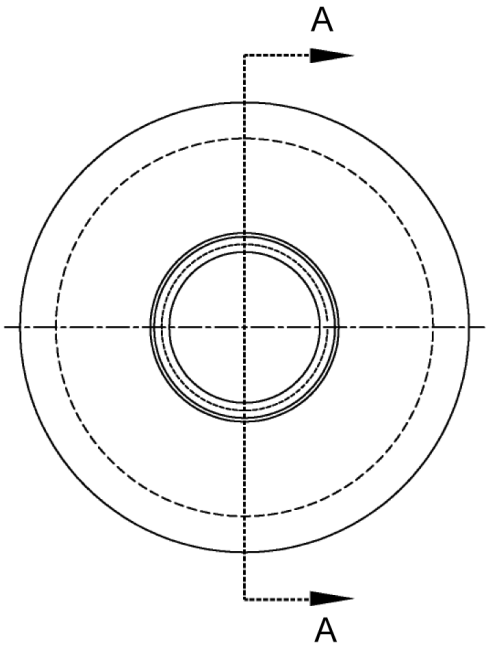

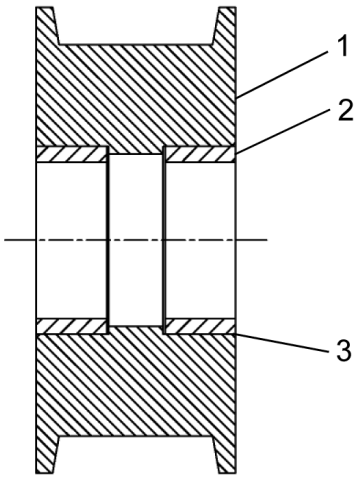

SECTION A-A

REF	PART NO.	DESCRIPTION	QTY
	721A0092 (Rev. A)	*Sheave W/ Bushing*	
1	721-0091	Sheave, Bushing	1
2	721-0286	Bushing 2.50X3.00X1.125	2
3	511-3024	Loctite RC-609	AR

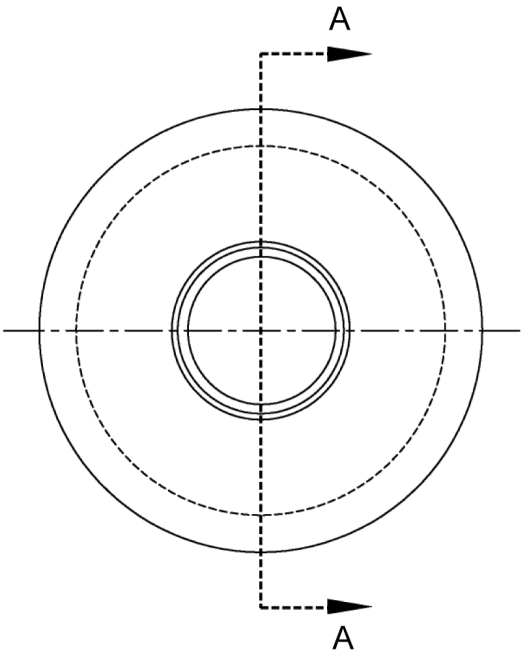

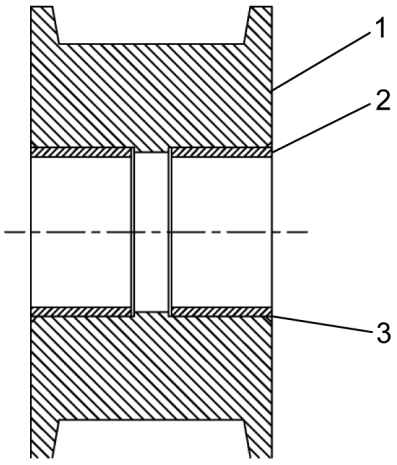

SECTION A-A

REF	PART NO.	DESCRIPTION	QTY
	721A0094 (Rev. A)	*Sheave W/Bushing*	
1	721-0093	Sheave, Bushing	1
2	721-0287	Bushing 1.50X1.69X1.00	2
3	511-3024	Loctite RC-609	AR

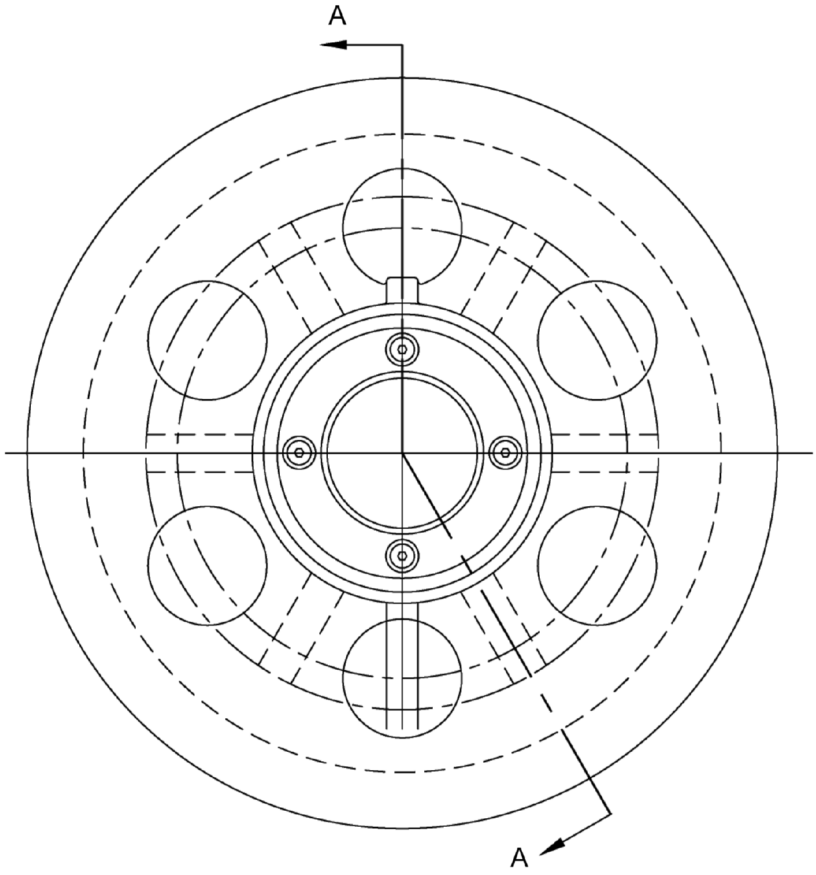

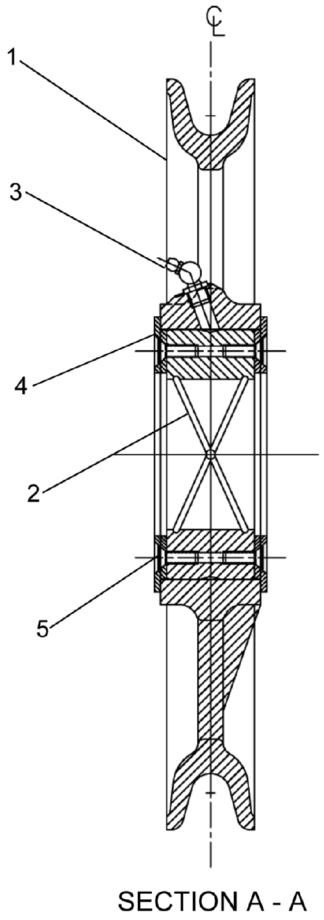

SECTION A - A

REF	PART NO.	DESCRIPTION	QTY
	721A0358 (Rev. A)	*Sheave 3/4"*	
1	718-0940	Sheave, Cast Iron	1
2	721-0282	Bushing, Sheave	1
3	1213-3	Fitting, Grease 1/8 45°	1
4	721-0283	Washer, Bushing Flange	2
5	1203-228	Capscrew, Flat SH .25UNCX.75	8

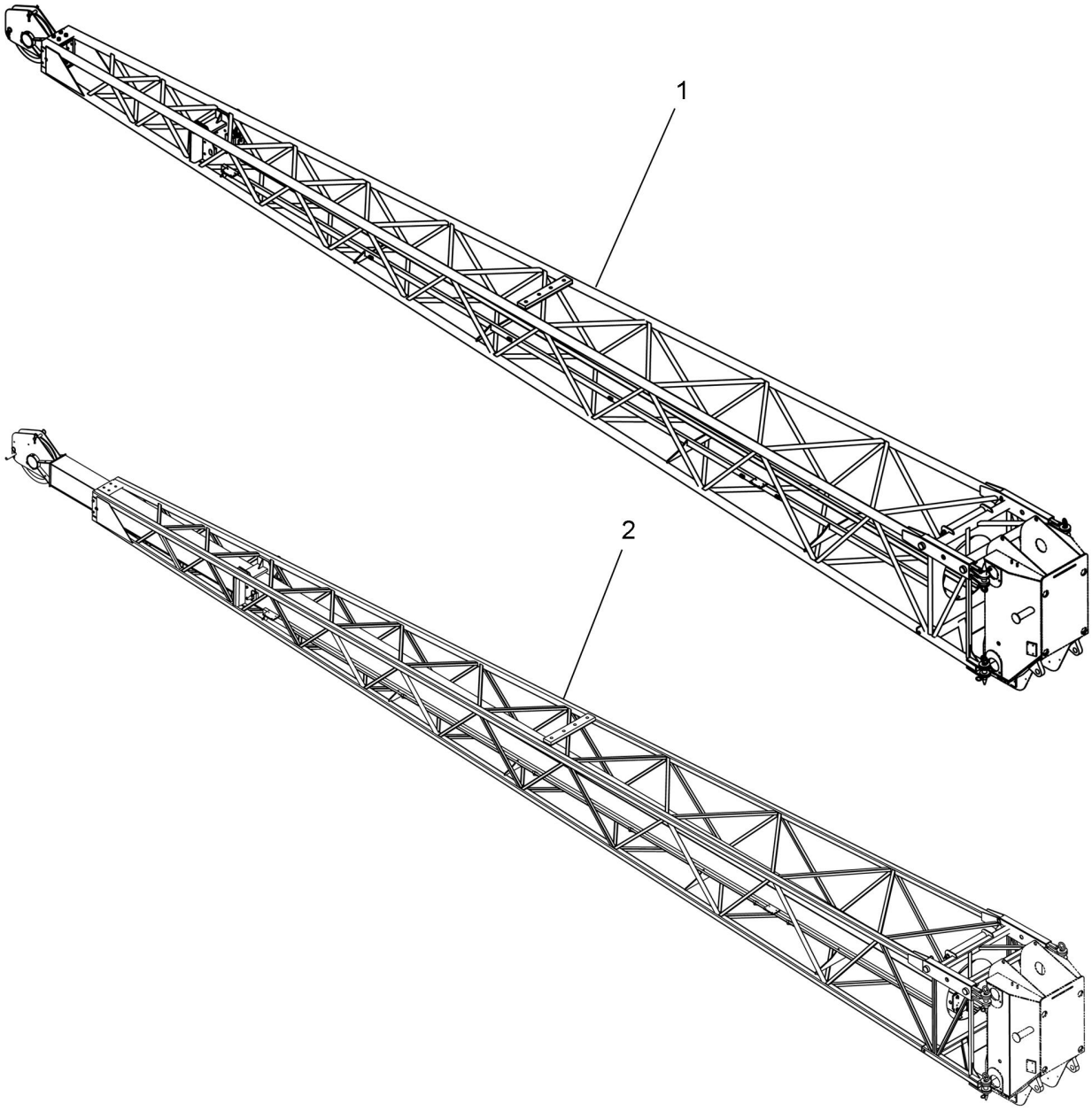
1
2

REF	PART NO.	DESCRIPTION	QTY
	480-126-2017-JIB ASSY* (Rev. 00)	*Jib Assembly Options*	
1	**720A0342**	Offsettable Jib Assembly, 33'-57' (see page 105)	1
2	**720A0343**	Offsettable Jib Assembly - 32' (see page 114)	1

* NOT PURCHASABLE AT THIS LEVEL

WHEN ORDERING PARTS, SPECIFY MODEL NUMBER, SERIAL NUMBER AND DESCRIPTION OF PARTS REQUIRED

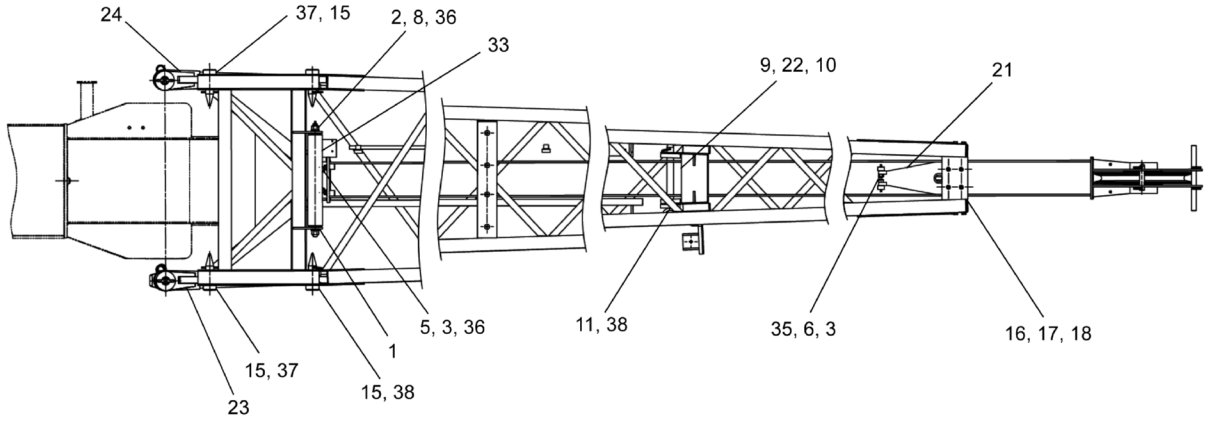

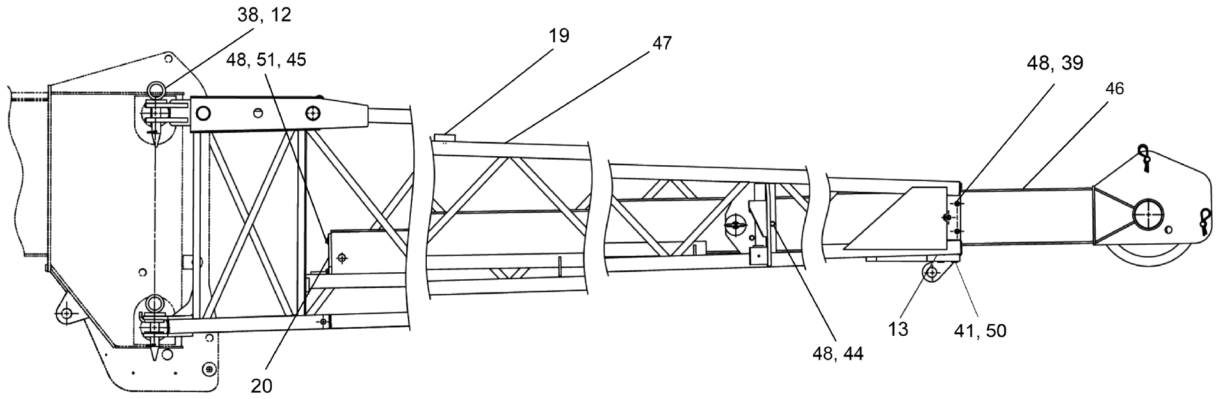

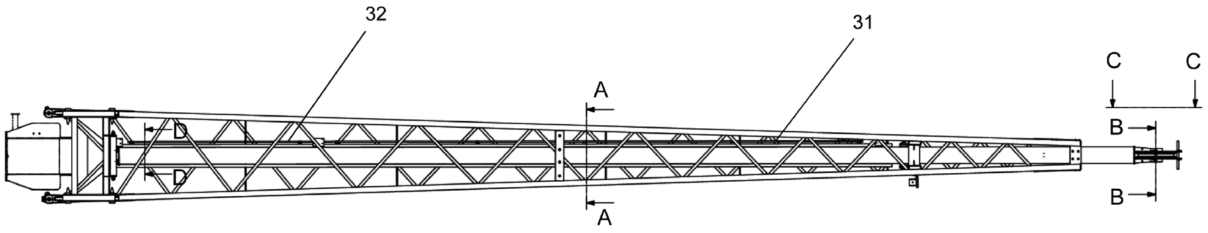

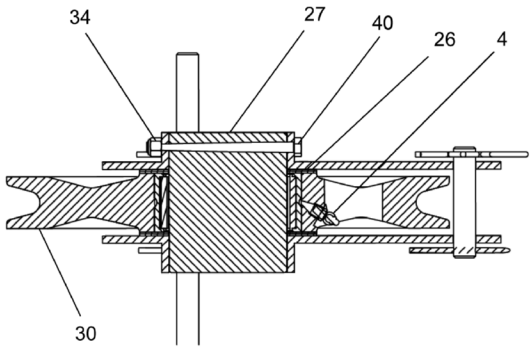

SECTION B - B

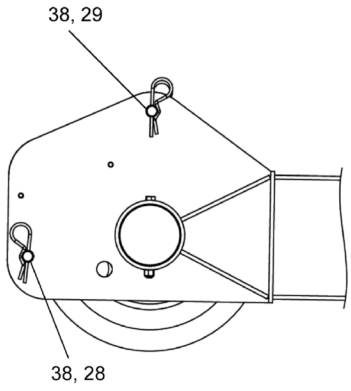

SECTION C - C

WHEN ORDERING PARTS, SPECIFY MODEL NUMBER, SERIAL NUMBER AND DESCRIPTION OF PARTS REQUIRED

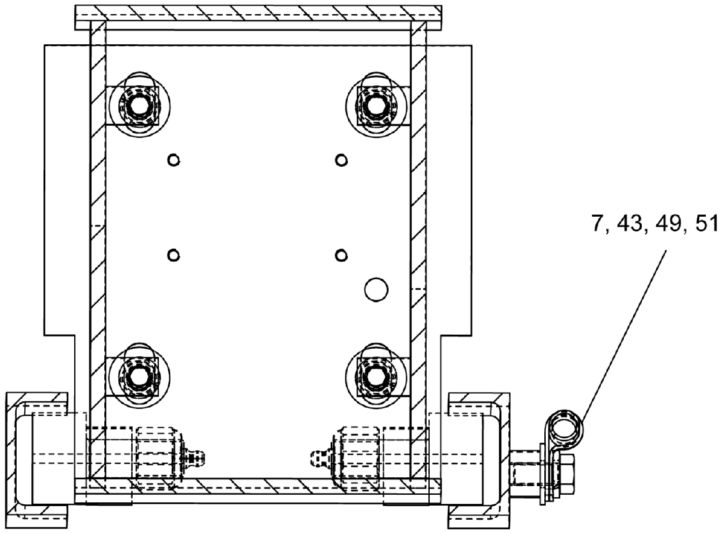

SECTION D - D

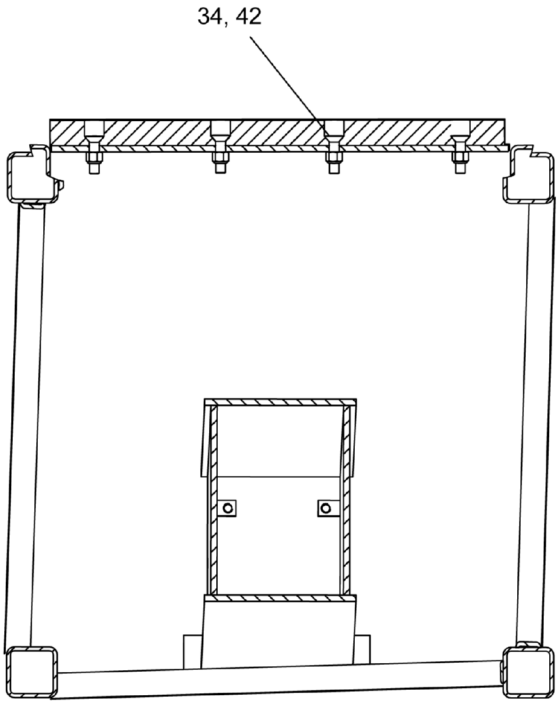

SECTION A - A

REF	PART NO.	DESCRIPTION	QTY
	720A0342 (Rev. K)	*Offsettable Jib Assembly, 33'-57'*	
1	1208-03	Shim, Round 0.625 X 1.25 X 0.075, ST Z	6
2	1213-10	Grease FTG, Zerk 0.25-28 STR-SHT	1
3	1213-11	Fitting, Grease STR	4
4	1213-3	Fitting, Grease 1/8 45°	1
5	1217-349	Roller, Cam DIA 1.5 X .88 THK	2
6	1217-49	Cam Follower	2
7	200B2007-4	Clamp, MED, 1/2 ID	7
8	38404	Shaft	1
9	707-8525	Plate	2
10	707-8788	Shim	2
11	707F8527	Pin	1
12	707F8530	Pin	4
13	708-0260	Shim	4
14*	**708A0282**	Anti-Two Block ASSY-Jibs (see page 109)	1
15	709-7290	Pin	4
16	709-7296	Plate	2
17	709-7297	Shim	2
18	709-7298	Shim	6
19	709-7304	Wear Pad 18.00 X 3.00 X 1.00	1
20	709F6690	Bracket	1
21	709F7154	Bracket	1
22	710-0052	Shim	2
23	714F0335	Link	1
24	714F0336	Link	1
25*	**717A0691**	Jib Stowage ASSY (see page 111)	1
26	718-0197	Spacer	4
27	718-0239	Shaft	1
28	718-0242	Pin	1
29	718-0243	Pin	1
30	**718A1013**	Sheave ASSY 3/4 Wire Rope (see page 113)	1
31	720-0541	Tube, 197"	1
32	720-0542	Tube, 68"	1
33	A35401-2	Roller	1
34	NYL-375C000-25	Nut, HEX NYL-INS 0.375-16, ST SQC G5	5
35	NYL-438F000-25	Nut, Lock, .44F	2
36	NYL-625F000-25	Nut, HEX NYL-INS 0.625-18, ST Z G5	4
37	P22-219XB00-GP	Pin, Spring SLTD 0.2188 X 2.00, ST	2
38	PHP-178XC75-20	PIN, CTRHAIR 0.178 X 3.75 X 1.03, ST SQC	11
39	S01-375CB00-25	SCR, HHCS 0.375-16 X 2.00, ST Z GR5	6
40	S01-375CE00-25	SCR, HHCS 0.375-16 X 5.00, ST SQC G5	1
41	S14-625CA00-H2	SCR, SHCS 0.625-11 X 1.00, ST SQC	4
42	S16-375CA25-20	SCR, FHSHCS 0.375-16 X 1.25, ST SQC	4
43	SHF-375C750-25	SCR, HHCS FT 0.375-16 X 0.75, STZ G5	7
44	SHF-375CA00-25	HHCS 3/8 NC X 1 GR5 Zinc	6
45	SHF-375CA25-25	SCR, HHCS FT 0.375-16 X 1.25, ST SQC G5	4
46	T118522	Stringer-25 FT	1
47	T123609	Jib	1
48	W07-375X000-20	Washer Lock 3/8 MED	16
49	W07-438X000-20	WSH, LCK MED SPLT 0.4375, ST Z	7

* ITEM NOT SHOWN IN ILLUSTRATION

WHEN ORDERING PARTS, SPECIFY MODEL NUMBER, SERIAL NUMBER AND DESCRIPTION OF PARTS REQUIRED

REF	PART NO.	DESCRIPTION	QTY
	720A0342 (Rev. K)	*Offsettable Jib Assembly, 33'-57'*	
50	W07-625X000-20	WSH, LCK, MED SPLT 0.625, ST Z	4
51	WAW-37WX000-20	WSH, FL TYPA-WID 0.375, ST Z	11

* ITEM NOT SHOWN IN ILLUSTRATION

WHEN ORDERING PARTS, SPECIFY MODEL NUMBER, SERIAL NUMBER AND DESCRIPTION OF PARTS REQUIRED

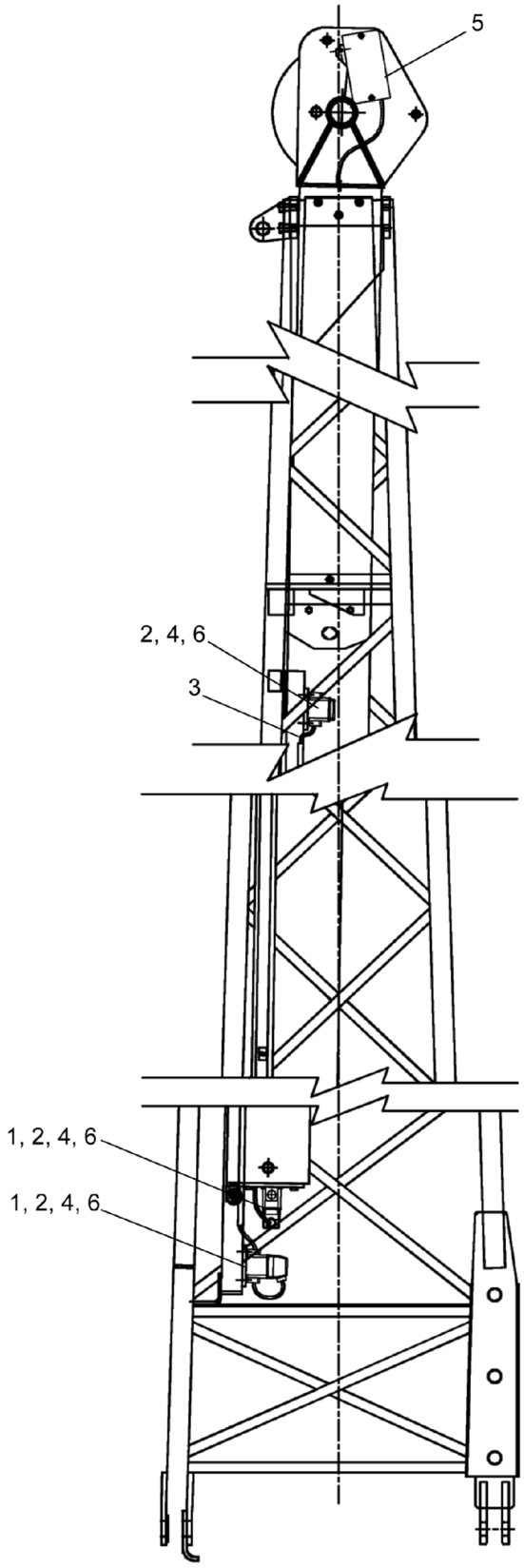

WHEN ORDERING PARTS, SPECIFY MODEL NUMBER, SERIAL NUMBER AND DESCRIPTION OF PARTS REQUIRED

REF	PART NO.	DESCRIPTION	QTY
	708A0282 (Rev. P)	*Anti-Two Block ASSY-Jibs*	
1	T127379	Hood, Weidmuller	2
2	T127374	Base, Weidmuller	3
3	T116674	Cable, 2 Conductor	624
4	W07-190X000-20	WSH, LCK, MED SPLT 10, ST SQC	12
5	709-7821	Switch	1
6	SL5-190F500-20	SCR, CR RND MS 10-32 X 0.50, ST SQC	12

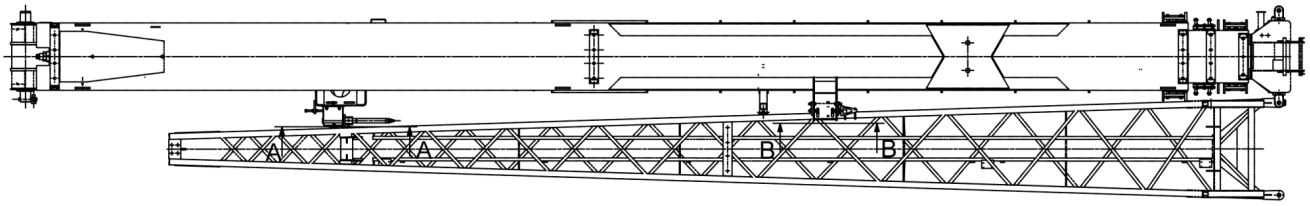

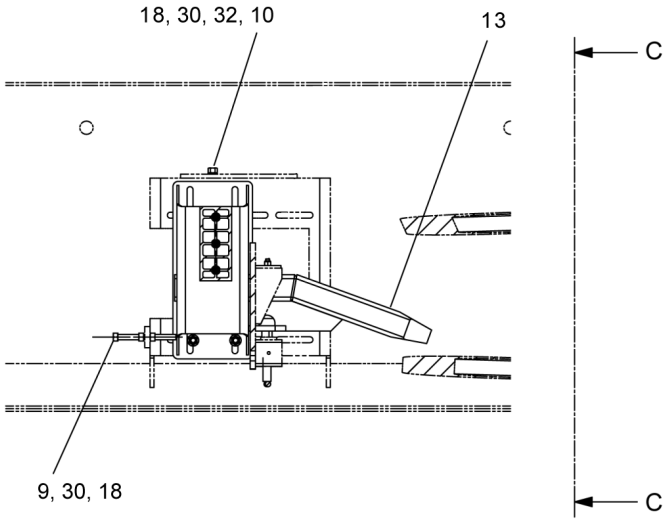

SECTION A - A

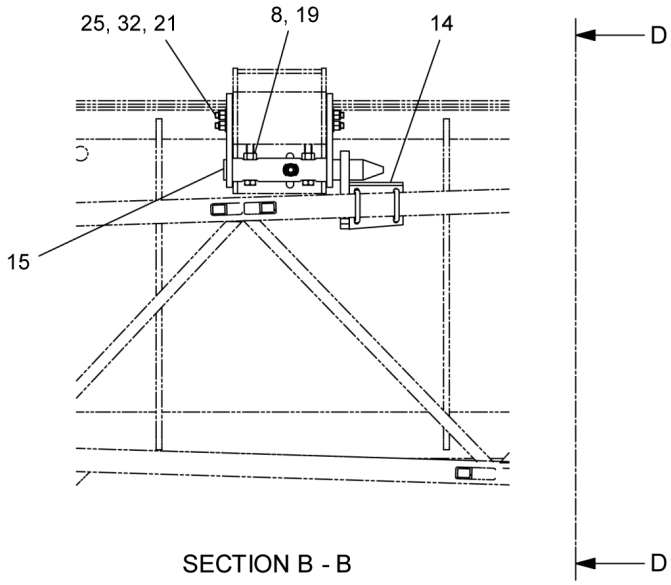

SECTION B - B

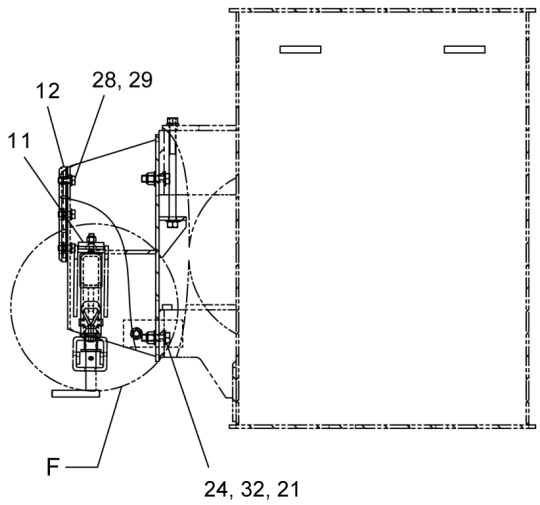

VIEW C - C

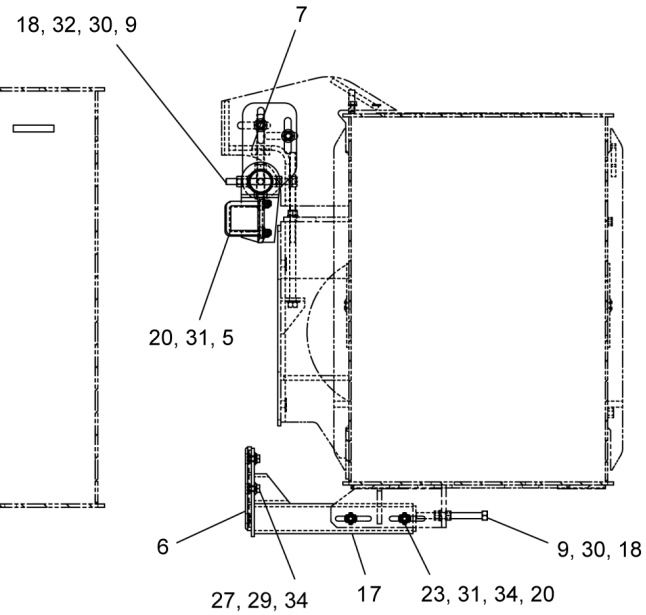

VIEW D - D

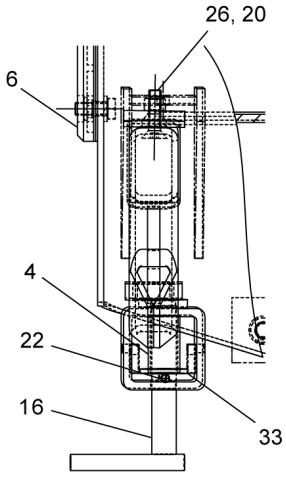

DETAIL F

WHEN ORDERING PARTS, SPECIFY MODEL NUMBER, SERIAL NUMBER AND DESCRIPTION OF PARTS REQUIRED

REF	PART NO.	DESCRIPTION	QTY
	717A0691 (Rev. H)	*Jib Stowage ASSY*	
1*	12178-1	Rope	1
2*	1222-202	Plastic Tie	2
3*	1222-364	Safety Snap Jib Stowage GRP	1
4	371-0101	Spring	1
5	708-2742	Rod	2
6	709-1564	Pad	2
7	709-7342	Bar, Threaded, 0.625-11	1
8	709-7358	Capscrew, 0.625-11 X 6.5, 5.5 Inches Of Thread	2
9	709-7359	Capscrew	3
10	709-7360	Capscrew, 0.50-13 X 12.5, 7.50 Inches Of Thread	1
11	709-7384	Wear Pad 2.50 X 1.875 X 0.50	1
12	709-7386	Plate	4
13	709F7316	Bracket, Jib	1
14	709F7327	Bracket	1
15	709F7377	Bracket	1
16	712F0215	Handle	1
17	717F0688	Bracket	1
18	N04-500C000-25	Nut, HEX 0.50-13, ST Z GR5	9
19	N04-625C000-25	Nut, HEX 0.625-11, ST SQC G5	2
20	NYL-375C000-25	Nut, HEX NYL-INS 0.375-16, ST SQC G5	7
21	NYL-500C000-25	Nut, Lock, .50C	8
22	P22-250XA75-G2	Pin, Spring SLTD 0.25 X 1.75, ST SQC	1
23	S01-375CD00-25	SCR, HHCS 0.375-16 X 4.00, ST SQC G5	2
24	S01-500CA75-25	SCR, HHCS 0.50-13 X 1.75, ST Z GR5	4
25	S01-500CB00-25	SCR, HHCS 0.50-13 X 2.00, ST SQC G5	4
26	S16-375CA25-20	SCR, FHSHCS 0.375-16 X 1.25, ST SQC	1
27	SMF-10CM020-28	SCR, HHCS M10-1.5 X 20 FT, ST Z 8.8	2
28	SMF-10CM025-28	SCR, HHCS M10-1.5 X 25 FT, ST Z 8.8	3
29	W07-438X000-20	WSH, LCK MED SPLT 0.4375, ST Z	5
30	W07-500X000-20	WSH, LCK, MED SPLT 0.50, ST SQC	5
31	WAH-37NX000-20	WSH, FL HRD A-NRW 0.375, ST SQC	8
32	WAH-50NX000-20	WSH, FL HRD A-NRW 0.50, ST SQC	19
33	WAN-75NX000-20	WSH, FL TYPA-NRW 0.75, ST Z	2
34	WAW-37WX000-20	WSH, FL TYPA-WID 0.375, ST Z	6

* ITEM NOT SHOWN IN ILLUSTRATION

WHEN ORDERING PARTS, SPECIFY MODEL NUMBER, SERIAL NUMBER AND DESCRIPTION OF PARTS REQUIRED

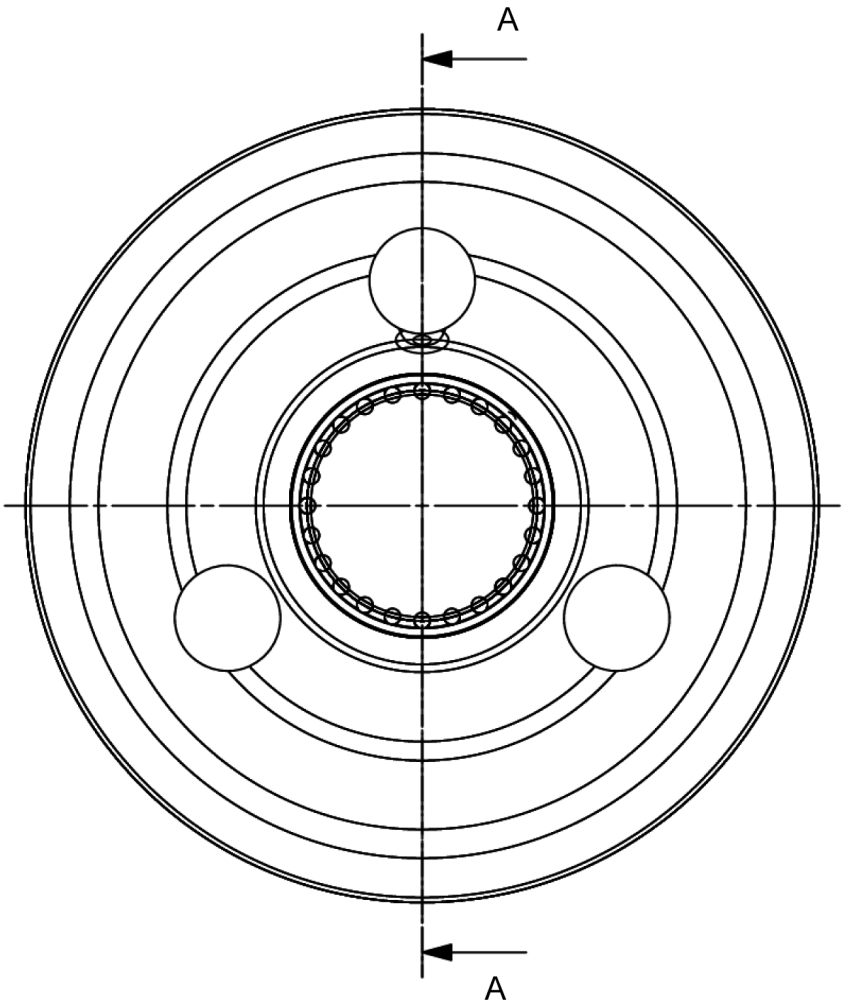

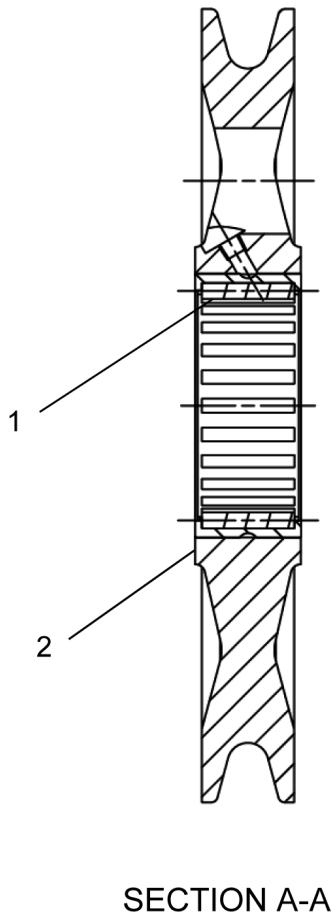

SECTION A-A

REF	PART NO.	DESCRIPTION	QTY
	718A1013 (Rev. C)	*Sheave ASSY 3/4 Wire Rope*	
1	1217-360	Bearing ASSY, Outer, 4.00 Shaft	1
2	718-0225	Sheave, 0.75 DIA Rope	1

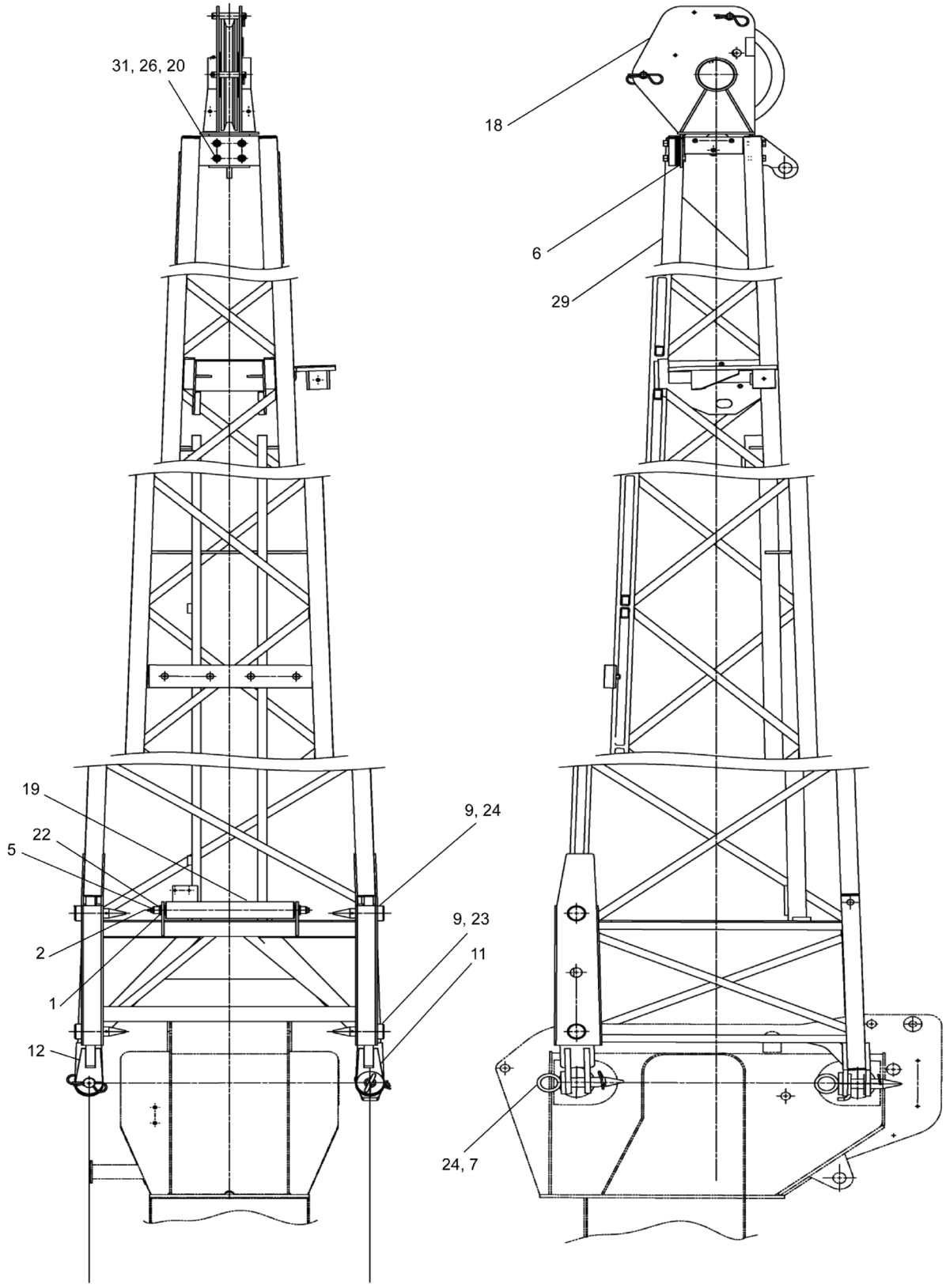

WHEN ORDERING PARTS, SPECIFY MODEL NUMBER, SERIAL NUMBER AND DESCRIPTION OF PARTS REQUIRED

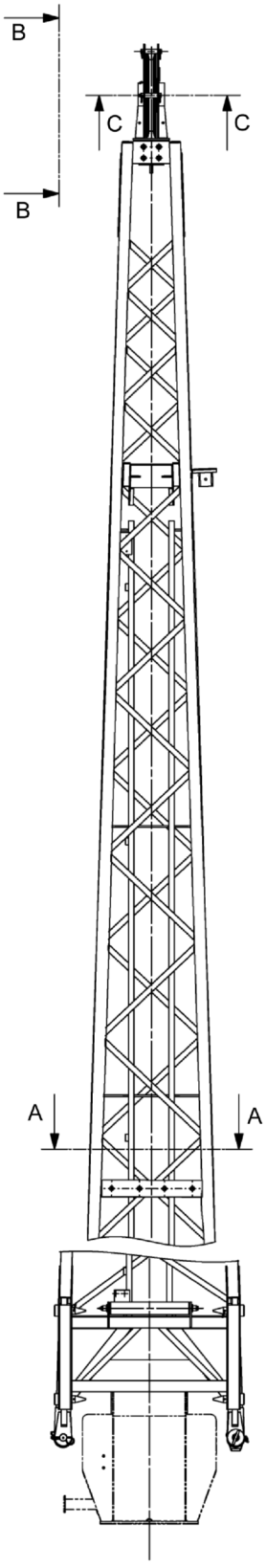

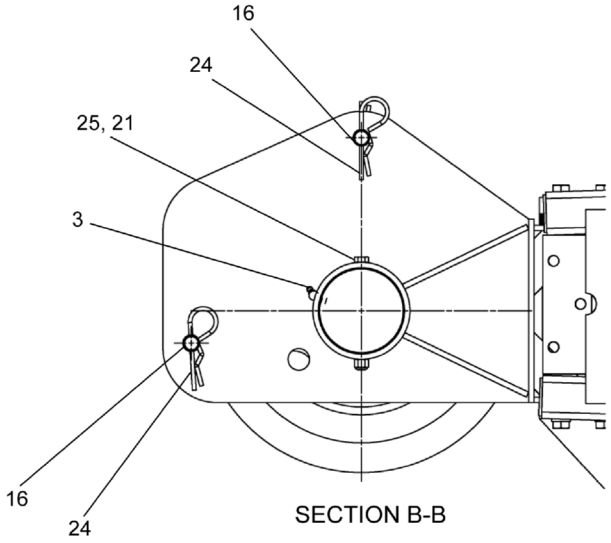

SECTION B-B

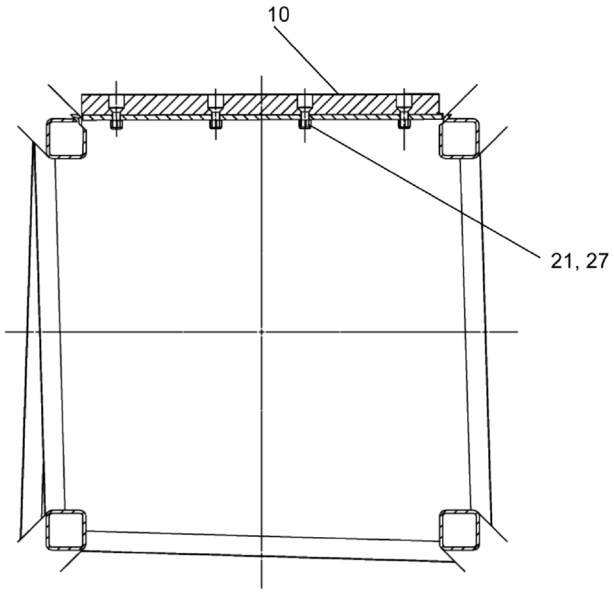

SECTION A-A

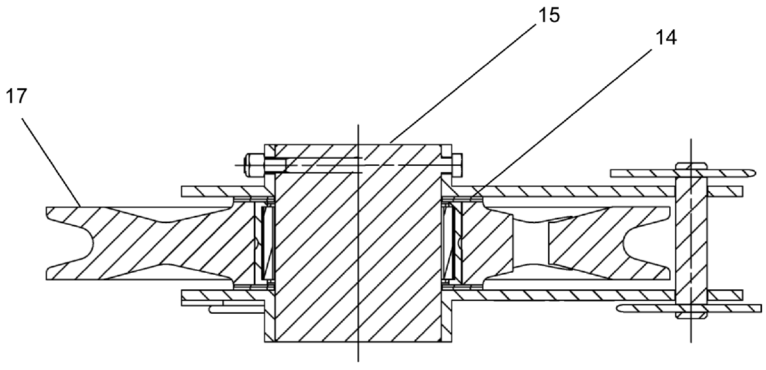

SECTION C-C

WHEN ORDERING PARTS, SPECIFY MODEL NUMBER, SERIAL NUMBER AND DESCRIPTION OF PARTS REQUIRED

REF	PART NO.	DESCRIPTION	QTY
	720A0343 (Rev. D)	*Offsettable Jib Assembly - 32'*	
1	1208-03	Shim, Round 0.625 X 1.25 X 0.075, ST Z	6
2	1213-10	Grease FTG, Zerk 0.25-28 STR-SHT	1
3	1213-3	Fitting, Grease 1/8 45°	1
4*	1240-68	Clamp	5
5	38404	Shaft	1
6	707-4058	Shim	8
7	707F8530	Pin	4
8*	**708A0282**	Anti-Two Block ASSY-Jibs (see page 109)	1
9	709-7290	Pin	4
10	709-7304	Wear Pad 18.00 X 3.00 X 1.00	1
11	714F0335	Link	1
12	714F0336	Link	1
13*	**717A0691**	Jib Stowage ASSY (see page 111)	1
14	718-0197	Spacer	4
15	718-0239	Shaft	1
16	718-0243	Pin	2
17	**718A1013**	Sheave ASSY 3/4 Wire Rope (see page 113)	1
18	718F0466	Stubhead	1
19	A35401-2	Roller	1
20	N04-500C000-25	Nut, HEX 0.50-13, ST Z GR5	8
21	NYL-375C000-25	Nut, HEX NYL-INS 0.375-16, ST SQC G5	5
22	NYL-625F000-25	Nut, HEX NYL-INS 0.625-18, ST Z G5	2
23	P22-188XB50-G2	Pin, Spring SLTD 0.1875X2.50, ST	2
24	PHP-178XC75-20	PIN, CTRHAIR 0.178 X 3.75 X 1.03, ST SQC	10
25	S01-375CE00-25	SCR, HHCS 0.375-16 X 5.00, ST SQC G5	1
26	S01-500CB00-Y8	SCR, HHCS 0.50-13X2.00, ST YZ GR8	8
27	S16-375C750-20	SCR, FHSHCS 0.375-16X0.75, ST Z	4
28*	SHF-375C750-25	SCR, HHCS FT 0.375-16 X 0.75, STZ G5	5
29	T123609	Jib	1
30*	W07-375X000-20	Washer Lock 3/8 MED	5
31	W07-500X000-20	WSH, LCK, MED SPLT 0.50, ST SQC	12
32*	WAW-37WX000-20	WSH, FL TYPA-WID 0.375, ST Z	5

* ITEM NOT SHOWN IN ILLUSTRATION

WHEN ORDERING PARTS, SPECIFY MODEL NUMBER, SERIAL NUMBER AND DESCRIPTION OF PARTS REQUIRED

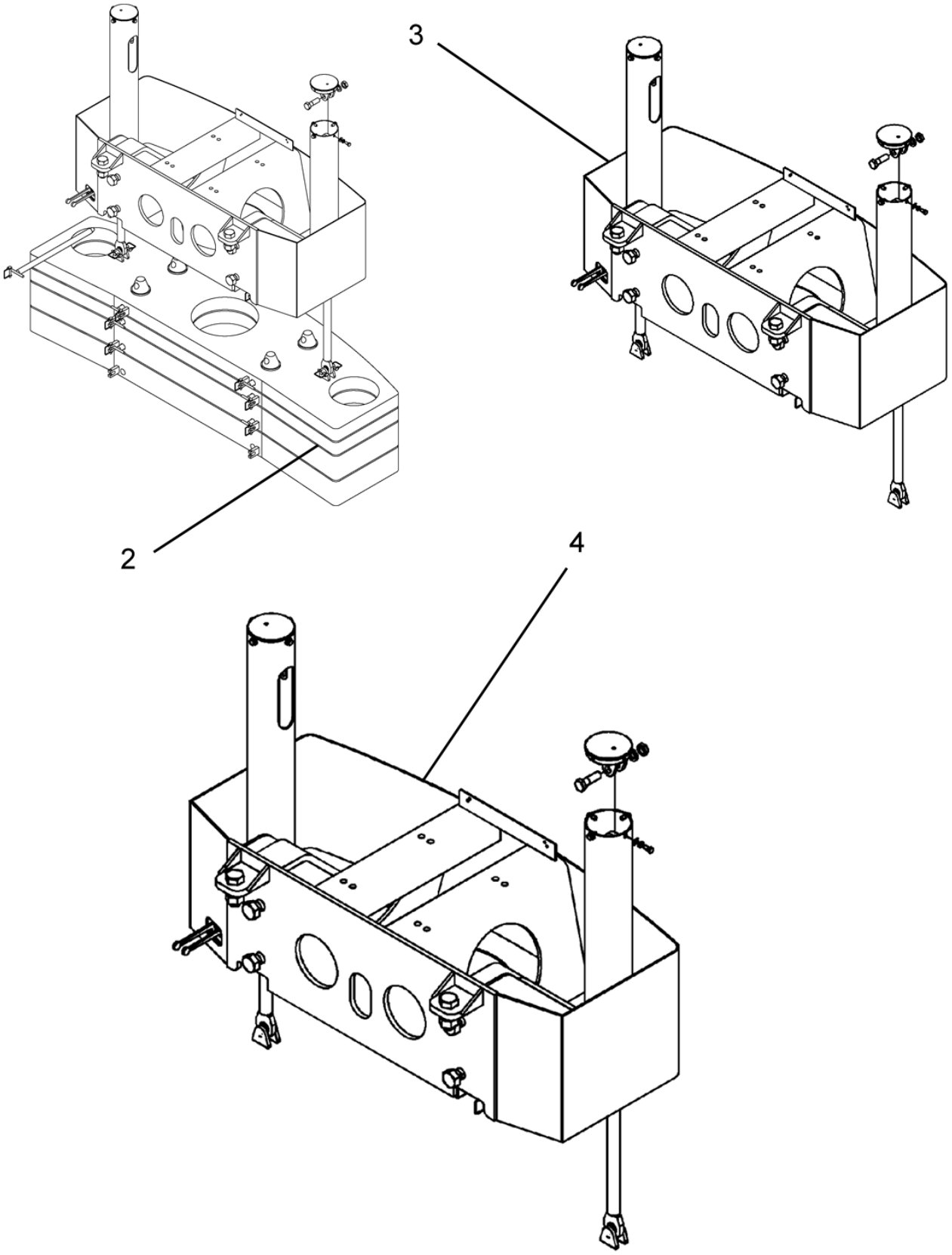

WHEN ORDERING PARTS, SPECIFY MODEL NUMBER, SERIAL NUMBER AND DESCRIPTION OF PARTS REQUIRED

REF	PART NO.	DESCRIPTION	QTY
	480-126-2017-CTWT* (Rev. 00)	*Counterweight Options*	
1**	**718A0461**	16,000# CTWT W/O AUX Winch (see page 119)	1
2	**722A0008**	15,000# CTWT W/ AUX Winch (see page 120)	1
3	**T129490**	4550# CTWT W/O AUX Winch (see page 125)	1
4	**T129491**	3,000# CTWT W/AUX Winch (see page 126)	1
5**	**717A0430**	Counterweight Mount Assembly (see page 128)	1
6**	**722A0069**	Front CTWT ASSY (see page 129)	1

* NOT PURCHASABLE AT THIS LEVEL
** ITEMS NOT SHOWN IN ILLUSTRATION

WHEN ORDERING PARTS, SPECIFY MODEL NUMBER, SERIAL NUMBER AND DESCRIPTION OF PARTS REQUIRED

REF	PART NO.	DESCRIPTION	QTY
	718A0461 (Rev. C)	*16,000# CTWT W/O AUX Winch*	
1	S01-750CF00-Y8	SCR, HHCS 0.75-10X6.00, ST SQC G8	4
2	NYH-750C000-22	Nut, Lock, .75-10	4
3	NYL-750C000-25	Nut, HEX NYL-INS 0.75-10, ST SQC G5	4
4	WAJ-750X000-20	WSH, FL HRD A-REG 0.75, ST SQC	8
5	718F0533	Slab, Weldment	1
6	**722A0008**	15,000# CTWT W/ AUX Winch (see page 120)	1

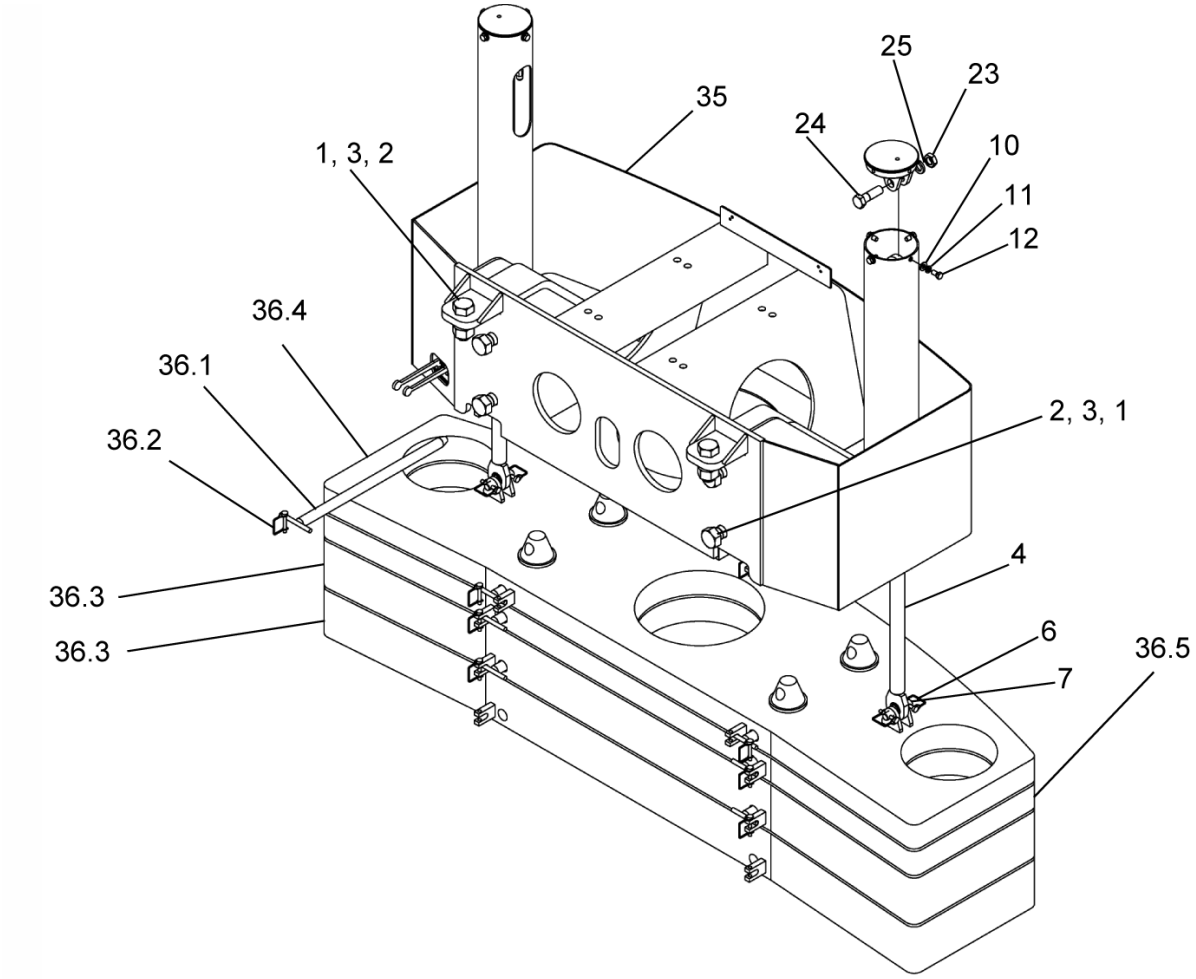

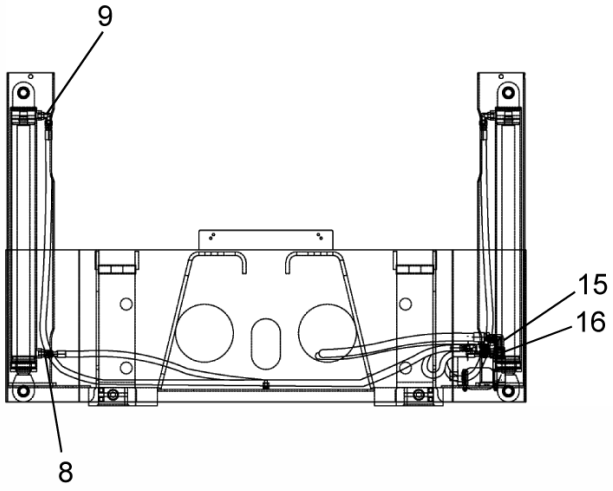

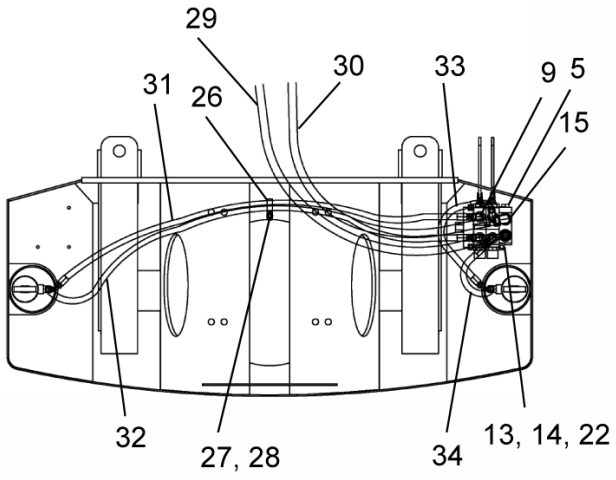

WHEN ORDERING PARTS, SPECIFY MODEL NUMBER, SERIAL NUMBER AND DESCRIPTION OF PARTS REQUIRED

LOAD KING BY CUSTOM TRUCK ONE SOURCE

COUNTERWEIGHT W/ AUX WINCH, 15,000LB

DATE: Released 08-2018

MODEL: 480-126

PAGE: 120

CHAPTER 1

REF	PART NO.	DESCRIPTION	QTY
	722A0008 (Rev. F)	*15,000# CTWT W/ AUX Winch*	
1	1210-74	1 1/2 Lock Washer	6
2	1200-304	1.50-6NC X 4.00 GD5	6
3	1205-146	1 1/2-6NC Lock Nut	6
4	**718-0157**	Cylinder - Counterweight (see page 122)	2
5	717 0326	Valve	1
6	1222-352	Pin, Safety Snap	4
7	717 0309	Pin	2
8	1219-441	Adapter, MJIC-8/MORB-8	2
9	1219-470	Elbow, 90, MJIC-8/MORB-8	6
10	1209-29	1/2 Flat Washer	8
11	1210-26	1/2 Lock Washer	8
12	1200-95	1/2-13NC X 1.00 GD5	8
13	1210-17	5/16 Lock Washer	3
14	1200-45	5/16-18NC X 2.75 GD5	3
15	12019-789	12M O-Ring X 12M JIC LONG 90	1
16	1219-389	Adapter	1
17*	718F0364	Counter Weight Mount	2
18*	1203-213	7/8 X 3.00 12PT Bolt	6
19*	1209-37	7/8 Hard Washer	6
20*	56407	Tube	6
21*	722 0057	Hose Kit	1
22	1205-25	5/16-18 NC Nut	3
23	1205-118	1-8NC Jam Nut	2
24	1200-278	1-8NC X 3.25 Bolt	2
25	1210-50	1" Lock Washer	2
26	200B2007-55	Clamp	1
27	1209-4	3/8 Flat Washer	1
28	1205-45	3/8-16NC Lock Nut	1
29	MK212382-160	Hose	1
30	722 0058-164	Hose	1
31	717 0631-70	Hose	1
32	MK213521-100	Hose	1
33	722 0059-21	Hose	1
34	MK213521-40.5	Hose	1
35	**722A0116**	Counterweight Mount Assembly (see page 124)	1
36*	722A0195	Counterweight Kit	1
36.1	717F0313	Pin	8
36.2	1222-352	Pin, Safety Snap	8
36.3	718F0828	4000LB Counterweight	2
36.4	722F0062	2000LB Top Slab	1
36.5	722F0063	2000LB Slab	1

* ITEM NOT SHOWN IN ILLUSTRATION

WHEN ORDERING PARTS, SPECIFY MODEL NUMBER, SERIAL NUMBER AND DESCRIPTION OF PARTS REQUIRED

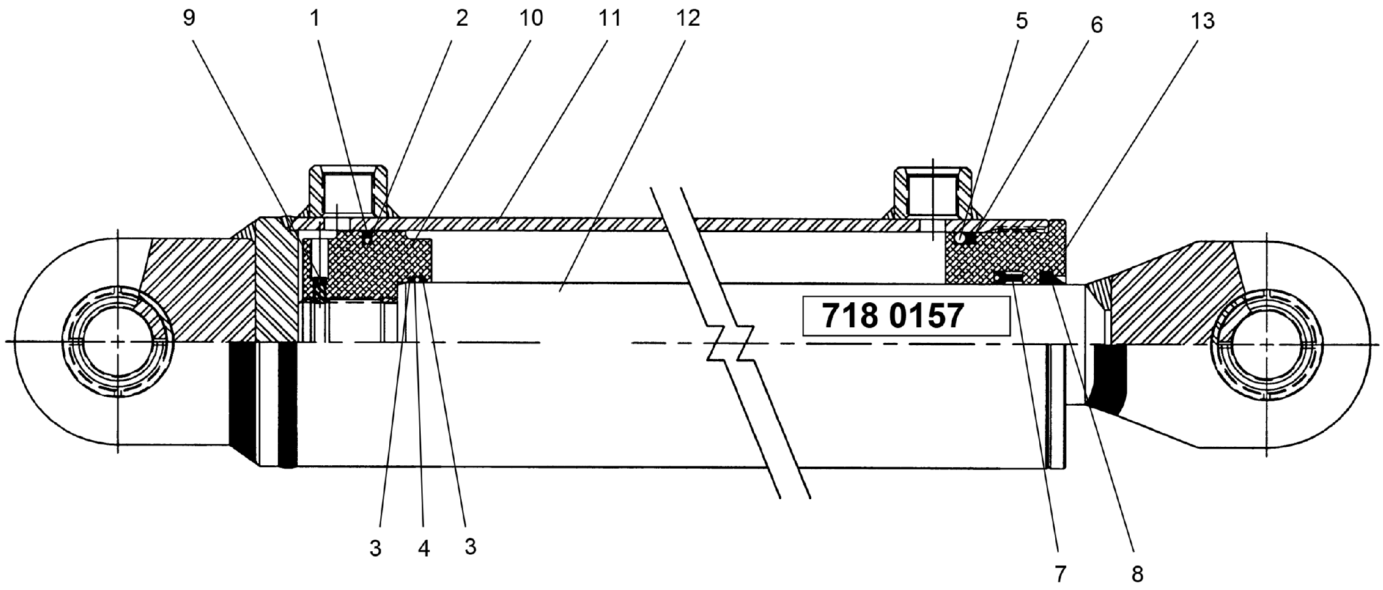

WHEN ORDERING PARTS, SPECIFY MODEL NUMBER, SERIAL NUMBER AND DESCRIPTION OF PARTS REQUIRED

REF	PART NO.	DESCRIPTION	QTY
	718-0157 (Rev. A)	*Cylinder - Counterweight*	
	218711*	Seal Kit	1
1	218722	TFE Seal	1
2	218723	O-Ring	1
3	218724	Back-Up Ring	2
4	218725	O-Ring	1
5	218726	O-Ring	1
6	218727	Back-Up Ring	1
7	215123	Loaded U-Cup	1
8	215124	Rod Wiper	1
9	218728	Nylok Set Screw	1
10	218729	Piston	1
11	218730	Barrel Assembly	1
12	218731	Rod Assembly	1
13	218732	Internal Head	1

* (Items 1 thru 8)

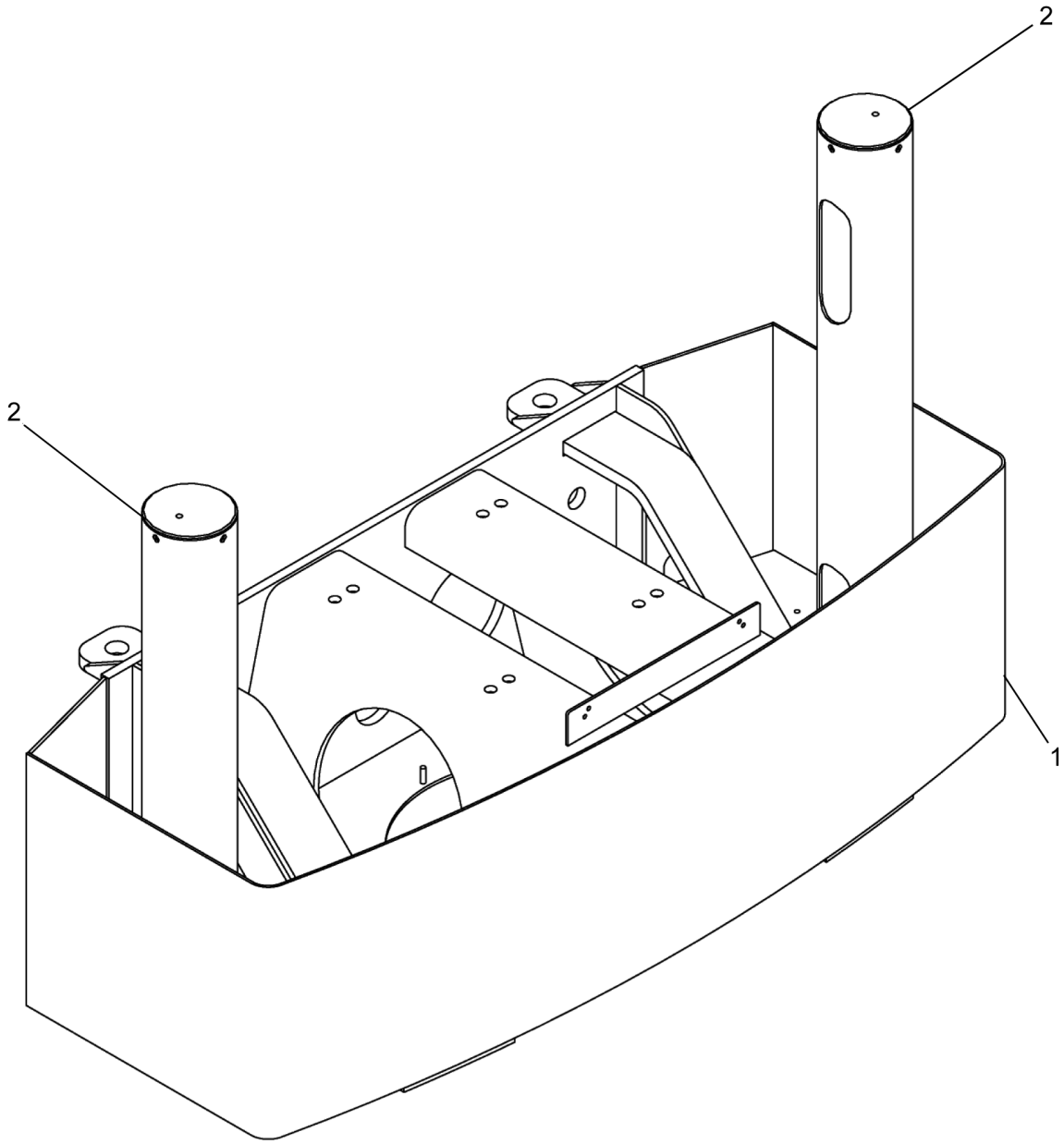

REF	PART NO.	DESCRIPTION	QTY
	722A0116 (Rev. A)	*Counterweight Mount Assembly*	
1	722F0032	Counterweight Mount	1
2	718F0558	Cap, Cylinder	2

REF	PART NO.	DESCRIPTION	QTY
	T129490 (Rev. A)	*4550# CTWT W/O AUX Winch*	
1	W07-A50X000-20	1 1/2 Lock Washer	6
2	S01-A50CD00-25	1.50-6NC X 4.00 GD5	6
3	NYH-A50C000-22	1 1/2-6NC Lock Nut	6
4	**718-0157**	Cylinder - Counterweight (see page 122)	2
5	717 0326	Valve	1
6*	718F0533	Slab, Weldment	1
7*	1209-58	Washer, Flat, .75 Hardened	8
8	1219-441	Adapter, MJIC-8/MORB-8	2
9	1219-470	Elbow, 90, MJIC-8/MORB-8	6
10	WAN-50NX000-20	1/2 Flat Washer	8
11	W07-500X000-20	WSH, LCK, MED SPLT 0.50, ST SQC	8
12	SHF-500CA00-25	SCR, HHCS FT 0.50-13 X 1.00, ST SQC G5	8
13	W07-312X000-20	WSH, LCK, MED SPLT 0.3125, ST SQC	3
14	S01-312CB75-25	5/16-18NC X 2.75 GD5	3
15	12019-789	12M O-Ring X 12M JIC LONG 90	1
16	1219-389	Adapter	1
17*	718F0364	Counter Weight Mount	2
18*	SFP-875CC00-AP	7/8 X 3.00 12PT Bolt	6
19*	WAH-87NX000-Y2	7/8 Hard Washer	6
20*	56407	Tube	6
21*	NYL-750C000-25	Nut, HEX NYL-INS 0.75-10, ST SQC G5	4
22	N04-312C000-25	Nut, HEX 0.3125-18, ST Z GR5	3
23	N05-A00C000-25	1-8NC Jam Nut	2
24	S01-A00CC50-25	1-8NC X 3.25 Bolt	2
25	W07-A00X000-20	1" Lock Washer	2
26	200B2007-55	Clamp	1
27	WAW-37WX000-20	WSH, FL TYPA-WID 0.375, ST Z	1
28	NYL-375C000-25	Nut, HEX NYL-INS 0.375-16, ST SQC G5	1
29	MK212382-160	Hose	1
30	722 0058-164	Hose	1
31	717 0631-70	Hose	1
32	MK213521-100	Hose	1
33	722 0059-21	Hose	1
34	MK213521-40.5	Hose	1
35	**722A0116**	Counterweight Mount Assembly (see page 124)	1
36*	1203-258	Capscrew	1
37*	NYH-750C000-22	Nut, Lock, .75-10	4

* ITEM NOT SHOWN IN ILLUSTRATION

WHEN ORDERING PARTS, SPECIFY MODEL NUMBER, SERIAL NUMBER AND DESCRIPTION OF PARTS REQUIRED

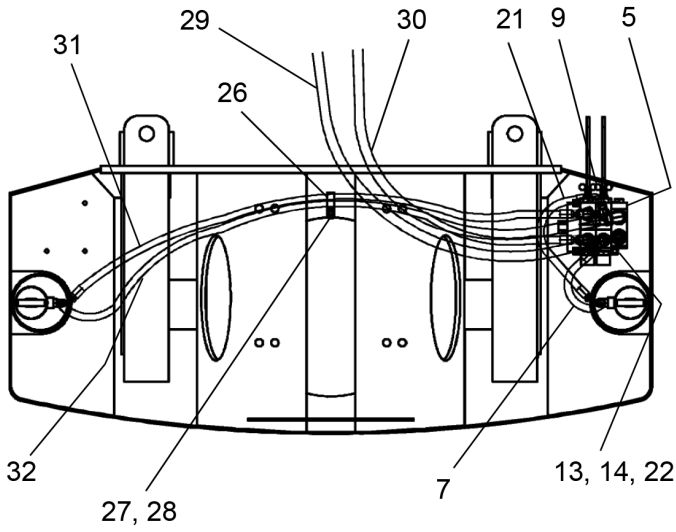
29
30
21
9
5
31
26
32
27, 28
7
13, 14, 22

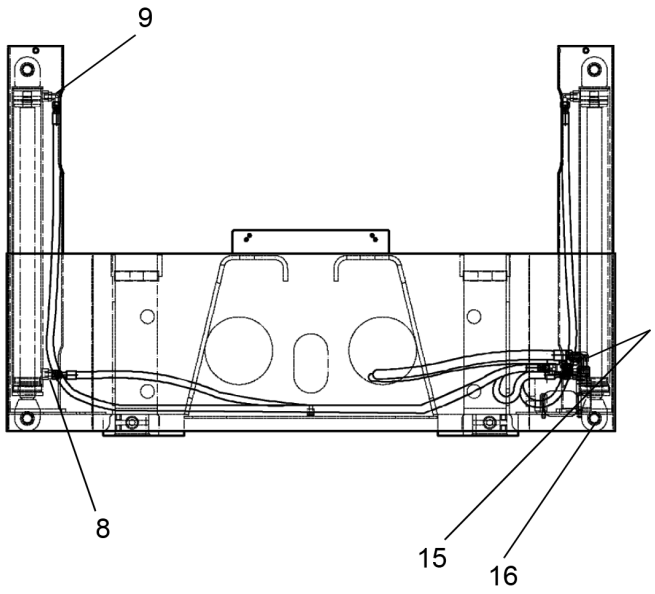
9
8
15
16

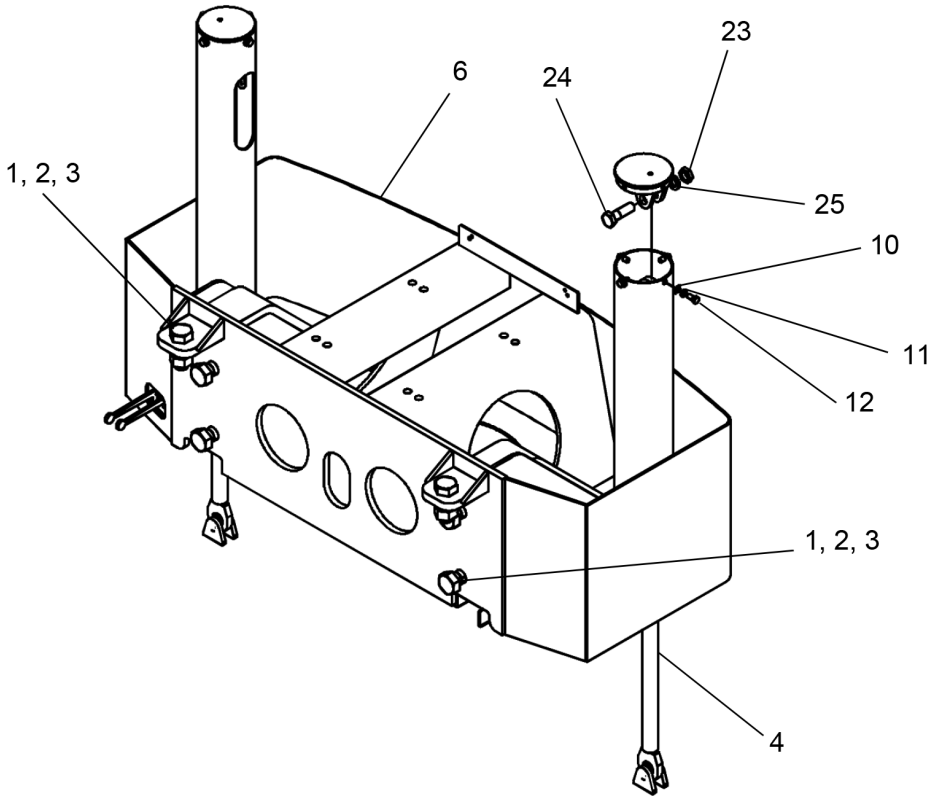
23
6
24
1, 2, 3
25
10
11
12
1, 2, 3
4

REF	PART NO.	DESCRIPTION	QTY
	T129491 (Rev. A)	*3,000# CTWT W/AUX Winch*	
1	W07-A50X000-20	1 1/2 Lock Washer	6
2	S01-A50CD00-25	1.50-6NC X 4.00 GD5	6
3	NYH-A50C000-22	1 1/2-6NC Lock Nut	6
4	**718-0157**	Cylinder - Counterweight (see page 122)	2
5	717 0326	Valve	1
6	**722A0116**	Counterweight Mount Assembly (see page 124)	1
7	MK213521-40.5	Hose	1
8	1219-441	Adapter, MJIC-8/MORB-8	2
9	1219-470	Elbow, 90, MJIC-8/MORB-8	6
10	WAN-50NX000-20	1/2 Flat Washer	8
11	W07-500X000-20	WSH, LCK, MED SPLT 0.50, ST SQC	8
12	SHF-500CA00-25	SCR, HHCS FT 0.50-13 X 1.00, ST SQC G5	8
13	W07-312X000-20	WSH, LCK, MED SPLT 0.3125, ST SQC	3
14	S01-312CB75-25	5/16-18NC X 2.75 GD5	3
15	12019-789	12M O-Ring X 12M JIC LONG 90	1
16	1219-389	Adapter	1
17*	718F0364	Counter Weight Mount	2
18*	SFP-875CC00-AP	7/8 X 3.00 12PT Bolt	6
19*	WAH-87NX000-Y2	7/8 Hard Washer	6
20*	56407	Tube	6
21	722 0059-21	Hose	1
22	N04-312C000-25	Nut, HEX 0.3125-18, ST Z GR5	3
23	N05-A00C000-25	1-8NC Jam Nut	2
24	S01-A00CC50-25	1-8NC X 3.25 Bolt	2
25	W07-A00X000-20	1" Lock Washer	2
26	200B2007-55	Clamp	1
27	WAW-37WX000-20	WSH, FL TYPA-WID 0.375, ST Z	1
28	NYL-375C000-25	Nut, HEX NYL-INS 0.375-16, ST SQC G5	1
29	MK212382-160	Hose	1
30	722 0058-164	Hose	1
31	717 0631-70	Hose	1
32	MK213521-100	Hose	1

* ITEM NOT SHOWN IN ILLUSTRATION

WHEN ORDERING PARTS, SPECIFY MODEL NUMBER, SERIAL NUMBER AND DESCRIPTION OF PARTS REQUIRED

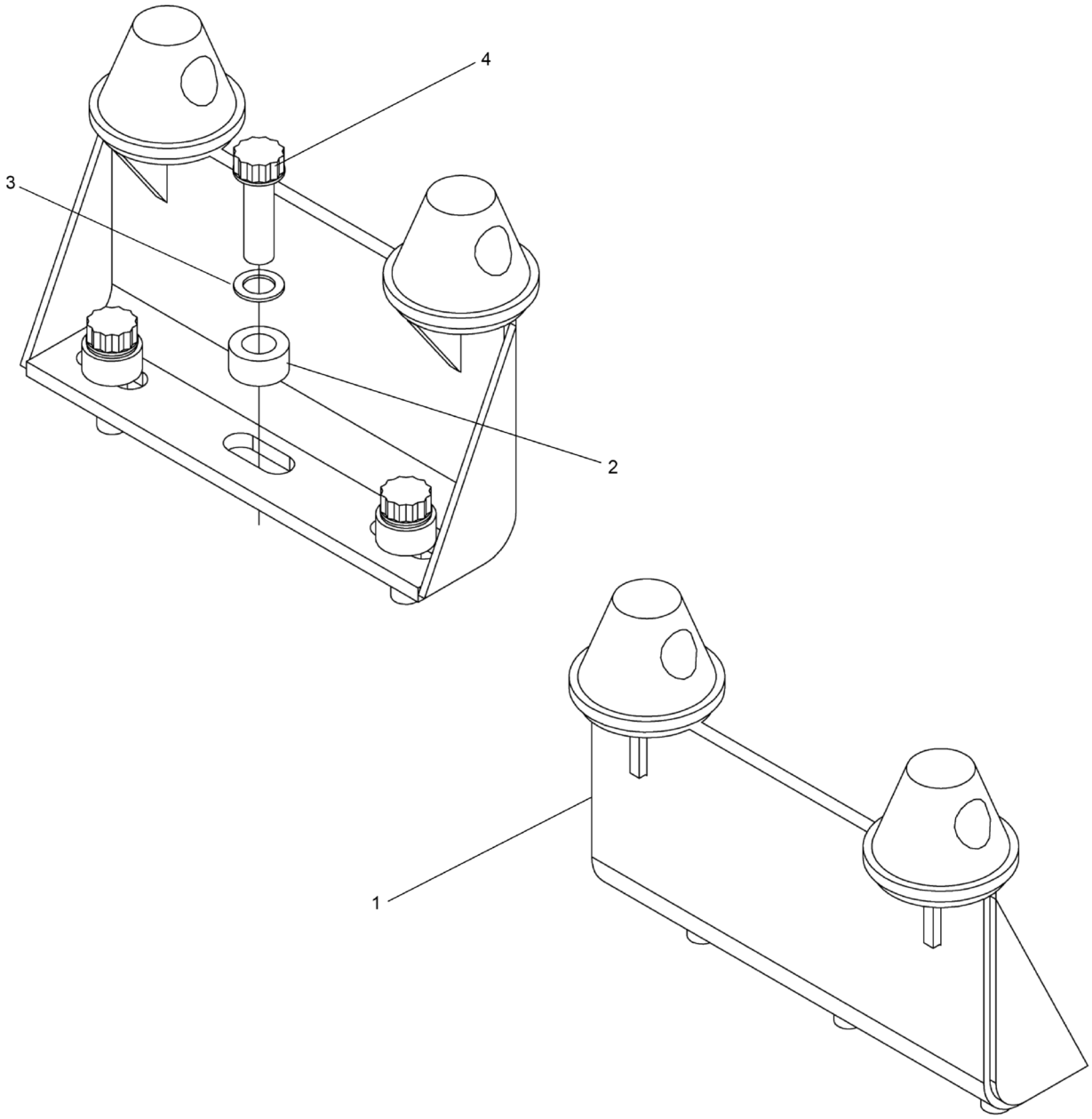

REF	PART NO.	DESCRIPTION	QTY
	717A0430 (Rev. A)	*Counterweight Mount Assembly*	
1	717F0320	CWT Mount	2
2	56407	Tube	6
3	1209-37	7/8 Hard Washer	6
4	1203-213	7/8 X 3.00 12PT Bolt	6

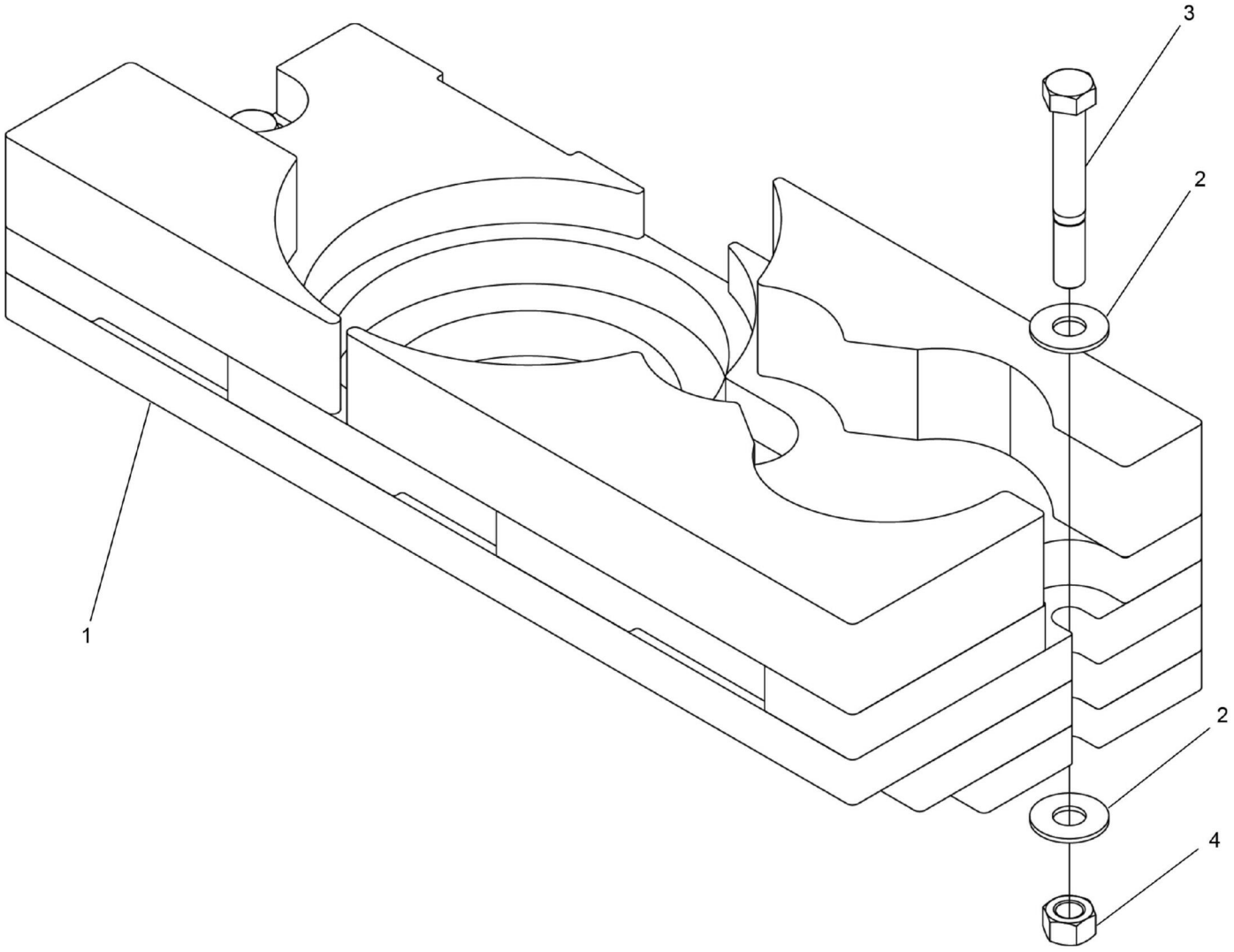

REF	PART NO.	DESCRIPTION	QTY
	722A0069 (Rev. A)	*Front CTWT ASSY*	
1	722F0070	Front Counterweight	1
2	1209-30	1" Flat Washer	4
3	1200-294	1-8UNC X 7.00 Bolt	2
4	1205-124	1-8UNC Lock Nut	2

WHEN ORDERING PARTS, SPECIFY MODEL NUMBER, SERIAL NUMBER AND DESCRIPTION OF PARTS REQUIRED

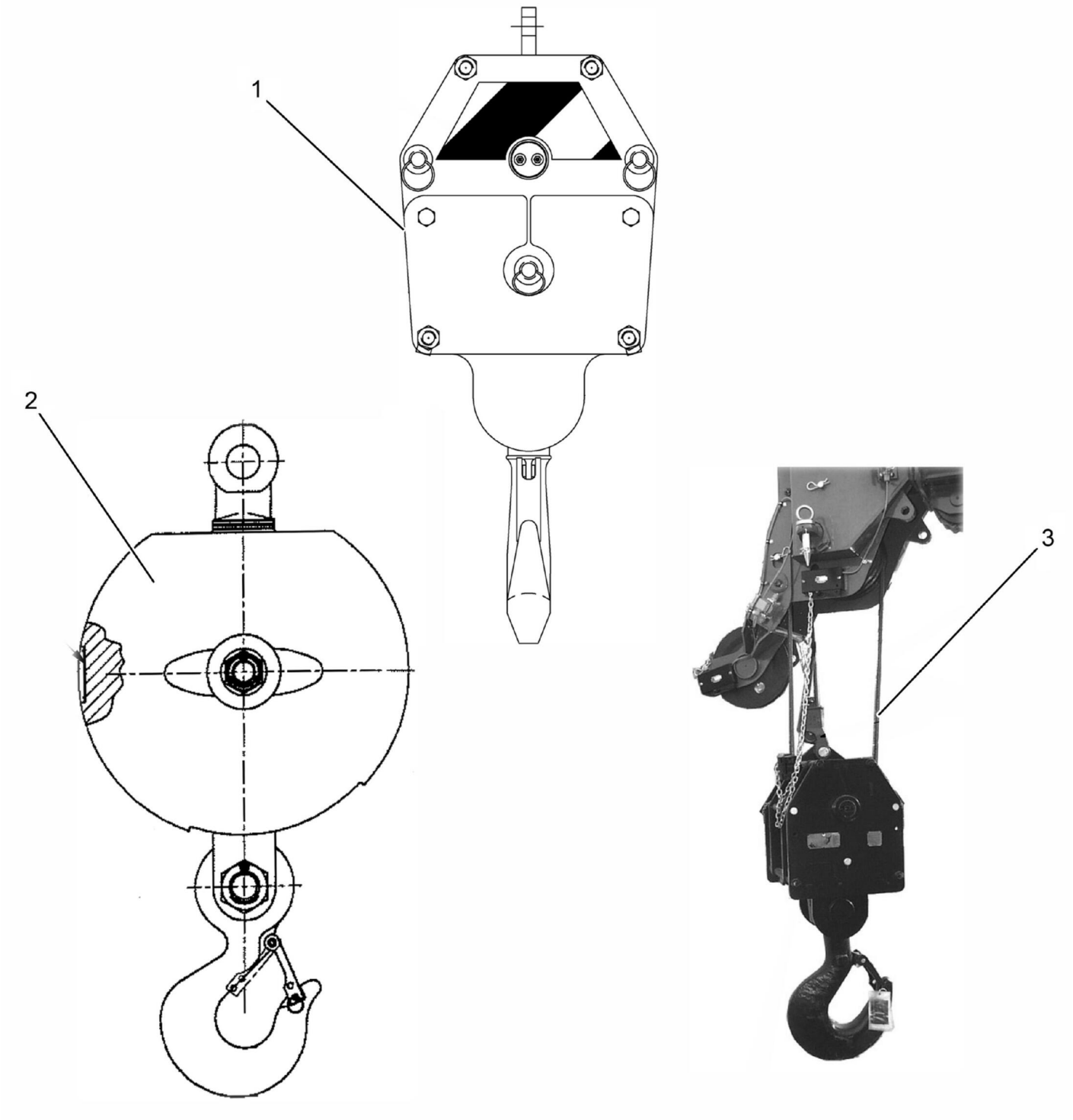

WHEN ORDERING PARTS, SPECIFY MODEL NUMBER, SERIAL NUMBER AND DESCRIPTION OF PARTS REQUIRED

REF	PART NO.	DESCRIPTION	QTY
	480-126-2017-HK/LD BALLS & ROPE* (Rev. 00)	*Hook Block & Wire Rope Options*	
1	**T162924**	Hook Block ASSY, 5 SHV, 80T, 3/4 IN (see page 132)	1
1A	**T112215**	Hook Block, 5 Sheave, 75 Ton (see page 136)	1
1B	**T112264**	Hook Block ASSY (see page 139)	1
1C	**T129735**	Hook Block, 4 Sheave, 45 Ton (see page 142)	1
2	**410-4069**	Overhaul Ball, 12 Ton, 419#, 3/4" (see page 145)	1
3	**718A0519**	Rotation-Resistant Cable 3/4 X 600' (see page 147)	1
3A	**718A0518**	Regular Lay Cable, 3/4 x 600' (see page 149)	1

* NOT PURCHASABLE AT THIS LEVEL

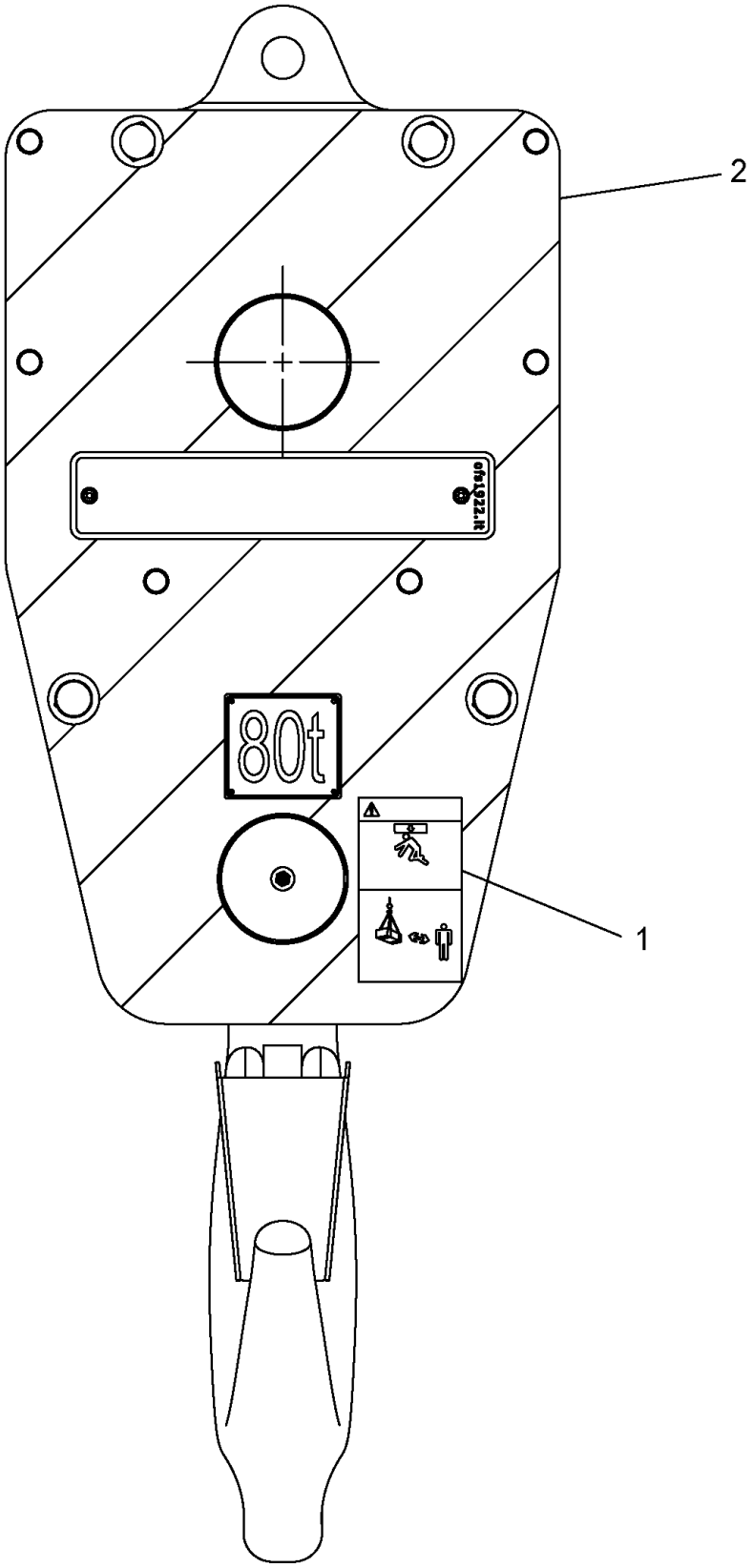

WHEN ORDERING PARTS, SPECIFY MODEL NUMBER, SERIAL NUMBER AND DESCRIPTION OF PARTS REQUIRED

LOAD KING BY CUSTOM TRUCK ONE SOURCE

HOOK BLOCK ASSEMBLY 5 SHEAVE, 80T, 3/4 IN

DATE: Released 08-2018

MODEL: 480-126

PAGE: 132

CHAPTER 1

REF	PART NO.	DESCRIPTION	QTY
	T162924 (Rev. A)	*Hook Block ASSY, 5 SHV, 80T, 3/4 IN*	
1	T140607	Decal, Crush Hazard Stay Clear Load (VERT)(English)	2
2	**T152575**	Hook Block, 5SHV, 80T, 3/4 IN. (see page 134)	1

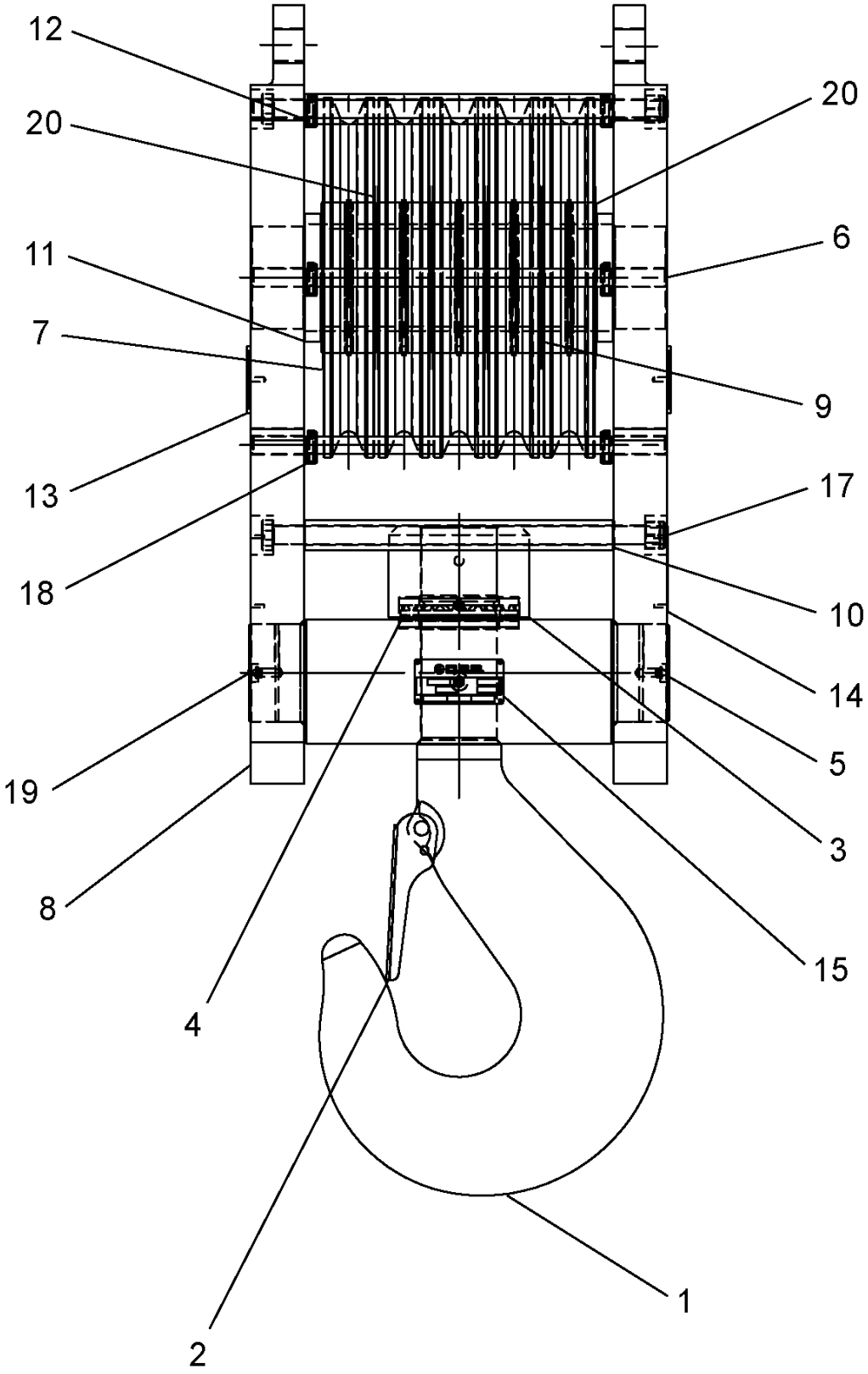

WHEN ORDERING PARTS, SPECIFY MODEL NUMBER, SERIAL NUMBER AND DESCRIPTION OF PARTS REQUIRED

LOAD KING BY CUSTOM TRUCK ONE SOURCE

HOOK BLOCK ASSY, 5 SHEAVE, 80TON, 3/4"

DATE: Released 08-2018

MODEL: 480-126

PAGE: 134

CHAPTER 1

REF	PART NO.	DESCRIPTION	QTY
	T152575 (Rev. A)	*Hook Block, 5SHV, 80T, 3/4 IN.*	
1	229154	Single Hook	1
2	229155	Lockable Safety Latch	1
3	229156	Hook Nut	1
4	229157	CUSCINETTO ASSIALE A RULLI	1
5	229158	Crossbar	1
6	229159	Sheaves Shaft	1
7	229160	Rope Sheaves	5
8	229161	Sidewall	2
9	229162	Sheave Spacer	4
10	229163	Tie Rod Spacer	4
11	229164	External Spacer	2
12	229165	Rope Protector Pin	6
13	229166	Load King Aluminum Plate	2
14	T152575-SWL 80t Plate	SWL 80t Plate	2
15	T152575-Identification Plate	Identification Plate	1
16*	T152575-ANELLO SEEGER	ANELLO SEEGER I-170	5
17	229167	Tie Rod	4
18	T152575-Linch Pin	Linch Pin	12
19	229168	Grease Nipple	4
20	229169	Ball Bearing	10
21*	T152575-AUTOBLOCCANTE	M20 AUTOBLOCCANTE	4

* ITEM NOT SHOWN IN ILLUSTRATION

WHEN ORDERING PARTS, SPECIFY MODEL NUMBER, SERIAL NUMBER AND DESCRIPTION OF PARTS REQUIRED

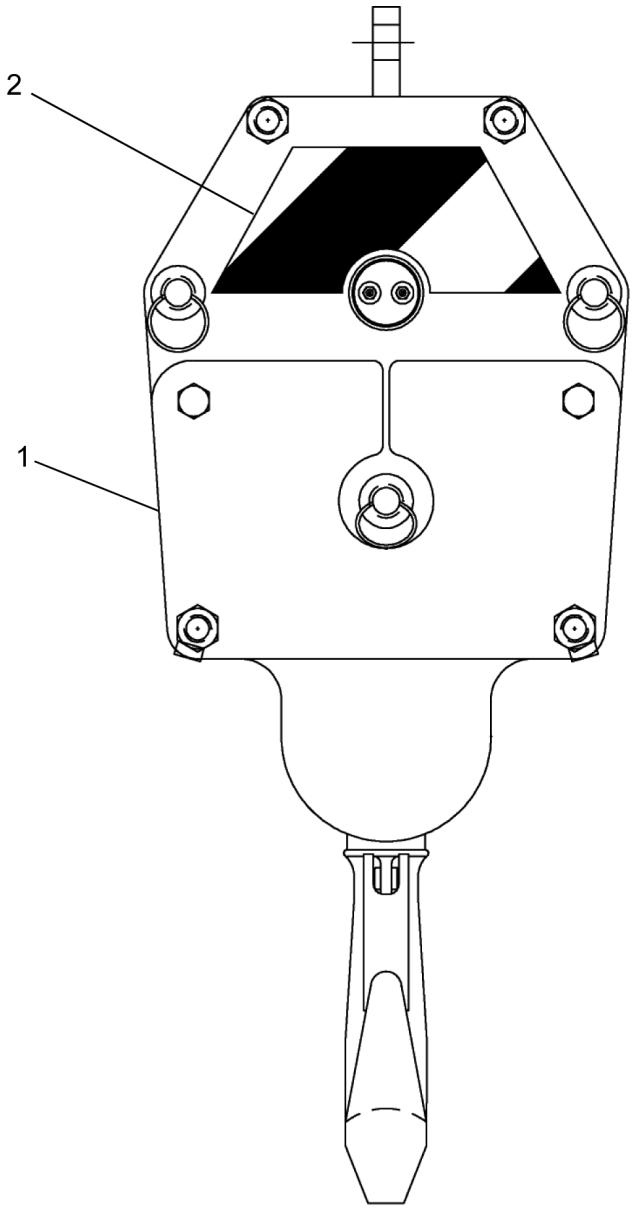

REF	PART NO.	DESCRIPTION	QTY
	T112215 (Rev. A)	*Hook Block, 5 Sheave, 75 Ton*	
1	**410-4074**	Hook Block 5 SHV 75T (see page 137)	1
2	1006865	Decal, Hook Block	2

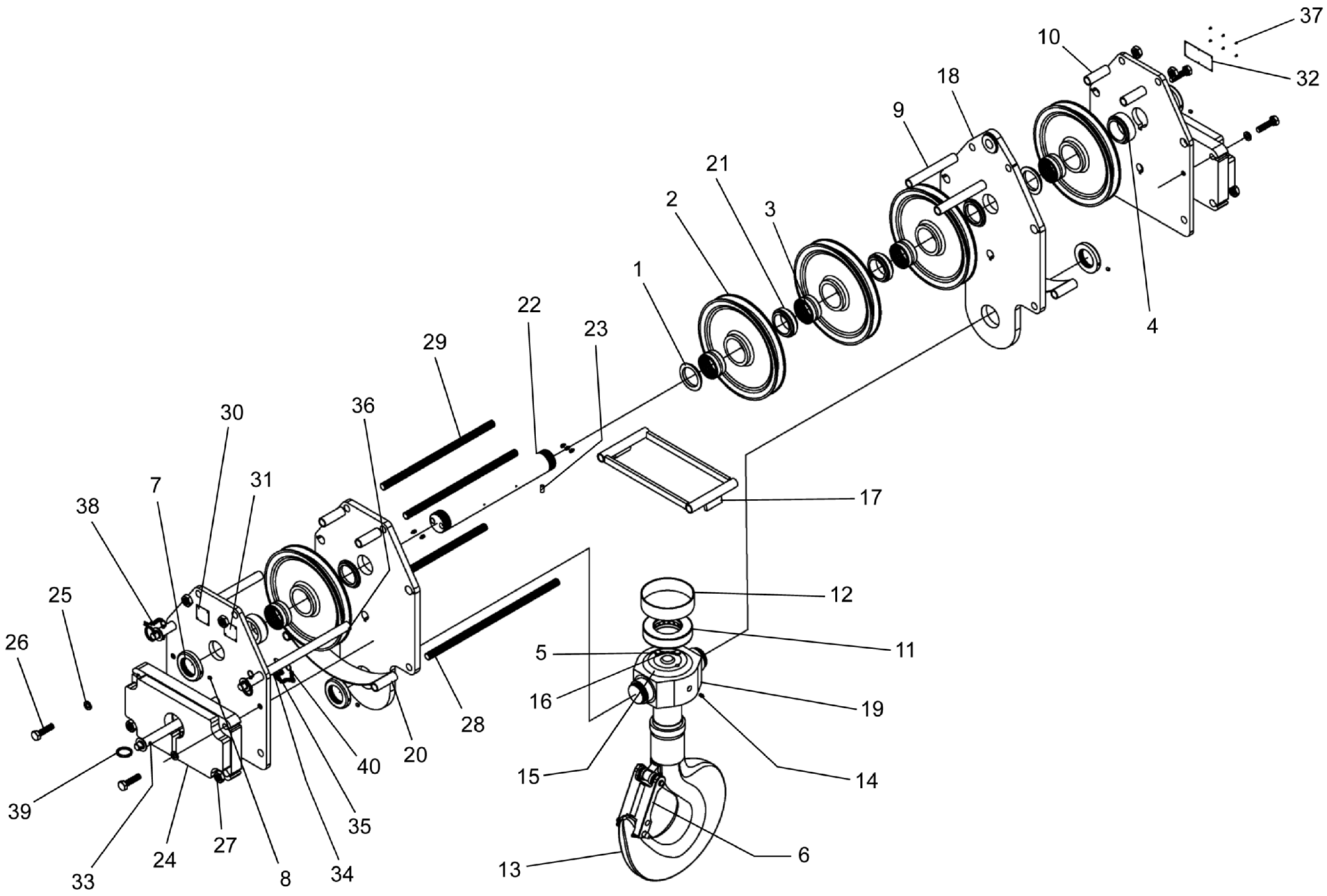

WHEN ORDERING PARTS, SPECIFY MODEL NUMBER, SERIAL NUMBER AND DESCRIPTION OF PARTS REQUIRED

LOAD KING BY CUSTOM TRUCK ONE SOURCE

HOOK BLOCK 5 SHEAVE, 75 TONS, 3/4"

DATE: Released 08-2018

MODEL: 480-126

PAGE: 137

CHAPTER 1

REF	PART NO.	DESCRIPTION	QTY
	410-4074 (Rev. 00)	*Hook Block 5 SHV 75T*	
1	217849	Wash TH 4.25ODX3.00IDX0.45TKBR	4
2	217850*	SHV WC 15.6ODX3.75IDX0.75TK	5
3	215911*	BRG R 3.75ODX3.00IDX1.75WD	5
4	217851	WASH TH 4.25ODX3.00IDX1.28TKBR	2
5	217119	1/32 STN Safety Wire	1
6	217852**	80-100J Latch Kit Installed	1
7	217125	-8Nut R 3	4
8	215898	Screw Set SC0.38ODX0.50LGNC CN	4
9	217853	SPR 1.32ODX1.05IDX9.14LG	2
10	217854	SPR 1.32ODX1.05IDX3.94LG	4
11	217110	40TP114RT BRG	1
12	217111	BRG Cover	1
13	217112	80HK&Nut CST	1
14	215304	Fitting 1/8NPT	7
15	217118	L WASH 1/2	2
16	217117	OSCR HX 1/2 LW	2
17	217867	QRJ 16R Guide AY	1
18	217866	QRQN 16PL Group	1
19	217865	JD&THSG 41/2	1
20	217864	QRJ 16R Guide AY	2
21	217863	Wash TH 4.25ODX3.00IDX1.36TKBR	2
22	217862	QN CPIN 3.00ODX22.3LG	1
23	215337	Pin Spirol 0.50ODX1.00LG	1
24	217861	QRJ 16CK WT AY 3.5	2
25	215287	L WASH 3/4	4
26	215329	3SCR HX 3/4	4
27	215280	-8Nut J 1	8
28	217860	T Bolt 1.00ODX26.0LG ALL THD	2
29	217859	T Bolt 1.00ODX22.0LG ALL THD	2
30	220256	Name Plate Load King F/Block	1
31	220253	CAUT Plate Load King	1
32	217135	QRJ CAUT Plate	1
33	217856	Pin Latch 1.25ODX21.6LG ZNCQRJ	3
34	215327	Screw Cap HX0.38ODX1.00LG NC	1
35	215301	S Hook	1
36	215305	Pin SPIROL 0.25ODXO.50LG	3
37	216955	Screw DR RD 0.14ODX0.25LGNC CD	14
38	217895	No-3 MACH Twist Link Chain	2
39	215303	2 Ring Split	3
40	215290	Pin QK-REL 0.38ODX1.50LG ZNC	3

* THESE PART NUMBERS CAN BE ORDERED AS ONE SHEAVE ASSEMBLY: SPECIFY P/N 219485
** WHEN ORDERING REPLACEMENT LATCH KIT, SPECIFY P/N: 217855

WHEN ORDERING PARTS, SPECIFY MODEL NUMBER, SERIAL NUMBER AND DESCRIPTION OF PARTS REQUIRED

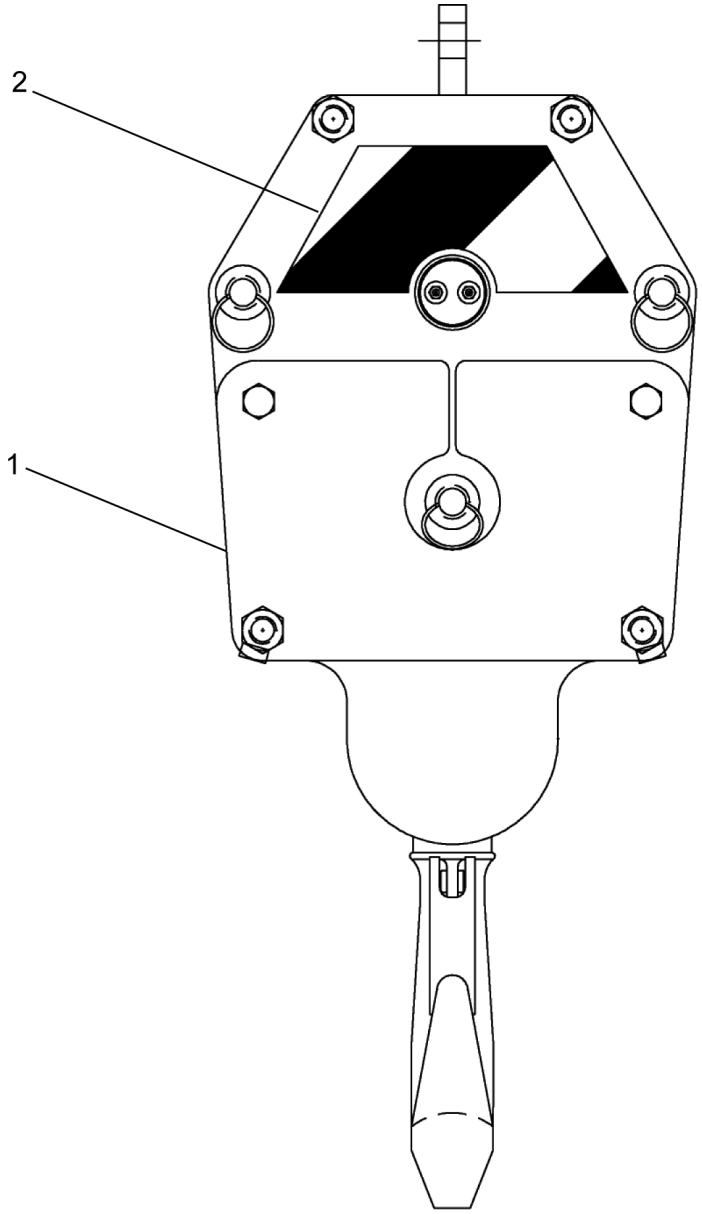

REF	PART NO.	DESCRIPTION	QTY
	T112264 (Rev. A)	*Hook Block ASSY*	
1	**3208U38D1**	Hook Block 5SHV 60T 3/4" 1204LB (see page 140)	1
2	1006865	Decal, Hook Block	2

WHEN ORDERING PARTS, SPECIFY MODEL NUMBER, SERIAL NUMBER AND DESCRIPTION OF PARTS REQUIRED

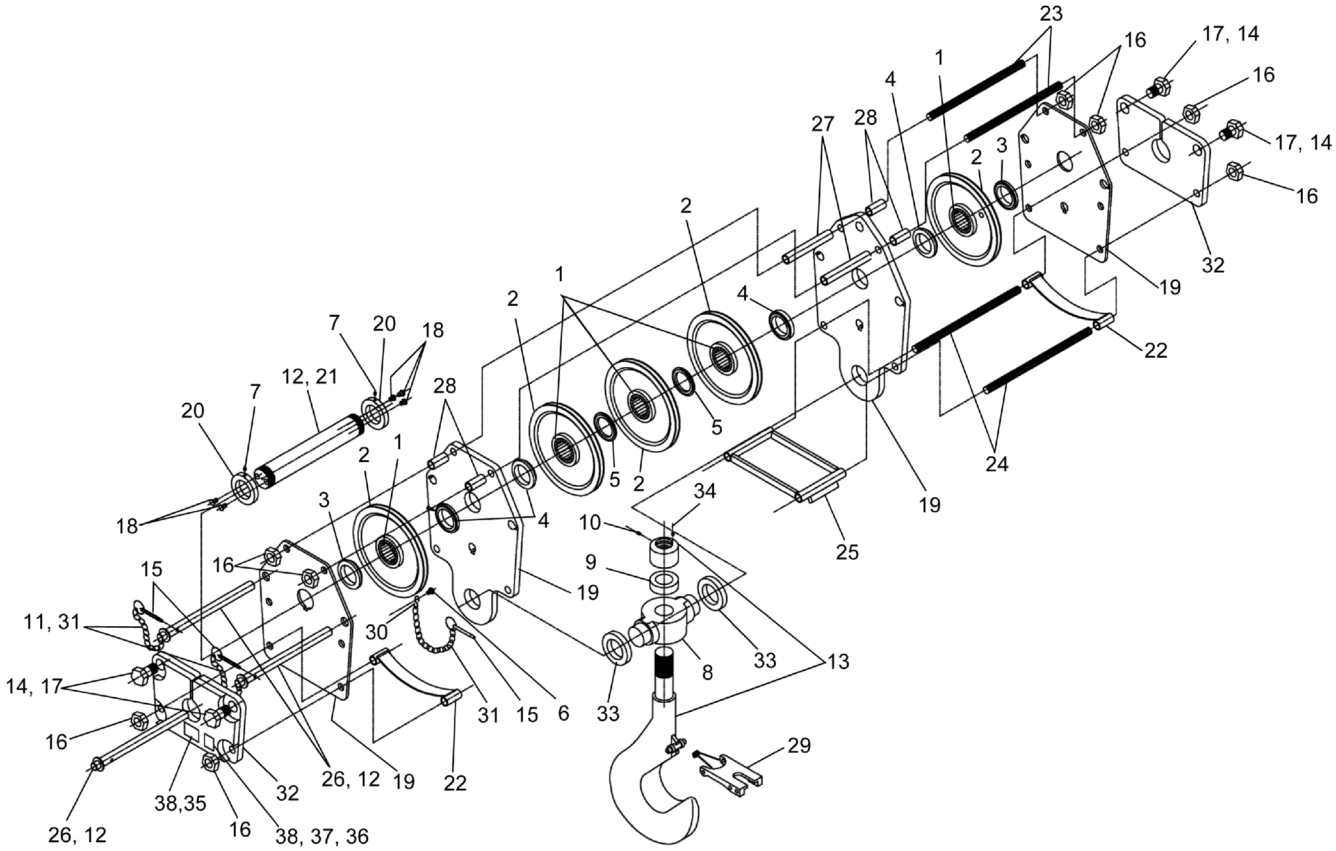

WHEN ORDERING PARTS, SPECIFY MODEL NUMBER, SERIAL NUMBER AND DESCRIPTION OF PARTS REQUIRED

LOAD KING BY CUSTOM TRUCK ONE SOURCE

HOOK BLOCK 5 SHEAVE, 60 TONS, 3/4"

DATE: Released 08-2018

MODEL: 480-126

PAGE: 140

CHAPTER 1

REF	PART NO.	DESCRIPTION	QTY
	3208U38D1 (Rev. 00)	*Hook Block 5SHV 60T 3/4" 1204LB*	
1	215911	BRG R 3.75ODX3.00IDX1.75WD	5
2	225234	SHV WC 16.0 OD X 3.75 ID X .75TK	5
3	217851	WASH TH 4.25ODX3.00IDX1.28TKBR	2
4	217849	Wash TH 4.25ODX3.00IDX0.45TKBR	4
5	225235	Thrust Washer	2
6	215327	Screw Cap HX0.38ODX1.00LG NC	1
7	215898	Screw Set SC0.38ODX0.50LGNC CN	2
8	225236	Housing	1
9	217893	Thrust Bearing	1
10	215286	-28Fitting 1/4	1
11	215303	2 Ring Split	3
12	215305	Pin SPIROL 0.25ODXO.50LG	4
13	225237	Hook & Nut	1
14	215287	L WASH 3/4	4
15	215290	Pin QK-REL 0.38ODX1.50LG ZNC	3
16	215280	-8Nut J 1	8
17	215901	3/4 Screw	4
18	215304	Fitting 1/8NPT	5
19	225238	QRQN 16PL Group	1
20	217125	-8Nut R 3	2
21	225239	Center Pin	1
22	217864	QRJ 16R Guide AY	2
23	225240	Tie Bolt	2
24	225241	Tie Bolt	2
25	225242	QRJ 16R Guide AY	1
26	225243	20 L Pin 1 1/4	3
27	219482	Spacer	2
28	217854	SPR 1.32ODX1.05IDX3.94LG	4
29	215910	Latch Kit	1
30	215301	S Hook	1
31	215291	Chain	3
32	225244	Cheek WT.	2
33	219477	Spacer	2
34	225245	1/2 Set Screw	1
35	217135	QRJ CAUT Plate	1
36	220253	CAUT Plate Load King	1
37	220256	Name Plate Load King F/Block	1
38	216955	Screw DR RD 0.14ODX0.25LGNC CD	14

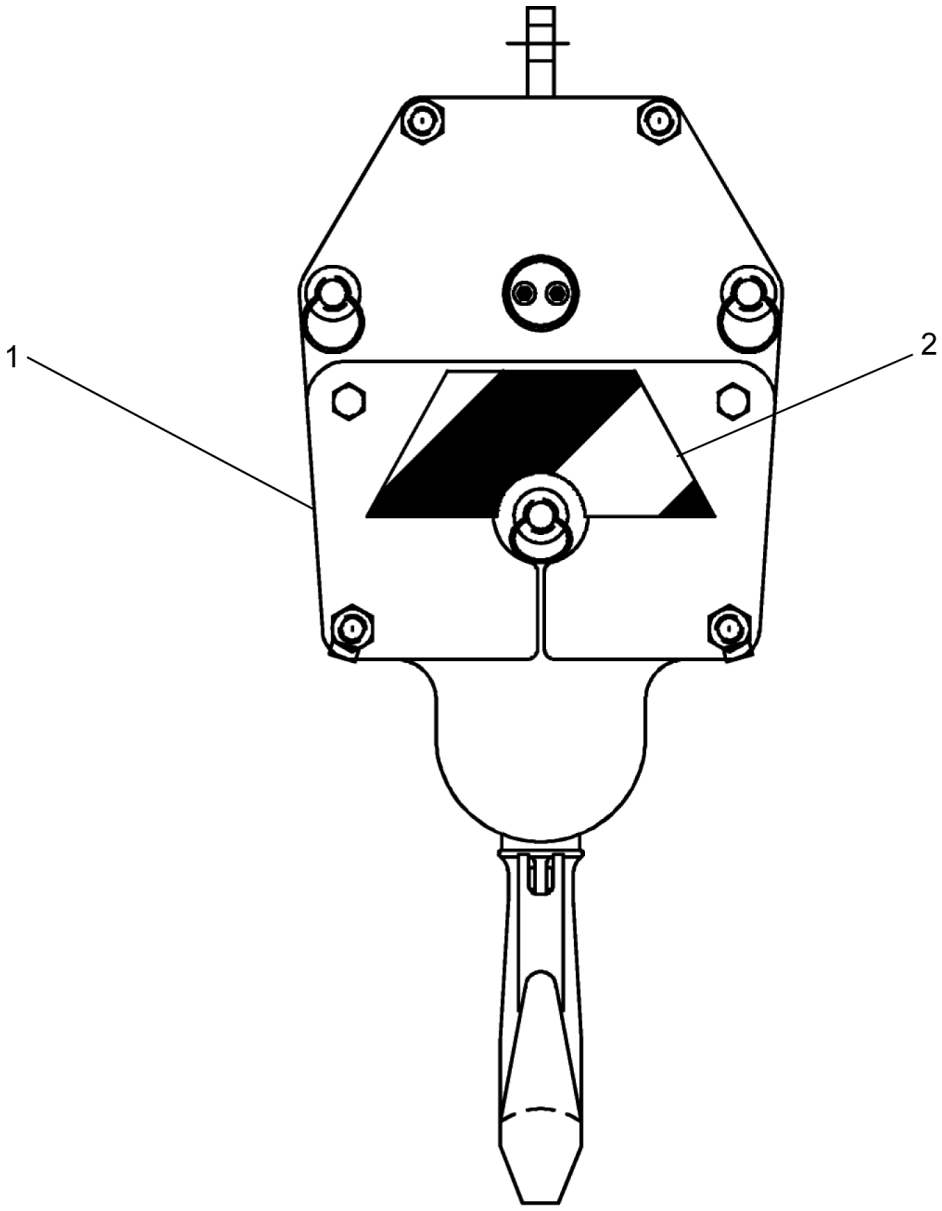

REF	PART NO.	DESCRIPTION	QTY
	T129735 (Rev. A)	*Hook Block, 4 Sheave, 45 Ton*	
1	**T129736**	Hook Block, 4 Sheave, 45 TON, 3/4 IN Wire, 899LBS (see page 143)	1
2	1006865	Decal, Hook Block	2

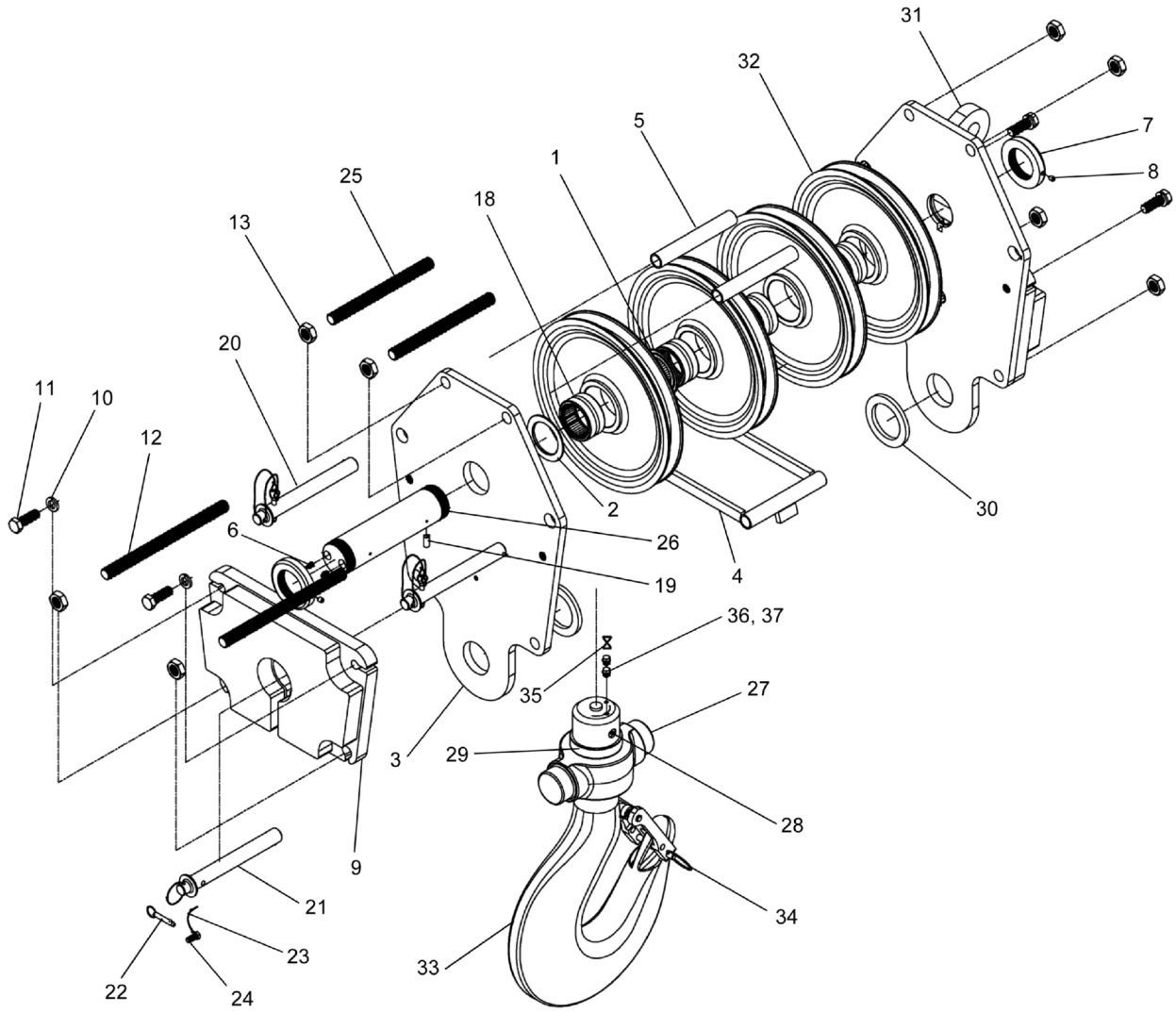

WHEN ORDERING PARTS, SPECIFY MODEL NUMBER, SERIAL NUMBER AND DESCRIPTION OF PARTS REQUIRED

LOAD KING BY CUSTOM TRUCK ONE SOURCE

HOOK BLOCK ASSEMBLY 4 SHEAVE, 45 TONS, 3/4"

DATE: Released 08-2018

MODEL: 480-126

PAGE: 143

CHAPTER

1

REF	PART NO.	DESCRIPTION	QTY
	T129736 (Rev. A)	*Hook Block, 4 Sheave, 45 TON, 3/4 IN Wire, 899LBS*	
1	215914	WSH TH 4.25ODX3.00IDX0.44 TKBR	3
2	215913	WSH TH 4.25ODX3.00IDX0.23 TK	2
3	225333	QRJQ 16PL Group	1
4	225334	QRJ 16R Guide AY	1
5	215336	SPR 1.32ODX1.05IDX8.94LG	2
6	215304	Fitting 1/8NPT	4
7	217125	-8Nut R 3	2
8	215898	Screw Set SC0.38ODX0.50LGNC CN	2
9	225335	QRJ 16CK WT AY 2.88	2
10	215287	L WASH 3/4	4
11	225336	Screw Cap HX0.75ODX2.25LG NC	4
12	225337	T Bolt 1.00ODX14.3LG All THD	2
13	215280	-8Nut J 1	8
14*	217135	QRJ CAUT Plate	1
15*	220256	Name Plate Load King F/Block	1
16*	220253	CAUT Plate Load King	1
17*	216955	Screw DR RD 0.14ODX0.25LGNC CD	14
18	215911	BRG R 3.75ODX3.00IDX1.75WD	4
19	215337	Pin Spirol 0.50ODX1.00LG	1
20	225338	Pin QK Reeve 1.25ODX10.50LGW/Lanyard	2
21	225339	Pin QK Reeve 1.25ODX10.50LGW/Loop	1
22	215290	Pin QK-REL 0.38ODX1.50LG ZNC	1
23	225340	Lanyard CZ 3.00LG Loop/Loop	1
24	215327	Screw Cap HX0.38ODX1.00LG NC	1
25	215333	T Bolt 1.00ODX11.8LG All THD	2
26	225341	Pin Center 3.00ODX12.1LG-4	1
27	215330	J QHSG Casting	1
28	215286	-28Fitting 1/4	1
29	215285	T251W RT BRG	1
30	215306	SPR 4.75ODX3.31IDX0.38WD	2
31	225342	J D End 11/4	1
32	225343	SHV WC 16.0ODX3.74 IDX0.75TK	4
33	217900	J 55HK&Nut AY Short	1
34	217903	55- 70J Latch Kit STL	1
35	217119	1/32 STN Safety Wire	2’
36	217899	L Wash 3/8	2
37	217898	Screw Cap HX0.38ODX0.50LG NC	2

* ITEM NOT SHOWN IN ILLUSTRATION

WHEN ORDERING PARTS, SPECIFY MODEL NUMBER, SERIAL NUMBER AND DESCRIPTION OF PARTS REQUIRED

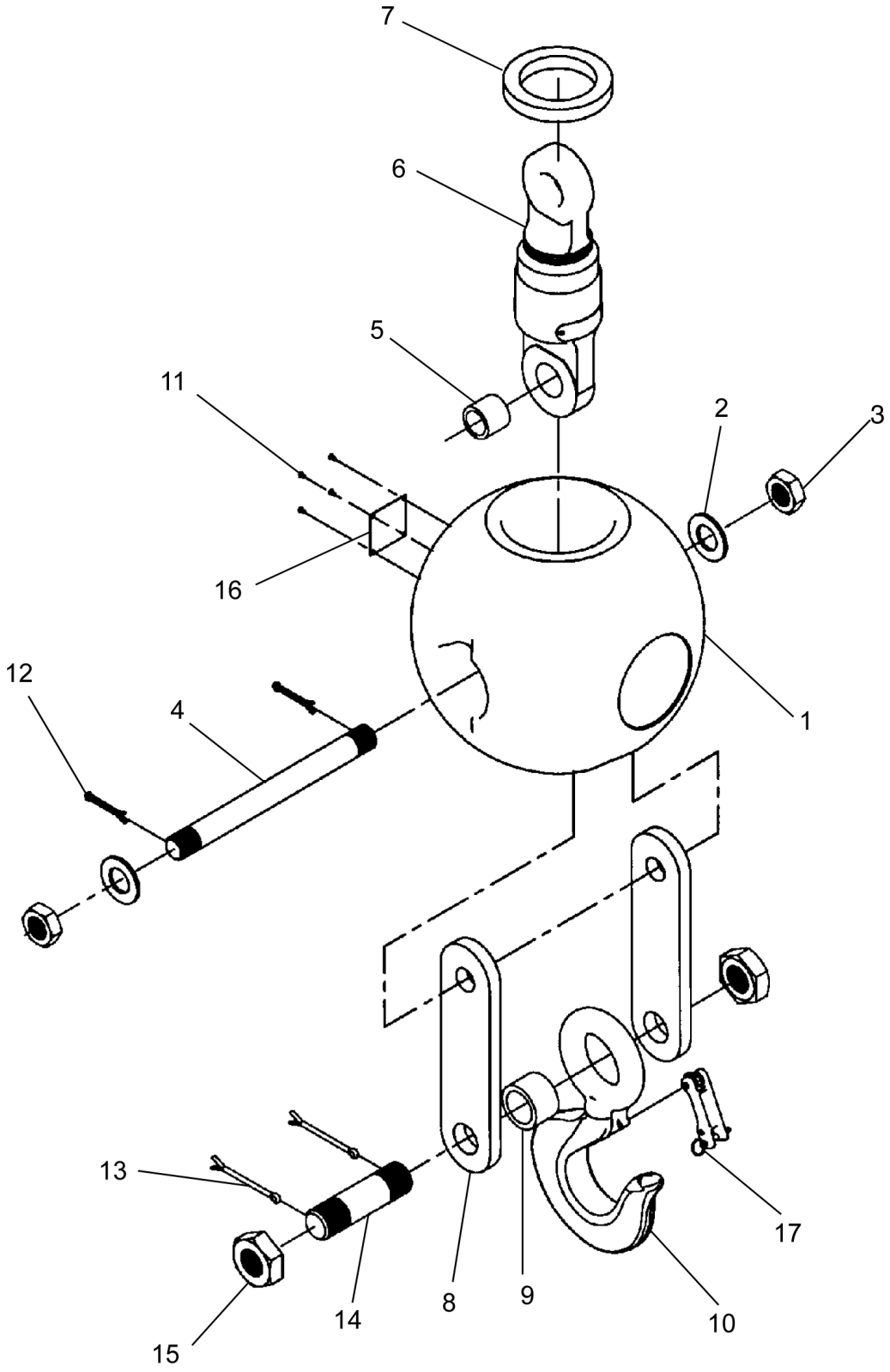

WHEN ORDERING PARTS, SPECIFY MODEL NUMBER, SERIAL NUMBER AND DESCRIPTION OF PARTS REQUIRED

LOAD KING BY CUSTOM TRUCK ONE SOURCE

OVERHAUL BALL #419 / 12 TONS / 3/4”

DATE: Released 08-2018

MODEL: 480-126

PAGE: 145

CHAPTER 1

REF	PART NO.	DESCRIPTION	QTY
	410-4069 (Rev. 00)	*Overhaul Ball, 12 Ton, 419#, 3/4"*	
1	217138	OHB350 Ball	1
2	215386	Washer 11/4	2
3	215387	-7 Nut J 11/4	2
4	217139	OHB 13L Pin 11/4	1
5	215403	SPR 1.75ODX1.31IDX1.50LG	1
6	225247	12EE	1
7	217140	12EH350C Ring	1
8	215397	OHB ADP B 3/4	2
9	217141	SPR 2.38ODX1.75IDX1.56LG	1
10	215402	15Eye HK A15	1
11	216955	Screw DR RD 0.14ODX0.25LGNC CD	4
12	215388	1Cotter 3/16	2
13	215398	2Cotter 1/4	2
14	215399	OHB 6L Pin 15/8	1
15	215400	-51/2Nut J 15/8	2
16	217142	OHB Name Plate Load King	1
17	217143*	A15J Latch Kit Installed	1

* WHEN ORDERING REPLACEMENT LATCH KIT ORDER P/N: 215401

WHEN ORDERING PARTS, SPECIFY MODEL NUMBER, SERIAL NUMBER AND DESCRIPTION OF PARTS REQUIRED

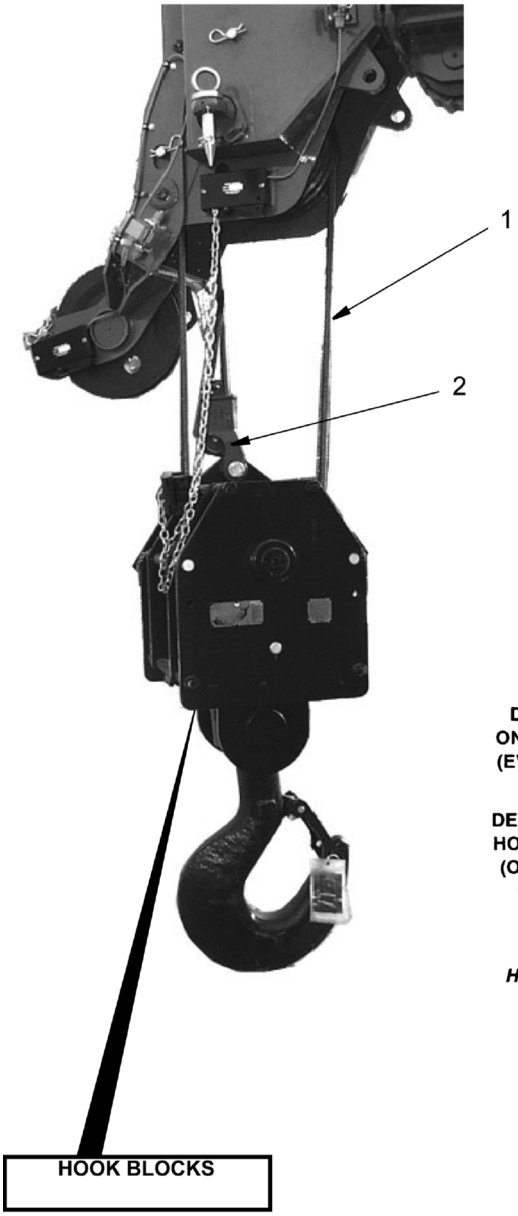

CAUTION

UNDER NO CONDITION CAN ANY OTHER SIZE, TYPE, OR LENGTH OF WIRE ROPE BE USED ON THIS EQUIPMENT SINCE IT CONSTITUTES A SAFETY HAZARD.

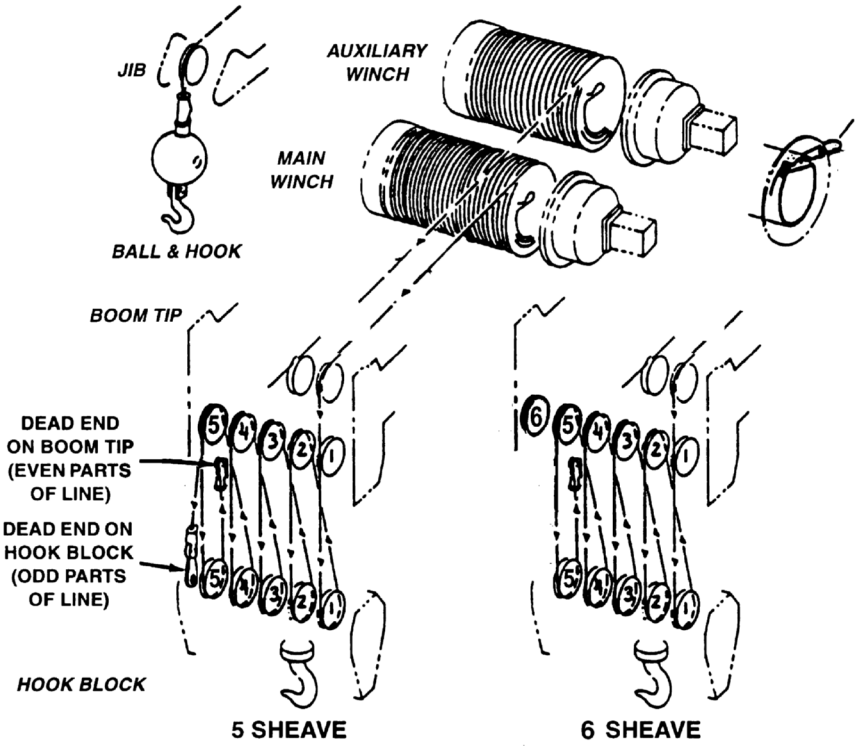

- WIRE ROPE -

6X19CLASS, I.P.S., I.W.R.C. REGULAR LAY PREFORMED

3/4" - 25.6 Tons Minimum Breaking Strength

- WIRE ROPE -

OPTIONAL

BRIDON - DYFORM 34LR 1960 ROTATION RESISTANT COMPACTED STRAND

3/4" - 34.51 Tons Minimum Breaking Strength

REF	PART NO.	DESCRIPTION	QTY
	718A0519 (Rev. 00)	*Rotation-Resistant Cable 3/4 X 600'*	
1	12517-600	Rope, Wire	1
2	1234-44	Wedge & Socket Assembly, 3/4"	1

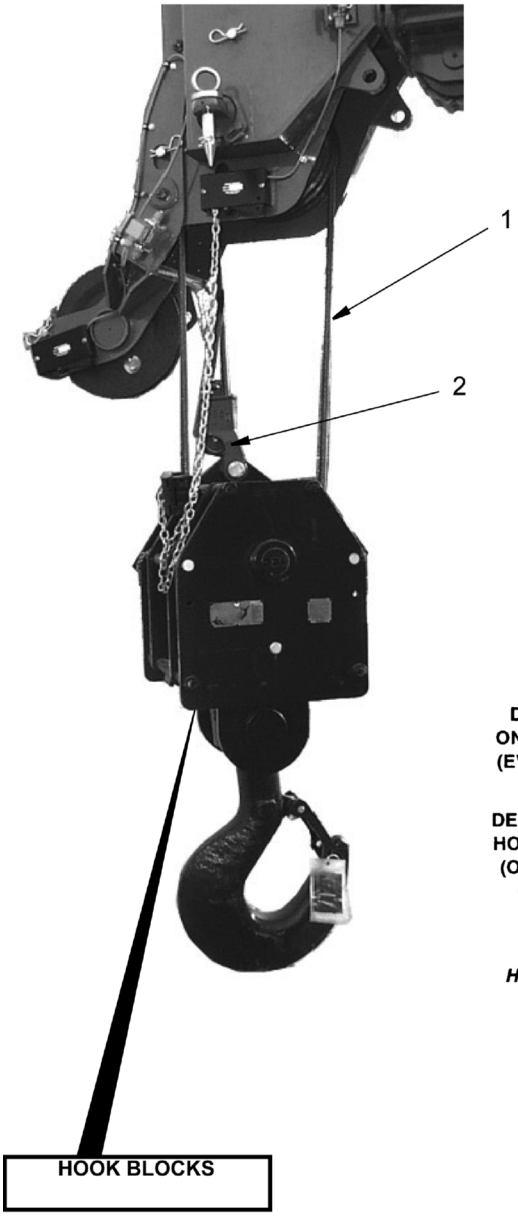

CAUTION

UNDER NO CONDITION CAN ANY OTHER SIZE, TYPE, OR LENGTH OF WIRE ROPE BE USED ON THIS EQUIPMENT SINCE IT CONSTITUTES A SAFETY HAZARD.

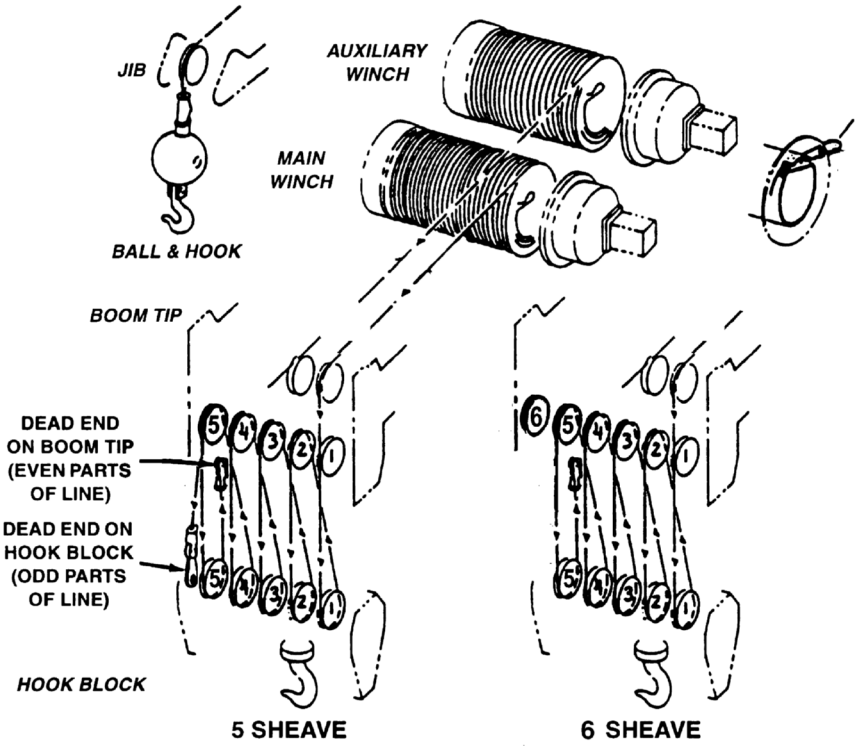

- WIRE ROPE -

6X19CLASS, I.P.S., I.W.R.C. REGULAR LAY PREFORMED

3/4" - 25.6 Tons Minimum Breaking Strength

- WIRE ROPE -

OPTIONAL

BRIDON - DYFORM 34LR 1960 ROTATION RESISTANT COMPACTED STRAND

3/4" - 34.51 Tons Minimum Breaking Strength

REF	PART NO.	DESCRIPTION	QTY
	718A0518 (Rev. 00)	*Regular Lay Cable, 3/4 x 600'*	
1	12518-600	Rope, Wire	1
2	1234-44	Wedge & Socket Assembly, 3/4"	1

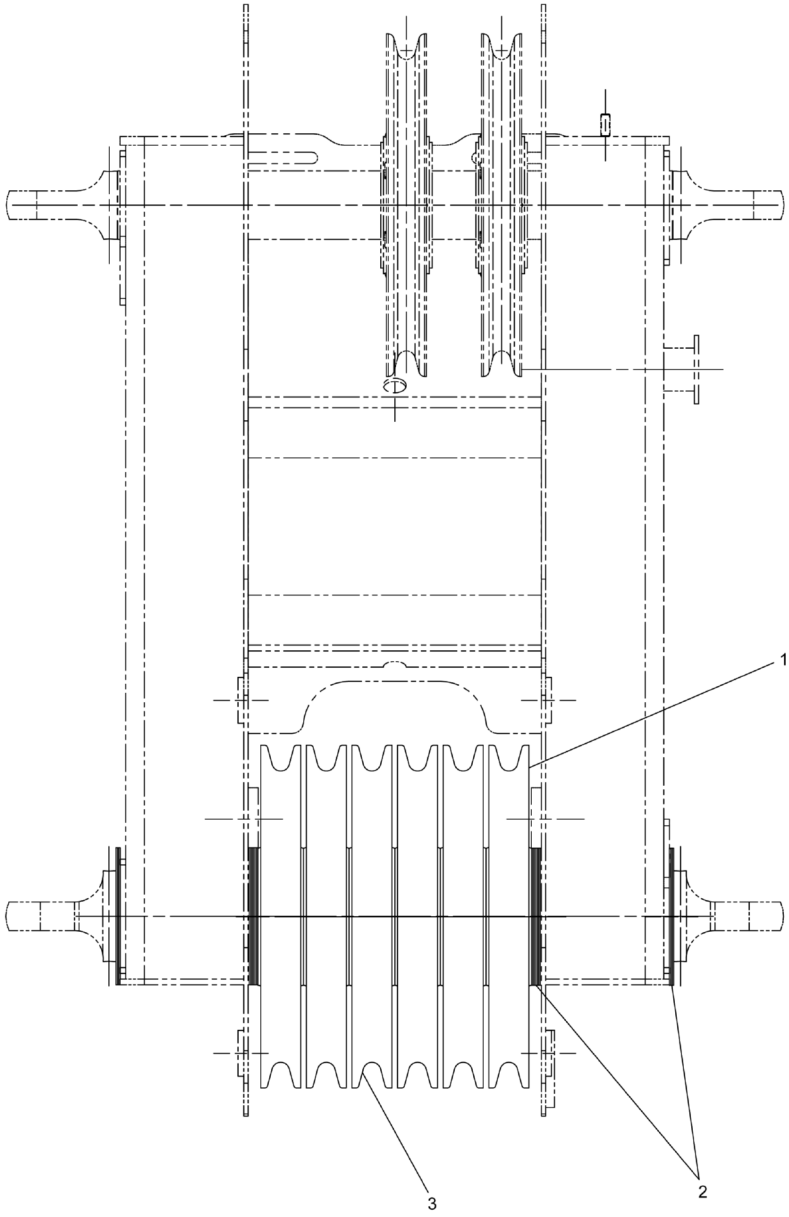

REF	PART NO.	DESCRIPTION	QTY
	721A0242-2 (Rev. A)	*6 Sheave Assembly, Nylon*	
1	1213-6	Grease Zerk	6
2	718-0197	Spacer	20
3	718A1013	Sheave ASSY 3/4 Wire Rope	6

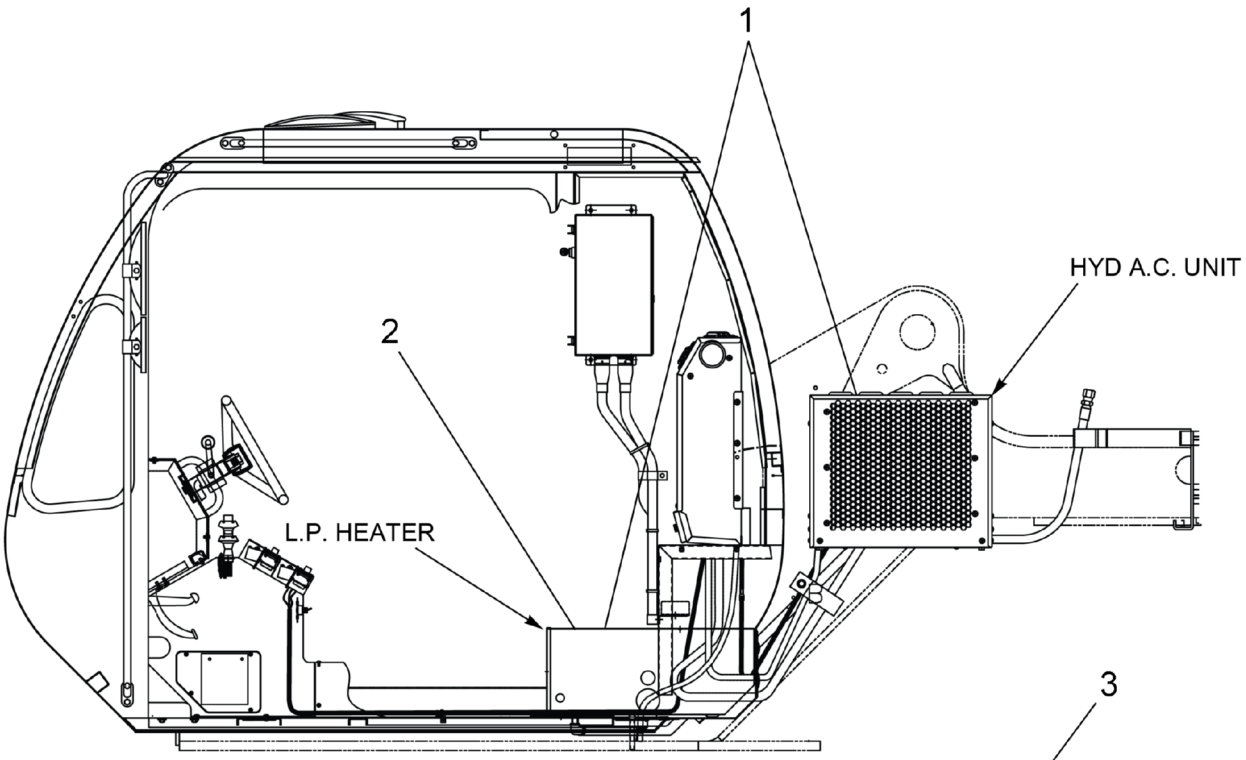
1
HYD A.C. UNIT
2
L.P. HEATER

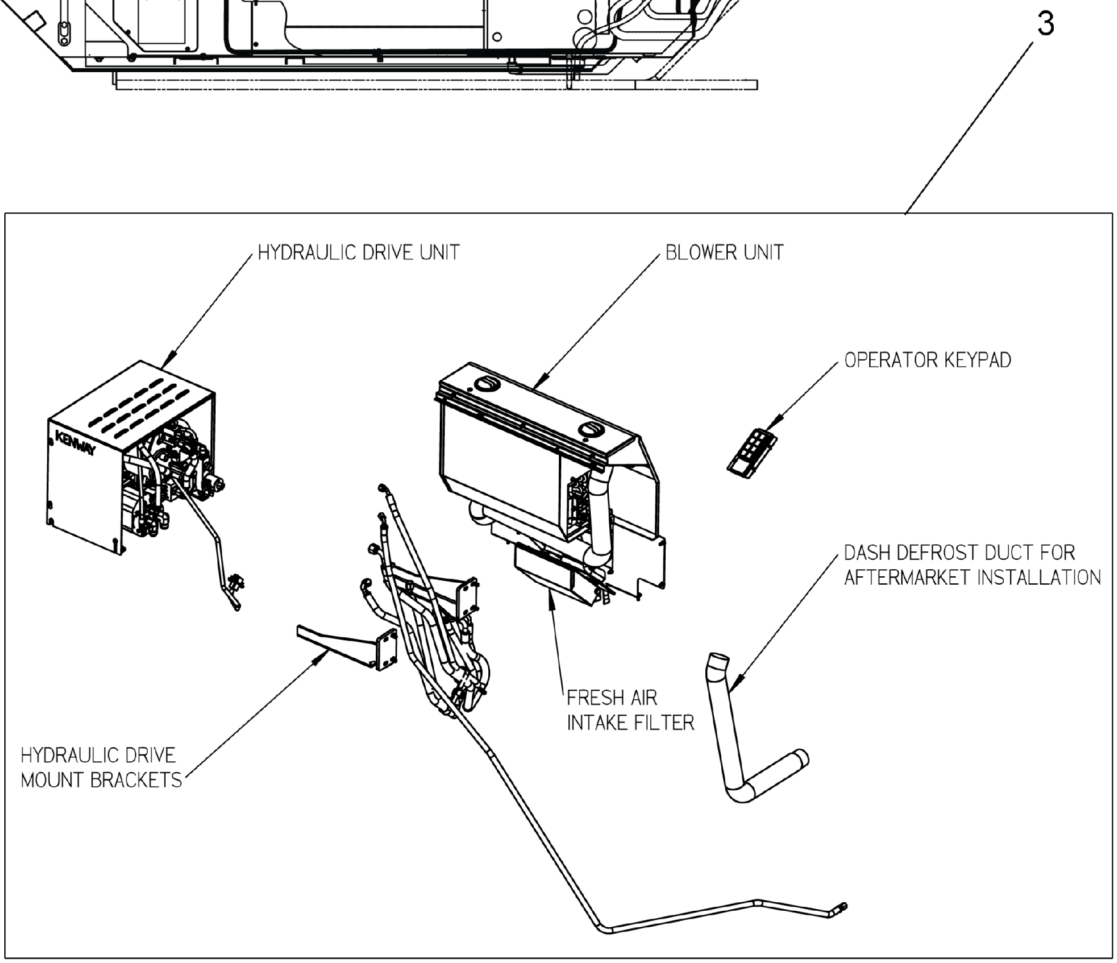
3
HYDRAULIC DRIVE UNIT
BLOWER UNIT
OPERATOR KEYPAD
DASH DEFROST DUCT FOR
AFTERMARKET INSTALLATION
FRESH AIR
INTAKE FILTER
HYDRAULIC DRIVE
MOUNT BRACKETS

REF	PART NO.	DESCRIPTION	QTY
	480-126-2017-HEATER & AC* (Rev. 00)	*Upper Cab Climate Control Options*	
1	**718A1008**	Hydraulic A/C & L.P Heater (see page 154)	1
2	**719A0113**	Heater Assembly, Suburban (see page 157)	1
3	**T110026**	Deluxe A/C & Flameless Heat (see page 174)	1
4**	**709A7628**	No Heater - Includes Cover (see page 199)	1

* NOT PURCHASABLE AT THIS LEVEL
** ITEM NOT SHOWN IN ILLUSTRATION

WHEN ORDERING PARTS, SPECIFY MODEL NUMBER, SERIAL NUMBER AND DESCRIPTION OF PARTS REQUIRED

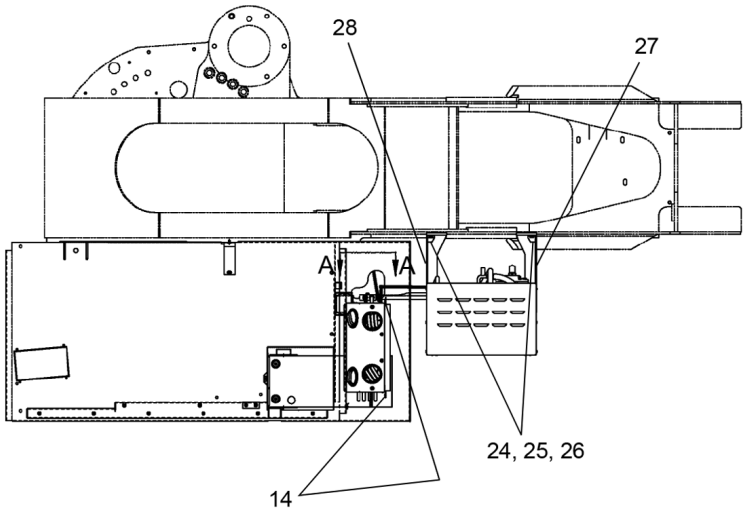

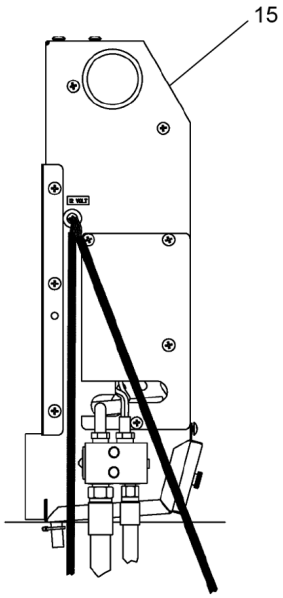

VIEW A - A

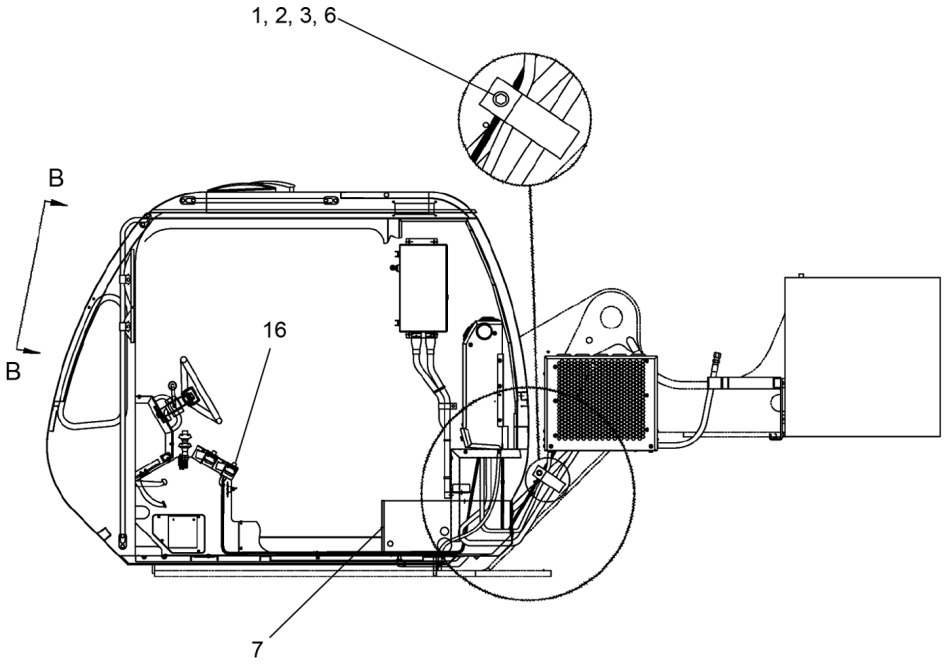

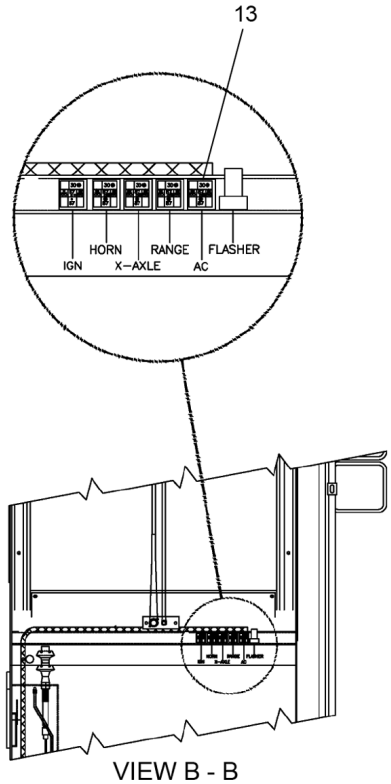

VIEW B - B

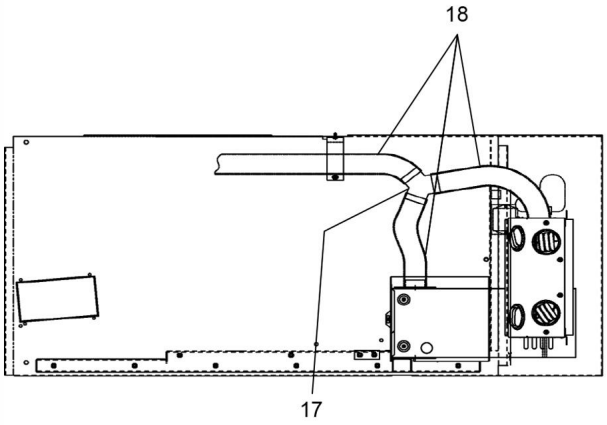

DETAIL OF FLEX HOSE PLUMBING

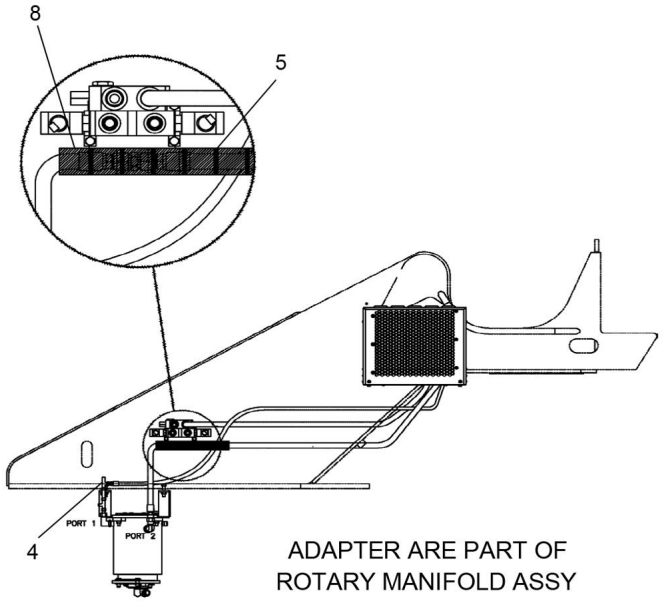

ADAPTER ARE PART OF
ROTARY MANIFOLD ASSY

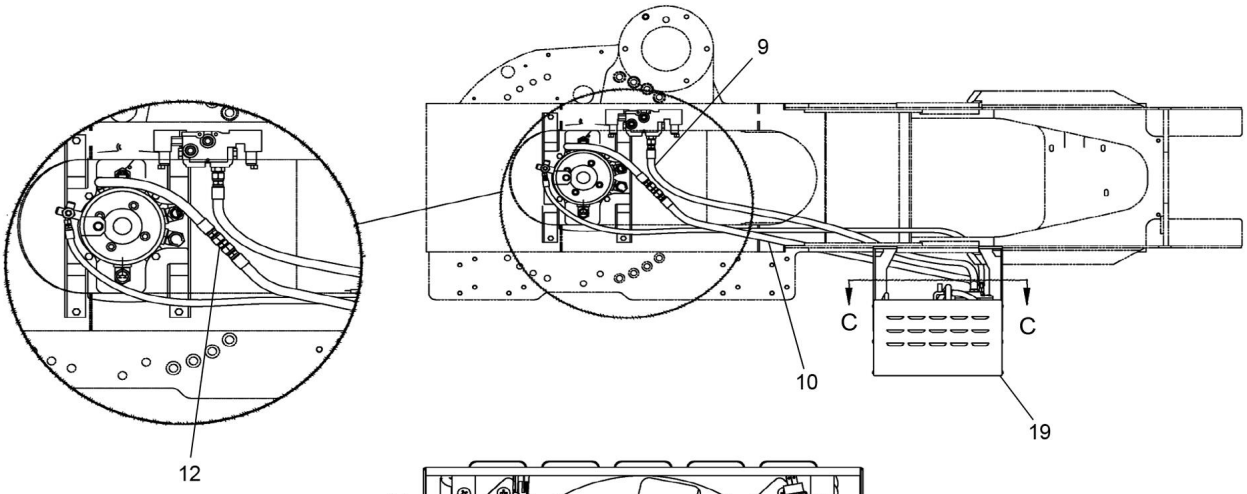

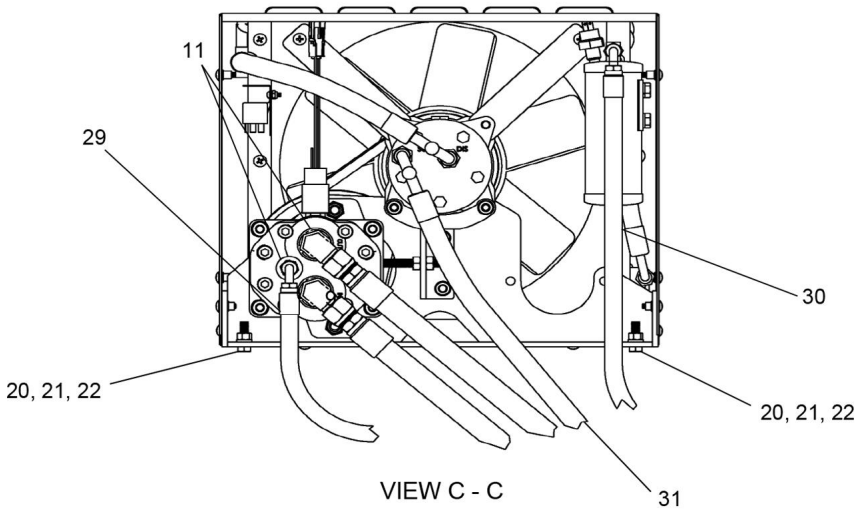

VIEW C - C

WHEN ORDERING PARTS, SPECIFY MODEL NUMBER, SERIAL NUMBER AND DESCRIPTION OF PARTS REQUIRED

REF	PART NO.	DESCRIPTION	QTY
	718A1008 (Rev. C)	*Hydraulic A/C & L.P Heater*	
1	SHF-375CA00-25	HHCS 3/8 NC X 1 GR5 Zinc	1
2	WAN-31NX000-20	WSH, FL TYPA-NRW 0.3125, ST SQC	1
3	W07-375X000-20	Washer Lock 3/8 MED	1
4	12019-112	Tee, -6	1
5	1222-202	Plastic Tie	6
6	1240-29	Clamp P, 1.125 DIA	1
7	**719A0113**	Heater Assembly, Suburban (see page 157)	1
8	12508-24	Sleeve	1
9	707 4108-76	Hose, -12	1
10	721 0253-60	Hose, -12	1
11	1219-802	Elbow, 90, MJIC-12/MORB-12	2
12	1219-820	Adapter, MJIC-24/MORB-24	1
13	441 6828	Relay 20/30 AMP	1
14	SHF-250C750-25	SCR, HHCS FT 0.25-20 X 0.75, ST Z G5	2
15	**710-0652**	Blower Unit, Cab (see page 161)	1
16	718A1008-Bag ASSY	Bag ASSY, Switch Plate	1
17	718A1008-Adapter	Adapter, “Y” Flex Hose 2.5”	1
18	718A1008-Flex Tube	Flex Tube 2.5” OD X 18”	1
19	**710-0653**	HYD. A/C Unit (see page 166)	1
20	718A1008-HHCS	HHCS 3/8 X 1-1/4 GR8	4
21	718A1008-Washer	Washer, Lock 3/8” ID	4
22	718A1008-Nut	Nut, HEX 3/8-16 NC	4
23*	**710A0654**	Hoses & Mounting Kit (see page 168)	1
24	718A1008-Washer	Washer, Lock 3/8” ID	4
25	718A1008-WSH, F	Washer, Flat 3/8”/M10	4
26	718A1008-HHCS	HHCS 3/8 X 1-1/4 GR8	4
27	718A1008-Bracket, L	Bracket, Left Mounting	1
28	718A1008-Bracket, R	Bracket, Right Mounting	1
29	718A1008-Hose, Drain	Hose, Case Drain -6	1
30	718A1008-Hose, 6	Hose, Refrigerant -6	1
31	718A1008-Hose, 10	Hose, Refrigerant -10	1
32*	T135323	R134a Refrigerant	2.4

* ITEM NOT SHOWN IN ILLUSTRATION

WHEN ORDERING PARTS, SPECIFY MODEL NUMBER, SERIAL NUMBER AND DESCRIPTION OF PARTS REQUIRED

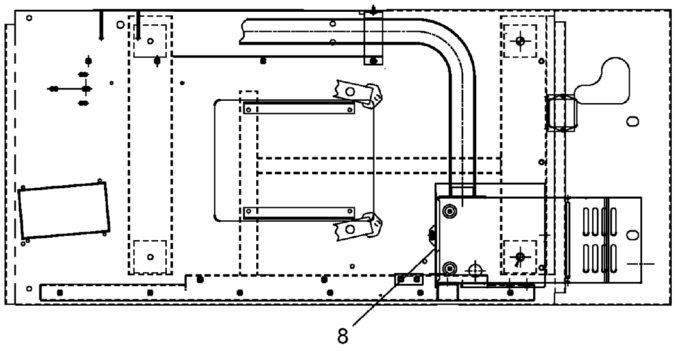

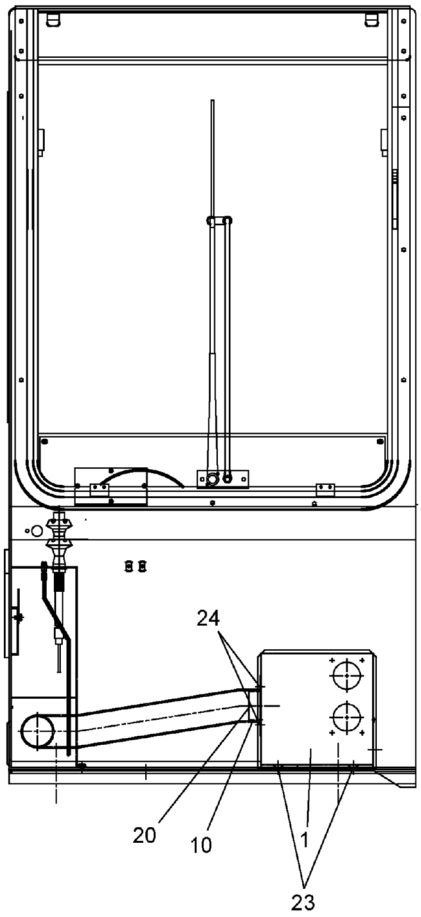

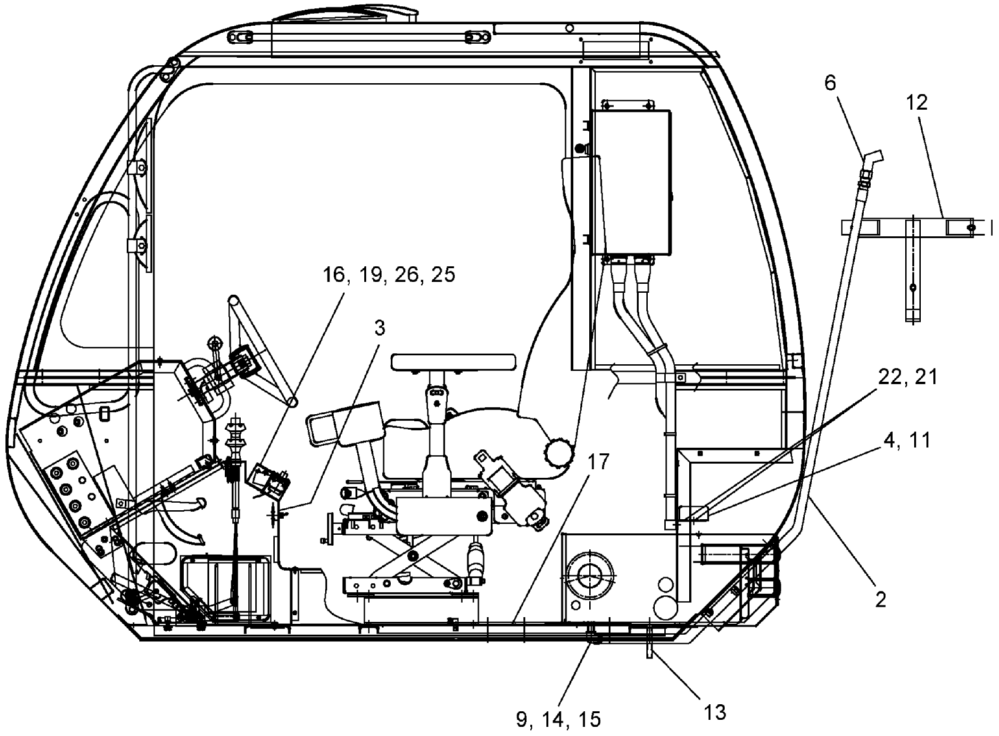

WHEN ORDERING PARTS, SPECIFY MODEL NUMBER, SERIAL NUMBER AND DESCRIPTION OF PARTS REQUIRED

LOAD KING BY CUSTOM TRUCK ONE SOURCE

HEATER ASSEMBLY, SUBURBAN

DATE: Released 08-2018

MODEL: 480-126

PAGE: 157

CHAPTER 1

REF	PART NO.	DESCRIPTION	QTY
	719A0113 (Rev. L)	*Heater Assembly, Suburban*	
1	719-0223	Suburban Propane Heater	1
2	719A0930	Hose ASS'Y & FTG	1
3	12400-1048	Heater Decal	1
4	1223-1076	Slope Alert Tilt Sensor	1
5*	719-0227	L.P. Regulator	1
6	12019-66	Elbow, 45, MNPT-6/MSAE45-6	1
7*	1221-147	Silicone Sealant	1
8	719-0471	Heater Cover	1
9	12019-62	3/8 Pipe to -6 JIC	1
10	719F0482	Adapter Flange	1
11	719-0476	Slope Alert Mounting Panel	1
12	**719A0440**	L.P Bracket Kit (see page 159)	1
13	1233-75	1/2-13 X 3 1/2 LG. Carriage Bolt	1
14	1219-641	3/8 X 90° Pipe Elbow	1
15	1219-199	3/8 X 2 1/2 Pipe Nipple	1
16	200B2007-3	Clamp - Medium Duty	1
17	220-7007-5	1/4-20 X 0.75 LG. FLG/HD	2
18*	441-6828	Relay	1
19	1233-78	#6-32 X 3.00 LG. R.H.M.S.	2
20	1240-291	Clamp	2
21	1230-6	KIPS, #10-24	4
22	1233-69	Screw Machine	4
23	1200-416	Bolt, 1/4-20 x 3/4	2
24	1236-6	#8 X 3/4" Sheet Metal Screw	5
25	**719A0225**	Thermostat Assembly (see page 160)	1
26	709 0479	Kenway Remote Spacer Box	1

* ITEM NOT SHOWN IN ILLUSTRATION

WHEN ORDERING PARTS, SPECIFY MODEL NUMBER, SERIAL NUMBER AND DESCRIPTION OF PARTS REQUIRED

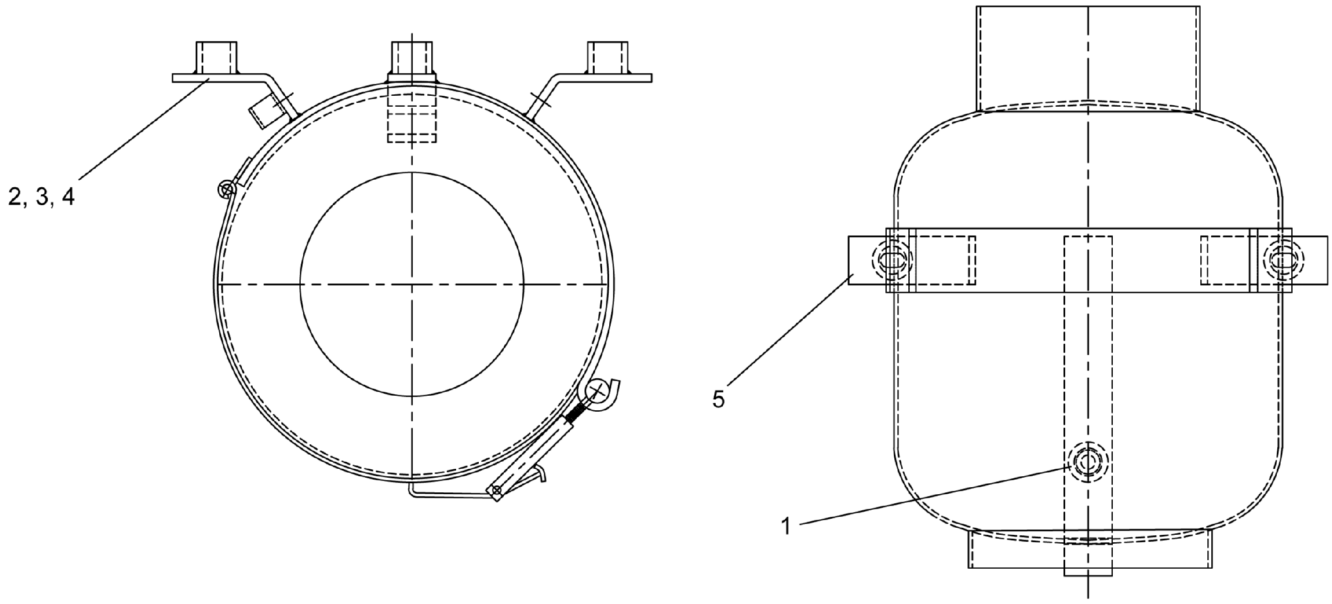

REF	PART NO.	DESCRIPTION	QTY
	719A0440 (Rev. M)	*L.P Bracket Kit*	
1	S16-375CA75-20	SCR, FHSHCS 0.375-16 X 1.75, ST SQC	1
2	S01-375CB00-25	SCR, HHCS 0.375-16 X 2.00, ST Z GR5	2
3	WAR-375X000-22	WSH, FL TYPA-REG 0.375, ST SQC G2	2
4	W07-375X000-20	Washer Lock 3/8 MED	2
5	719F0498	Bracket L.P.	1

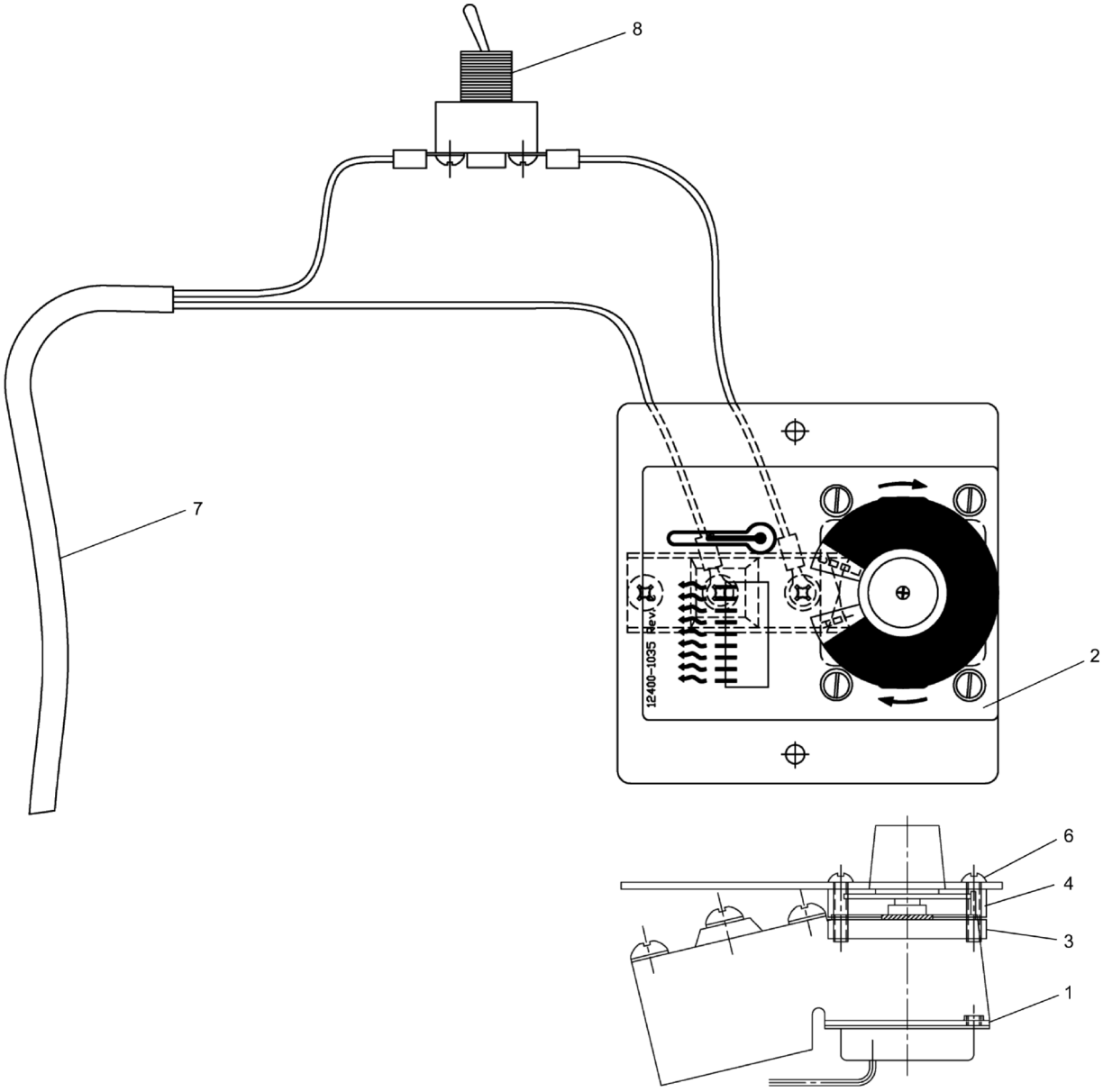

REF	PART NO.	DESCRIPTION	QTY
	719A0225 (Rev. F)	*Thermostat Assembly*	
1	719 0817	Thermostat	1
2	12400-1035	Decal	1
3	719 0611	Keeper	2
4	719 0612	Spacer Bar	2
5*	719 0470	Thermostat MTG. Cover	1
6	1233-76	#6-32 X .75 LG RD HD MACH SCR	4
7	719 0913	Heater Harness	1
8	1223-1025	SPST Toggle Switch	1

* ITEM NOT SHOWN IN ILLUSTRATION

WHEN ORDERING PARTS, SPECIFY MODEL NUMBER, SERIAL NUMBER AND DESCRIPTION OF PARTS REQUIRED

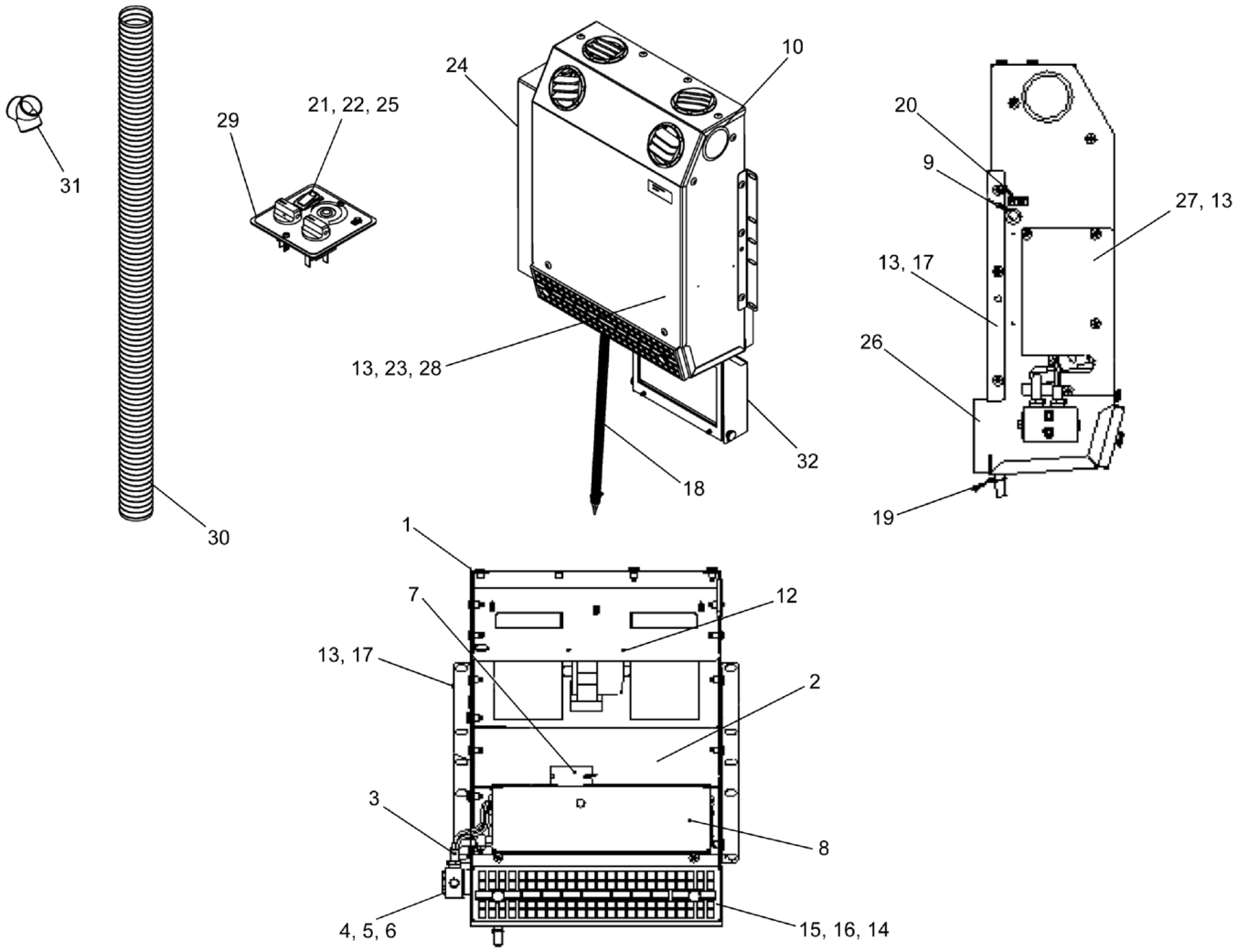

WHEN ORDERING PARTS, SPECIFY MODEL NUMBER, SERIAL NUMBER AND DESCRIPTION OF PARTS REQUIRED

REF	PART NO.	DESCRIPTION	QTY
	710-0652 (Rev. 00)	*Blower Unit, Cab*	
1	227721	Weldment, HSG	1
2	227722	Foam, Coil Rear 1/8"	1
3	**223813**	ASSY, EVAP Coil (see page 163)	1
4	221817	Washer, Lock 1/4 YZ	2
5	221831	HHCS 1/4-20 NC X 2 ZP	2
6	223812	Spacer Plastic EXP Valve	1
7	219733	Thermostat, Fixed	1
8	228251	Cover, Coil VW7 AC Only	1
9	223817	Grommet, Hole .75	1
10	227724	Plug Hole 2 1/2 Dia Plastic	2
11*	220241	Wire Harness	1
12	227725	ASSY, Blower	1
13	221862	Screw, PTH 1/4-20 X 3/4 Black Zinc	1
14	228252	Filter, RECIRC	1
15	223822	Bracket, Filter	1
16	219738	Knob, 1/4-20X1"	2
17	227726	Bracket, Angle Side MNT	2
18	221871	Drain Tube, 1/2 ID CORR. X 32"	1
19	221873	Tie, Plastic 4"	1
20	223827	Decal, 12 Volt	1
21	215844	Switch, Fan	1
22	219730	3 position Mode Switch W/ Off	1
23	227728	ASSY, Cover	1
24	227729	Shield, Side	1
25	220246	Switch, Rocker Lighted	1
26	223828	Gasket, MD VW7 Air Intake	1
27	228253	Plate, Cover VW7 Air Only	1
28	221841	Label, KW Serial#	1
29	228254	Bag ASSY, Switch Plate	1
30	221854	Hose, Duct 2.5" X 3.0 FT	1
31	227730	Adapter, "Y" Flex Hose 2.5"	1
32	**219836**	Outside Air Kit (see page 164)	1

* ITEM NOT SHOWN IN ILLUSTRATION

WHEN ORDERING PARTS, SPECIFY MODEL NUMBER, SERIAL NUMBER AND DESCRIPTION OF PARTS REQUIRED

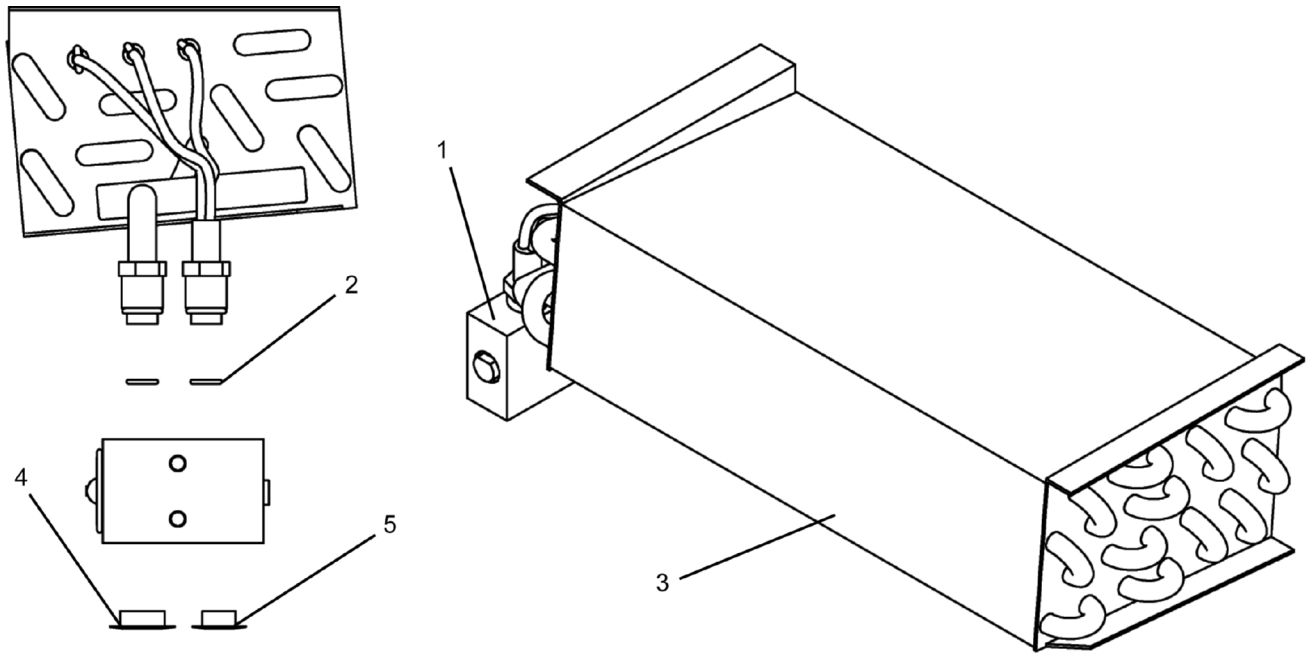

REF	PART NO.	DESCRIPTION	QTY
	223813 (Rev. 00)	*ASSY, EVAP Coil*	
1	223829	Valve, EXP. Block	1
2	215839	O-RING, #8 R-12/R134A	2
3	215834	Coil, Evaporator	1
4	223830	Cap, Plastic #10 FIOR	1
5	223831	Cap, Plastic #6 FIOR	1

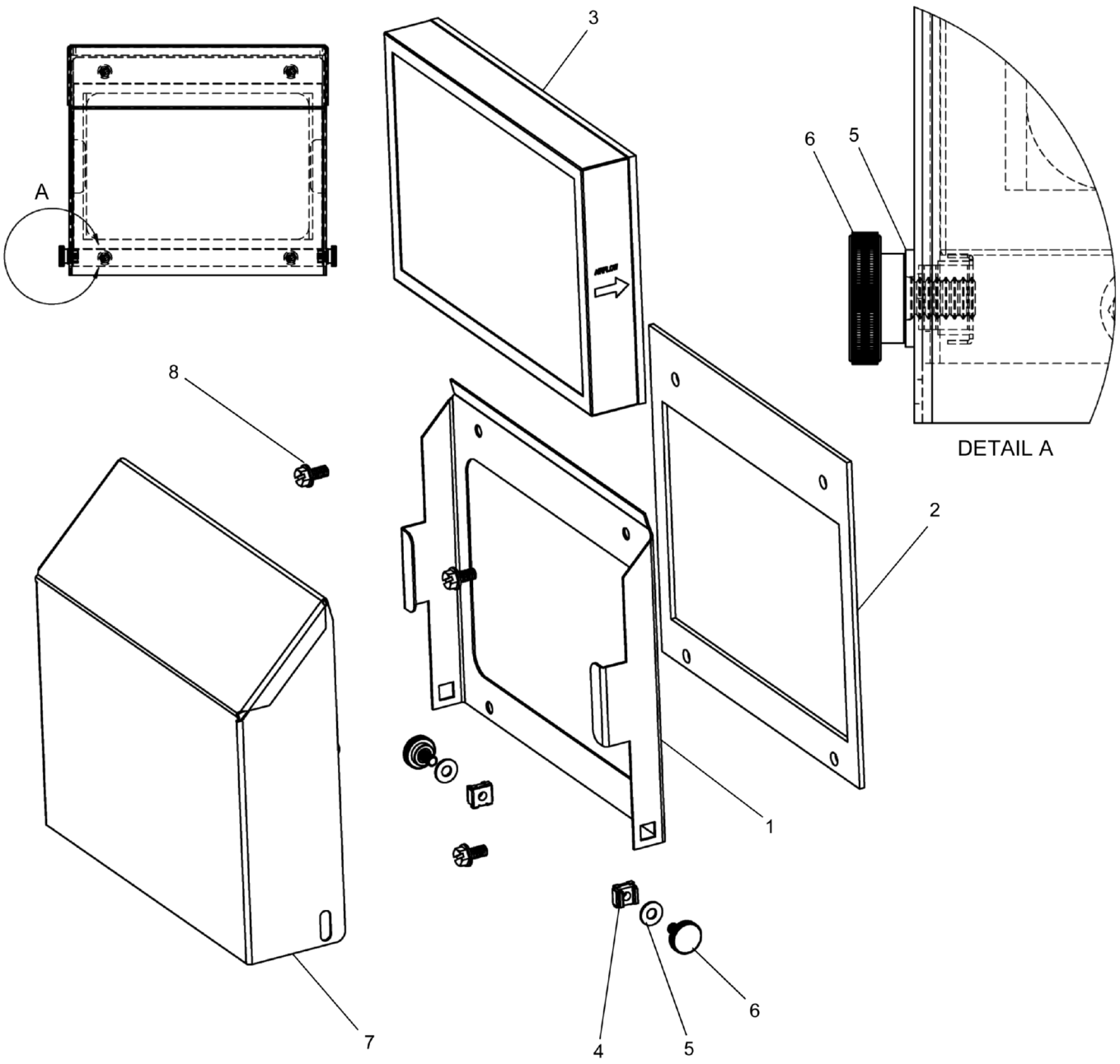

WHEN ORDERING PARTS, SPECIFY MODEL NUMBER, SERIAL NUMBER AND DESCRIPTION OF PARTS REQUIRED

LOAD KING BY CUSTOM TRUCK ONE SOURCE

OUTSIDE AIR KIT (CARRIER CAB)

DATE: Released 08-2018

MODEL: 480-126

PAGE: 164

CHAPTER 1

REF	PART NO.	DESCRIPTION	QTY
	219836 (Rev. 00)	*Outside Air Kit*	
1	219832	Base, Filter	1
2	223835	Gasket	1
3	223836	Filter, Paper 1.25" X 6.2" X 9.33" W/Reversed Air Flow	1
4	217215	Nut, Retainer 1/4-20 NC	2
5	219834	Washer, Flat 3/16"	2
6	217214	Thumb Screw 1/4 NC X 1/2"	2
7	219833	Cover Filter	1
8	221894	HWH Slotted 1/4-20 X .5" - Self Tapping	4

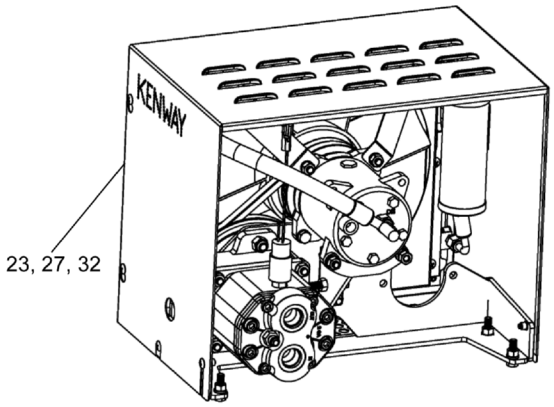
KENWAY
23, 27, 32

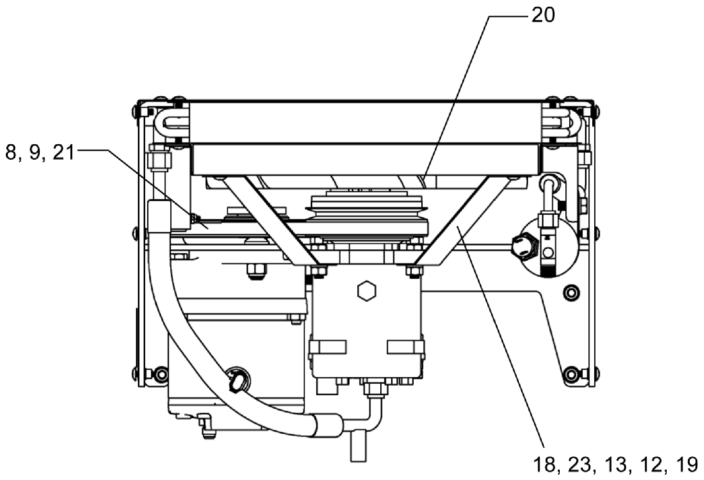
20
8, 9, 21
18, 23, 13, 12, 19

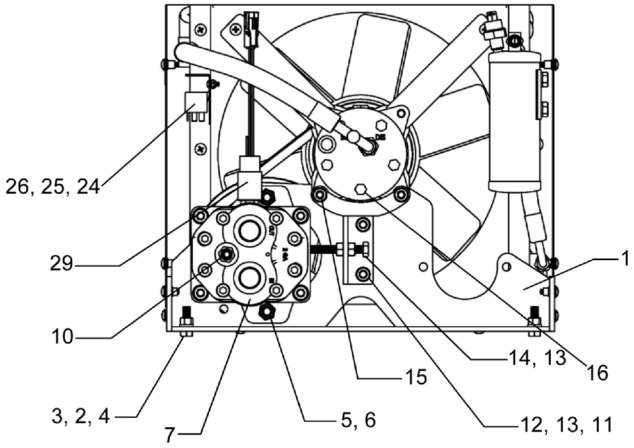
26, 25, 24
29
10
3, 2, 4
7
5, 6
15
14, 13
16
12, 13, 11
1

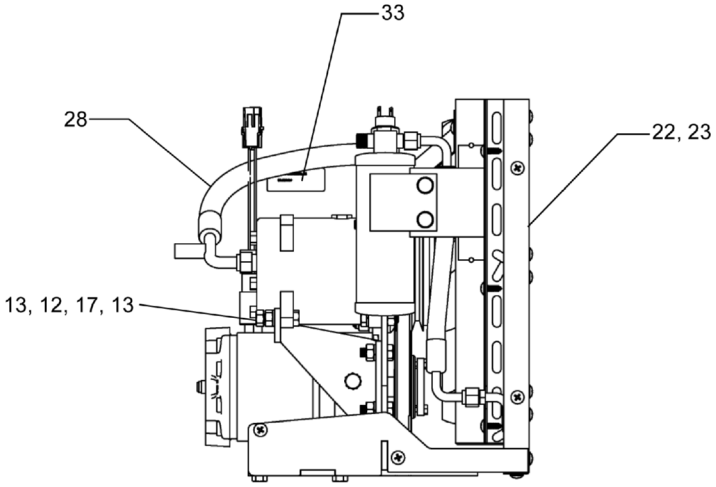
33
28
22, 23
13, 12, 17, 13

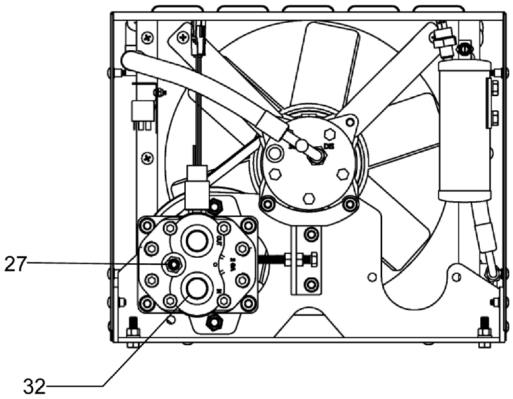
27
32

REF	PART NO.	DESCRIPTION	QTY
	710-0653 (Rev. 00)	*HYD. A/C Unit*	
1	223056	Base, HYD	1
2	221798	Nut, HEX 3/8-16NC YZ	4
3	223849	Washer, Lock 3/8" ID	4
4	221800	HHCS 3/8 NC X 1-1/4 GR8 ZP	4
5	221810	Nut HEX 1/2-13 NC NYLOCK ZP GR	2
6	221809	Carriage Bolt, 1/2 NC X 1.5 ZP	2
7	223057	Motor, HYD Gear 7/8" Straight Shaft, B-Mount	1
8	223058	Pulley, 1-AG 7.75 OD Tapered Hub	1
9	221812	Bushing, 7/8" ID Split W/ 1/4 KEYWAY	1
10	223059	Adapter, #6MB - #6MJ	1
11	223060	BRKT, COMP MTG	1
12	221819	Washer, Lock M10 ZP	8
13	221820	Nut, HEX M10-1.5 YZ	8
14	223061	HHCS M10-1.5 X 70 Full Thread ZP	1
15	219935	HHCS M10-1.5 x 35mm GR 10.9 YZ (16mm-Head)	3
16	217194	COMP, SD5H14 12 N 4 4L 4L H O 5.25"	1
17	221823	HHCS M10 - 1.5 X 40mm GR10.9 YZ (16mm-Head)	1
18	223062	Brace	2
19	219941	HHCS M10X1.5 X 30mm YZ	2
20	223063	Washer, Flat 1/2	3
21	223064	Belt, 1/2 X 3.40"	1
22	223065	COND, ASSY (Stainless)	1
23	221862	Screw, PTH 1/4-20 X 3/4 Black Zinc	14
24	219802	Relay, 12 Volt (5 Terminal)	1
25	223066	Screw, Button HD 10-24 3/8" BLK ZP	1
26	223067	Nut, #10-24 NYLOCK ZP	1
27	223068	Shield Bottom	1
28	219789	Hose ASSY, #8 - COND-COMPR	1
29	220243	Switch, Pressure 625 NO	1
30*	221873	Tie, Plastic 4"	1
31*	223069	Wire Harness, 17-9057 AF ('08)	1
32	223070	Cover, 17-9057	1
33	221841	Label, KW Serial#	1

* ITEM NOT SHOWN IN ILLUSTRATION

WHEN ORDERING PARTS, SPECIFY MODEL NUMBER, SERIAL NUMBER AND DESCRIPTION OF PARTS REQUIRED

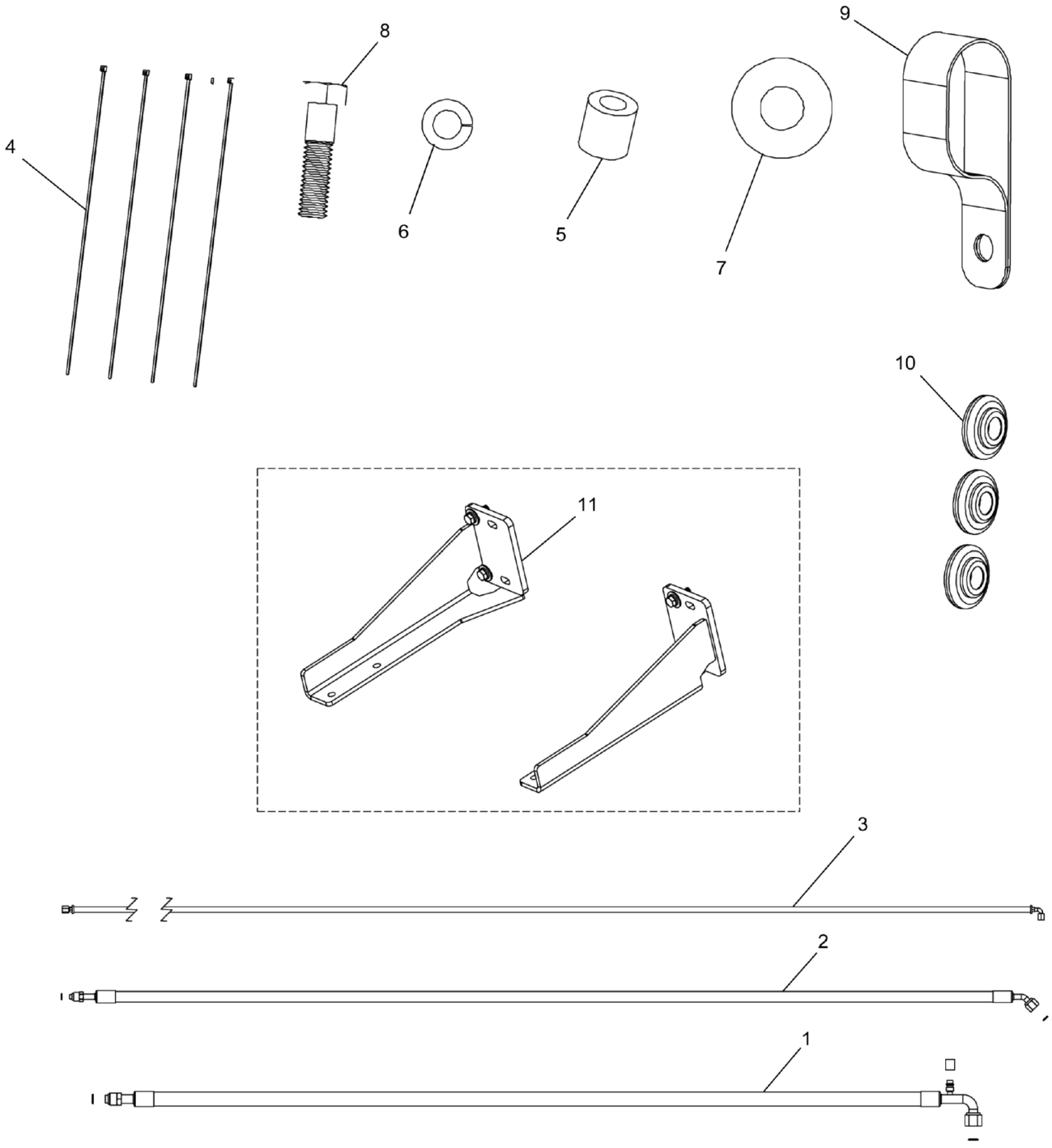

WHEN ORDERING PARTS, SPECIFY MODEL NUMBER, SERIAL NUMBER AND DESCRIPTION OF PARTS REQUIRED

LOAD KING BY CUSTOM TRUCK ONE SOURCE

HOSES & MOUNTING KIT
KENWAY

DATE: Released 08-2018

MODEL: 480-126

PAGE: 168

CHAPTER

1

REF	PART NO.	DESCRIPTION	QTY
	710A0654 (Rev. 00)	*Hoses & Mounting Kit*	
1	**219830**	Hose ASSY. Evaporator to Compressor (see page 170)	1
2	**219829**	Hose Assembly Drier to Evaporator (see page 171)	1
3	**219831**	Hose ASSY, -6HYD Case Drain (see page 172)	1
4	216050	Tie Plastic 15"	4
5	221848	Space, Tube 3/4" LG	1
6	223849	Washer, Lock 3/8" ID	1
7	221847	Washer, Flat 3/8" / M10 - Hard YZ	1
8	221846	HHCS 3/8 NC X 1 1/2 GR8 ZP	1
9	221845	Clamp, Double Hose	1
10	216049	Grommet, Hose Hole 1.25	3
11	**221844**	Kit, MD 9037/47/57 MTG (see page 173)	1

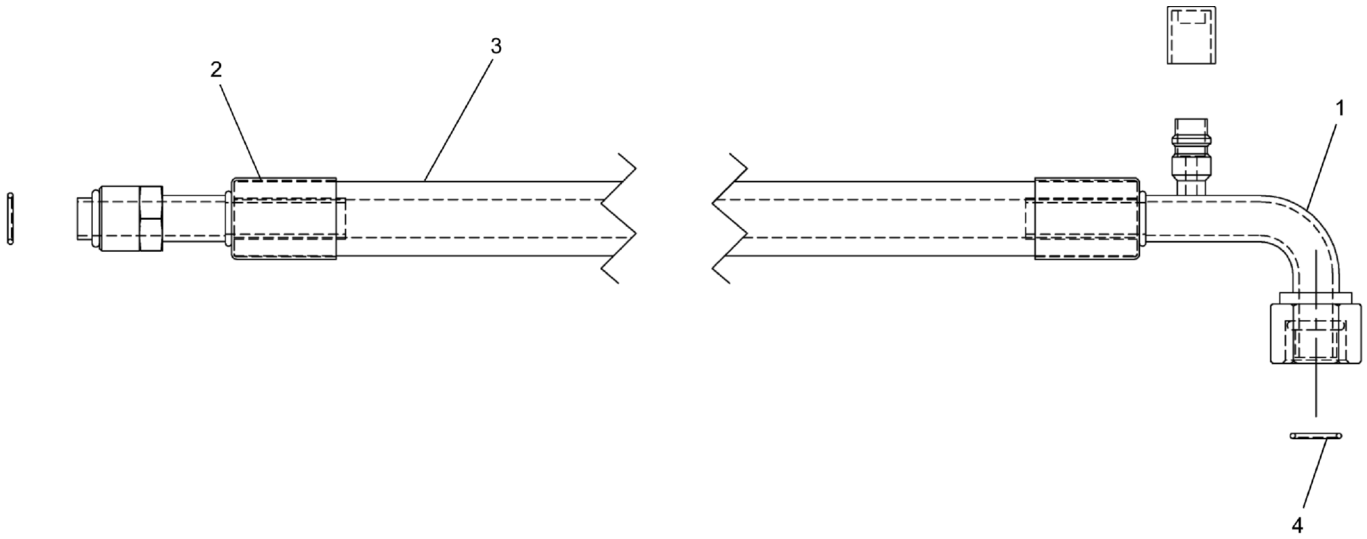

REF	PART NO.	DESCRIPTION	QTY
	219830 (Rev. 00)	*Hose ASSY. Evaporator to Compressor*	
1	222332	FTG, AC FOR #10 90-3 (SB1323-3)	1
2	222333	FTG, AC MOR #10 STR (SB1403)	1
3	222334	Hose, REFRIG. #10	1
4	220107	O-Ring #10 R-12/R134A	2

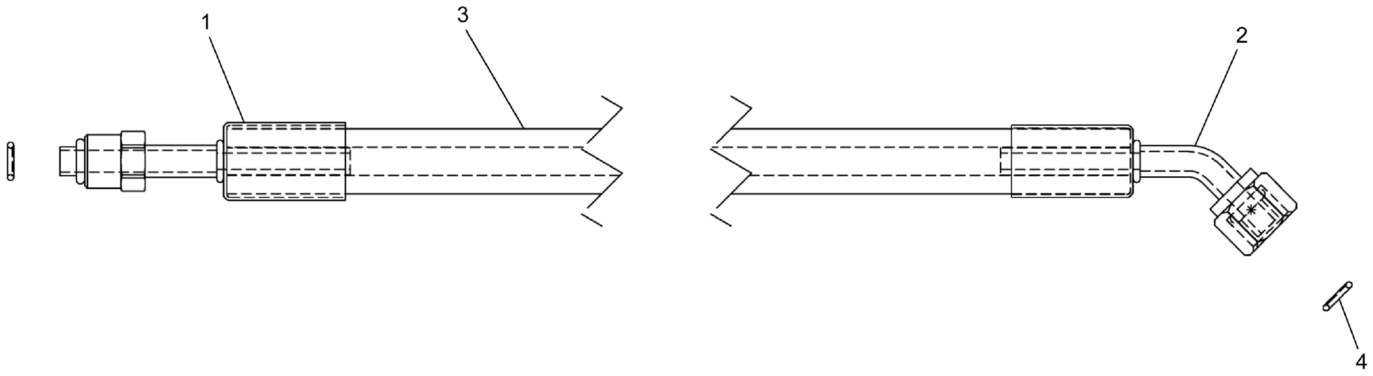

REF	PART NO.	DESCRIPTION	QTY
	219829 (Rev. 00)	*Hose Assembly Drier to Evaporator*	
1	222335	FTG, AC MOR #6 STR (SB1401)	1
2	222336	FTG, AC FOR #6 45 (SB1311)	1
3	222337	Hose, REFRIG. #6	1
4	219792	O-Ring, #6 R-134A/R-12	2

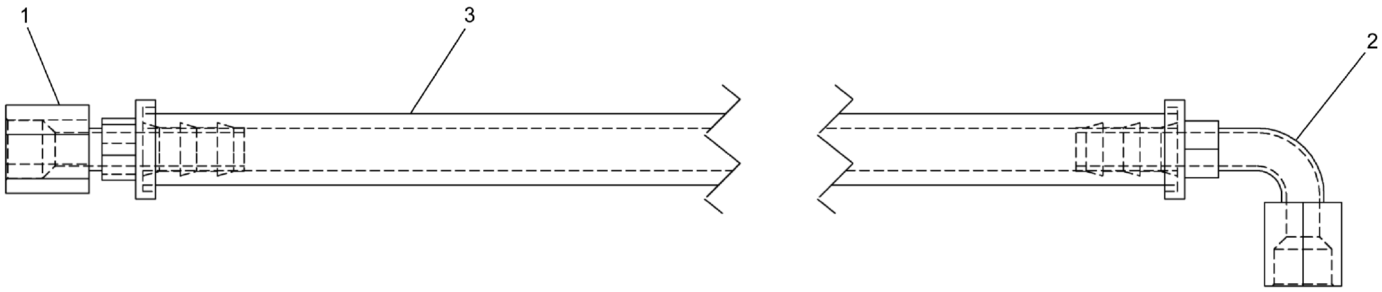

REF	PART NO.	DESCRIPTION	QTY
	219831 (Rev. 00)	*Hose ASSY, -6HYD Case Drain*	
1	222338	FTG, #6FJX - #6 BARB	1
2	222339	FTG, #6FJX90 - #6 BARB	1
3	222340	Hose, HYD. -6 Push Lock	1

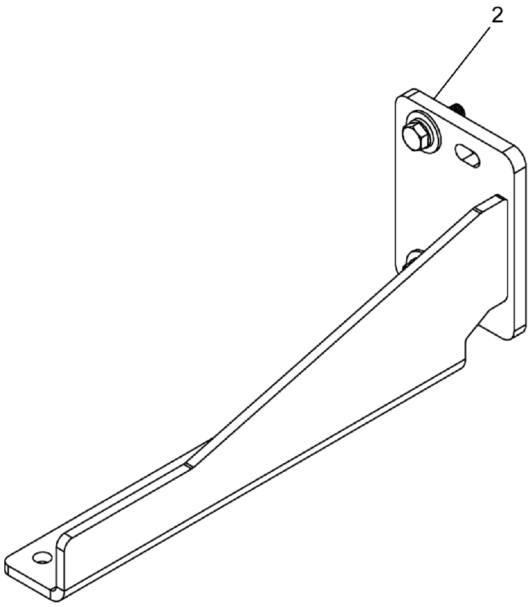

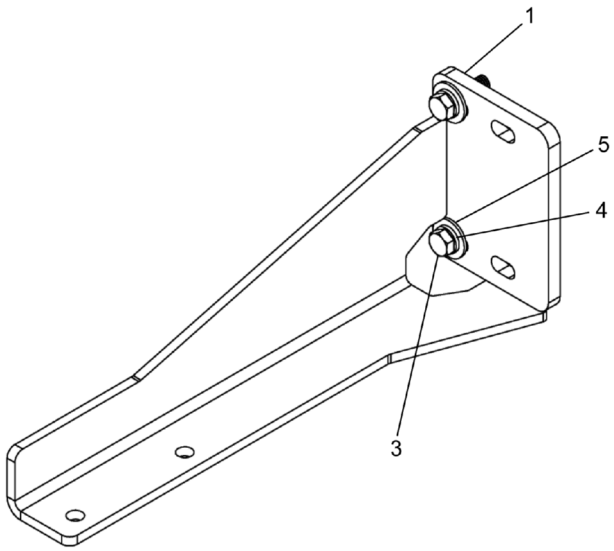

REF	PART NO.	DESCRIPTION	QTY
	221844 (Rev. 00)	*Kit, MD 9037/47/57 MTG*	
1	222341	BRKT, MTG Right	1
2	222342	BRKT, MTG Left	1
3	221800	HHCS 3/8 NC X 1-1/4 GR8 ZP	4
4	223849	Washer, Lock 3/8" ID	4
5	221847	Washer, Flat 3/8" / M10 - Hard YZ	4

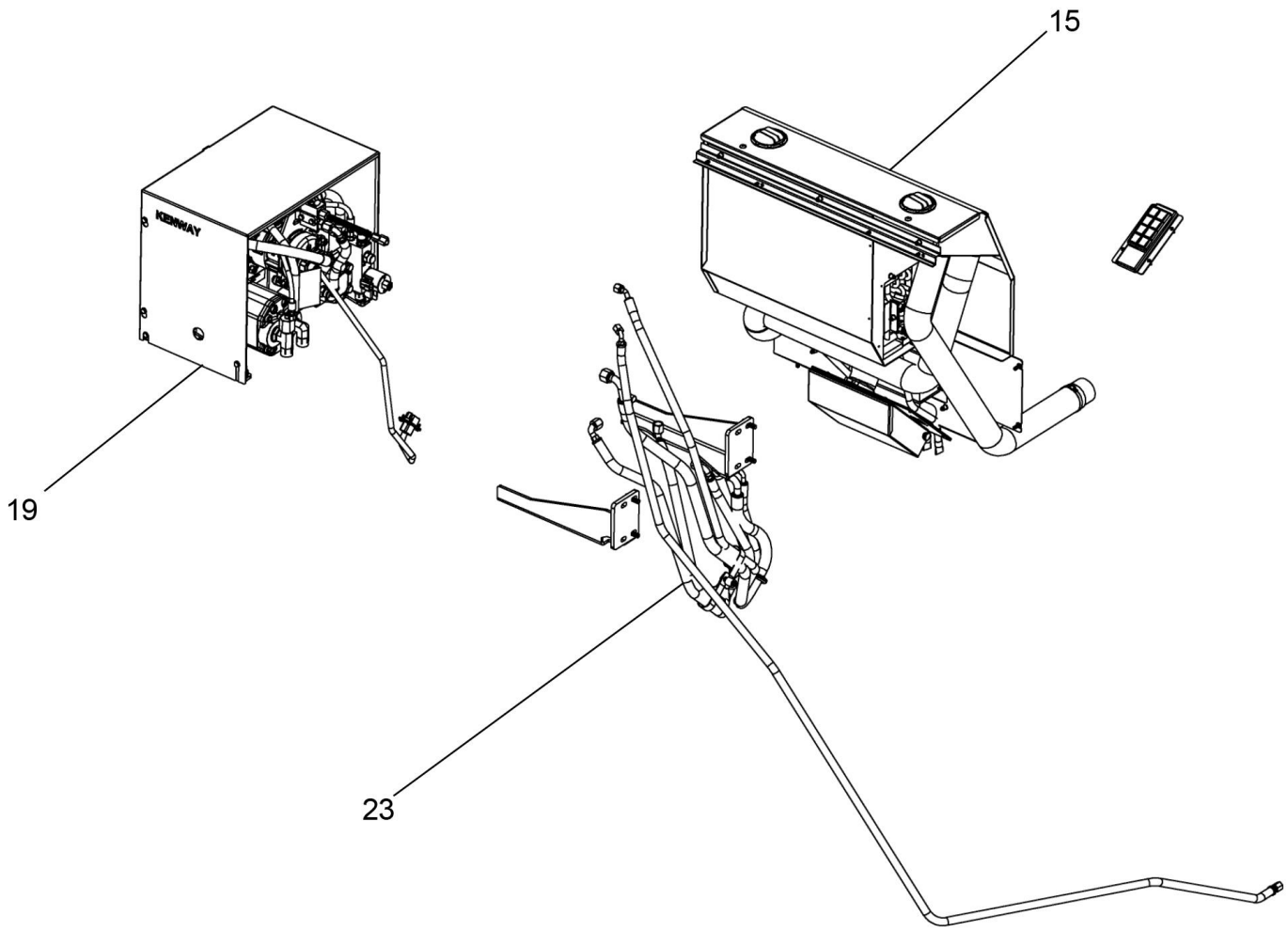
15
19
23
KENWAY

REF	PART NO.	DESCRIPTION	QTY
	T110026 (Rev. A)	*Deluxe A/C & Flameless Heat*	
1*	1200-59	HHCS 3/8NC x 1	1
2*	1209-3	Washer 5/16	1
3*	1210-20	Washer, Lock 3/8	1
4*	12019-112	Tee, -6	1
5*	1222-202	Plastic Tie	6
6*	1240-29	Clamp P, 1.125 DIA	1
7*	1200-57	HHCCS, 3/8" x 3/4"	1
8*	12508-24	Sleeve	1
9*	707 4108-76	Hose, -12	1
10*	721 0253-60	Hose, -12	1
11*	1219-802	Elbow, 90, MJIC-12/MORB-12	2
12*	1219-820	Adapter, MJIC-24/MORB-24	1
13*	441 6828	Relay 20/30 AMP	1
14*	1200-416	Bolt, 1/4-20 x 3/4	2
15	**T109883**	Cab Assembly Kit (see page 176)	1
16*	Bag ASSY	Bag ASSY, Switch Plate	1
17*	Adapter	Adapter, "Y" Flex hose 2.5"	1
18*	Flex Tube	Flex Tube 2.5" OD x 18"	1
19	**T109886**	Hydraulic Drive Unit (see page 184)	1
20*	HHCS, 3/8 x 1-1/4 GR8	HHCS, 3/8 x 1-1/4 GR8	4
21*	Washer, Lock 3/8 ID	Washer, Lock 3/8 ID	4
22*	Nut, HEX 3/8-16NC	Nut, HEX 3/8-16NC	4
23	**T109948**	Hose & Drive Mounting Kit, Kenway (see page 197)	1
24*	Washer, Lock 3/8" ID	Washer, Lock 3/8" ID	4
25*	Washer, Flat 3/8"/M10	Washer, Flat 3/8"/M10	4
26*	HHCS 3/8 x 1-1/4 GR8	HHCS 3/8 x 1-1/4 GR8	4
27*	Bracket, Left Mounting	Bracket, Left Mounting	1
28*	Bracket, Right Mounting	Bracket, Right Mounting	1
29*	Hose, Case Drain -6	Hose, Case Drain -6	1
30*	Hose, Refrigerant -6	Hose, Refrigerant -6	1
31*	Hose, Refrigerant -10	Hose, Refrigerant -10	1
32*	Hose, Heater -8	Hose, Heater -8	2
33*	Clamp, Double	Clamp, Double	2

* ITEM NOT SHOWN IN ILLUSTRATION

WHEN ORDERING PARTS, SPECIFY MODEL NUMBER, SERIAL NUMBER AND DESCRIPTION OF PARTS REQUIRED

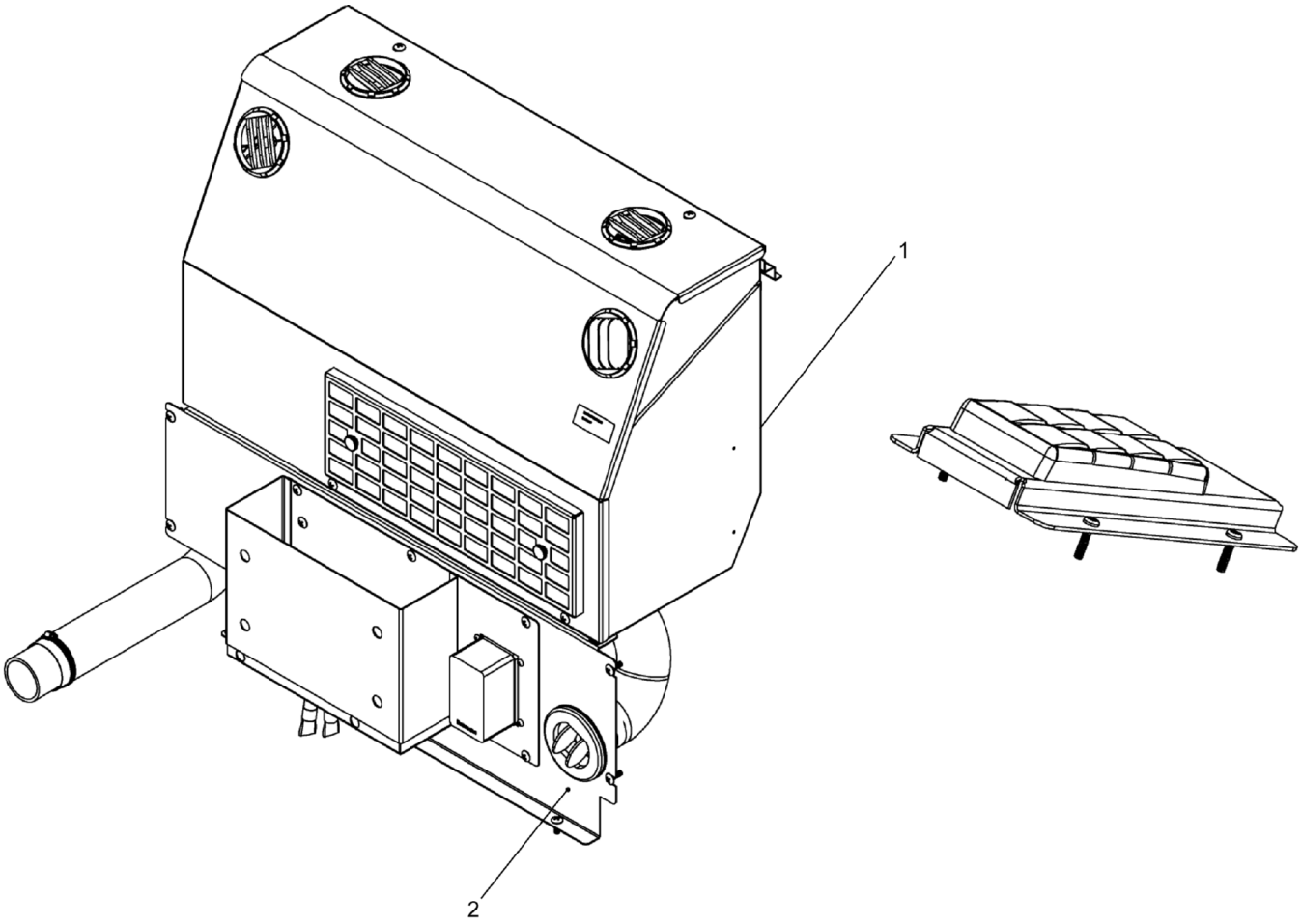

REF	PART NO.	DESCRIPTION	QTY
	T109883 (Rev. 00)	*Cab Assembly Kit*	
1	**T110024**	Blower ASSY, AC & Heat (see page 177)	1
2	**221879**	Shelf ASSY (see page 181)	1

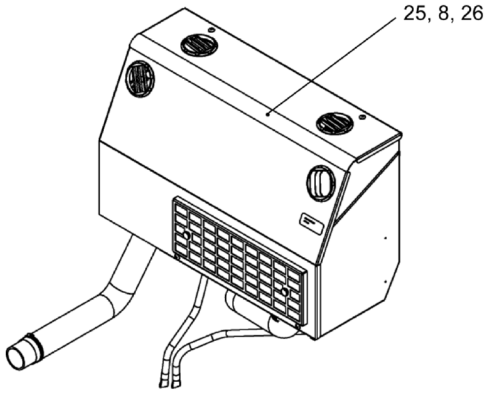

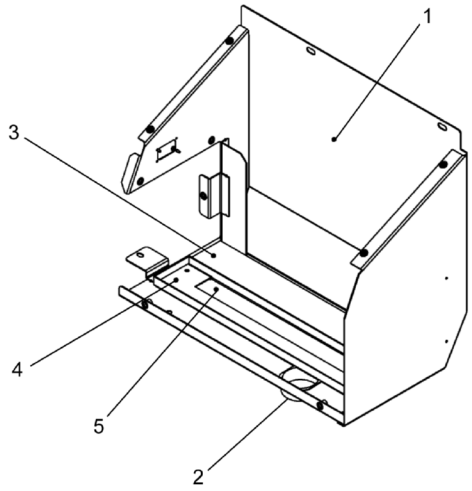

ASSY STAGE 1

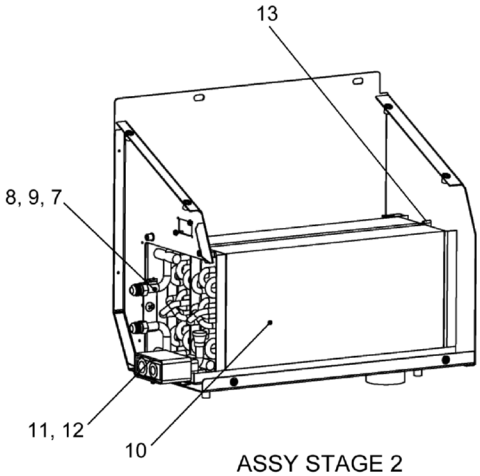

ASSY STAGE 2

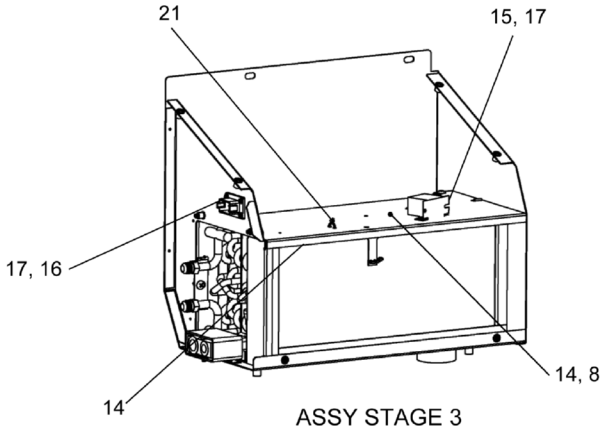

ASSY STAGE 3

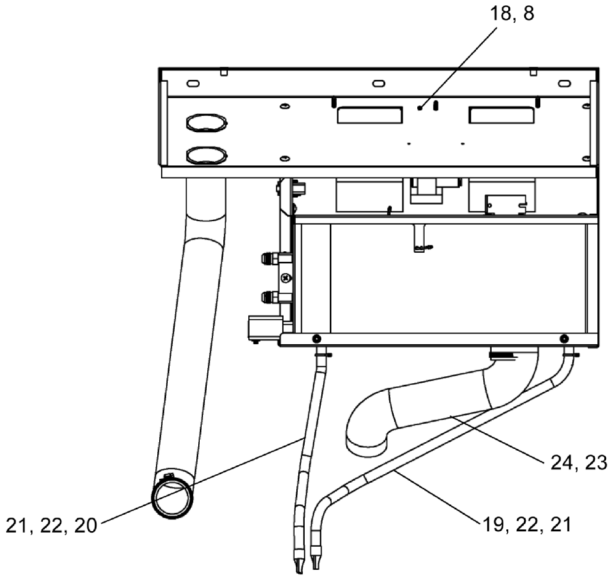

ASSY STAGE 4

REF	PART NO.	DESCRIPTION	QTY
	T110024 (Rev. A)	*Blower ASSY, AC & Heat*	
1	221856*	HSG Main HB9	1
2	221857	Adapter, Hose 2.5"	1
3	221858*	Foam, .5 X 2.88 X 19.75 ADH BCK	1
4	221859*	Support, Coil	1
5	221860*	Drain Pan	1
6**	228269*	Sealant, Silicone Clear	0.05 BTL
7	221861	Coil, Oil Heat	1
8	221862*	Screw, PTH 1/4-20 X 3/4Black Zinc	12
9	227718	Seal, FLARETITE JIC -08	2
10	**221863**	Group, Evaporator Coil (see page 179)	1
11	221864*	Nut WHIZLOCK 1/4-20 NC	1
12	221816*	HHCS, 1/4 NC X 1.5	1
13	221865	Clamp, Metal Chassis	1
14	221866*	Cover, Coil	1
15	219733	Thermostat, Fixed	1
16	221868	Wire Harness, HB9	1
17	221869*	Screw, #8 X ½, Self Drilling	6
18	221870	Group, Blower 12V	1
19	221871	Drain Tube, 1/2 ID CORR. X 32"	1
20	221871	Drain Tube, 1/2 ID CORR. X 32"	1
21	221873*	Tie, Plastic 4"	4
22	219925	Tube, KAZOO Drain Valve	2
23	228270	Clamp, Hose (1.8"-2.75")	1
24	221854	Hose, Duct 2.5" X 3.0 FT	1
25	**221877**	Group, Cover (see page 180)	1
26	221841*	Label, KW Serial #	1

* ITEM NOT SOLD SEPARATELY
** ITEM NOT SHOWN IN ILLUSTRATION

WHEN ORDERING PARTS, SPECIFY MODEL NUMBER, SERIAL NUMBER AND DESCRIPTION OF PARTS REQUIRED

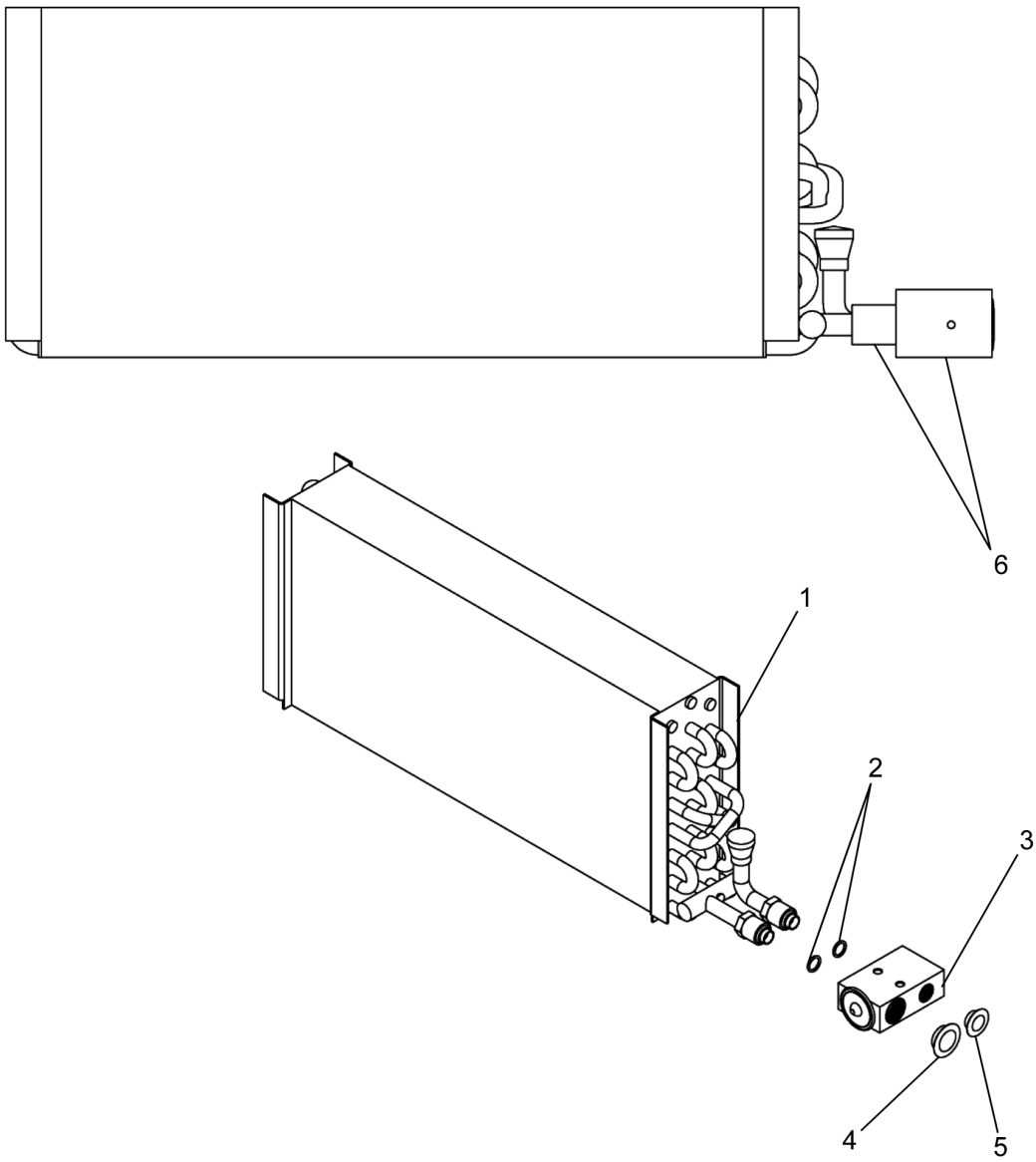

REF	PART NO.	DESCRIPTION	QTY
	221863 (Rev. 00)	*Group, Evaporator Coil*	
1	228271	Coil, Evaporator	1
2	215839	O-RING, #8 R-12/R134A	2
3	219736	Valve, EXP. Block	1
4	223830*	Cap, Plastic #10 F10R	1
5	223831*	Cap, Plastic #6 F10R	1
6	223821	TAR Tape	1

* ITEM NOT SOLD SEPARATELY

WHEN ORDERING PARTS, SPECIFY MODEL NUMBER, SERIAL NUMBER AND DESCRIPTION OF PARTS REQUIRED

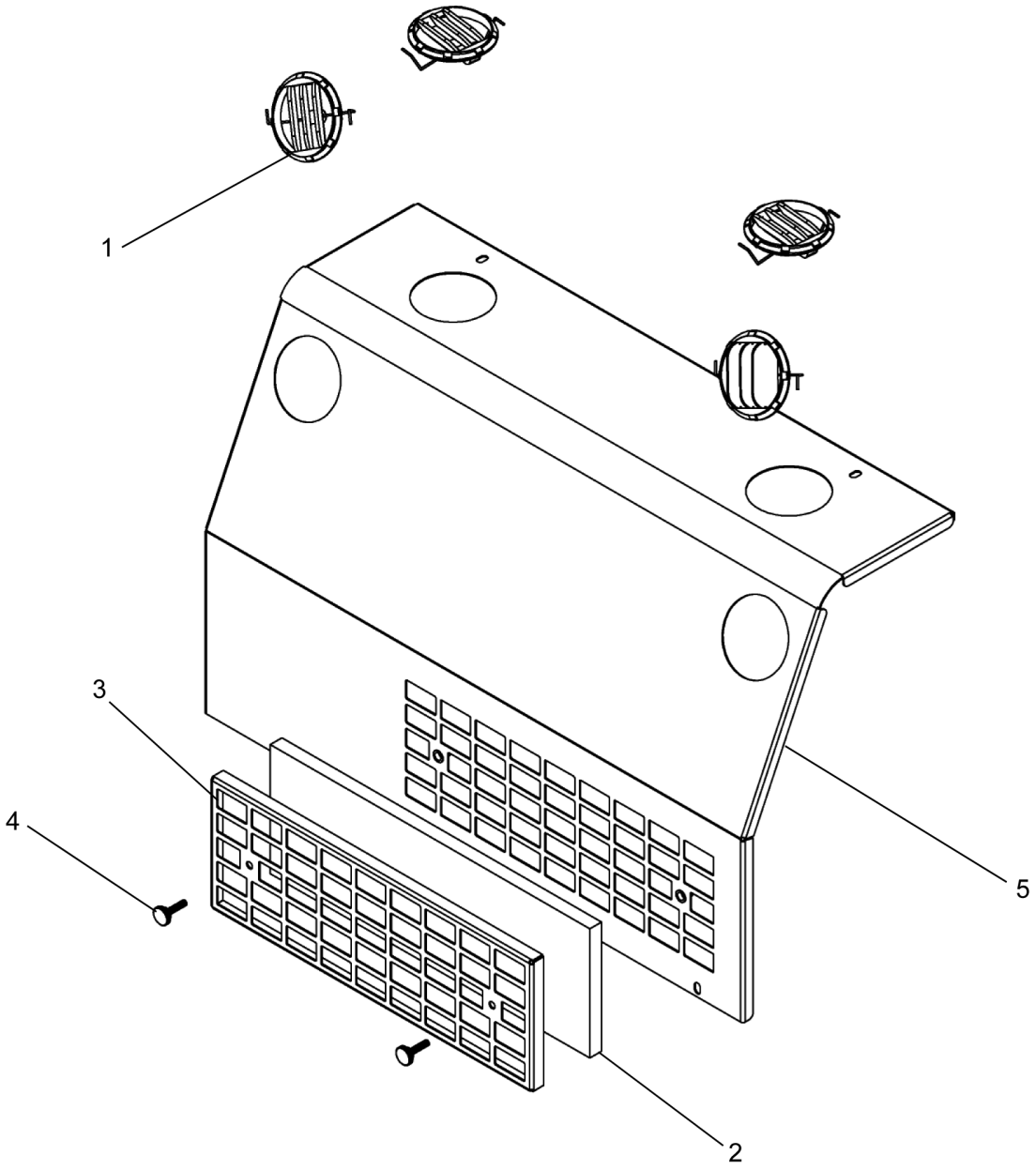

REF	PART NO.	DESCRIPTION	QTY
	221877 (Rev. 00)	*Group, Cover*	
1	219727	Louver, 3.4" OD	4
2	228272	Filter, RECIRC	1
3	228273*	Bracket, Filter	1
4	219738	Knob, 1/4-20X1"	2
5	228274*	Cover, 02-HB9	1

* ITEM NOT SOLD SEPARATELY

WHEN ORDERING PARTS, SPECIFY MODEL NUMBER, SERIAL NUMBER AND DESCRIPTION OF PARTS REQUIRED

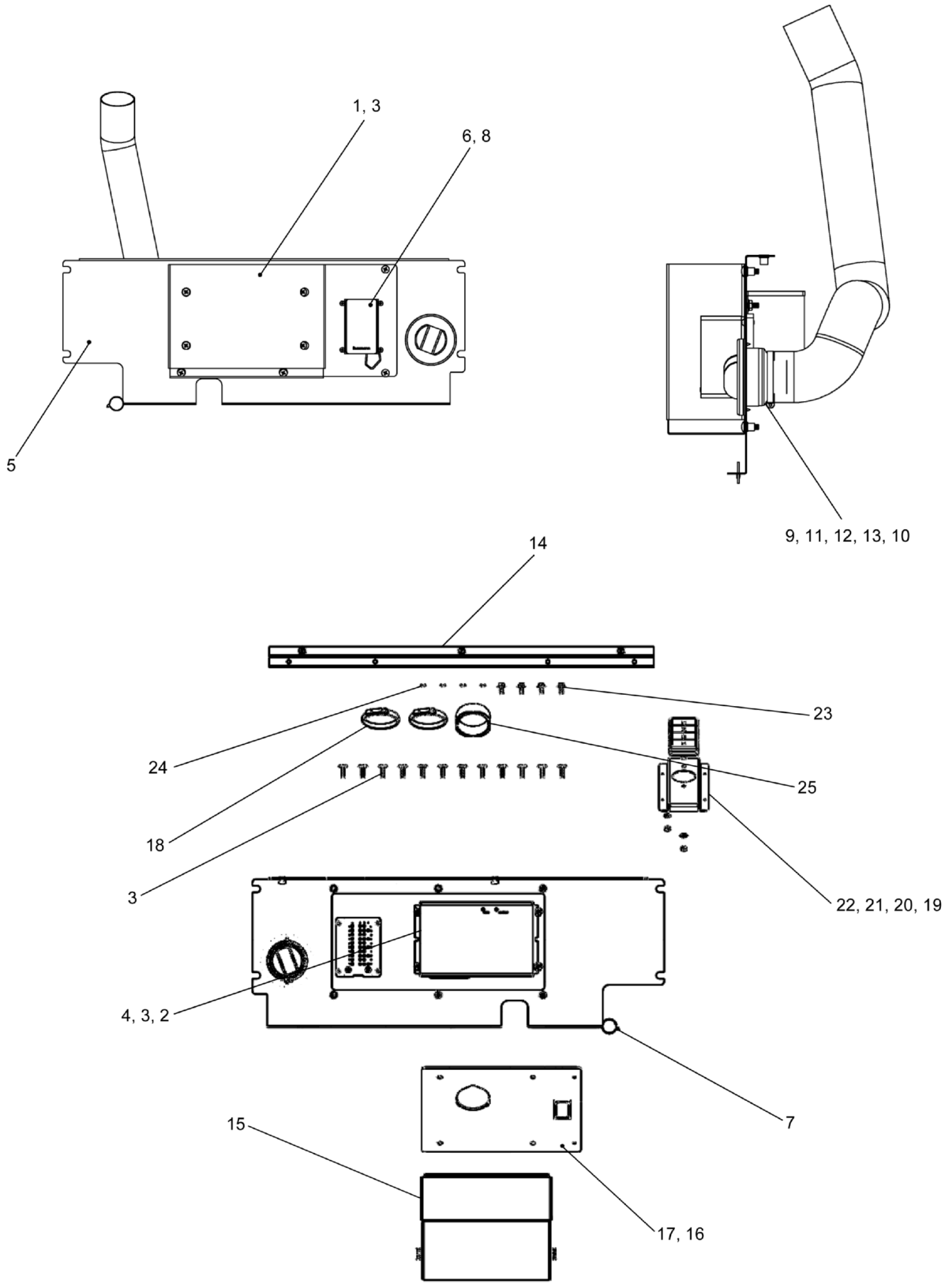

WHEN ORDERING PARTS, SPECIFY MODEL NUMBER, SERIAL NUMBER AND DESCRIPTION OF PARTS REQUIRED

LOAD KING BY CUSTOM TRUCK ONE SOURCE	**SHELF ASSEMBLY**	DATE: Released 08-2018	**CHAPTER**
		MODEL: 480-126	**1**
		PAGE: 181	

REF	PART NO.	DESCRIPTION	QTY
	221879 (Rev. 00)	*Shelf ASSY*	
1	221880*	Panel W/ Pocket	1
2	221881	Controller, Programmable	1
3	221862*	Screw, PTH 1/4-20 X 3/4Black Zinc	22
4	221864*	Nut WHIZLOCK 1/4-20 NC	4
5	221884*	Shelf	1
6	**221882**	Fuse Panel ASSY, HB9 (see page 183)	1
7	221874*	Tie, Plastic 7"	1
8	221883*	Screw, Machine #10-32 X 1/2" Round Phillips Head ZC	4
9	228275	Panel MNT, Louver W/ H.A.	1
10	228276*	Screw, #6 X 3/8" Flat Head Phillips SELF Tapping	2
11	221886	Louver, 4" W/O MNT	1
12	221854*	Duct Hose 2.5" ID X 45"	1
13	228270*	Clamp, Hose (1.8"-2.75")	1
14	221878*	BRKT, Cab MTG	1
15	**219836**	Outside Air Kit (see page 164)	1
16	221889*	Gasket, Fresh Air Adapter	1
17	221890*	Panel, Fresh Adapter	1
18	221876	Clamp, Snapper 2 1/2" DIA Plastic	2
19	221891*	Panel, Keypad MTG	1
20	221892	Keypad, 4 X 2 Load King	1
21	221817*	Washer, Lock 1/4 YZ	2
22	221893*	Nut, HEX M6 X 1.0	2
23	221894*	HWH Slotted 1/4-20 X .5"- Self Tapping	4
24	221895*	Screw, Phillips Pan Head #6-32 X 5/8"	4
25	221857	Adapter, Hose 2.5"	1

* ITEM NOT SOLD SEPARATELY

WHEN ORDERING PARTS, SPECIFY MODEL NUMBER, SERIAL NUMBER AND DESCRIPTION OF PARTS REQUIRED

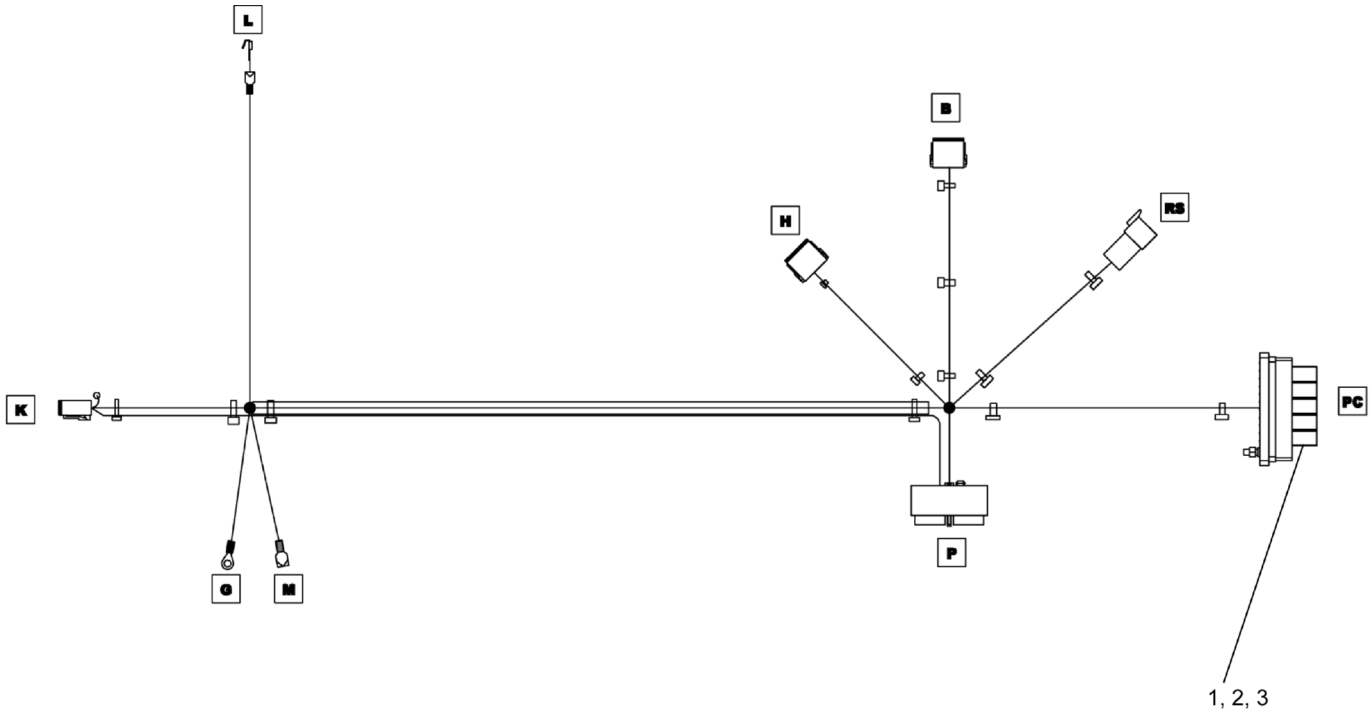

REF	PART NO.	DESCRIPTION	QTY
	221882 (Rev. 00)	*Fuse Panel ASSY, HB9*	
1	228277	Relay	5
2	228278	10 AMP Fuse	5
3	228279	20 AMP Fuse	2

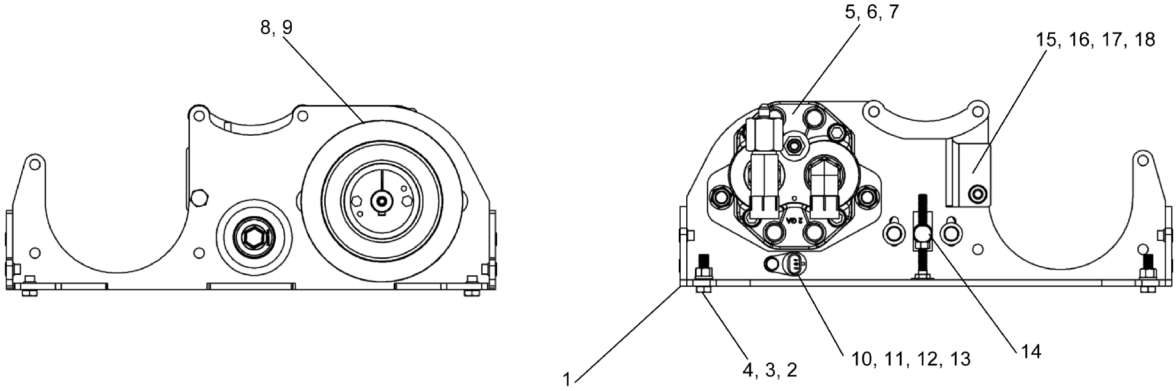

ASSY STAGE 1

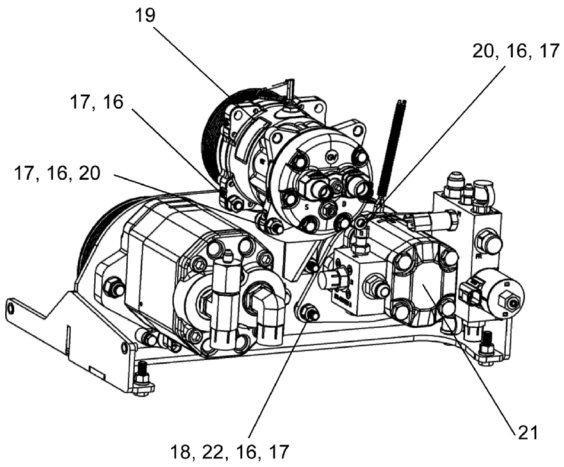

ASSY STAGE 2

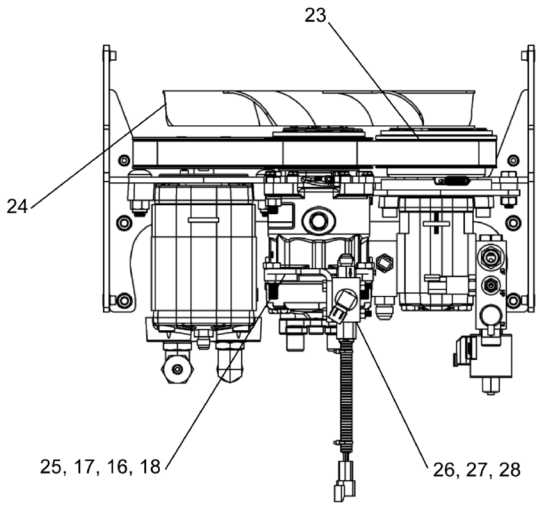

ASSY STAGE 3

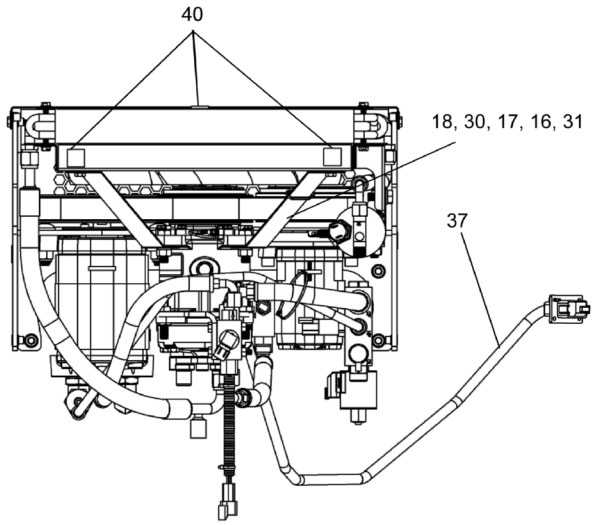

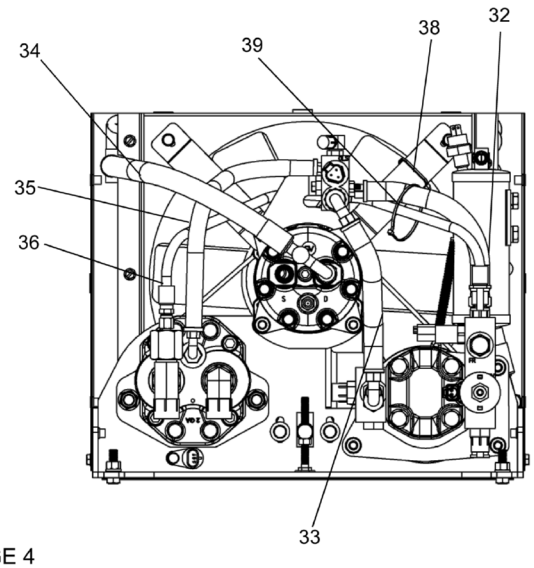

ASSY STAGE 4

WHEN ORDERING PARTS, SPECIFY MODEL NUMBER, SERIAL NUMBER AND DESCRIPTION OF PARTS REQUIRED

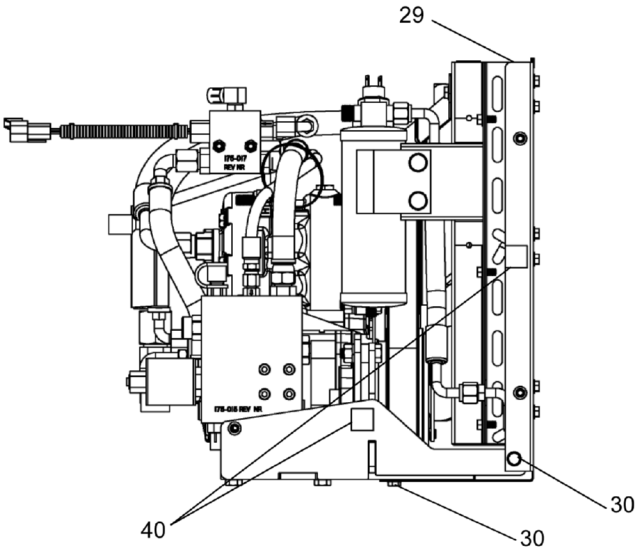

ASSY STAGE 4

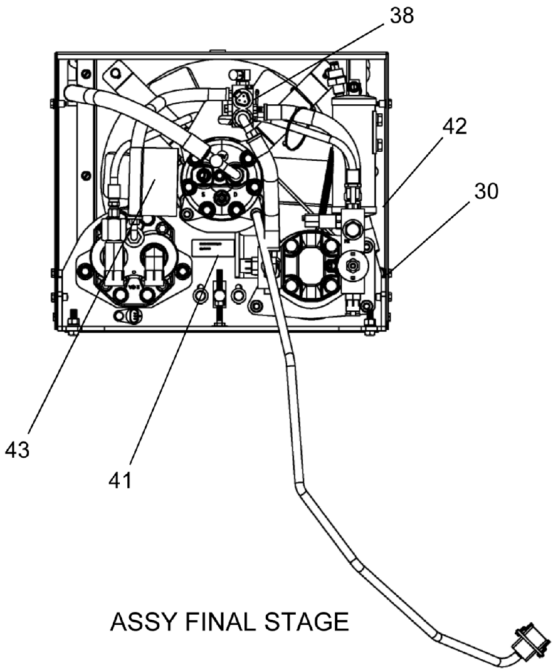

ASSY FINAL STAGE

REF	PART NO.	DESCRIPTION	QTY
	T109886 (Rev. 00)	*Hydraulic Drive Unit*	
1	221797*	Base, HYD	1
2	221798*	Nut, HEX 3/8-16NC YZ	4
3	223849*	Washer Lock 3/8" ID	4
4	221800*	HHCS 3/8 NC X 1-1/4 GR8 ZP	4
5	**221808**	Motor ASSY, 1.59 9067 AOH (see page 187)	1
6	221809*	Carriage Bolt, 1/2 NC X 1.75 ZP	2
7	221810*	Nut HEX 1/2-13 NC Nylock ZP GR 8	2
8	221812*	Bushing, 7/8"ID Split W/1/4 Keyway, Black Oxide Finish	1
9	221813	Pulley, HYD PV8	1
10	221815	Sensor Speed	1
11	221816*	HHCS, 1/4 NC X 1.5	1
12	221817*	Washer, Lock 1/4 YZ	1
13	227570	Spacer, Aluminium .63/.25 X .625	1
14	**227571**	ASSY, Belt Tensioner (see page 188)	1
15	221818*	BRKT, COMP MTG	1
16	221819*	Washer, Lock M10 ZP	12
17	221820*	Nut, HEX M10-1.5 YZ	13
18	219935*	HHCS M10-1.5 X 35mm GR10.9 YZ (16mm-Head)	1
19	227572	COMP, SD7H15 12 N 4 S8 119mm (FLX7) - Flag TERM.	1
20	221823*	HHCS M10-1.5 X 40mm GR10.9 YZ (16mm-Head)	2
21	**221822**	Pump/Block ASSY MD9067 12V (see page 189)	1
22	221824	Spacer, Tube .75 X .405 X .321" LG Painted	3
23	221825	Belt, Drive PV8 X 45.0	1
24	227573	Fan Mounting Group-9067	1
25	221829*	BKT, OLS	1
26	**221830**	ASSY, Oil Level Sensor Block (see page 194)	1
27	221831*	HHCS 1/4-20 NC X 2 ZP	2
28	221832*	Nut, HEX 1/4-20 Nylock	2
29	**221833**	Condenser Assembly (9067) (see page 195)	1
30	221835*	HHCS 1/4-20 X 3/4 (WHIZLK)	12
31	221834*	Brace	2
32	221837	Hose ASSY, Push On, -8 STR-90	1
33	221838	Hose ASSY, Push On, -8 90-90	1
34	227575	Hose ASSY, COMP-CD	1
35	221839	Hose ASSY, Push On, -6 90-90	1
36	221836	Hose ASSY, HYD 04FJX-04FJX-23.7" SAE100R2	1
37	221840	Wire Harness, 9067	1
38	221874*	Tie, Plastic 7"	2
39	216050*	Tie, Plastic 15"	1
40	227576*	Gasket, .9" Square or .9" Round	7
41	221841*	Label, KW Serial #	1
42	221842	Cover, 17-9067	1
43	227577*	Label, Oil Charge Warning	1
44**	221873*	Tie, Plastic 4"	1

* ITEM NOT SOLD SEPARATELY
** ITEM NOT SHOWN IN ILLUSTRATION

WHEN ORDERING PARTS, SPECIFY MODEL NUMBER, SERIAL NUMBER AND DESCRIPTION OF PARTS REQUIRED

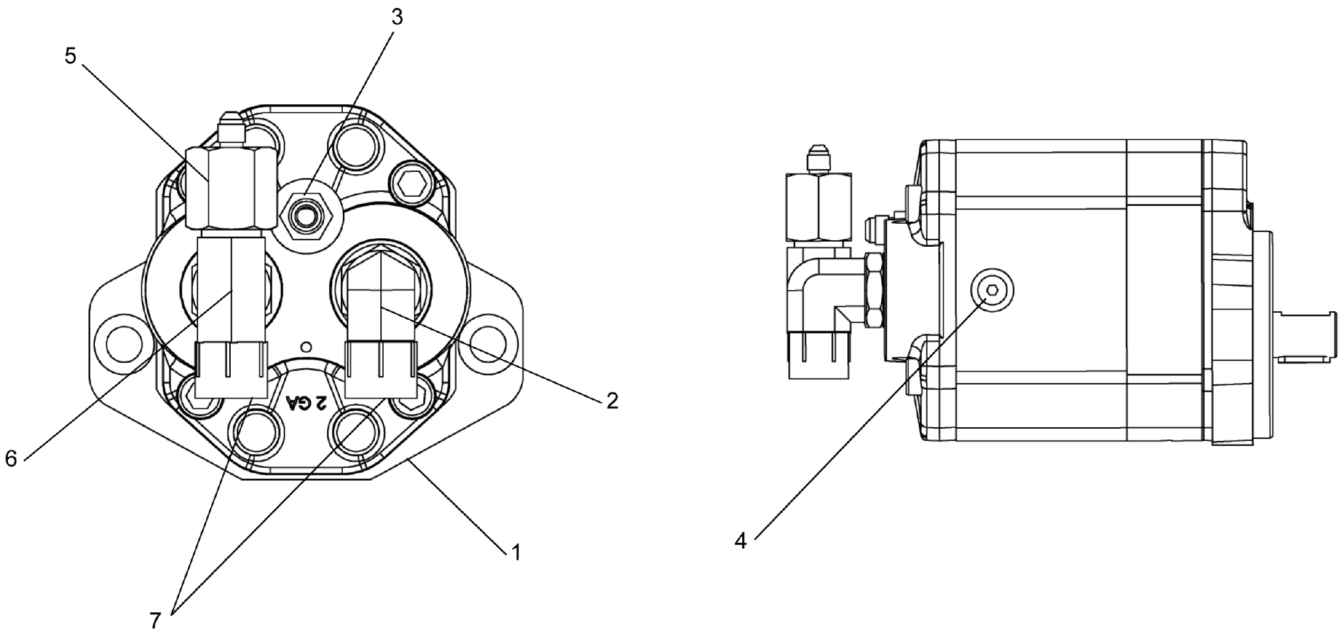

REF	PART NO.	DESCRIPTION	QTY
	221808 (Rev. 00)	*Motor ASSY, 1.59 9067 AOH*	
1	228280	Motor, HYD Gear 1.59 W/ 9067 AOH MODS	1
2	228281*	Adapter, #12 MB X #12 MJ 90	1
3	223059*	Adapter, #6MB - #6MJ	1
4	228282*	Plug, HEX Socket SAE -4 ORB W/ BUNA	1
5	228283*	Adapter, -12FJ X -4 MJ	1
6	228284*	Adapter, Tee -12 MJ -12 MJ-12 MB Branch	1
7	228285*	Cap, Plastic 12JF 1 1/16-12 (FITS #12 JIC Male)	2

* ITEM NOT SOLD SEPARATELY

WHEN ORDERING PARTS, SPECIFY MODEL NUMBER, SERIAL NUMBER AND DESCRIPTION OF PARTS REQUIRED

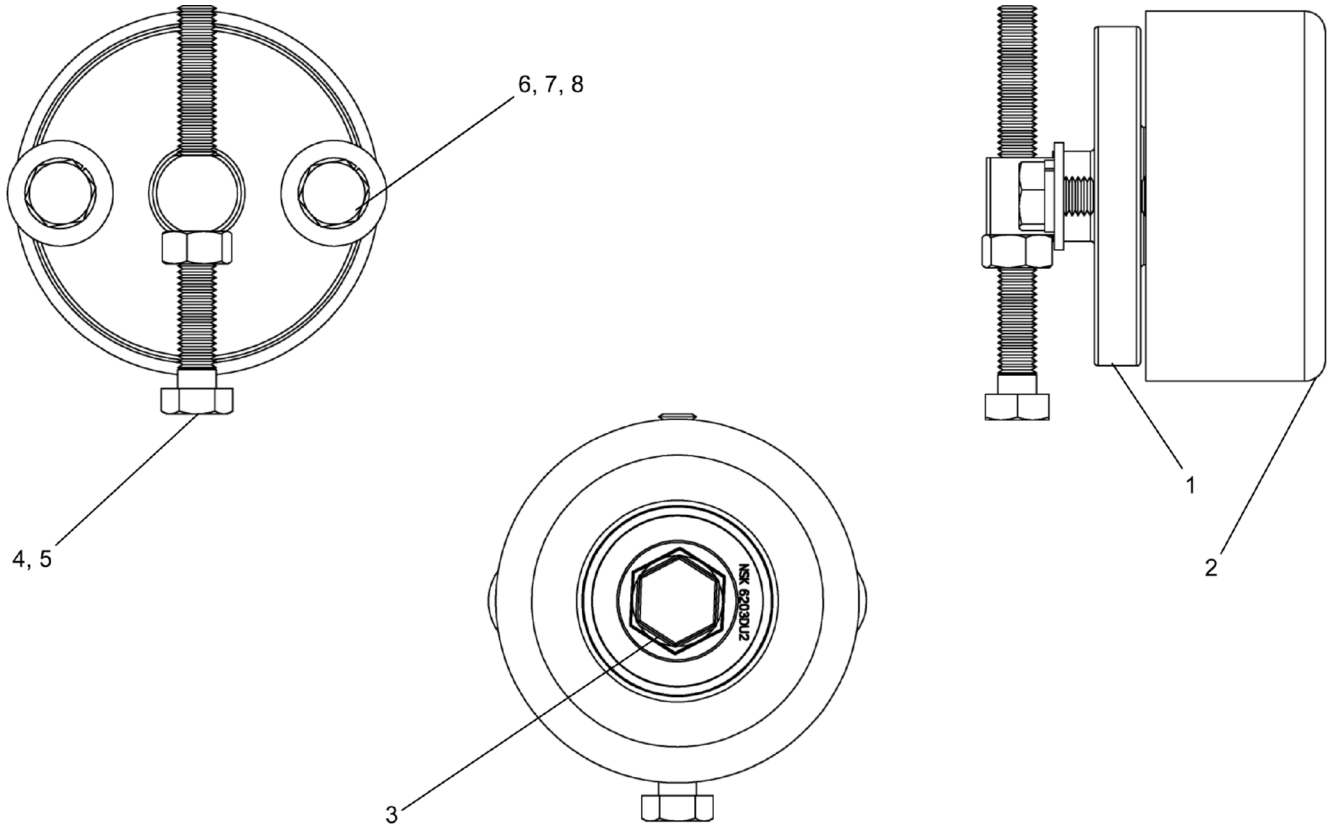

REF	PART NO.	DESCRIPTION	QTY
	227571 (Rev. 00)	*ASSY, Belt Tensioner*	
1	221801	Tensioner, Turned	1
2	221806	Pulley ASSY, Backside PV8 X 3.0"	1
3	221807	Shoulder Bolt, 7/16-20 X 1 1/2	1
4	221803*	HHCS M8-1.25 X 80 GR8.8 Full Thread ZP	1
5	221802*	Nut HEX M8 x 1.25 mm	1
6	221804*	HHCS M8X1.25 X 25 mm	2
7	221814*	Washer, Lock M8 ZP	2
8	221805*	Washer, Flat 5/16" YZ	2

* ITEM NOT SOLD SEPARATELY

WHEN ORDERING PARTS, SPECIFY MODEL NUMBER, SERIAL NUMBER AND DESCRIPTION OF PARTS REQUIRED

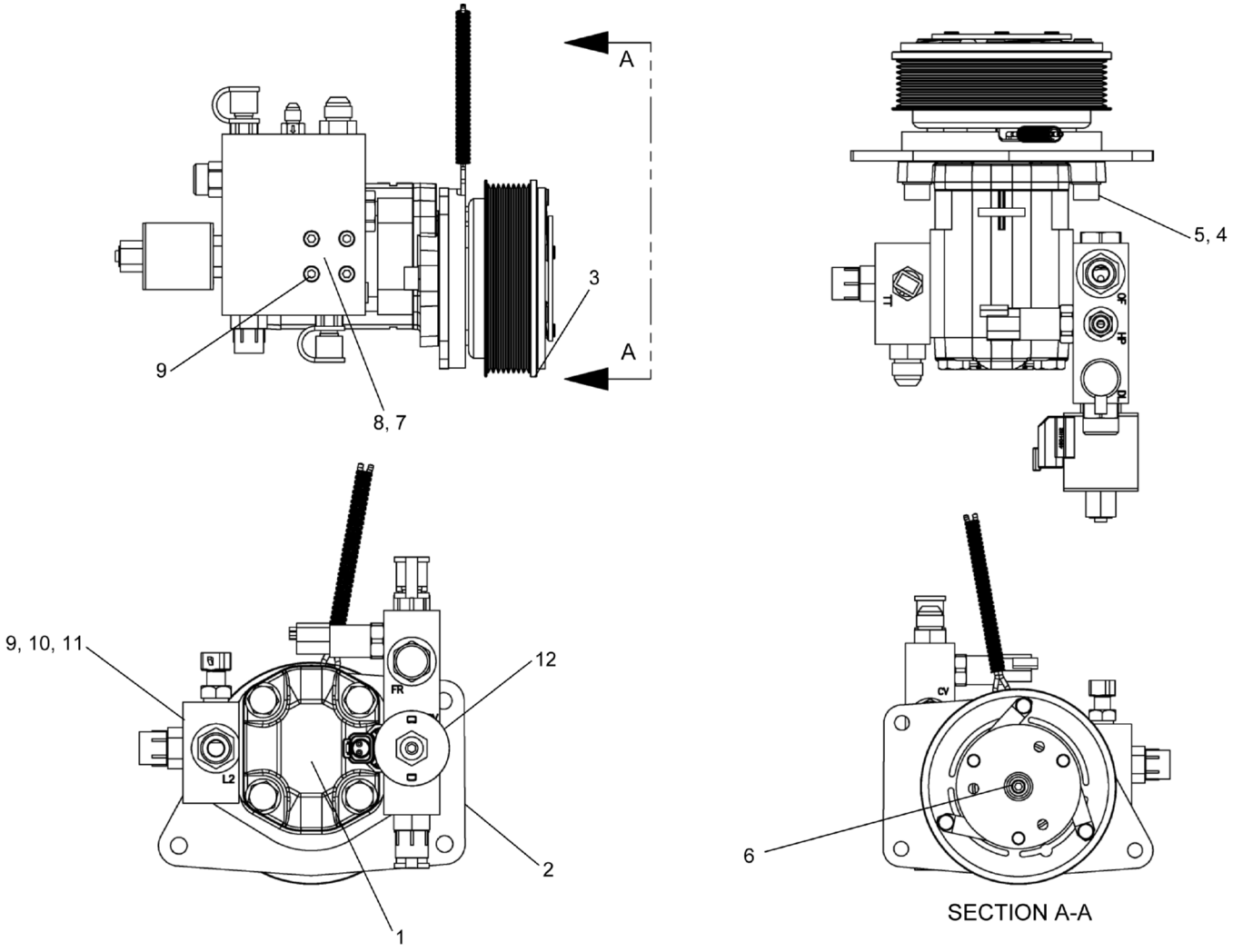

WHEN ORDERING PARTS, SPECIFY MODEL NUMBER, SERIAL NUMBER AND DESCRIPTION OF PARTS REQUIRED

LOAD KING BY CUSTOM TRUCK ONE SOURCE

PUMP/BLOCK ASSEMBLY MD9067 12V

DATE: Released 08-2018

MODEL: 480-126

PAGE: 189

CHAPTER 1

REF	PART NO.	DESCRIPTION	QTY
	221822 (Rev. 00)	*Pump/Block ASSY MD9067 12V*	
1	228286	Pump, MARZ 1.09 CID.	1
2	228287*	Plate, Pump BRKT	1
3	228288	Clutch, HYD PV8 5.35" 12 V	1
4	221819*	Washer, Lock M10 ZP	2
5	228289*	Screw, SHCS M10-1.5 X 30MM GR12.9 Black	2
6	228290	SHCS 1/4-28NF X 1" ZP	1
7	219815	O-Ring, HYD SAE -117 VITON	1
8	**228291**	ASSY Heat Manifold (see page 191)	1
9	228292	SHCS M6 X 1.0 X 40mm GR 12.9	8
10	219826	O-Ring, HYD SAE-119	1
11	**228294**	ASSY, Return Block (see page 193)	1
12	228295	Coil, HYD Valve 12V-Deutsch W/ Diode	1
13**	228296*	Threadlocker, High Strength	0.01 BTL

* ITEM NOT SOLD SEPARATELY
** ITEM NOT SHOWN IN ILLUSTRATION

WHEN ORDERING PARTS, SPECIFY MODEL NUMBER, SERIAL NUMBER AND DESCRIPTION OF PARTS REQUIRED

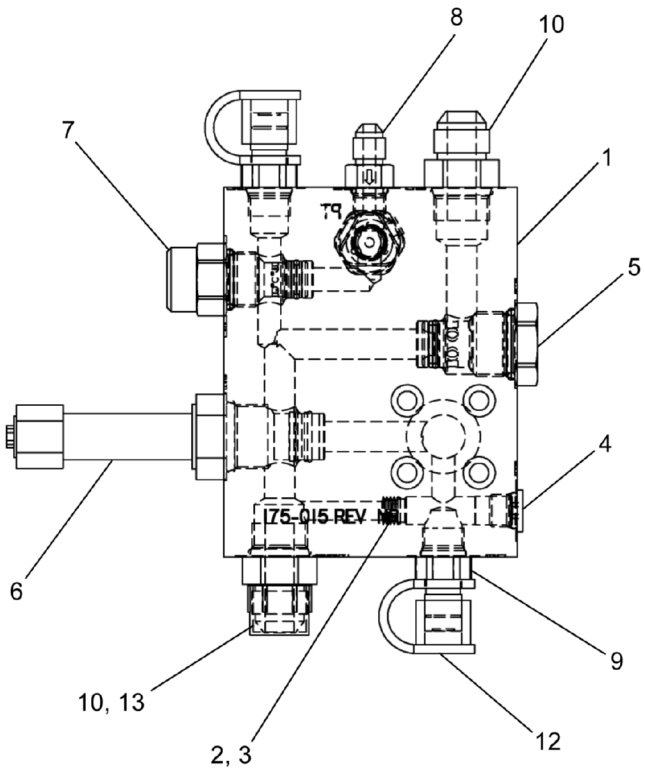

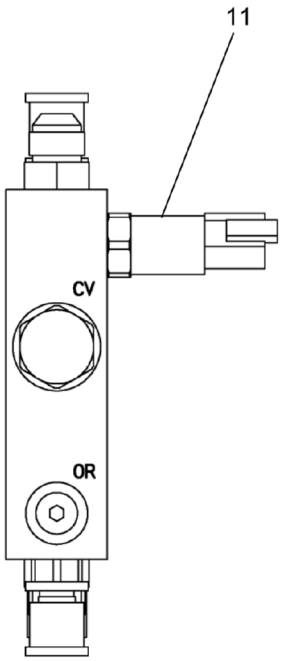

WHEN ORDERING PARTS, SPECIFY MODEL NUMBER, SERIAL NUMBER AND DESCRIPTION OF PARTS REQUIRED

REF	PART NO.	DESCRIPTION	QTY
	228291 (Rev. 00)	*ASSY Heat Manifold*	
1	228302	Manifold Block, Heat Side.	1
2	219819	Orifice Plug .040	1
3	228298*	Sealant, HYD Thread	0.001
4	228282*	Plug, HEX Socket SAE -4 ORB W/ BUNA	1
5	228303	Valve, HYD Check -10 100 PSI	1
6	219821	Valve, HYD PROP. Relief	1
7	228304	Valve, Flow Regulator.05 GPM	1
8	228305	Valve, Check Inline -4 MB X -4 MJ 5 PSI	1
9	219817	Nipple, Diagnostic	2
10	228299*	Adapter, -8MB to -8MJ	2
11	228306	Pressure Transducer 0-5000 PSI	1
12	219818	Dust Cover	2
13	228300*	Cap, Plastic 8JF 3/4-16 (FITS #8 JIC Male)	1

* ITEM NOT SOLD SEPARATELY

WHEN ORDERING PARTS, SPECIFY MODEL NUMBER, SERIAL NUMBER AND DESCRIPTION OF PARTS REQUIRED

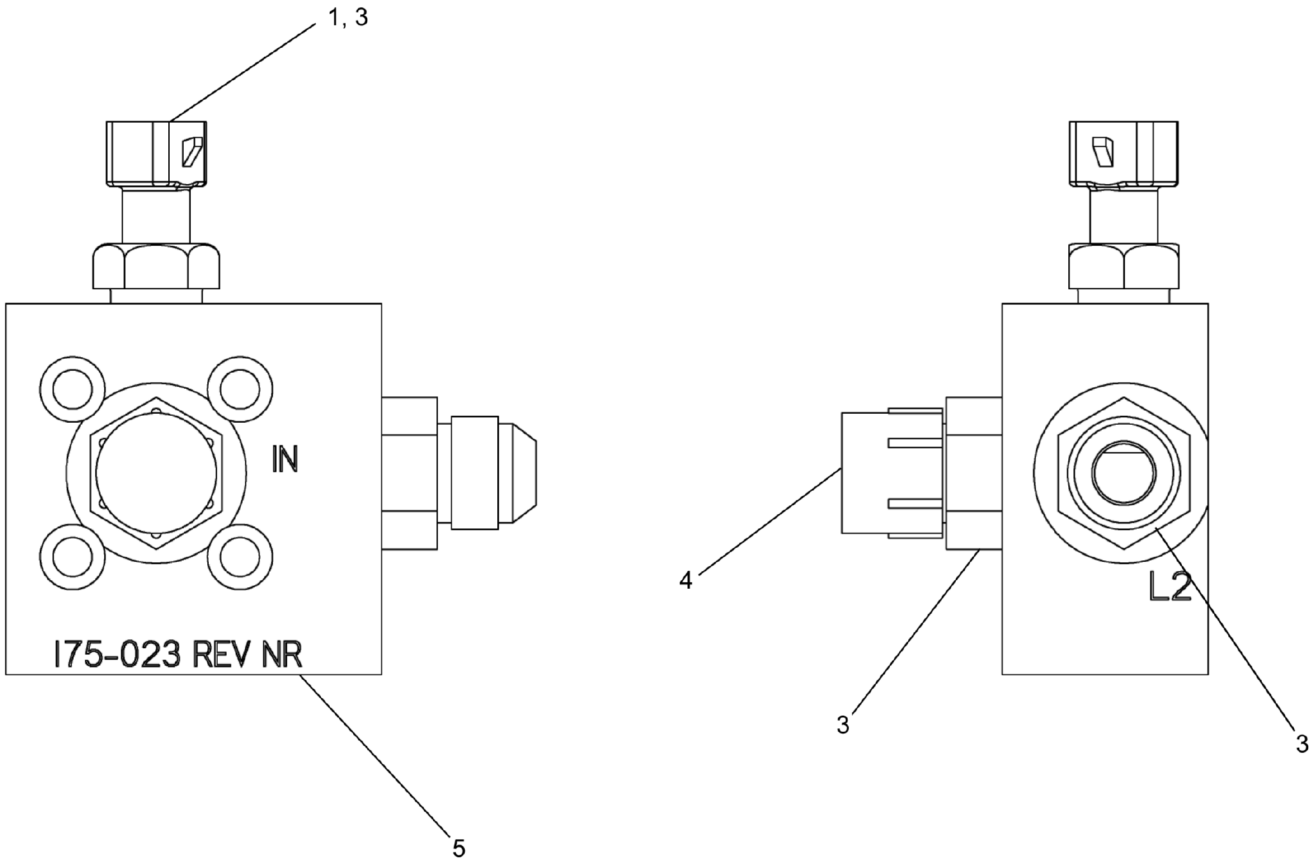

REF	PART NO.	DESCRIPTION	QTY
	228294 (Rev. 00)	*ASSY, Return Block*	
1	228297	Transducer, HYD Oil Temperature	1
2**	228298*	Sealant, HYD Thread	0.005
3	228299*	Adapter, -8MB to -8MJ	2
4	228300*	Cap, Plastic 8JF 3/4-16 (FITS #8 JIC Male)	1
5	228301	Manifold Block, Return Side (Deluxe)	1

* ITEM NOT SOLD SEPARATELY
** ITEM NOT SHOWN IN ILLUSTRATION

WHEN ORDERING PARTS, SPECIFY MODEL NUMBER, SERIAL NUMBER AND DESCRIPTION OF PARTS REQUIRED

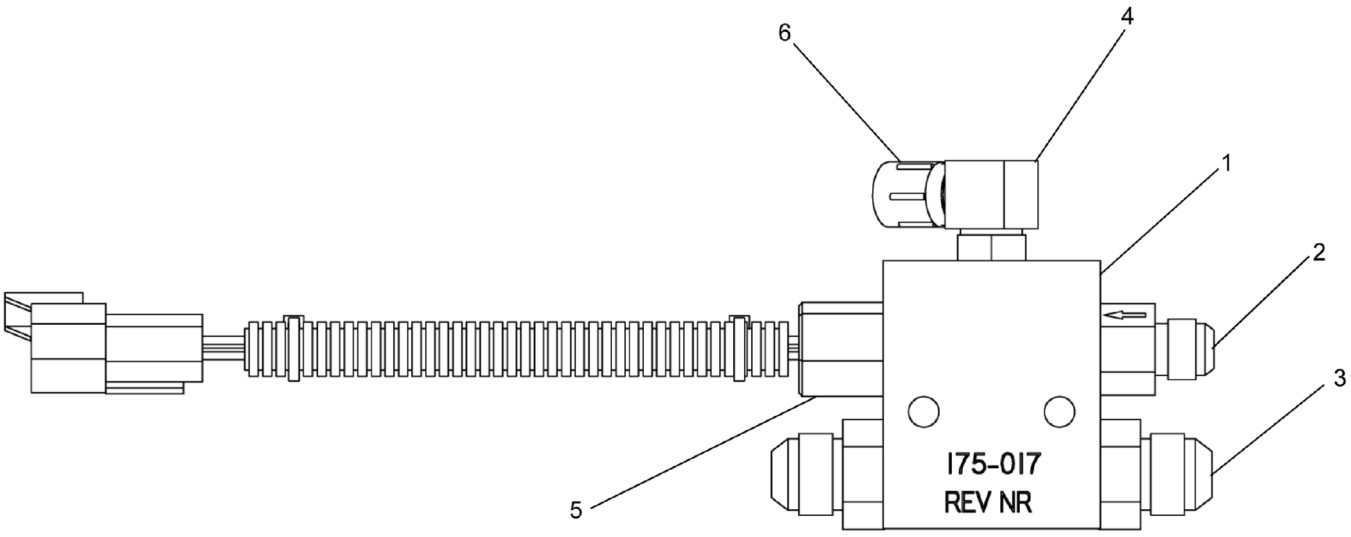

REF	PART NO.	DESCRIPTION	QTY
	221830 (Rev. 00)	*ASSY, Oil Level Sensor Block*	
1	228307	Manifold, Oil Sensor	1
2	219822	Check Valve, Inline -6MB -6MJ 5 PSI	1
3	228299*	Adapter, -8MB to -8MJ	2
4	228308*	Adapter, -6MB X -6MJ90	1
5	228309	Switch, Oil Level W/ DT04-3P; -8	1
6	228310*	Cap, Plastic 6JF 9/16-18 (FITS #6 JIC Male)	1

* ITEM NOT SOLD SEPARATELY

WHEN ORDERING PARTS, SPECIFY MODEL NUMBER, SERIAL NUMBER AND DESCRIPTION OF PARTS REQUIRED

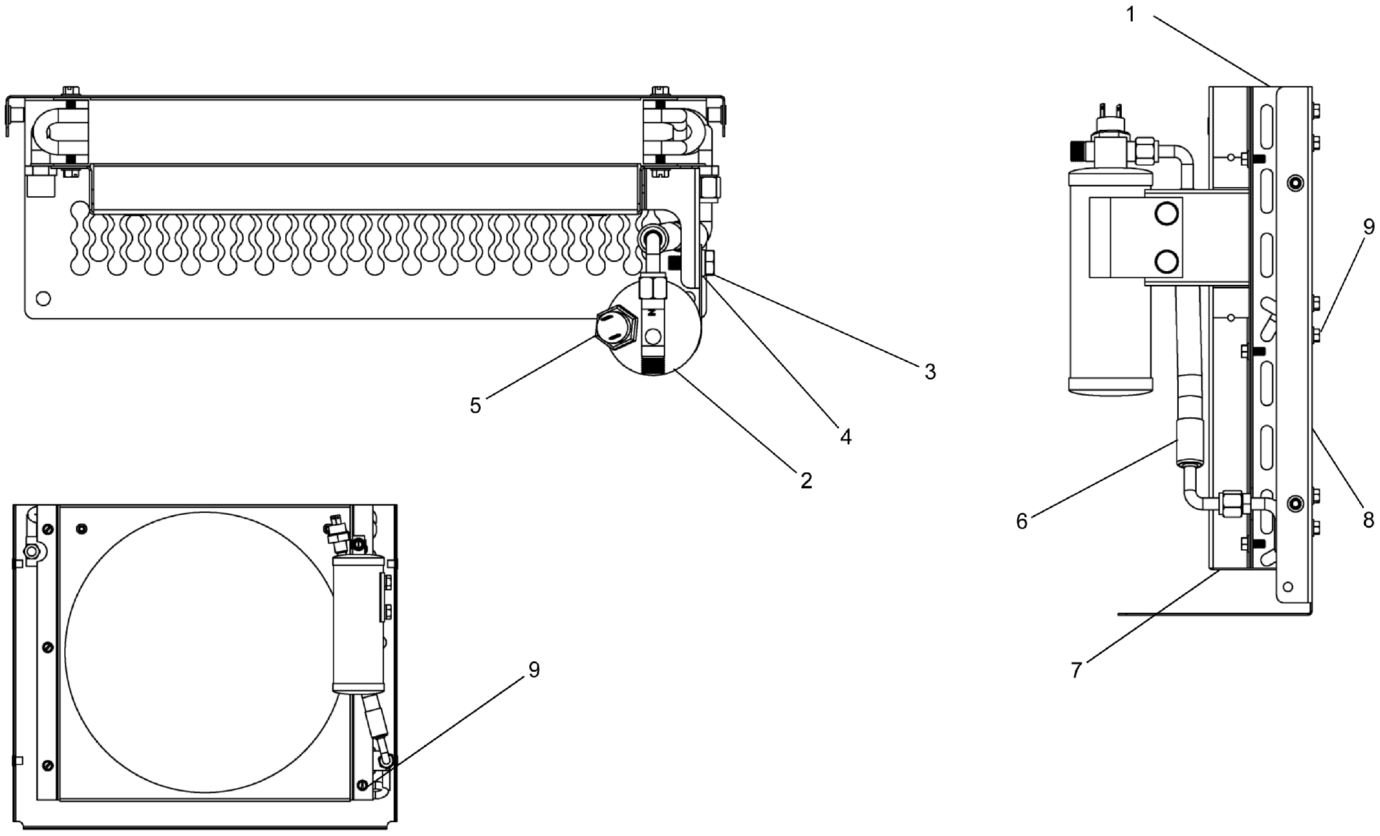

WHEN ORDERING PARTS, SPECIFY MODEL NUMBER, SERIAL NUMBER AND DESCRIPTION OF PARTS REQUIRED

LOAD KING BY CUSTOM TRUCK ONE SOURCE

CONDENSER ASSEMBLY

DATE: Released 08-2018

MODEL: 480-126

PAGE: 195

CHAPTER

1

REF	PART NO.	DESCRIPTION	QTY
	221833 (Rev. 00)	*Condenser Assembly (9067)*	
1	219790	Coil, Condenser	1
2	217198	Drier, O-Ring 2.5 X 8 W/ BRKT	1
3	226964*	HHCS M10-1.5 X 25MM GR 10.9 ZP	2
4	221819*	Washer, Lock M10 ZP	2
5	216048	Switch, Binary Pressure	1
6	219791	Hose ASSY, #6 COND-RD	1
7	228312*	Fan Shroud W/ Drier BRKT	1
8	228313	Panel, Front	1
9	221894*	HWH Slotted 1/4-20 X .5"- Self Tapping	12

* ITEM NOT SOLD SEPARATELY

WHEN ORDERING PARTS, SPECIFY MODEL NUMBER, SERIAL NUMBER AND DESCRIPTION OF PARTS REQUIRED

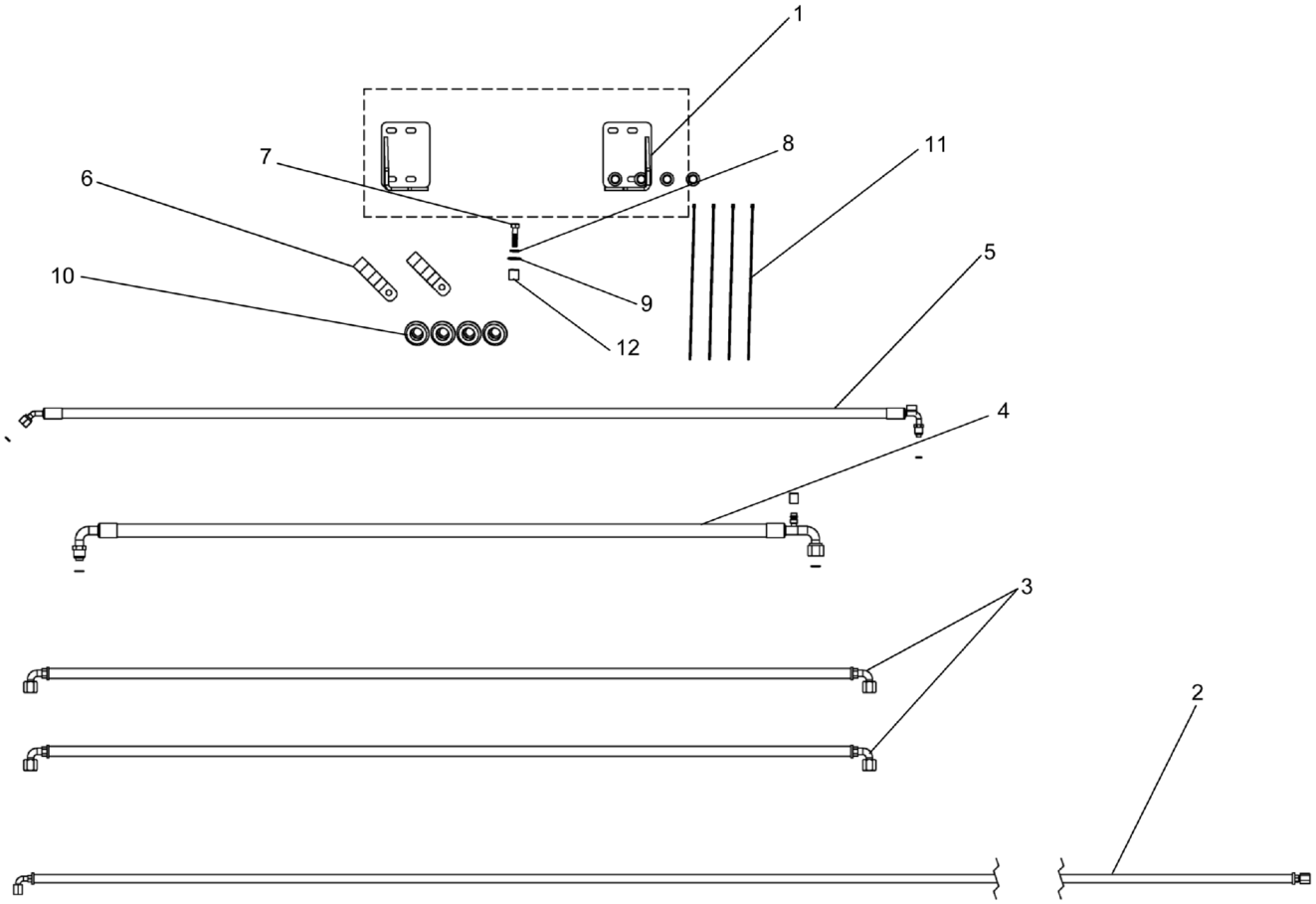

WHEN ORDERING PARTS, SPECIFY MODEL NUMBER, SERIAL NUMBER AND DESCRIPTION OF PARTS REQUIRED

LOAD KING BY CUSTOM TRUCK ONE SOURCE

HOSE & DRIVE MTG KIT
KENWAY, OPERATOR CAB

DATE: Released 08-2018

MODEL: 480-126

PAGE: 197

CHAPTER

1

REF	PART NO.	DESCRIPTION	QTY
	T109948 (Rev. 00)	*Hose & Drive Mounting Kit, Kenway*	
1	221844*	Kit, MD 9037/47/57 MTG	1
2	219831	Hose ASSY, - 6 HYD Case Drain	1
3	221851	Hose ASSY, HYD -8 90-90	2
4	221850	Hose ASSY, EVAP-COMP -6 90-90	1
5	221849	Hose ASSY, RD-TXV -6 45-90	1
6	221845*	Clamp, Double Hose	2
7	221846*	HHCS 3/8 NC X 11/2 GR8 ZP	1
8	223849*	Washer Lock 3/8" ID	1
9	221847*	Washer, Flat 3/8" / M10 -Hard YZ	1
10	216049	Grommet, Hose Hole 1.25	4
11	216050*	Tie, Plastic 15"	4
12	227568*	Spacer, Tube 3/4" LG Black	1

* ITEM NOT SOLD SEPARATELY

WHEN ORDERING PARTS, SPECIFY MODEL NUMBER, SERIAL NUMBER AND DESCRIPTION OF PARTS REQUIRED

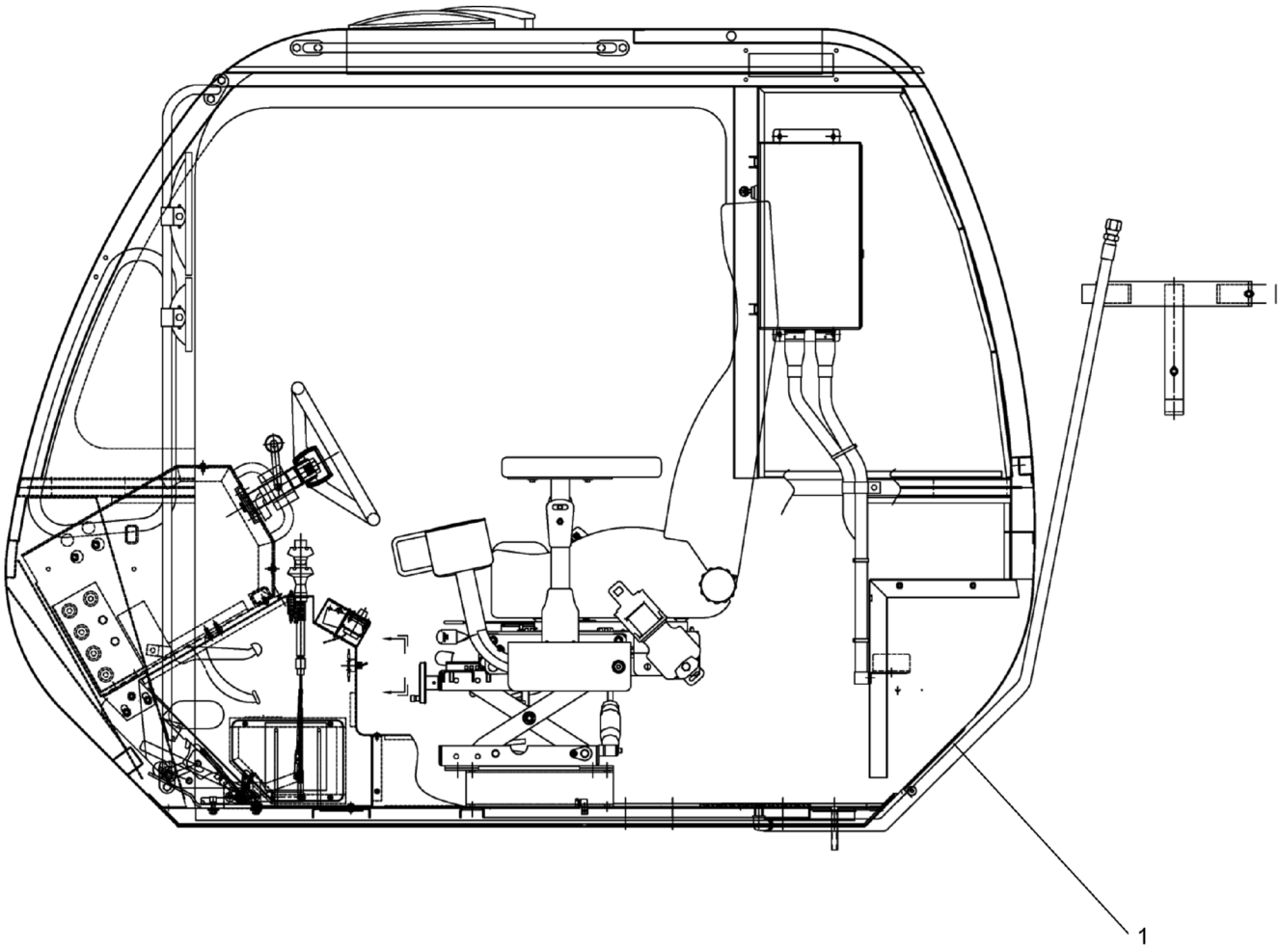

REF	PART NO.	DESCRIPTION	QTY
	709A7628 (Rev. 00)	*No Heater - Includes Cover*	
1	713-0148	Cover	1

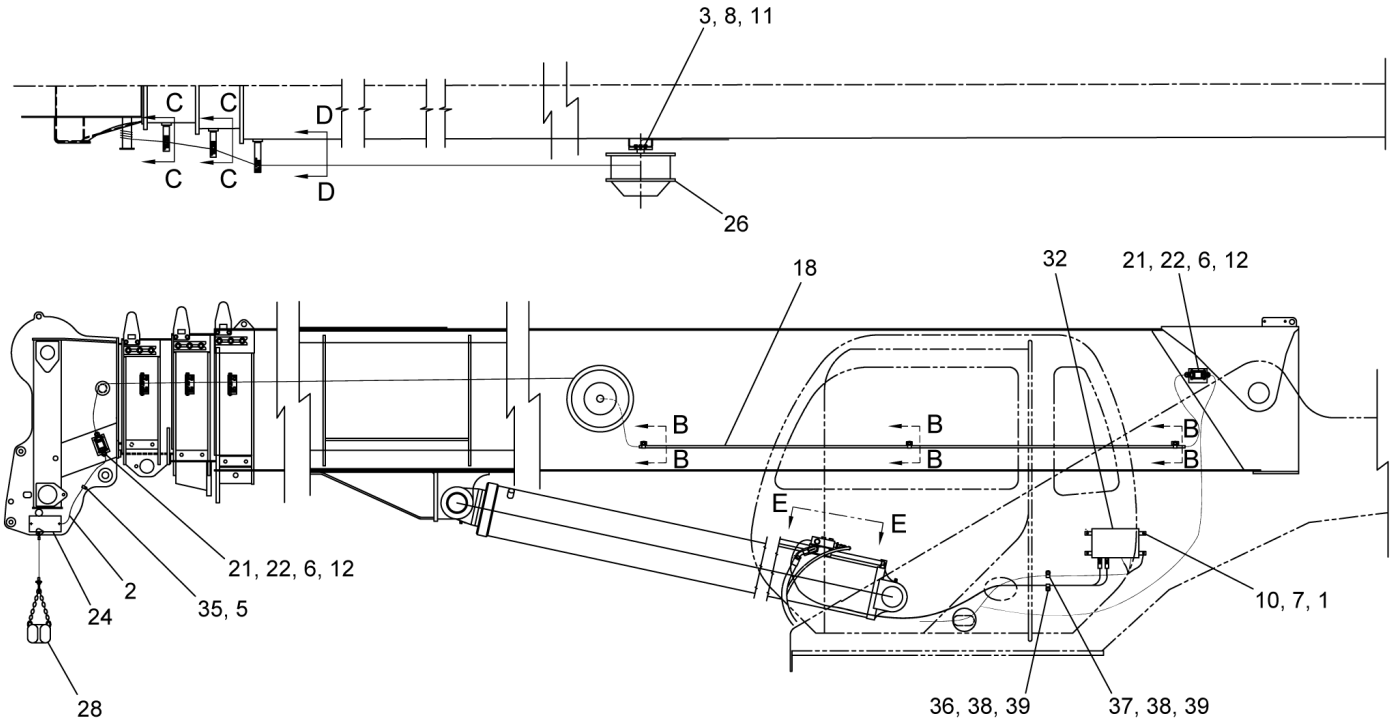

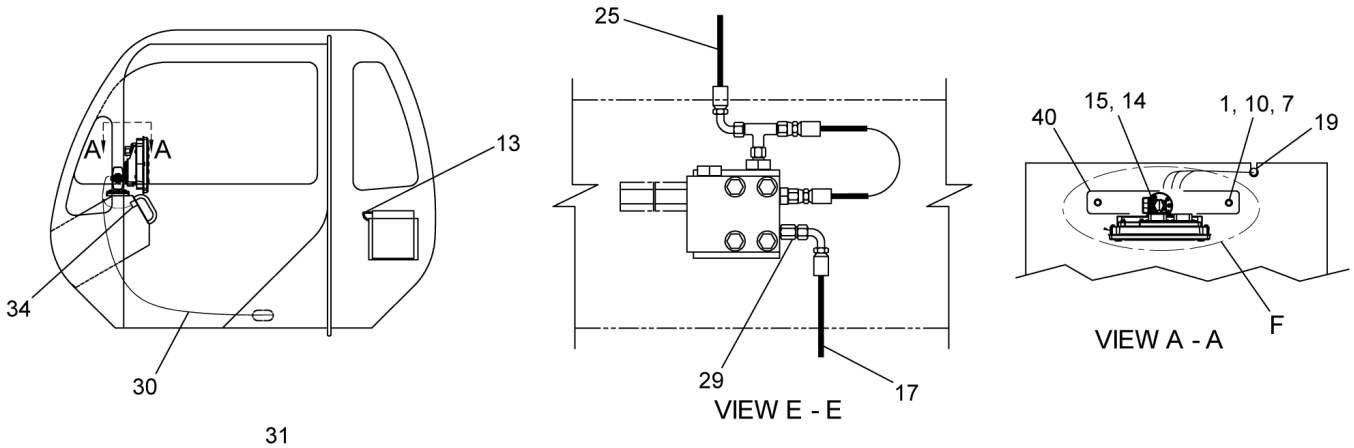

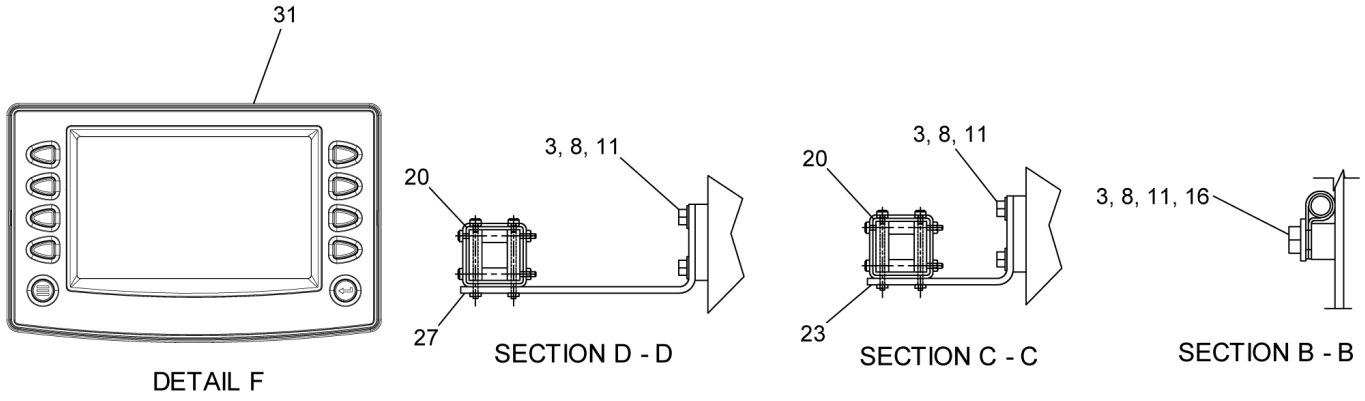

WHEN ORDERING PARTS, SPECIFY MODEL NUMBER, SERIAL NUMBER AND DESCRIPTION OF PARTS REQUIRED

REF	PART NO.	DESCRIPTION	QTY
	T122123 (Rev. J)	*RCL Assembly*	
1	SHF-250C750-25	SCR, HHCS FT 0.25-20 X 0.75, ST Z G5	6
2	T116674	Cable, 2 Conductor	24
3	SHF-375C750-25	SCR, HHCS FT 0.375-16 X 0.75, STZ G5	10
4*	SHF-500C750-25	SCR, HHCS FT 0.50-13 X 0.75, ST SQC G5	2
5	T141429	Jiffy Clip 5/16 DIA	1
6	SL5-190F500-20	SCR, CR RND MS 10-32 X 0.50, ST SQC	8
7	N04-250C000-25	Nut, HEX 0.25-20, ST SQC G5	6
8	WAW-37WX000-20	WSH, FL TYPA-WID 0.375, ST Z	10
9*	W07-500X000-20	WSH, LCK, MED SPLT 0.50, ST SQC	2
10	W07-250X000-20	WSH, LCK, MED SPLT 0.25, ST Z	6
11	W07-375X000-20	Washer Lock 3/8 MED	10
12	W08-190X000-20	WSH, LCK, HVY SPLT 10, ST SQC	8
13	VBB-125X400-L5	RVT, BTNHD, Blnd 0.125 X 0.400, AL	1
14	WAR-164X000-22	WSH, FL TYPA-REG 08, ST SQC G2	4
15	SL5-164C500-20	SCR, CR RND MS 8-32 X 0.500, ST SQC	4
16	200B2007-4	Clamp, MED, 1/2 ID	3
17	718 0677-123	Hose	1
18	206F4255	Tube 0.5 X 0.049 X 120, 501 Zinc Plated	1
19	442 6316	Grommet	1
20	707A4669	Guide, Roller	3
21	T127374	Base, Weidmuller	2
22	T127379	Hood, Weidmuller	2
23	709 7820	Bracket	2
24	714 0621	Switch	1
25	722 0031-103	Hose	1
26	**717-0778**	Reel (see page 202)	1
27	717 0808	Bracket	1
28	717 0882	Counterweight W/Chain ASSY	1
29	717 1198	Fuse, Velocity	1
30	T121904	Harness, RCL	1
31	T145829	Display, RCL	1
32	**T135335**	Computer, W/Data Recorderr (see page 204)	1
33*	1222-184	Plastic Tie	3
34	**T118425**	Horn Assembly, RCL (see page 205)	1
35	1211-8	Drive Screw	1
36	200B2007-59	Clamp	1
37	200B2007-6	Clamp	1
38	W07-312X000-20	WSH, LCK, MED SPLT 0.3125, ST SQC	2
39	N04-312C000-25	Nut, HEX 0.3125-18, ST Z GR5	2
40	T145830	Plate, Mounting	1

* ITEM NOT SHOWN IN ILLUSTRATION

WHEN ORDERING PARTS, SPECIFY MODEL NUMBER, SERIAL NUMBER AND DESCRIPTION OF PARTS REQUIRED

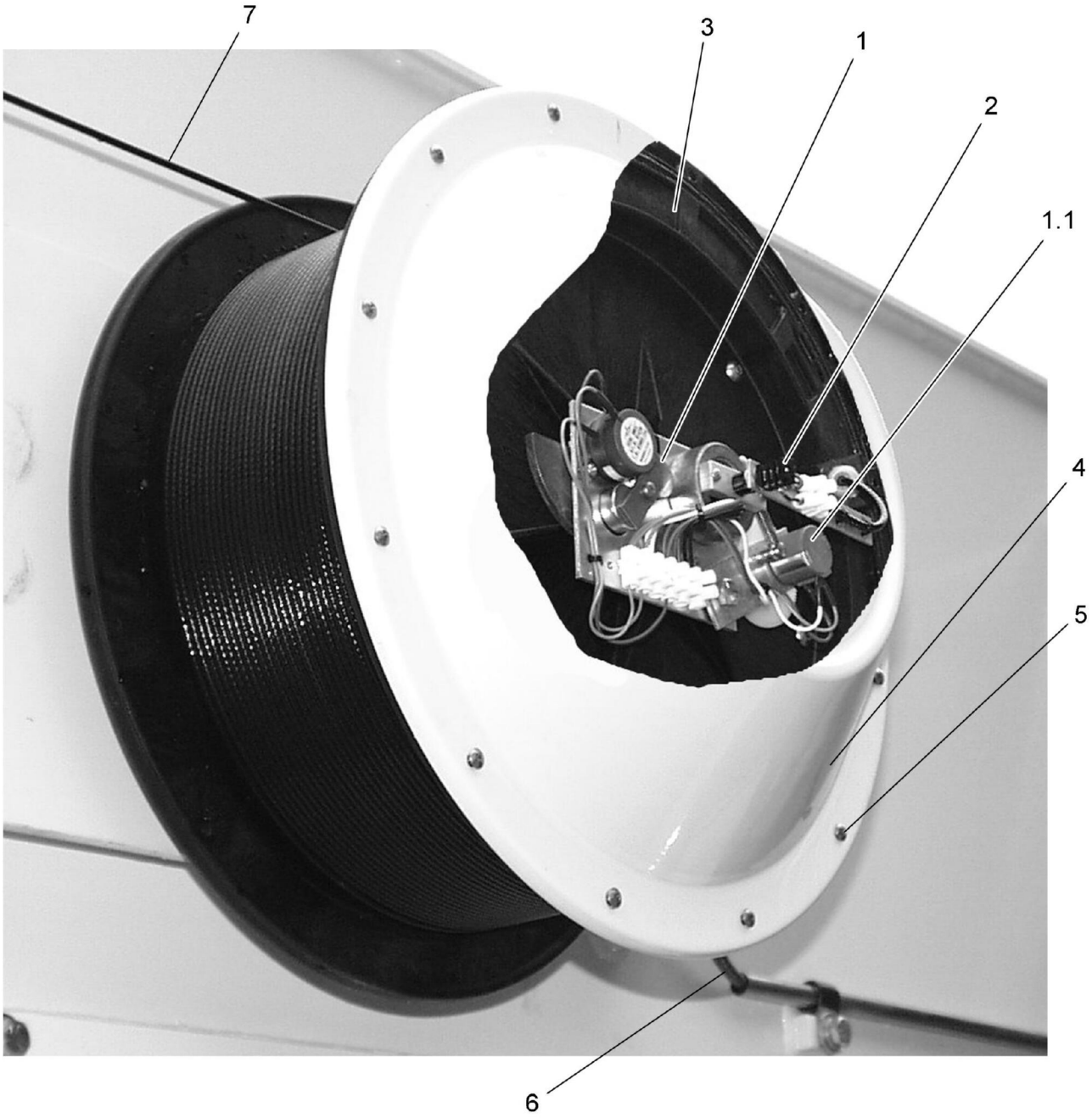
7
3
1
2
1.1
4
5
6

REF	PART NO.	DESCRIPTION	QTY
	717-0778 (Rev. 00)	*Reel*	
1	216651	Base Plate Assembly	1
1.1	216652	Potentiometer, Extension	1
1.2	216946	Potentiometer, Angle	REF
2	216653	Slip Ring	1
3	216654	O-Ring	1
4	216655	Cover Assembly	1
5	216656	Screw	12
6	216657	Cable, Tail	1
7	216658	EXT. Cable Assembly	1

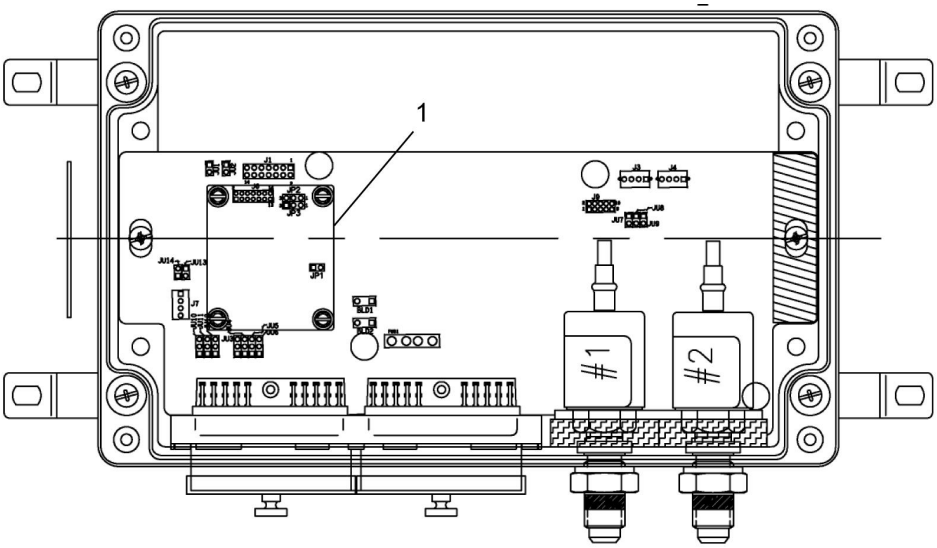

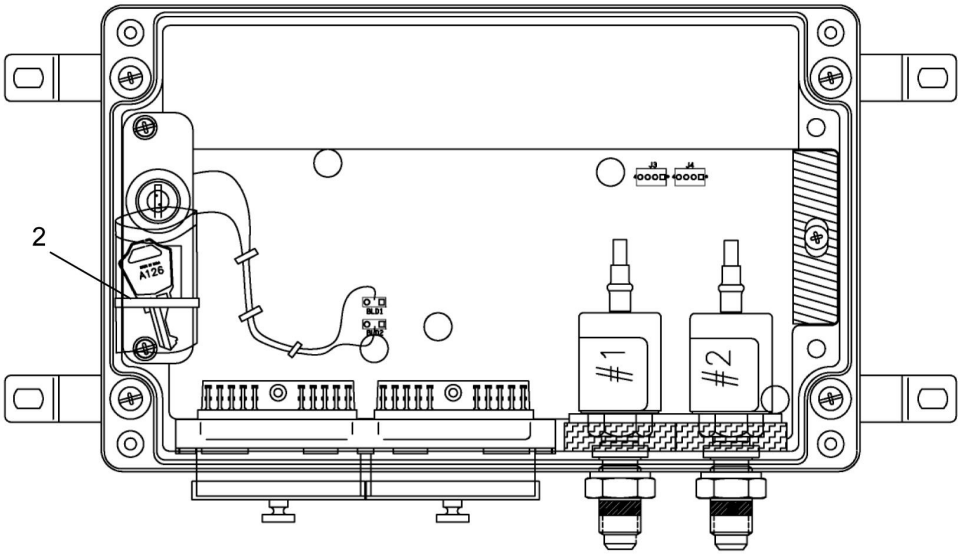

REF	PART NO.	DESCRIPTION	QTY
	T135335 (Rev. A)	*Computer, W/Data Recorderr*	
1	223284	PCB ASSY Daughter Card Can Dataloger 64K ATMEL	1
2	222417	Secure Bag of Keys	1

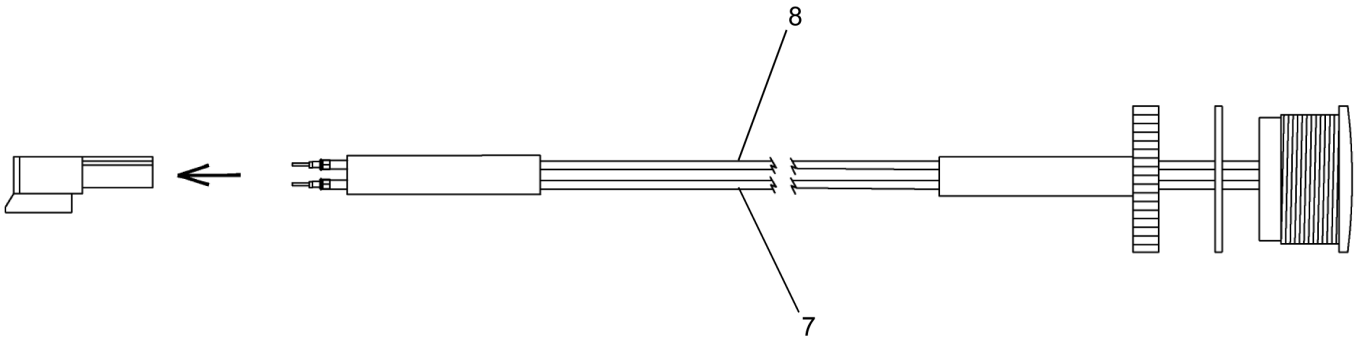
8
7

REF	PART NO.	DESCRIPTION	QTY
	T118425 (Rev. A)	*Horn Assembly, RCL*	
1*	223133	Horn Loud Tone 7VDC-15VDC, Floydbell SP-811A	1
2*	223134	Heatshrink Tubing 1/8"	9 IN
3*	223135	Heatshrink Tubing 1/4"	11 IN
4*	223136	Connector Receptacle DEUTSCH DTM04-2P Uses 223137 Terminal, P041458	1
5*	223137	Connector Secondary Lock 2-Way, DEUTSCH	1
6*	223138	Connector Terminal (M) 20-24 GA, DEUTSCH 0460-202-20141	2
7	223139	Wire 22AWG Black, PVC Hook-up Wire	14 IN
8	223140	Wire 22AWG Red, PVC Hook-up Wire	14 IN

* ITEM NOT SHOWN IN ILLUSTRATION

WHEN ORDERING PARTS, SPECIFY MODEL NUMBER, SERIAL NUMBER AND DESCRIPTION OF PARTS REQUIRED



Joy Stick- Right Hand

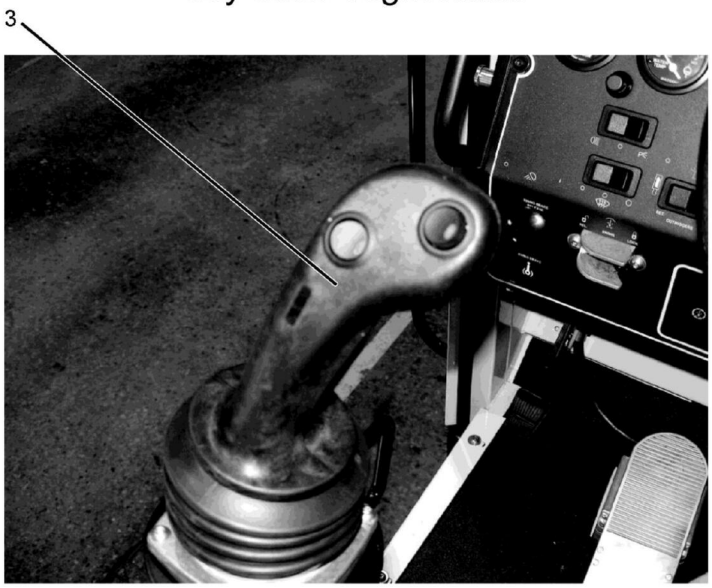

Joy Stick- Left Hand

REF	PART NO.	DESCRIPTION	QTY
	719A0920 (Rev. A)	*Single Lever-Duel Axis Joysticks Control*	
1*	**719-0919**	Single Lever Dual Axis Control Box (see page 208)	1
2	**719-0947**	Single Lever Dual Axis Joystick, Right (see page 209)	1
3	**719-0948**	Single Lever Dual Axis Joystick, Left (see page 211)	1

* ITEM NOT SHOWN IN ILLUSTRATION

WHEN ORDERING PARTS, SPECIFY MODEL NUMBER, SERIAL NUMBER AND DESCRIPTION OF PARTS REQUIRED

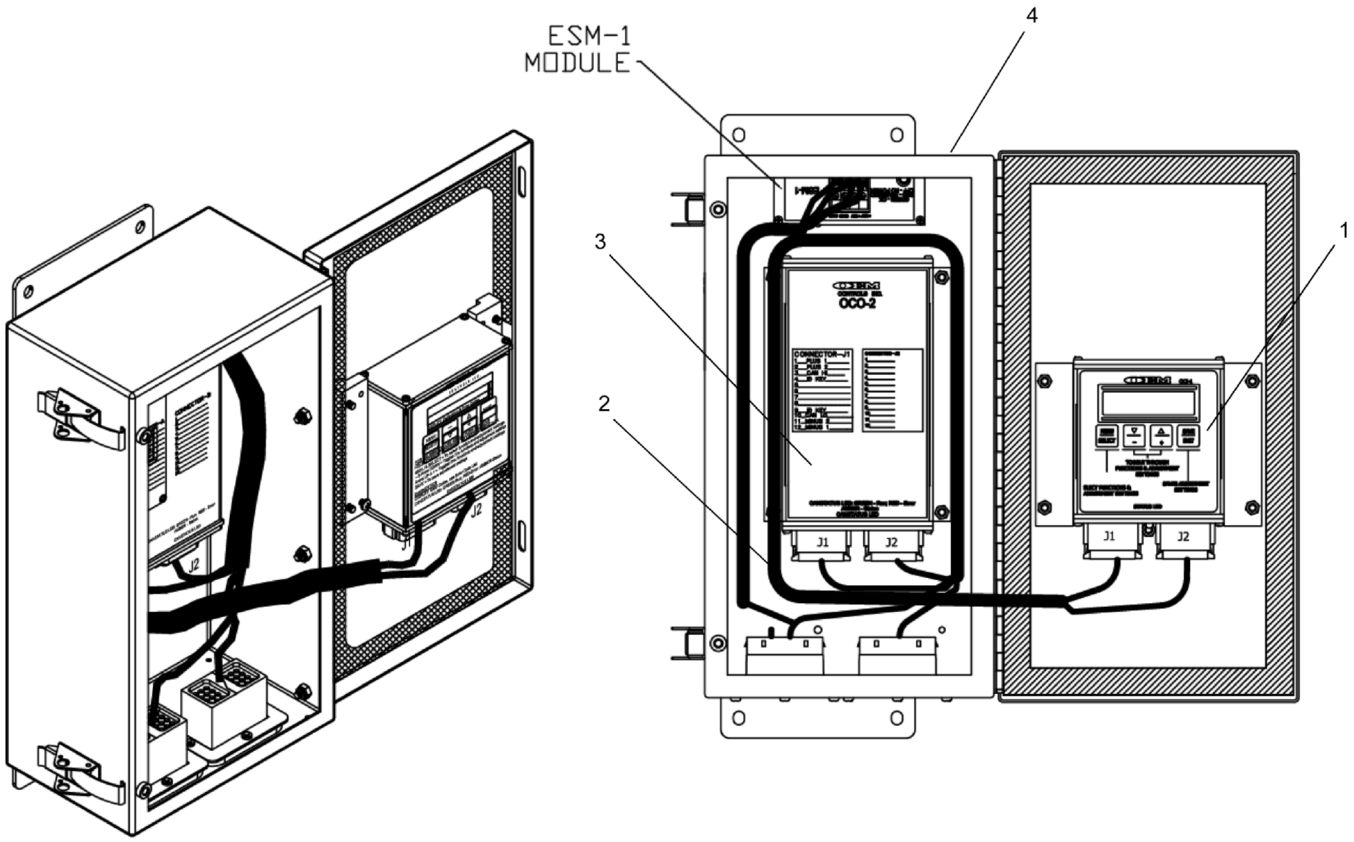

REF	PART NO.	DESCRIPTION	QTY
	719-0919 (Rev. 00)	*Single Lever Dual Axis Control Box*	
1	219995	OEMCAN Input Module	1
2	219994	Wire Harness W/Connectors	1
3	219993	OEMCAN Output Module	1
4	219991	Enclosure	1

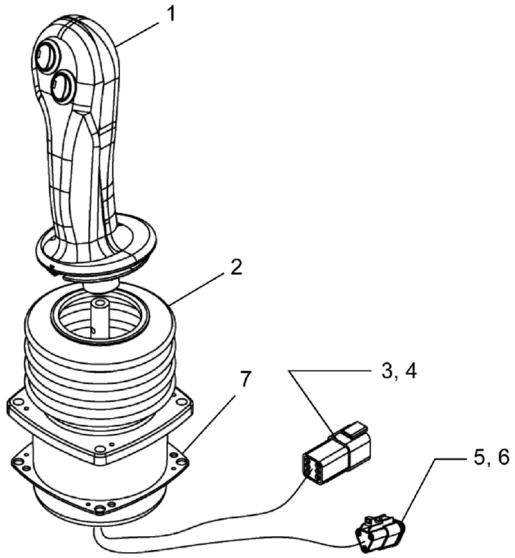

RIGHT ARM ASSEMBLY - DOUBLE AXIS

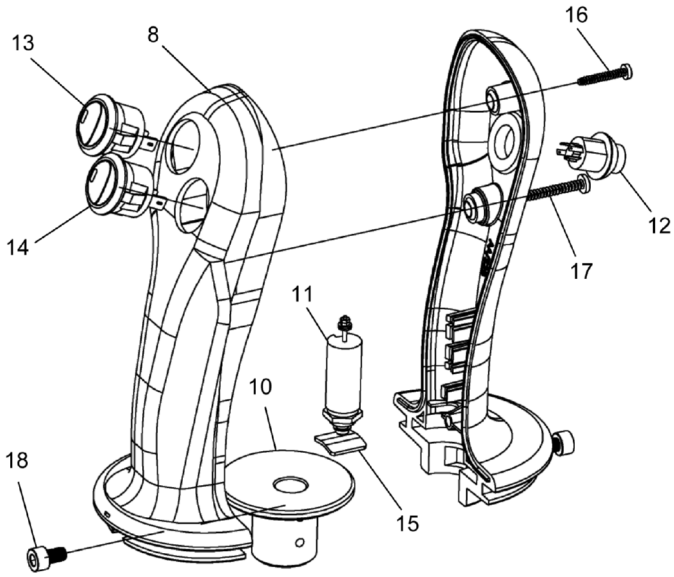

HANDLE ASSEMBLY

REF	PART NO.	DESCRIPTION	QTY
	719-0947 (Rev. 00)	*Single Lever Dual Axis Joystick, Right*	
1	220630	Handle Assembly (Includes Items 8 to 18)	1
2	219784	Boot	1
3	220631	Connector	1
4	220632	Wedge	1
5	220633	Connector	1
6	220634	Wedge	1
7	220635	Gasket	1
8	220636	Handle	1
9*	220637	Handle	1
10	220638	Coupling	1
11	219978	Solenoid	1
12	218890	Otto SW	1
13	220639	Red Rocker	1
14	220640	Green Rocker	1
15	220641	Thumper Light	1
16	220642	Screw	1
17	220643	Screw	1
18	220644	Screw	2

* ITEM NOT SHOWN IN ILLUSTRATION

WHEN ORDERING PARTS, SPECIFY MODEL NUMBER, SERIAL NUMBER AND DESCRIPTION OF PARTS REQUIRED

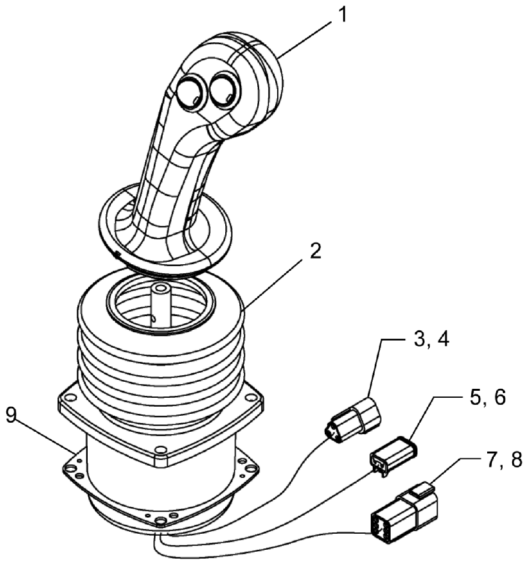

LEFT ARM ASSEMBLY - DOUBLE AXIS

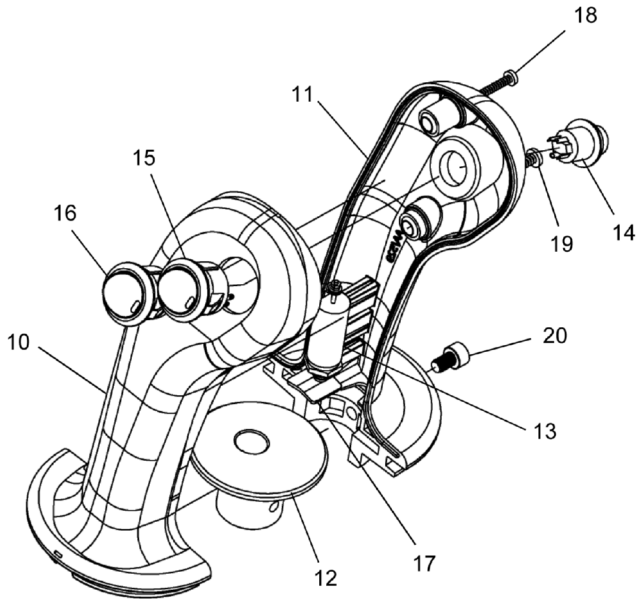

HANDLE ASSEMBLY

REF	PART NO.	DESCRIPTION	QTY
	719-0948 (Rev. 00)	*Single Lever Dual Axis Joystick, Left*	
1	220645	Handle Assembly (Includes Items 10 to 20)	1
2	219784	Boot	1
3	220646	Connector	1
4	220647	Wedge	1
5	220648	Connector	1
6	220649	Wedge	1
7	220631	Connector	1
8	220632	Wedge	1
9	220635	Gasket	1
10	220650	Handle	1
11	220651	Handle	1
12	220638	Coupling	1
13	219978	Solenoid	1
14	218890	Otto SW	1
15	220639	Red Rocker	1
16	220640	Green Rocker	1
17	220641	Thumper Light	1
18	220642	Screw	1
19	220643	Screw	1
20	220644	Screw	2



Joy Stick- Right Hand

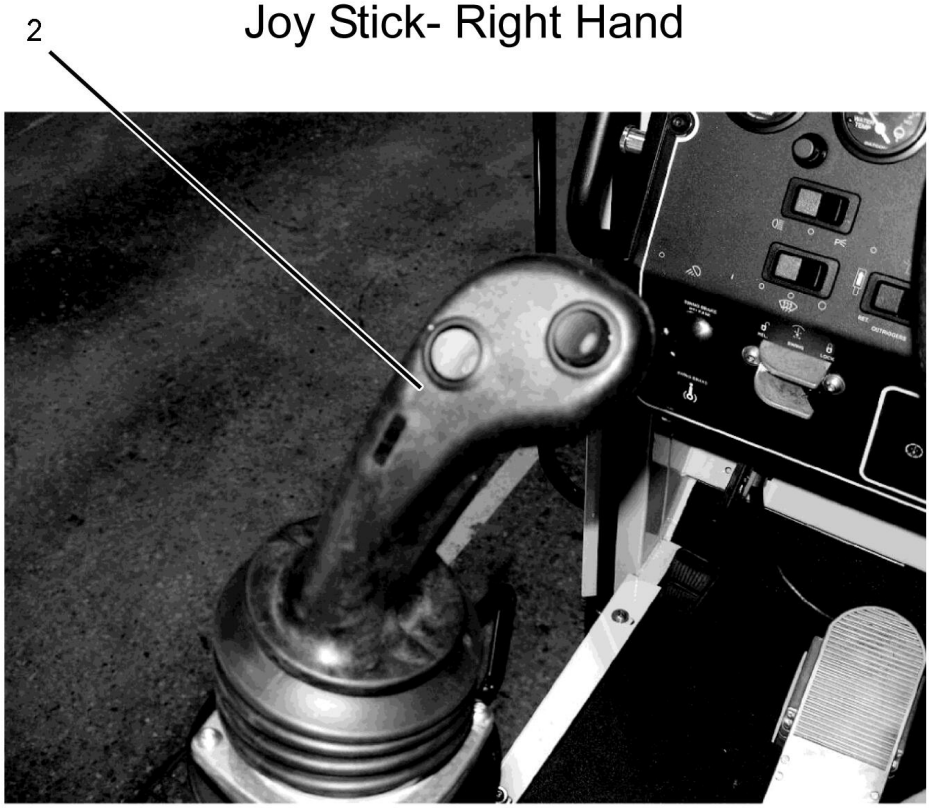

Joy Stick- Left Hand

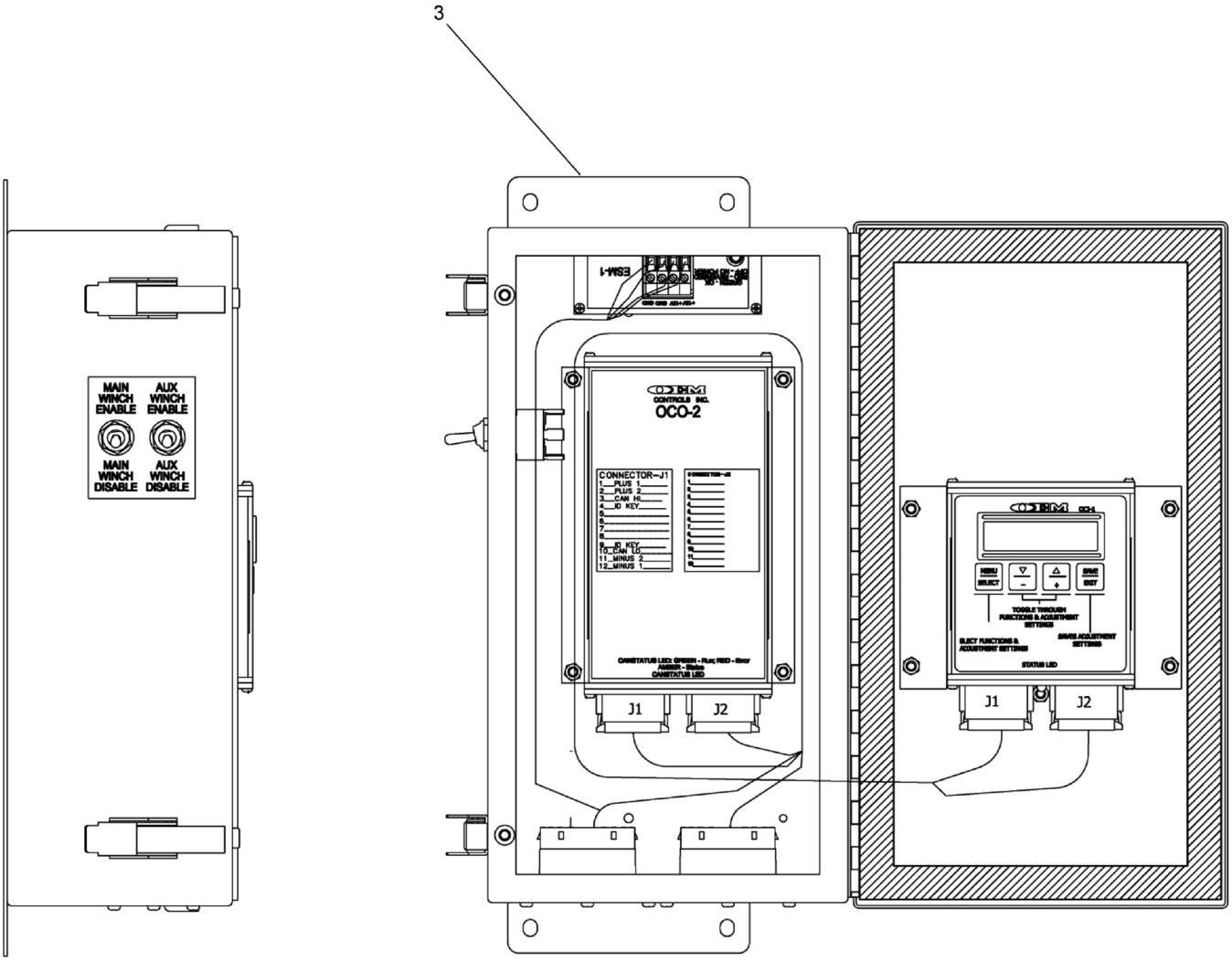
3
MAIN WINCH ENABLE
AUX WINCH ENABLE
MAIN WINCH DISABLE
AUX WINCH DISABLE
OCO-2
CONNECTOR-J1
J1
J2

REF	PART NO.	DESCRIPTION	QTY
	719A0921 (Rev. A)	*Dual Lever-Single Axis Joysticks Control*	
1	**719-0922**	Dual Lever Single Axis Joystick, Right (see page 216)	1
2	**719-0923**	Dual Lever Single Axis Joystick, Left (see page 218)	1
3	719-0924	Control Box, Dual Lever-Single Axis	1

* ITEM NOT SHOWN IN ILLUSTRATION

WHEN ORDERING PARTS, SPECIFY MODEL NUMBER, SERIAL NUMBER AND DESCRIPTION OF PARTS REQUIRED

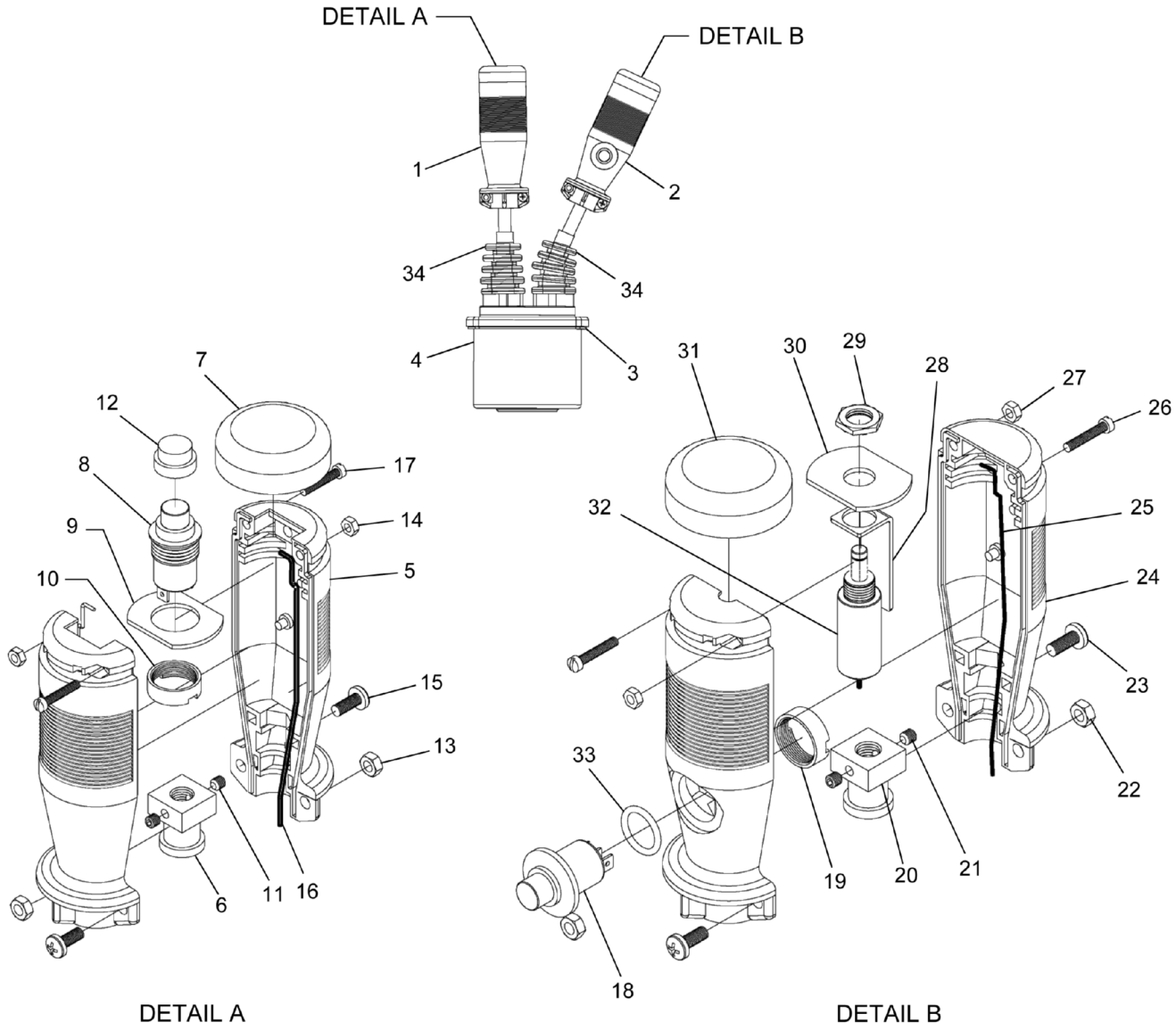
DETAIL A
DETAIL B
1
2
34
34
4
3
7
12
8
17
9
14
10
5
15
13
6
11
16
31
30
29
28
27
26
32
25
24
23
33
22
19
20
21
18
DETAIL A
DETAIL B

REF	PART NO.	DESCRIPTION	QTY
	719-0922 (Rev. 00)	*Dual Lever Single Axis Joystick, Right*	
	228654	Handle Assembly (Includes Items 5 thru 17)	1
1	220652	Handle ASSY	1
2	220653	Handle ASSY (Includes Items 18 thru 33)	1
3	220635	Gasket	1
4	220654	Can	1
5	220660	Handle	2
6	220655	Coupling	1
7	220663	Boot	1
8	220665	Push Button	1
9	220666	Disc Top Push Button	1
10	220667	Push Button Nut	1
11	220656	Set Screw	2
12	220664	P.B. Knob	1
13	220658	Nut	2
14	220661	Nut	2
15	220659	Screw	2
16	220657	Gasket	2
17	220662	Screw	2
18	220665	Push Button	1
19	220667	Push Button Nut	1
20	220655	Coupling	1
21	220656	Set Screw	2
22	220658	Nut	2
23	220659	Screw	2
24	220668	Handle Set	2
25	220657	Gasket	2
26	220662	Screw	2
27	220661	Nut	2
28	220669	Thumper Bracket	1
29	220670	Nut	1
30	220671	Plate	1
31	220663	Boot	1
32	219978	Solenoid	1
33	220672	O Ring	2
34	229727	Boot	2

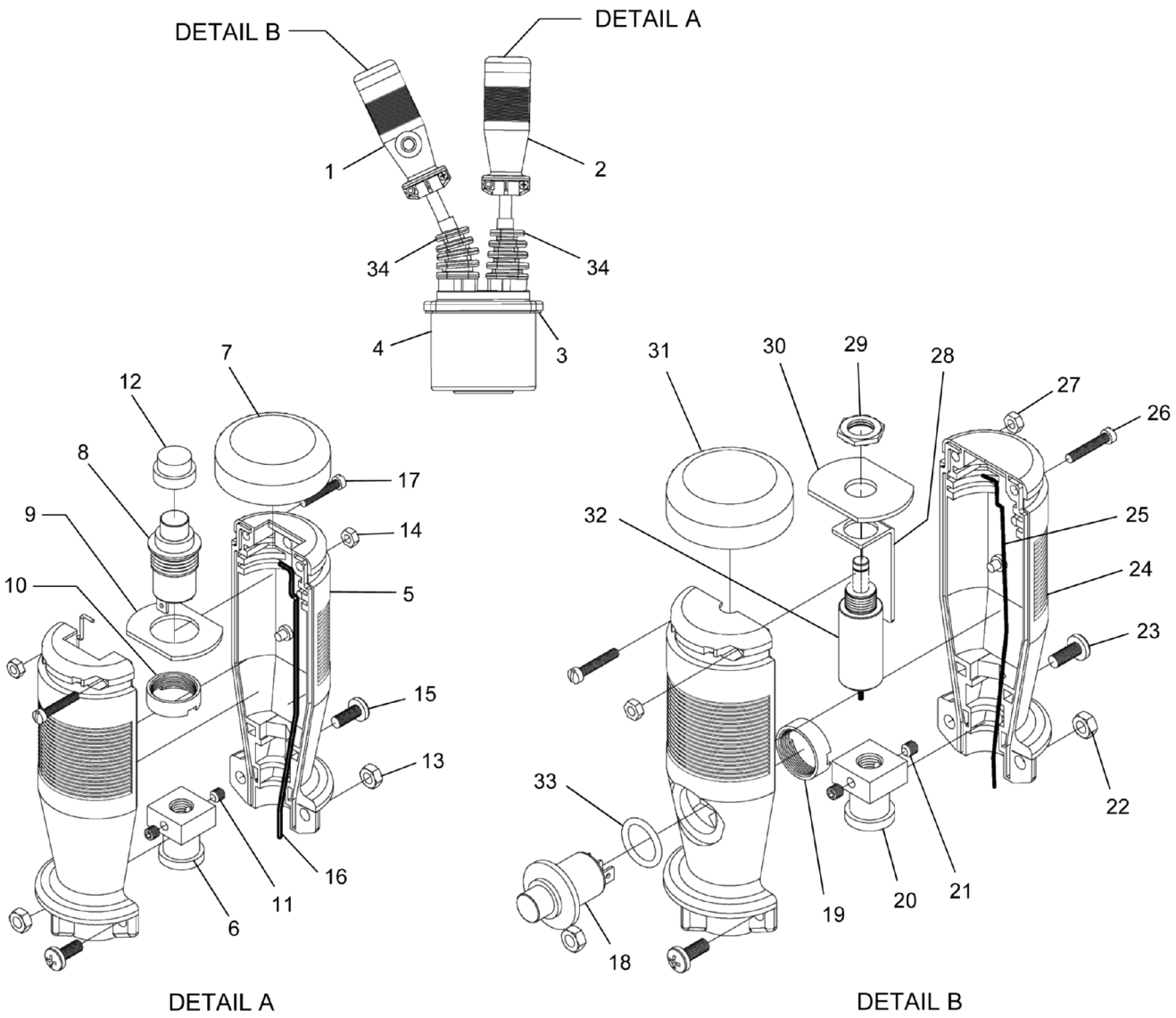
DETAIL B
DETAIL A
1
2
34
34
4
3
7
12
8
9
10
17
14
5
15
13
16
11
6
31
30
29
28
27
26
25
24
23
22
32
33
19
20
21
18
DETAIL A
DETAIL B

REF	PART NO.	DESCRIPTION	QTY
	719-0923 (Rev. 00)	*Dual Lever Single Axis Joystick, Left*	
	230974	Handle Assembly (Includes Items 18 thru 33)	1
1	220652	Handle ASSY (Includes Items 5 thru 17)	1
2	220653	Handle ASSY	1
3	220635	Gasket	1
4	220654	Can	1
5	220660	Handle	2
6	220655	Coupling	1
7	220663	Boot	1
8	220665	Push Button	1
9	220666	Disc Top Push Button	1
10	220667	Push Button Nut	1
11	220656	Set Screw	2
12	220664	P.B. Knob	1
13	220658	Nut	2
14	220661	Nut	2
15	220659	Screw	2
16	220657	Gasket	2
17	220662	Screw	2
18	220665	Push Button	1
19	220667	Push Button Nut	1
20	220655	Coupling	1
21	220656	Set Screw	2
22	220658	Nut	2
23	220659	Screw	2
24	220668	Handle Set	2
25	220657	Gasket	2
26	220662	Screw	2
27	220661	Nut	2
28	220669	Thumper Bracket	1
29	220670	Nut	1
30	220671	Plate	1
31	220663	Boot	1
32	219978	Solenoid	1
33	220672	O Ring	2
34	229727	Boot	2

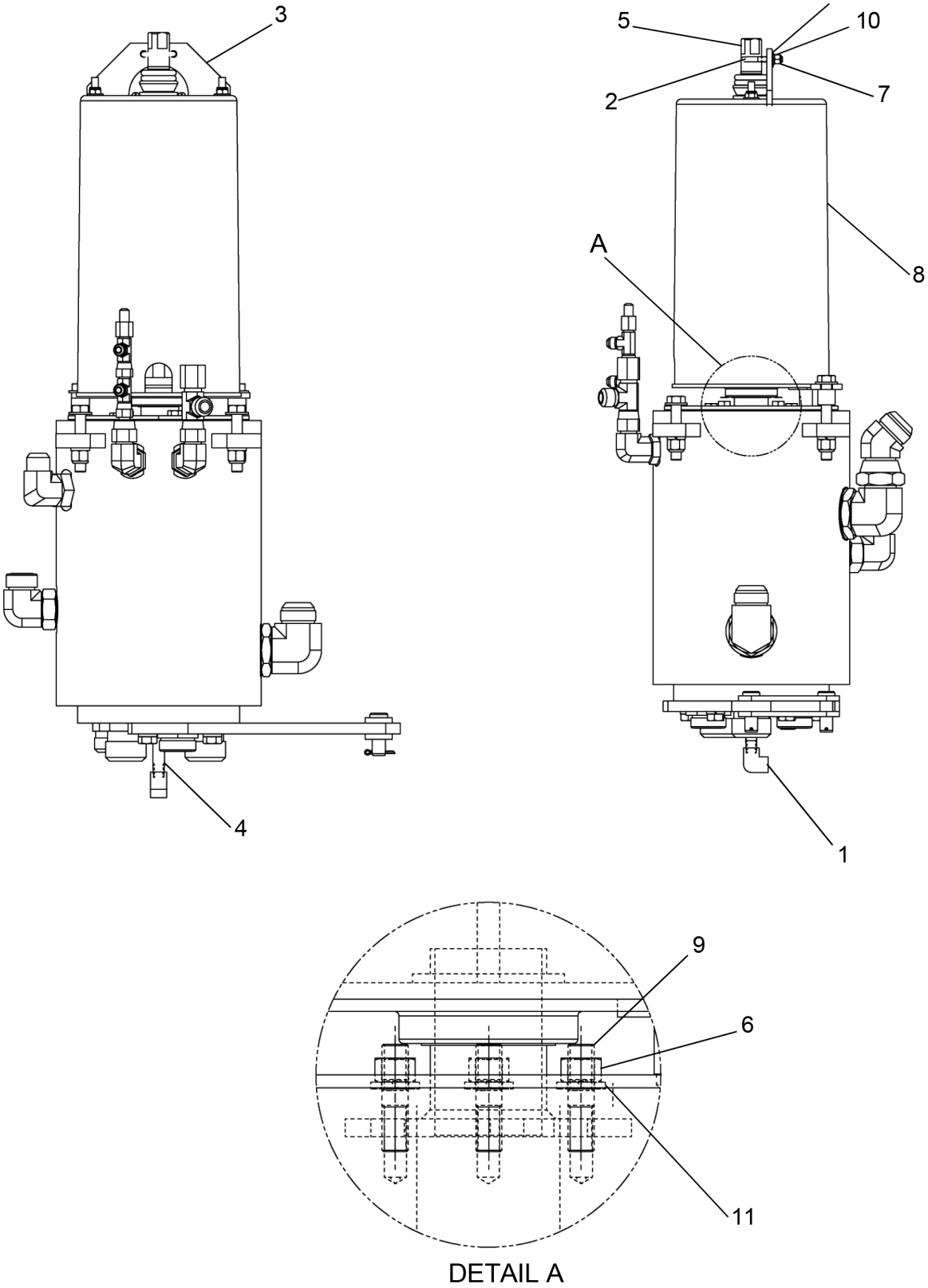

DETAIL A

WHEN ORDERING PARTS, SPECIFY MODEL NUMBER, SERIAL NUMBER AND DESCRIPTION OF PARTS REQUIRED

LOAD KING BY CUSTOM TRUCK ONE SOURCE

COLLECTOR RING 38 PASS

DATE: Released 08-2018

MODEL: 480-126

PAGE: 220

CHAPTER 1

REF	PART NO.	DESCRIPTION	QTY
	T122390 (Rev. B)	*38 Pass COLL Ring Assembly*	
1	12019-465	Elbow, 90°, 0.25 NPT	1
2	718-0790	U-Bolt	1
3	718-0792	Bracket, Top, COLL Ring	1
4	718-0794	Nipple, EXT LNG, 0.25 GALV Pipe	1
5	718-0938	Air Swivel	1
6	N04-375C000-25	Nut, HEX 0.375- 16, ST Z GR5	3
7	NYL-250C000-25	Nut, HEX NYL-INS 0.25-20, ST Z G5	2
8	**T122390-Slip Ring**	Slip Ring, 38 Circuit (see page 222)	1
9	TSD-375CA50-BX	Stud, DBLTHRD 0.375-16 X 1.50, ST BX	3
10	W07-250X000-20	WSH, LCK, MED SPLT 0.25, ST Z	2
11	W07-375X000-20	Washer Lock 3/8 MED	3
12	WBR-25RX734-20	WSH, FL TYPB-REG 0.25, ST Z	2

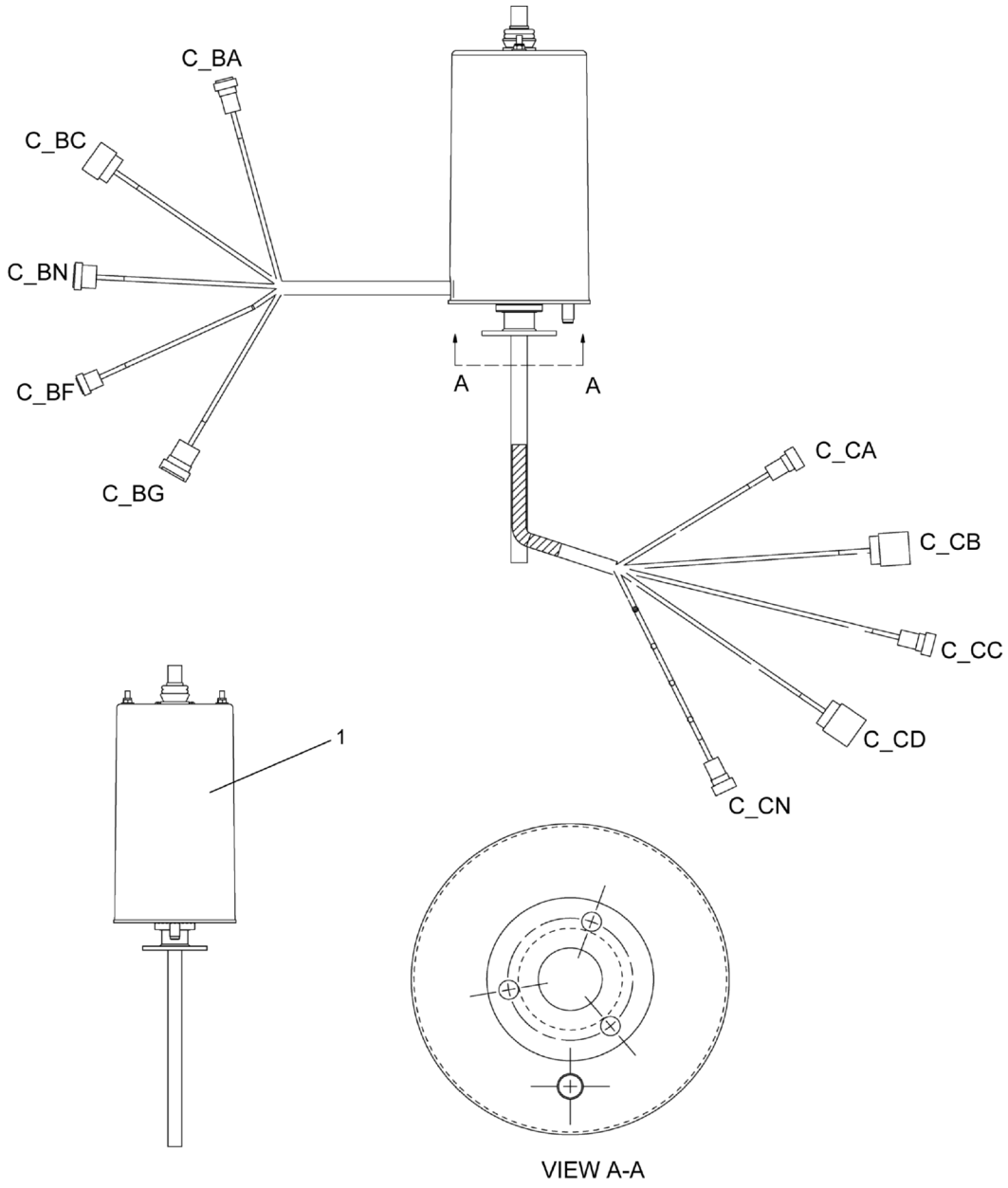

REF	PART NO.	DESCRIPTION	QTY
	T122390-Slip Ring (Rev. 00)	*Slip Ring, 38 Circuit*	
1	T125650	Slip Ring, 38 Circuit	1

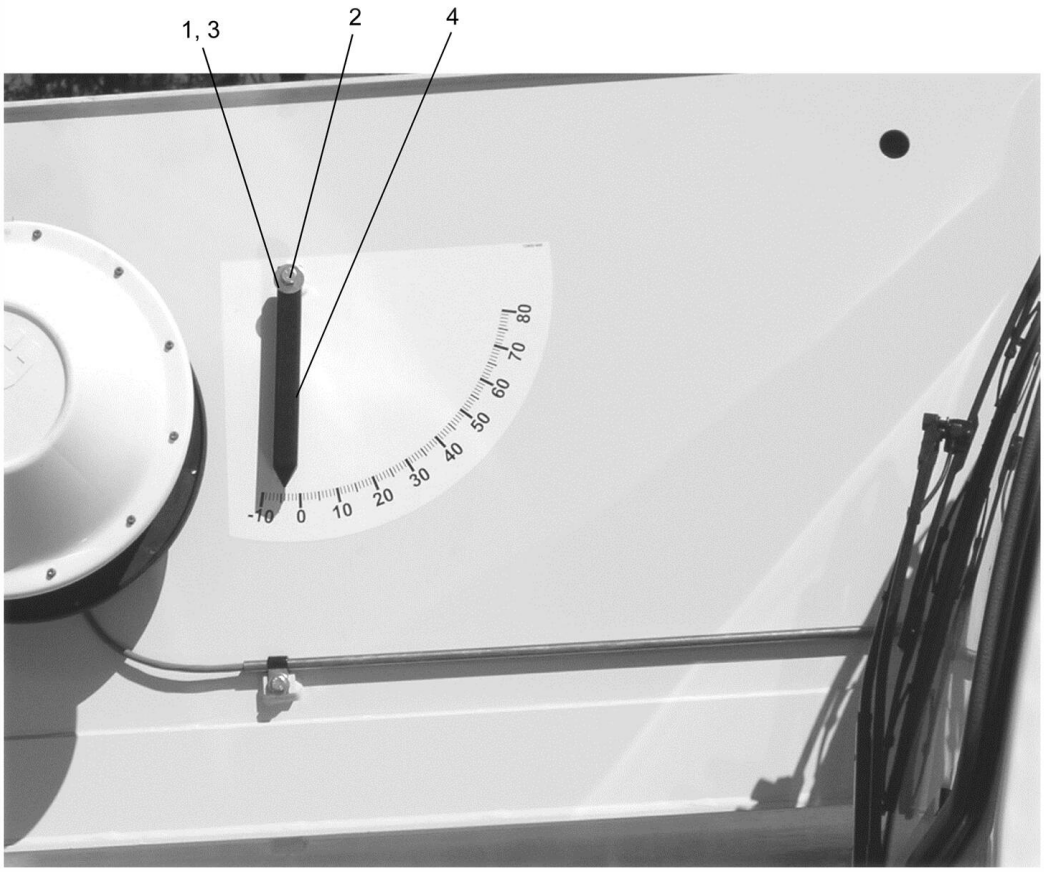

REF	PART NO.	DESCRIPTION	QTY
	710A0644 (Rev. 00)	*Boom Angle Indicator Assembly*	
1	1200-328	HHCS 7/16-14X 11/4GR5 ZIN	1
2	1205-47	Nut, HEX, 7/16-14 GR2	2
3	1209-5	Washer, Flat, 7/16 Type A	2
4	729-02578	Pointer	1

CHAPTER NO. 2

480-126-2017 LOWER STRUCTURE

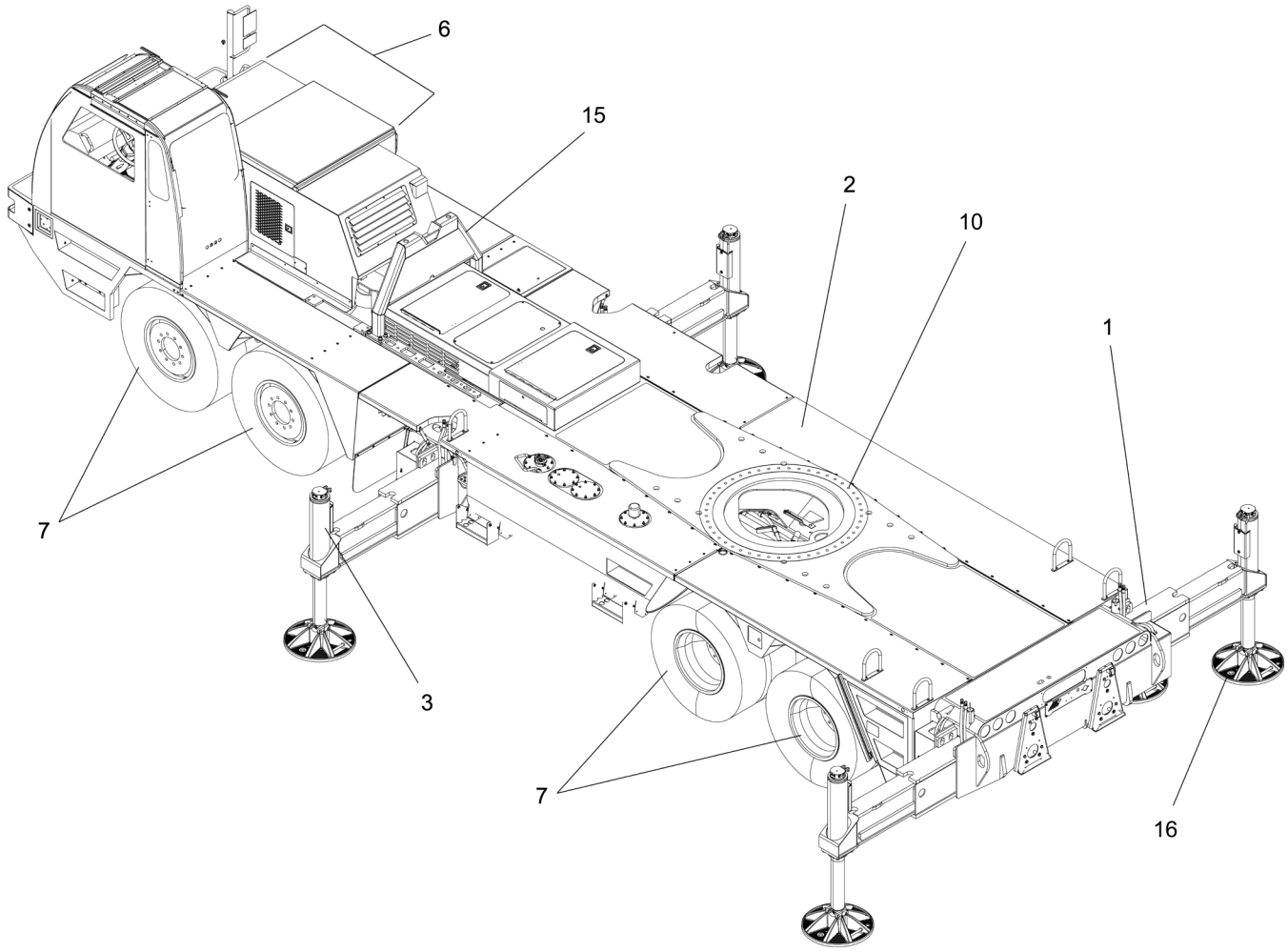
6
15
2
10
1
7
3
7
16

REF	PART NO.	DESCRIPTION	QTY
	480-126-2017-LWR-STR* (Rev. 00)	*480-126-2017 LOWER STRUCTURE*	
1	**T136617**	Frame/Bearing/Anti-Slip Tape (see page 229)	1
2	**T154207**	Decking & Housing Assembly (see page 232)	1
3	**T121257**	Outrigger Assembly (see page 240)	1
4**	**717A0390**	Front Jack Assembly (see page 254)	1
5**	**T121258**	Outrigger Sensor Assembly (see page 259)	1
6	**480-126-2017-ENGINES***	T7-2017 Engine Options (see page 260)	REF
7	**480-126-2017-WHEEL &**	480-126-2017 Wheel & Tire (see page 414)	REF
8**	**TIRE* T153911**	Air Components Assembly, 2017 (see page 419)	1
9**	**T103931-2**	Air COMP. Boom DOLLY (see page 425)	1
10	**718A0462**	Swing Bearing Assembly (see page 427)	1
11**	**T134320**	Lower Hydraulic ASSY T7 (see page 429)	1
12**	**T156230**	Lower Electrical GP, T 7-2017 (see page 447)	1
13**	**722A0194**	Front Suspension Assembly (see page 449)	1
14**	**T136444**	T7 Drive Shaft Assembly (see page 473)	1
15	**722A0247**	Boom Rack Assembly (see page 479)	1
16	**718A0805**	Outrigger Pad Assembly (see page 480)	1

* NOT PURCHASABLE AT THIS LEVEL
** ITEM NOT SHOWN IN ILLUSTRATION.

WHEN ORDERING PARTS, SPECIFY MODEL NUMBER, SERIAL NUMBER AND DESCRIPTION OF PARTS REQUIRED

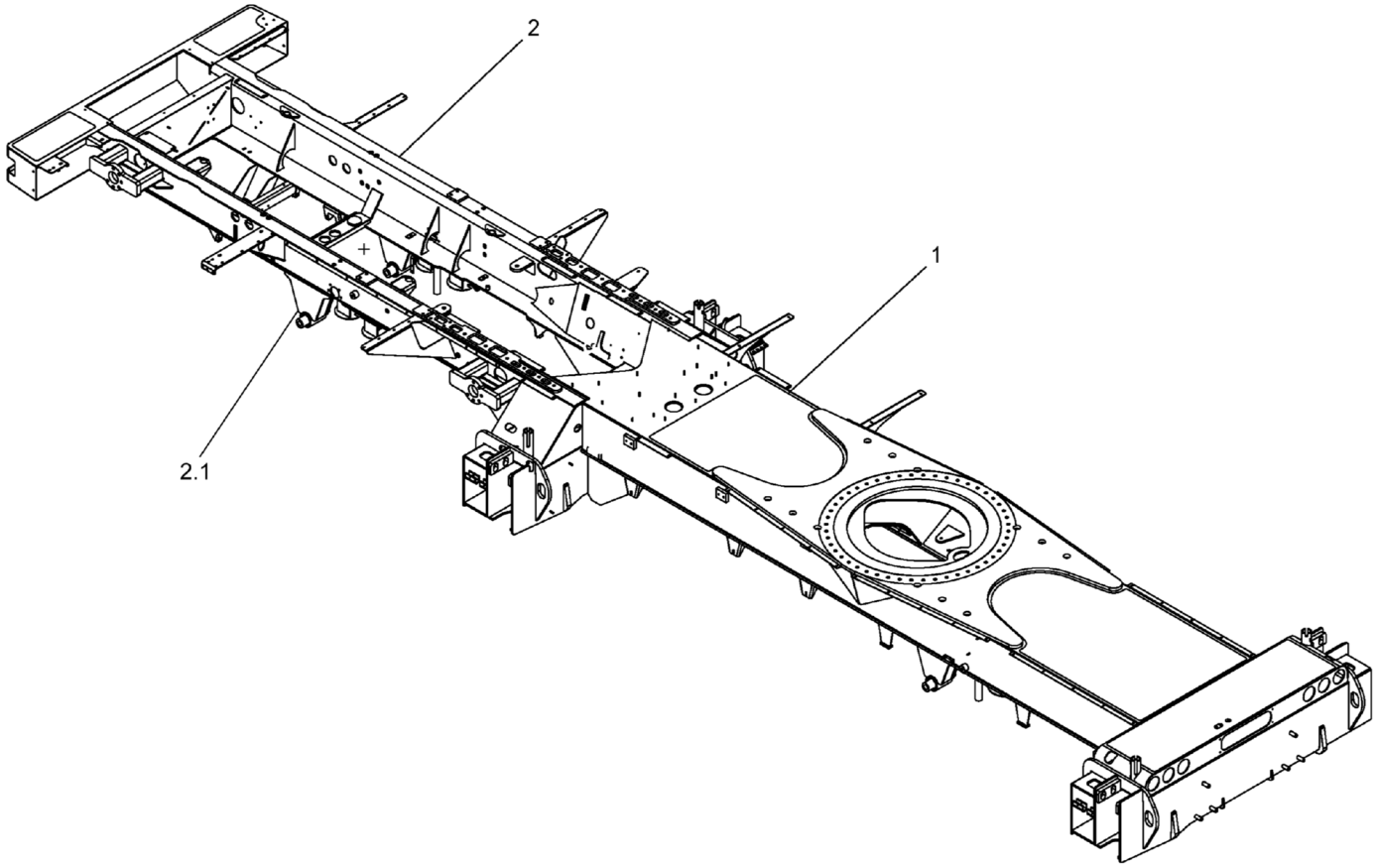

REF	PART NO.	DESCRIPTION	QTY
	T136617 (Rev. H)	*Frame/Bearing/Anti-Slip Tape*	
1	**717A0726**	Anti-Slip Tape Assembly (see page 230)	1
2	T132736	Frame Weldment	1
2.1	**718-0703**	Upper Steel Kit (see page 231)	1

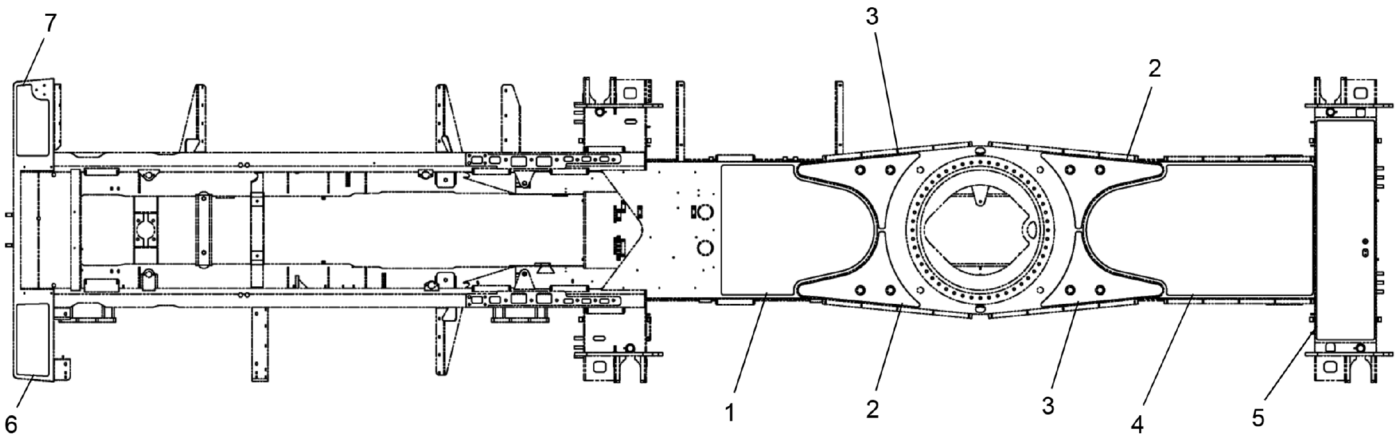

REF	PART NO.	DESCRIPTION	QTY
	717A0726 (Rev. D)	*Anti-Slip Tape Assembly*	
1	717-0727	Anti-Slip Tape	1
2	717-0728	Anti-Slip Tape	2
3	717-0729	Anti-Slip Tape	2
4	717-0731	Anti-Slip Tape	1
5	717-0732	Anti-Slip Tape	1
6	717-0733	Anti-Slip Tape	1
7	717-0990	Anti-Slip Tape	1

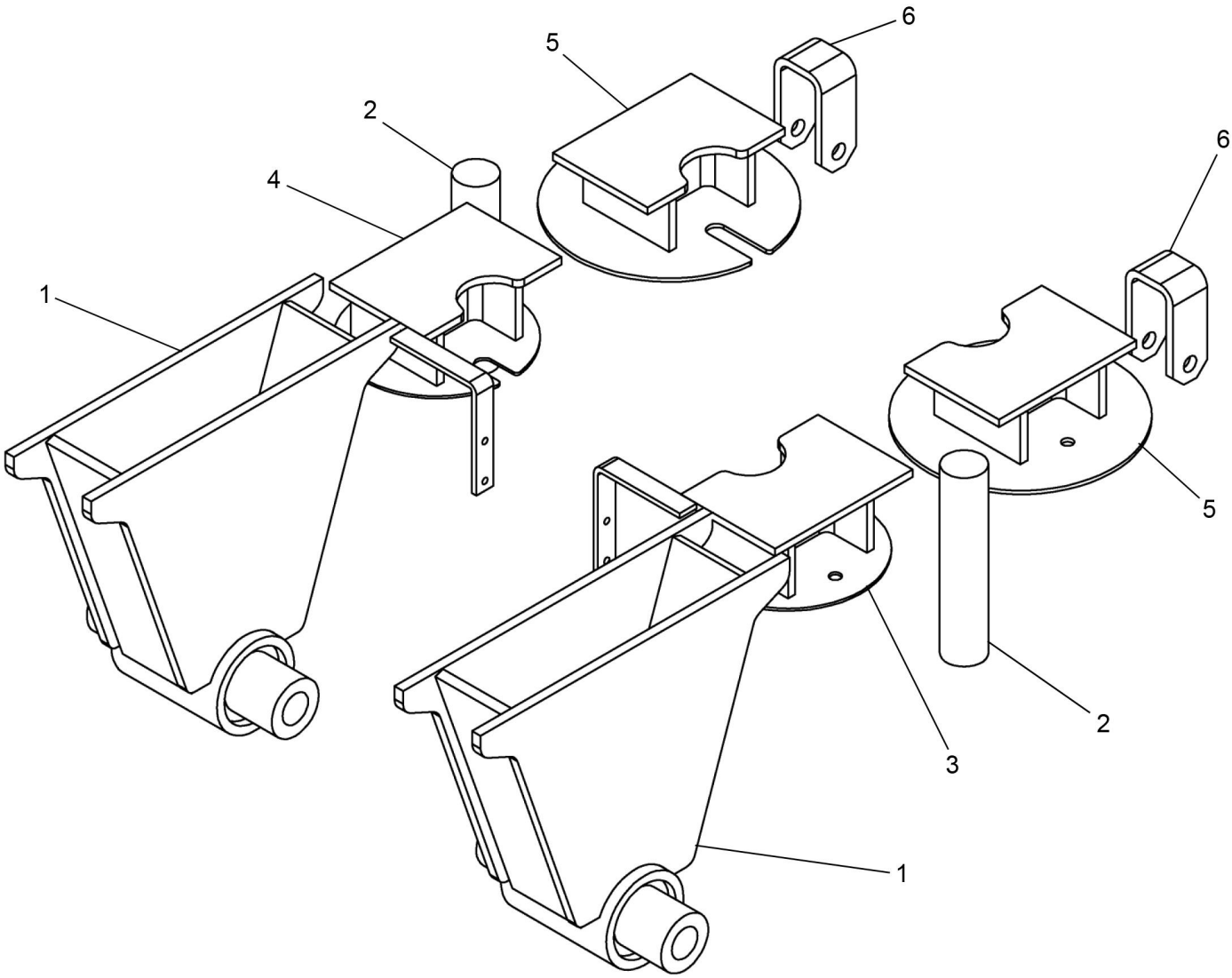

REF	PART NO.	DESCRIPTION	QTY
	718-0703 (Rev. B)	*Upper Steel Kit*	
1	718 0937	Tower	2
2	717 1162	Stop Post	2
3	718 0933	Hanger Air - Left	1
4	718 0934	Hanger Air - Right	1
5	718 0935	Hanger Air	2
6	718 0936	Bracket - Stop	2

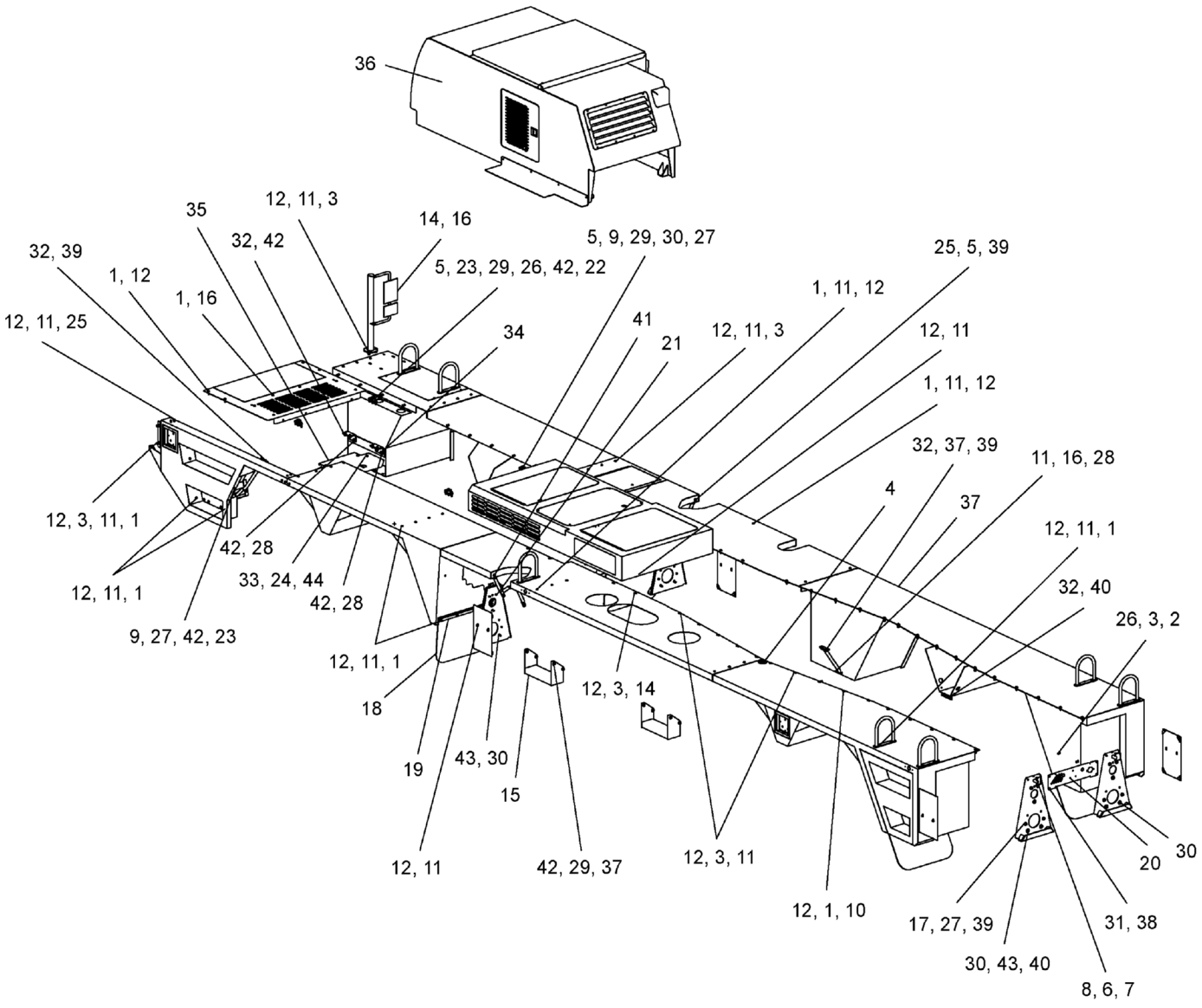
36
35
12, 11, 3
14, 16
32, 39
32, 42
5, 9, 29, 30, 27
25, 5, 39
1, 12
5, 23, 29, 26, 42, 22
1, 11, 12
1, 16
41
12, 11, 3
12, 11
12, 11, 25
34
21
1, 11, 12
32, 37, 39
11, 16, 28
4
37
12, 3, 11, 1
12, 11, 1
42, 28
32, 40
12, 11, 1
33, 24, 44
26, 3, 2
42, 28
9, 27, 42, 23
12, 11, 1
18
12, 3, 14
19
43, 30
15
30
20
12, 11
42, 29, 37
12, 3, 11
12, 1, 10
17, 27, 39
31, 38
30, 43, 40
8, 6, 7

REF	PART NO.	DESCRIPTION	QTY
	T154207 (Rev. A)	*Decking & Housing Assembly*	
1	1203-255	Screw, Button Head, TORX	148
2	1204-34	5/16 HEX Flange Nut	12
3	1209-24	5/16 Fender Washer	10
4	1221-122	Hole Plug 2 1/2	1
5	1221-125	Mount	4
6	12219-17	Cable 7 X 7 Aircraft Plastic	4
7	1222-225	1/8 Cable Sleeve	8
8	1222-339	5/16 Saftey Snap Pin	4
9	1240-29	Clamp P, 1.125 DIA	1
10	209-00873-10	U-Spring Nut	30
11	340-2119	Nut, HEX, K-Lock 0.3125-18, ST Z	165
12	380-1801	WSH, FNDR 0.312 X 2.00, SS18-8	329
13*	464-1113	Foam Tape, Self-AD 1.25" X 3/16"	3
14	708-8352	Mirror R.H.	1
15	712F0068	Step	2
16	714-0527	Hardware Kit, Non Pre-Set	1
17	714-0770	Bumper, Rubber	16
18	717-0585	Mud Flap	4
19	717-0586	Bar	4
20	717-0819	Cover Rear Frame	1
21	N04-250C000-25	Nut, HEX 0.25-20, ST SQC G5	16
22	NYL-312C000-25	Nut, HEX NYL-INS 0.312-18, ST SQC G5	8
23	NYL-375C000-25	Nut, HEX NYL-INS 0.375-16, ST SQC G5	13
24	NYM-10CM000-41	Nut, NYL-INS M10-1.5, STZ C8	2
25	S01-312CA00-25	Capscrew, .31C X 1.00	30
26	S01-312CA25-25	SCR, HHCS 0.3125-18 X 1.25, ST Z G5	14
27	S01-375CA25-25	SCR, HHCS 0.375-16 X 1.25, ST Z GR5	1
28	S01-375CA50-25	SCR, HHCS 0.375-16 X 1.50, ST Z GR5	4
29	S01-375CB25-25	SCR, HHCS 0.375-16 X 2.25, ST Z GR5	4
30	S01-438CA25-25	SCR, HHCS 0.4375-14 X 1.25, ST Z G5	12
31	SHF-250C750-25	SCR, HHCS FT 0.25-20 X 0.75, ST Z G5	4
32	SHF-375CA00-25	HHCS 3/8 NC X 1 GR5 Zinc	26
33	SMF-10CM030-28	SCR, HHCS M10-1.5 X 30 FT, ST Z 8.8	2
34	T113709	Plate, Nut	2
35	T148108	Baffle	1
36	**T153916**	Housing, Engine, ASSY (see page 234)	1
37	**T154208**	Decking Assembly, T 7-2017 (see page 238)	1
38	W07-250X000-20	WSH, LCK, MED SPLT 0.25, ST Z	20
39	W07-375X000-20	Washer Lock 3/8 MED	8
40	W07-438X000-20	WSH, LCK MED SPLT 0.4375, ST Z	12
41	WAW-31WX000-20	WSH, FL TYPA-WID 0.3125, ST SQC	10
42	WAW-37WX000-20	WSH, FL TYPA-WID 0.375, ST Z	44
43	WAW-43WX000-20	WSH, FL TYPA-WID 0.4375, ST Z	12
44	WMF-010X000-20	WSH, Flat M10 DIN125, ST SQC	2

* ITEM NOT SHOWN IN ILLUSTRATION

WHEN ORDERING PARTS, SPECIFY MODEL NUMBER, SERIAL NUMBER AND DESCRIPTION OF PARTS REQUIRED

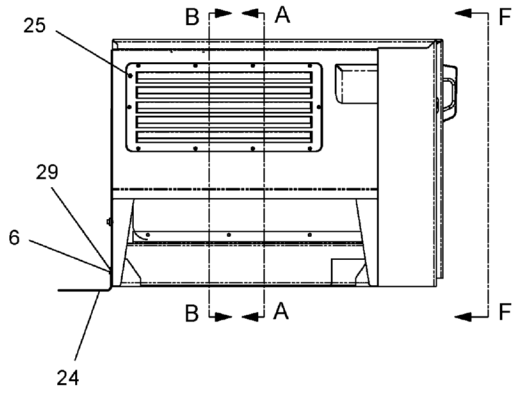

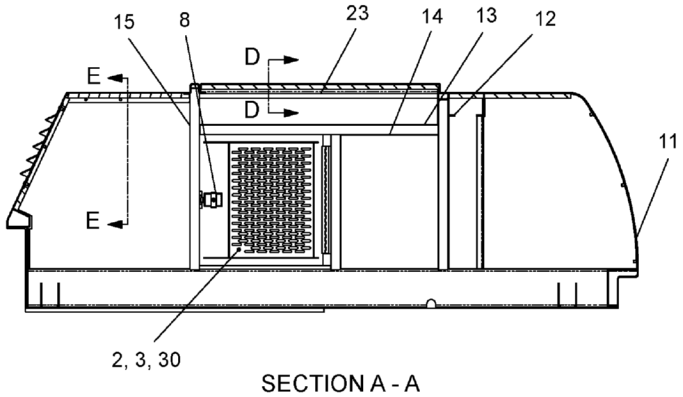

SECTION A - A

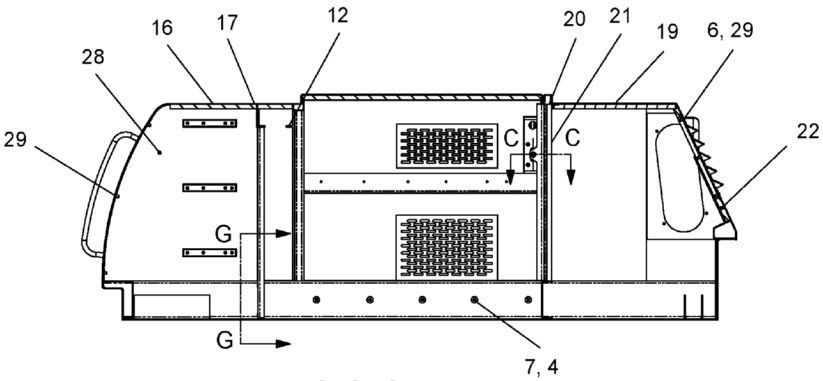

SECTION B - B

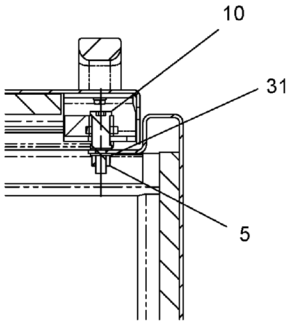

SECTION C - C

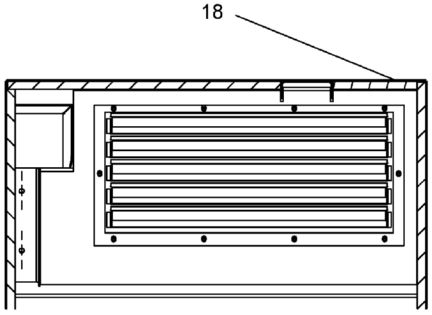

SECTION E - E

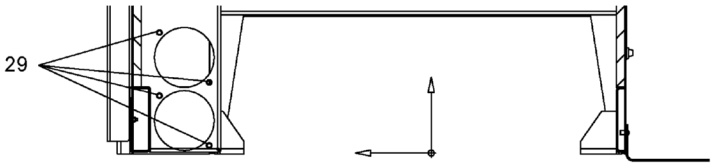

SECTION G - G

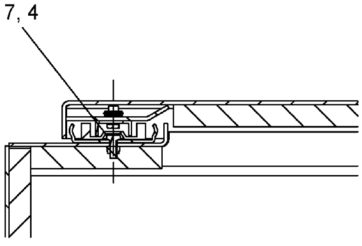

SECTION D - D

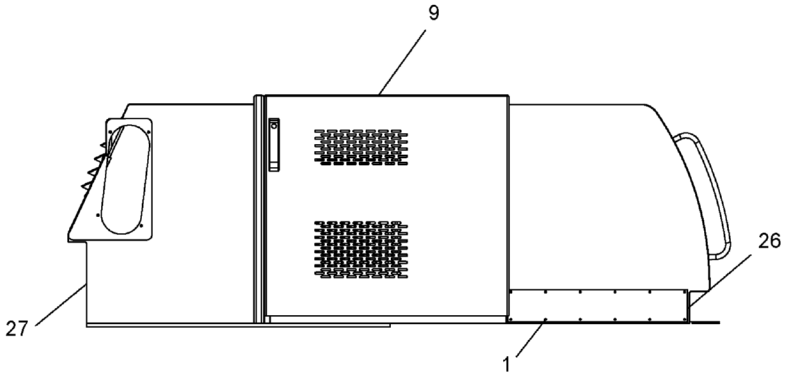

VIEW F - F

WHEN ORDERING PARTS, SPECIFY MODEL NUMBER, SERIAL NUMBER AND DESCRIPTION OF PARTS REQUIRED

REF	PART NO.	DESCRIPTION	QTY
	T153916 (Rev. A)	*Housing, Engine, ASSY*	
1	1212-48	Rivet Pop 1/8 X 3/8	12
2	714-0770	Bumper, Rubber	1
3	N04-250C000-25	Nut, HEX 0.25-20, ST SQC G5	1
4	NYM-06AM000-41	Nut, NYL-INS M6-1, STZ C8	10
5	NYM-10CM000-41	Nut, NYL-INS M10-1.5, STZ C8	1
6	S46-06AM016-28	BHSHCS, M6-1.0 X 16	14
7	SMF-06AM016-28	SCR, HHCS M6-1 X 16 FT, ST Z 8.8	10
8	T106350-011	Latch	1
9	**T138674**	Door, Sliding ASSY (see page 236)	1
10	T138724	Striker, Bolt	1
11	T139112	Foam, Sound Insulation	1
12	T139113	Foam, Sound Insulation	2
13	T139114	Foam, Sound Insulation	1
14	T139115	Foam, Sound Insulation	1
15	T139116	Foam, Sound Insulation	1
16	T139117	Foam, Sound Insulation	1
17	T139118	Foam, Sound Insulation	1
18	T139119	Foam, Sound Insulation	1
19	T139120	Foam, Sound Insulation	1
20	T139122	Foam, Sound Insulation	1
21	T139123	Foam, Sound Insulation	1
22	T139124	Foam, Sound Insulation	1
23	T139126	Foam, Sound Insulation	1
24	T143520	Plate, Cover	1
25	T147609	Ventilation Cover	1
26	T152810	Plate, Kick	1
27	T153915	Housing, Engine	1
28	T153931	Foam, Sound Insulation	1
29	V01-06AM014-Y2	RVT, FLGHD M6 X 1.0 X 14.73-GRIP 0.70-4.20	28
30	W07-250X000-20	WSH, LCK, MED SPLT 0.25, ST Z	1
31	WNF-010X000-20	WSH, Flat M10 DIN125, ST Z	2

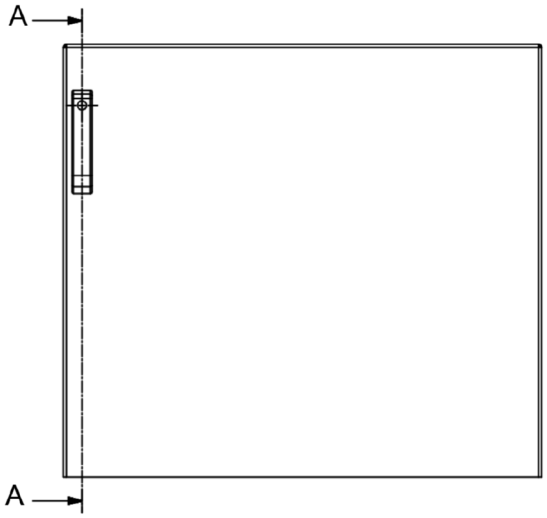

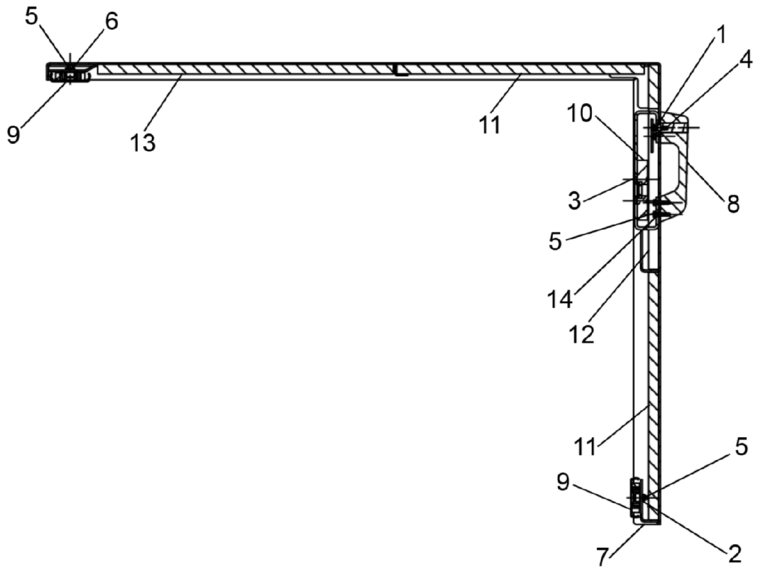

SECTION A-A

REF	PART NO.	DESCRIPTION	QTY
	T138674 (Rev. A)	*Door, Sliding ASSY*	
1	N04-250C000-25	Nut, HEX 0.25-20, ST SQC G5	1
2	NYM-06AM000-41	Nut, NYL-INS M6-1, STZ C8	5
3	S16-250C750-20	SCR, FHSHCS 0.25-20 X 0.75, ST Z	4
4	SHF-250C750-25	SCR, HHCS FT 0.25-20 X 0.75, ST Z G5	1
5	SMF-06AM016-28	SCR, HHCS M6-1 X 16 FT, ST Z 8.8	14
6	T122358	U-Spring Nut, M6-1	5
7	T138675	Door Sliding	1
8	T138678	Handle, Door	1
9	T138716	Slide, Rail	2
10	T138827	Latch, Door	1
11	T139105	Foam, Sound Insulation	2
12	T139109	Foam, Sound Insulation	1
13	T139110	Foam, Sound Insulation	1
14	W16-60MX000-G2	WSH, Lock, SPLT M6 D127B, ST Z	4

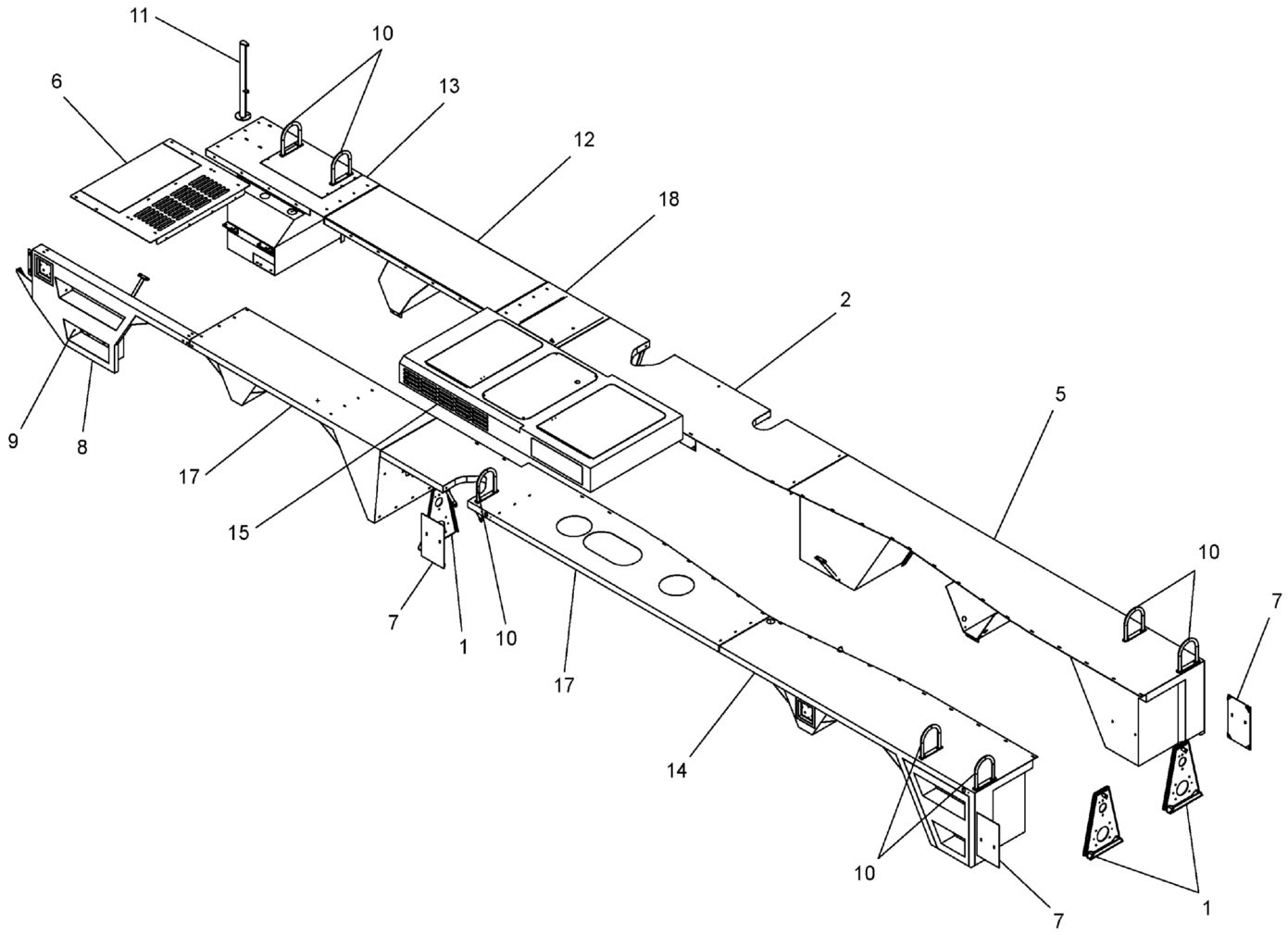

WHEN ORDERING PARTS, SPECIFY MODEL NUMBER, SERIAL NUMBER AND DESCRIPTION OF PARTS REQUIRED

REF	PART NO.	DESCRIPTION	QTY
	T154208 (Rev. A)	*Decking Assembly, T 7-2017*	
1	714F0715	Mount, Outrigger Pad	4
2	717-0221	Right Center Deck	1
3*	717-0223-34	Shim, Strut Mount	25
4*	717-0224-24	Shim, Rear Tool Box	5
5	717-0225	Right Rear Fender	1
6	717-0226	Deck, Center Front	1
7	717-0339	Outrigger Box Cover	4
8	717-0528	Fender	1
9	717-0536	Plate, Filler	1
10	717-0554	Handle	7
11	717-0556	Post, Mirror	1
12	717-1177	Fender, Right Front	1
13	717-1305	Fender, Right Front	1
14	718-0327	Fender, Left Rear	1
15	718-0367	Cover, Transmission	1
16*	718-0613	Fender, Left Front	1
17	T120325	Left Center Deck	1
18	T150875	Fender, Right Front	1

* ITEM NOT SHOWN IN ILLUSTRATION

WHEN ORDERING PARTS, SPECIFY MODEL NUMBER, SERIAL NUMBER AND DESCRIPTION OF PARTS REQUIRED

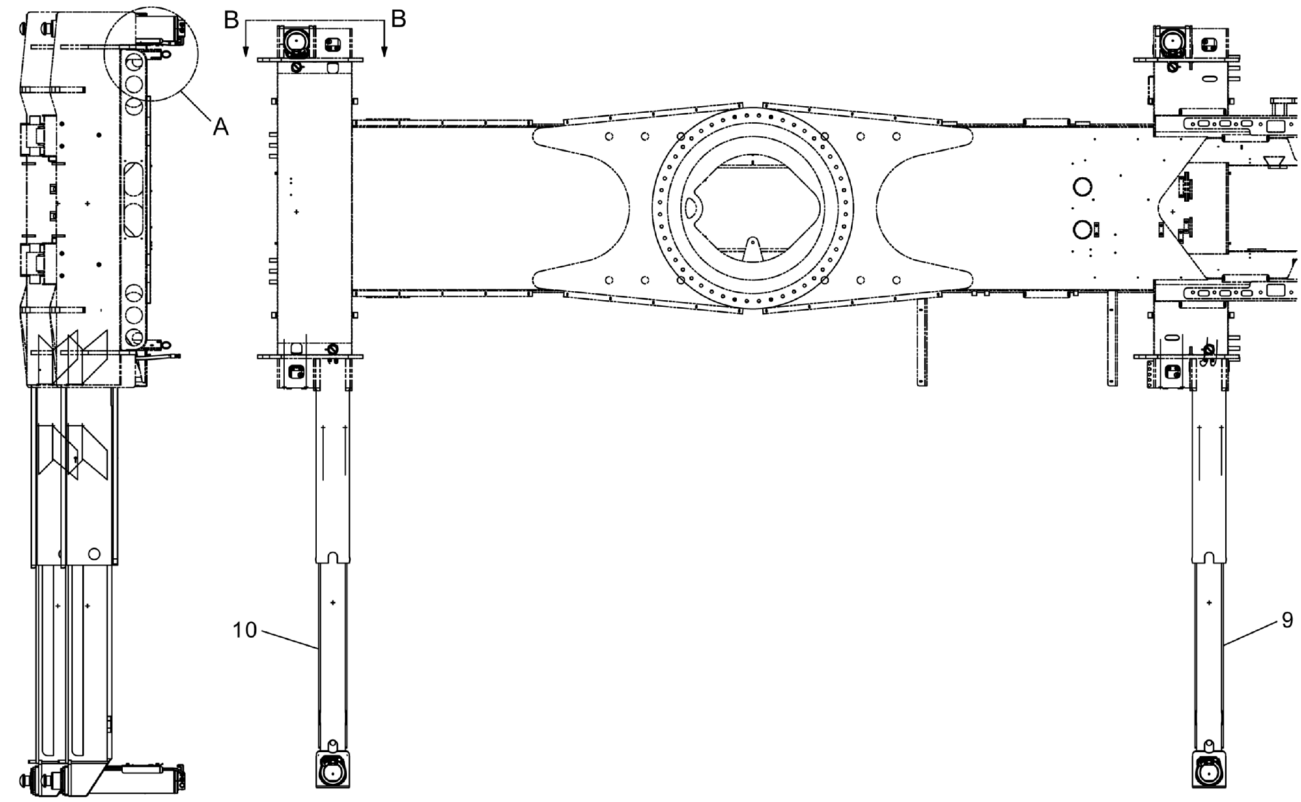

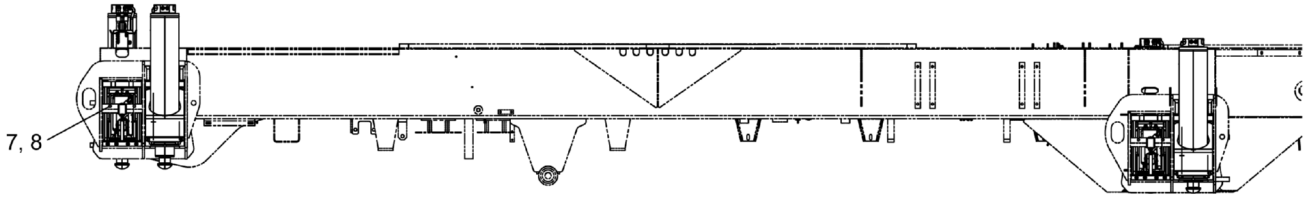

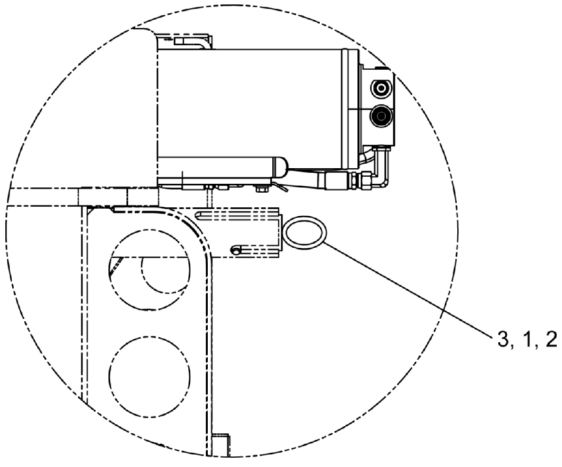

DETAIL A

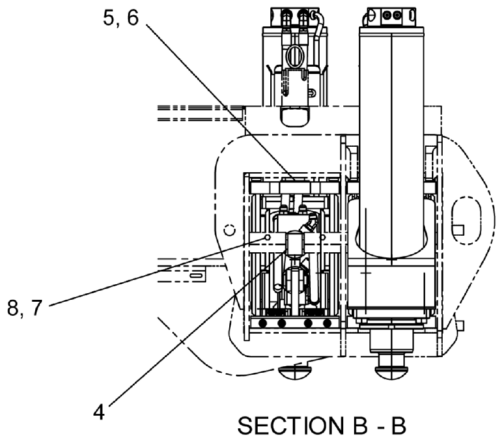

SECTION B - B

WHEN ORDERING PARTS, SPECIFY MODEL NUMBER, SERIAL NUMBER AND DESCRIPTION OF PARTS REQUIRED

REF	PART NO.	DESCRIPTION	QTY
	T121257 (Rev. D)	*Outrigger Assembly*	
1	12219-1	Cable 7 X 7 Aircraft Plastic	1
2	1222-225	1/8 Cable Sleeve	4
3	713F0111	Pin Weldment	4
4	717-0859	Pin	4
5	718-0620	Wear Pad	4
6	718-0622	Spacer	4
7	NYH-312C000-22	Nut, NYL-INS HVY 0.312-18, ST SQC G2	8
8	S01-312CB50-25	SCR, HHCS 0.3125-18 X 2.50, ST Z G5	8
9	**T121301**	Beam Assembly (see page 242)	2
10	**T121302**	Beam Assembly (see page 250)	2

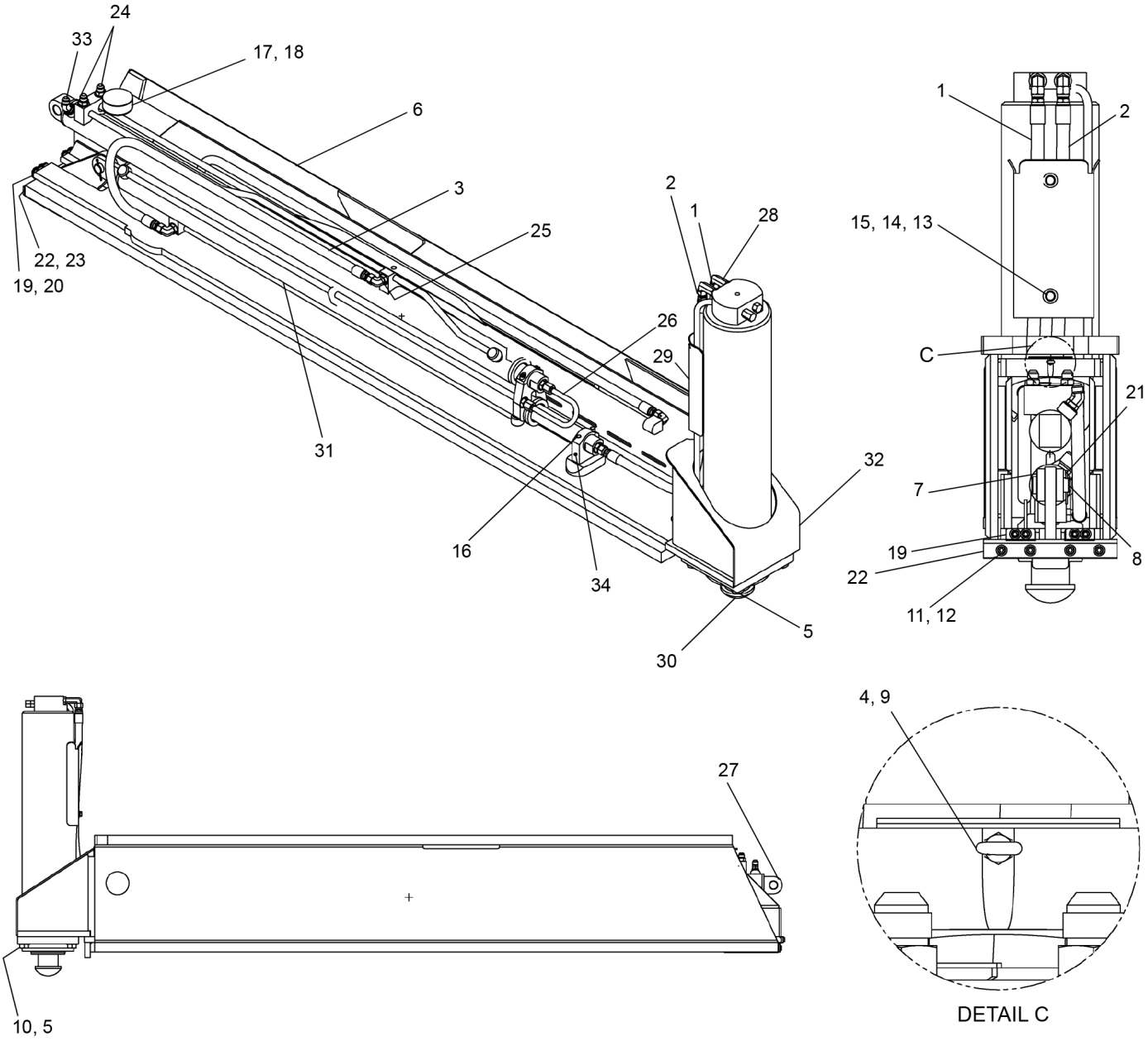

WHEN ORDERING PARTS, SPECIFY MODEL NUMBER, SERIAL NUMBER AND DESCRIPTION OF PARTS REQUIRED

LOAD KING BY CUSTOM TRUCK ONE SOURCE

OUTRIGGER BEAM ASSEMBLY (REAR)

DATE: Released 08-2018

MODEL: 480-126

PAGE: 242

CHAPTER 2

REF	PART NO.	DESCRIPTION	QTY
	T121301 (Rev. G)	*Beam Assembly*	
1	716-0222-166	Hose, -8, 3000, FJIC-8SW/FJIC-8SW, 4200	1
2	716-0222-39	Hose, -8, 3000, FJIC-8SW/FJIC-8SW, 990	1
3	716-0222-54	Hose, -8, 3000, FJIC-8SW/FJIC-8SW, 1372	1
4	N23-164C000-20	Nut, HEX, MACH 08-32, ST Z	1
5	S01-750CB25-Y8	SCR, HHCS 075-10 X 225, ST YZ GR8	4
6	718F0003	Inner Beam	1
7	1208-20	Shim, Round 1.00 X 2.00 X 0.048, ST Z	1
8	PIN-718-0595	Pin, Clevis, 1 X 2.25	1
9	T146976	Eye Bolt	1
10	WAN-75NX000-20	WSH, FL TYPA-NRW 0.75, ST Z	4
11	1203-255	Screw, Button Head, TORX	8
12	3801801	Washer, Flat, 0.31, Stainless	8
13	SHF-375C750-25	SCR, HHCS FT 0.375-16 X 0.75, STZ G5	2
14	W07-375X000-20	Washer Lock 3/8 MED	2
15	WAW-37WX000-20	WSH, FL TYPA-WID 0.375, ST Z	2
16	501-500CD00-25	SCR, HHCS 050-13 X 400, ST Z GR5	2
17	718-0620	Wear Pad	1
18	718-0622	Spacer	1
19	718-0930	Bar, Inner	2
20	718-0929	Shim, Inner	1
21	P02-125XB00-20	Pin, Cotter 0.125 X 2.00, ST Z	1
22	718-0932	Bar, Outer	1
23	718-0931	Shim, Outer	1
24	1219-441	Adapter, MJIC-8/MORB-8	5
25	1219-470	Elbow, 90, MJIC-8/MORB-8	3
26	718-0029	Tube, -8, FJIC -8SW/FJIC -8SW	1
27	**T144785**	Cylinder, Outrigger, Upper (see page 244)	1
28	12019-690	Elbow, 90, MJIC-8/MORB-8, L	2
29	717-0346	Cover, Hose	1
30	**718-0728**	Outrigger Jack Cylinder (see page 246)	1
31	**T121256**	Cylinder Assembly (Fisher Hydraulics) (see page 248)	1
32	718F0004	Outer Beam	1
33	12019-447	Elbow, 45, MJIC-8/MORB-8	1
34	T146918	Clamp, Cylinder	1

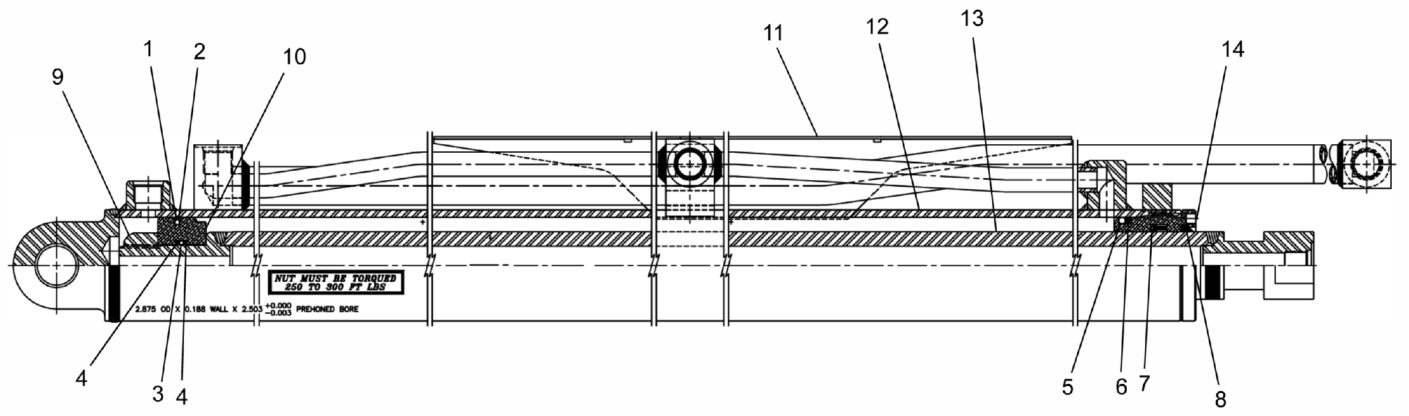
1
2
10
9
11
12
13
14
NUT MUST BE TORQUED
250 TO 300 FT LBS
2.875 OD X 0.188 WALL X 2.503 +0.000 -0.003 PREHONED BORE
4
3
4
5
6
7
8

REF	PART NO.	DESCRIPTION	QTY
	T144785 (Rev. A)	*Cylinder, Outrigger, Upper*	
	229497	Seal Kit (Includes Items 1 Thru 8)	
1	215117	Teflon Piston Seal	1
2	215118	O-Ring	1
3	215120	O-Ring	1
4	215119	Back-Up Ring	2
5	215121	O-Ring	1
6	215122	Back-Up Ring	1
7	215123	Loaded U-Cup	1
8	215124	Rod Wiper	1
9	216994	Locknut, 1-14	1
10	225318	Piston	1
11	229493	Guard Mount	1
12	229494	Barrel Assembly	1
13	229495	Rod Assembly	1
14	229496	Internal Head	1

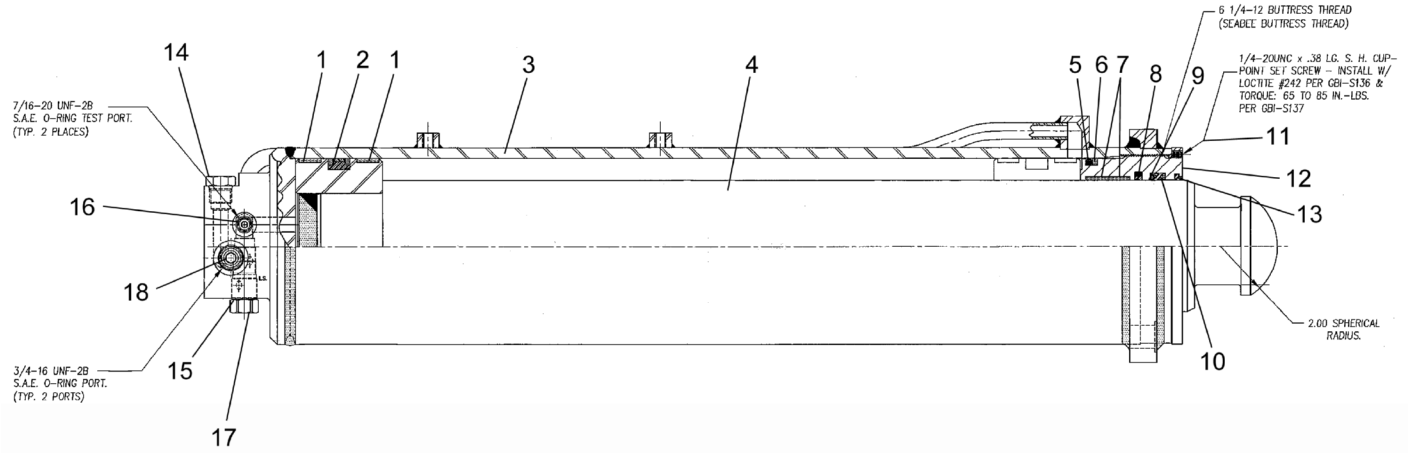

WHEN ORDERING PARTS, SPECIFY MODEL NUMBER, SERIAL NUMBER AND DESCRIPTION OF PARTS REQUIRED

REF	PART NO.	DESCRIPTION	QTY
	718-0728 (Rev. C)	*Outrigger Jack Cylinder*	
	217235	Seal Kit Special Soft (Includes Items 1, 2, 5 Thru 10 & 13)	
1	217250	Wear Ring, 6.00 X 5.75 X .75	2
2	217249	Capped "T" Seal, 6.00	1
3	217248	Case Weldment	1
4	216201	Shaft Assembly	1
5	217247	ORing 433 6.000OD 70N 0.250CS	1
6	217246	Backup 433 6.000 1758	1
7	217245	Wear Ring, 4.75 X 4.50 X .75	2
8	217244	Step Seal "K", 4.50	1
9	217243	"DZ" U-Cup ~ 4.50 X 5.00 X .38	1
10	217242	U-Cup Back-Up ~ 4.50 X 5.00 X .079 THK	1
11	216546	SHCPSS, .25-20 X .38 Lg W/ Nylok Patch	1
12	217241	Head Gland	1
13	217240	Wiper ~4.50 X 4.935 X .135	1
14	216996	Metal Plug ~ 3/4-16 -8 SAE	2
15	217239	"Sun" C/B Valve ~ CBCA-LIN 600PSI	1
16	217238	Boss Plug ~ 7/16-20 -4 SAE	2
17	217237	"Sun" Check Valve ~ CKCB-XCN	1
18	217236	Boss Plug ~ 3/4-16 -8 SAE	2

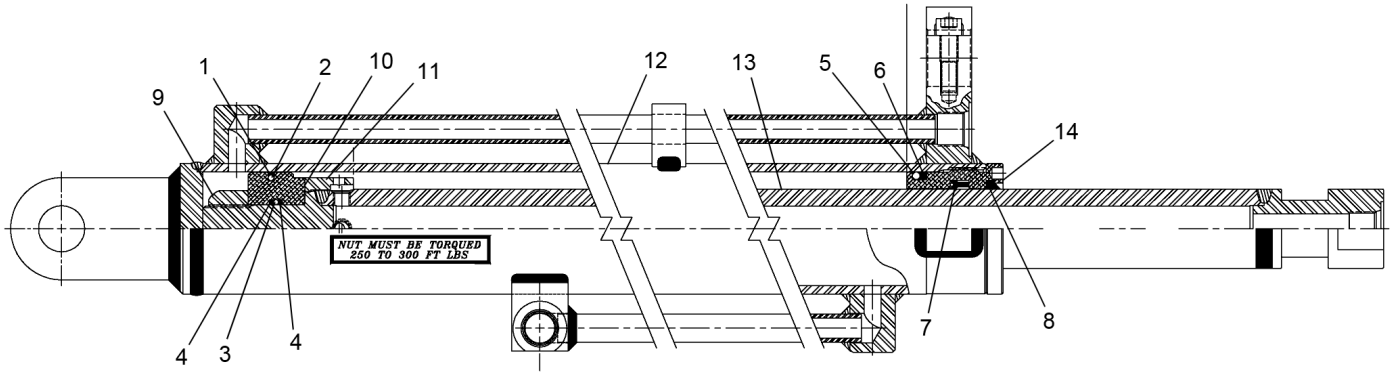
1
2
10
11
12
13
5
6
9
14
NUT MUST BE TORQUED
250 TO 300 FT LBS
4
3
4
7
8

REF	PART NO.	DESCRIPTION	QTY
	T121256 (Rev. A)	*Cylinder Assembly (Fisher Hydraulics)*	
	216993	Seal Kit (Includes Items 1 Thru 8)	
1	215117	Teflon Piston Seal	1
2	215118	O-Ring	1
3	215120	O-Ring	1
4	215119	Back-Up Ring	2
5	215121	O-Ring	1
6	215122	Back-Up Ring	1
7	215123	Loaded U-Cup	1
8	215124	Rod Wiper	1
9	223010	Locknut	1
10	225318	Piston	1
11	225319	Spacer	1
12	225320	Barrel Assembly	1
13	225321	Rod Assembly	1
14	215129	Internal Head	1

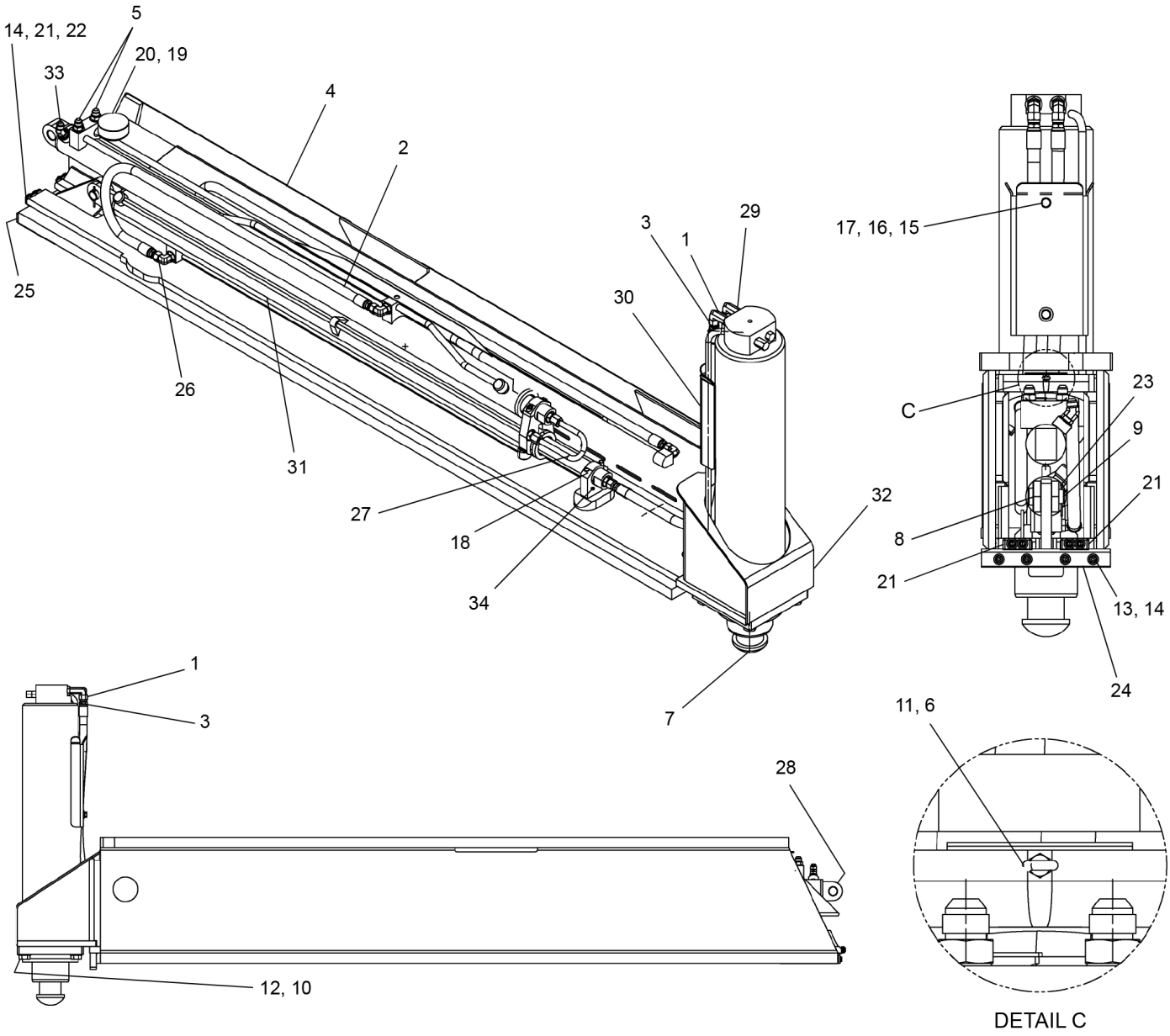

WHEN ORDERING PARTS, SPECIFY MODEL NUMBER, SERIAL NUMBER AND DESCRIPTION OF PARTS REQUIRED

LOAD KING BY CUSTOM TRUCK ONE SOURCE

OUTRIGGER BEAM ASSEMBLY (FRONT)

DATE: Released 08-2018

MODEL: 480-126

PAGE: 250

CHAPTER 2

REF	PART NO.	DESCRIPTION	QTY
	T121302 (Rev. G)	*Beam Assembly*	
1	716-0222-166	Hose, -8, 3000, FJIC-8SW/FJIC-8SW, 4200	1
2	716-0222-54	Hose, -8, 3000, FJIC-8SW/FJIC-8SW, 1372	1
3	716-0222-39	Hose, -8, 3000, FJIC-8SW/FJIC-8SW, 990	1
4	718F0003	Inner Beam	1
5	1219-441	Adapter, MJIC-8/MORB-8	5
6	T146976	Eye Bolt	1
7	**718-0879**	Cylinder, Jack (SEABEE) (see page 252)	1
8	1208-20	Shim, Round 1.00 X 2.00 X 0.048, ST Z	1
9	PIN-718-0595	Pin, Clevis, 1 X 2.25	1
10	S0I-750CB25- Y8	SCR, HHCS 0.75-10 X 2.25, ST YZ GR8	4
11	N23-164C000-20	Nut, HEX, MACH 08-32, ST Z	1
12	WAN-75NX000-20	WSH, FL TYPA-NRW 0.75, ST Z	4
13	1203-255	Screw, Button Head, TORX	8
14	3801801	Washer, Flat, 0.31, Stainless	8
15	SHF-375C750-25	SCR, HHCS FT 0.375-16 X 0.75, STZ G5	2
16	W07-375X000-20	Washer Lock 3/8 MED	2
17	WAW-37WX000-20	WSH, FL TYPA-WID 0.375, ST Z	2
18	S0I-500CD00-25	SCR, HHCS 0.50-13 X 4.00, ST Z GR5	2
19	718-0620	Wear Pad	1
20	718-0622	Spacer	1
21	718-0930	Bar, Inner	2
22	718-0929	Shim, Inner	1
23	P02-125XB00-20	Pin, Cotter 0.125 X 2.00, ST Z	1
24	718-0932	Bar, Outer	1
25	718-0931	Shim, Outer	1
26	1219-470	Elbow, 90, MJIC-8/MORB-8	3
27	718-0029	Tube, -8, FJIC -8SW/FJIC -8SW	1
28	**T144785**	Cylinder, Outrigger, Upper (see page 244)	1
29	12019-690	Elbow, 90, MJIC-8/MORB-8, L	2
30	717-0346	Cover, Hose	1
31	**T121256**	Cylinder Assembly (Fisher Hydraulics) (see page 248)	1
32	718F0004	Outer Beam	1
33	12019-447	Elbow, 45, MJIC-8/MORB-8	1
34	T146918	Clamp, Cylinder	1

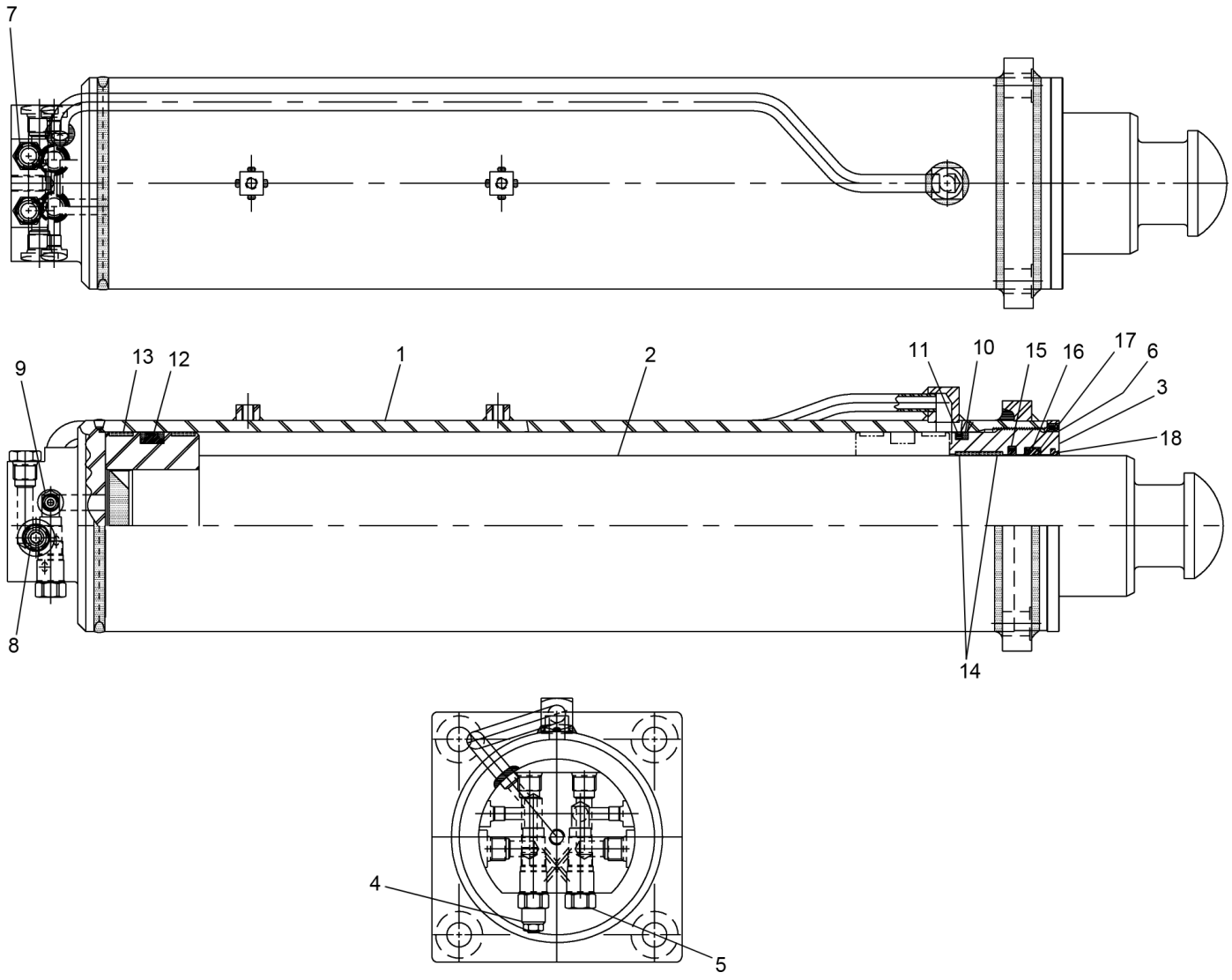

WHEN ORDERING PARTS, SPECIFY MODEL NUMBER, SERIAL NUMBER AND DESCRIPTION OF PARTS REQUIRED

LOAD KING BY CUSTOM TRUCK ONE SOURCE

OUTRIGGER JACK CYLINDER SEABEE - (FRONT)

DATE: Released 08-2018

MODEL: 480-126

PAGE: 252

CHAPTER 2

REF	PART NO.	DESCRIPTION	QTY
	718-0879 (Rev. 00)	*Cylinder, Jack (SEABEE)*	
	222065	Kit Seal 6.000 4.500 AN	
1	226050	Case Weld G 6.000 33.250L	1
2	222051	Rod Weld G 4.500 35.750L SPHER	1
3	226051	Head G 6.000 4.500 3.500L Duct	1
4	222034	Valve CBAL CBCA-LIN 600	1
5	219866	Valve CKCB-XCN Check	1
6	222472	SHSS 0.250-20 0.375 Cup Nylok	1
7	222053	Plug SAE 8 0.750-16 HH STL	2
8	222054	Plug SAE 8 0.750-16 SH STL	2
9	222055	Plug SAE 4 0.438-20 SH STL	2
10	217246	Backup 433 6.000 1758	1
11	217247	ORing 433 6.000OD 70N 0.250CS	1
12	222058	CST Seal 6.000B 0.760W	1
13	222059	Wring 6.000 5.750 0.750L SC	2
14	222060	Wring 4.750 4.500 0.750 GF	2
15	222061	Seal Rod 4.500R Buffer	1
16	222062	UCUP 4.500R 0.250CS 0.375L DPZ	1
17	226052	UCB 4.500R 0.250CS 0.080	1
18	222064	Wiper 4.500 0.218 0.135 AN	1

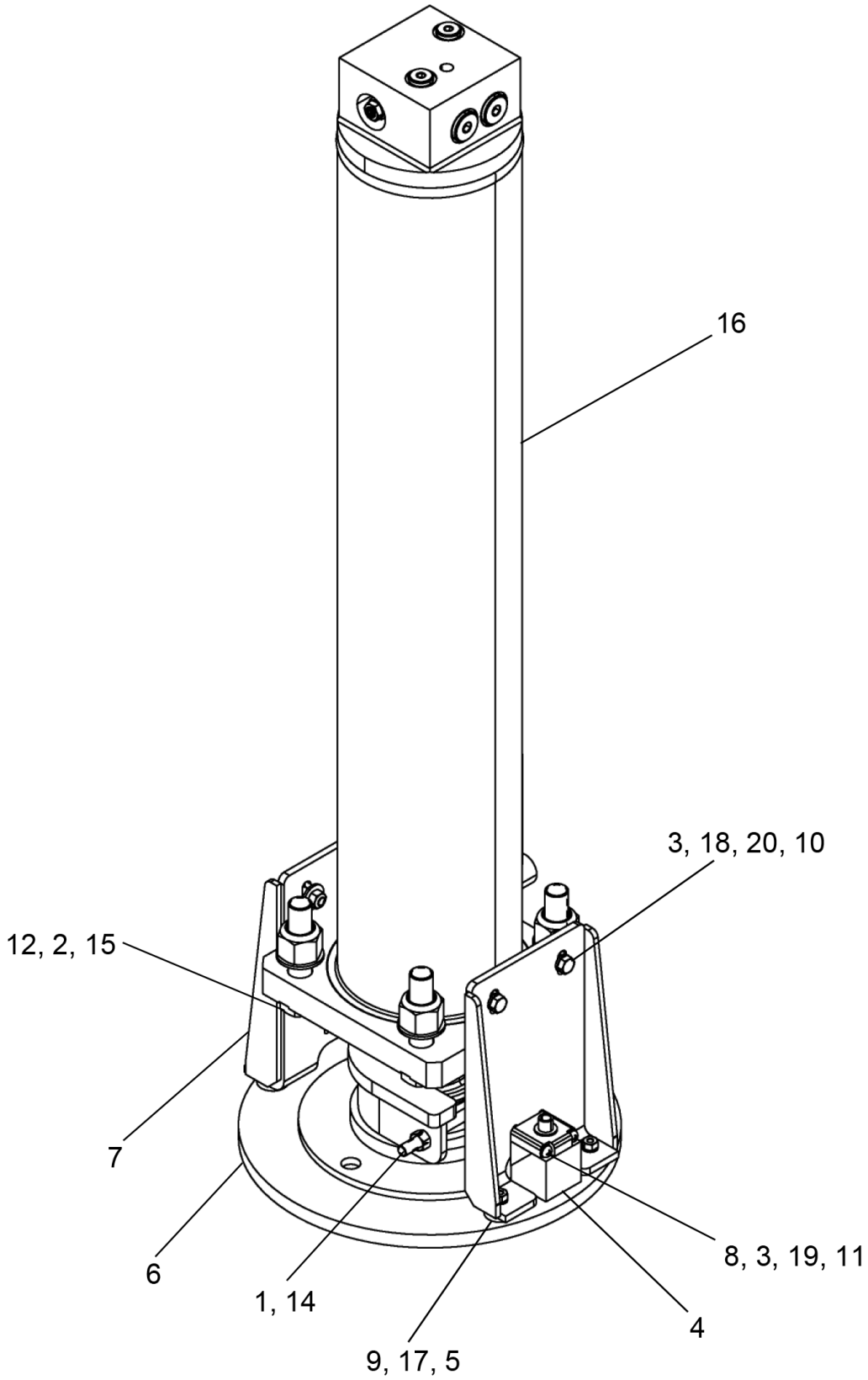

WHEN ORDERING PARTS, SPECIFY MODEL NUMBER, SERIAL NUMBER AND DESCRIPTION OF PARTS REQUIRED

REF	PART NO.	DESCRIPTION	QTY
	717A0390 (Rev. C)	*Front Jack Assembly*	
1	1205-43	Nut, LCK, NYL Patch 0.375-16, ZG2	1
2	1209-58	Washer, Flat, .75 Hardened	4
3	1210-7	Washer, Lock, #10	2
4	441-6834	Switch - PROX	1
5	714-0770	Bumper, Rubber	4
6	**717F0362**	Pad, FRT Jack (see page 256)	1
7	717F0387	Front Pad Stop	2
8	MK62704	Screw, #10-32FF X 2.50	2
9	N04-250C000-25	Nut, HEX 0.25-20, ST SQC G5	4
10	N04-312C000-25	Nut, HEX 0.3125-18, ST Z GR5	4
11	N23-190F000-20	Nut, HEX, MACH 10-32, ST Z	2
12	NYH-750F000-22	Nut, NYL-INS HVY 0.75-16, ST Z G2	4
13*	S01-312CA00-25	Capscrew, .31C X 1.00	4
14	S01-375CE50-25	SCR, HHCS 0.375-16 X 5.50, ST Z GR5	1
15	S01-750CC50-Y8	SCR, HHCS 0.75-10 X 3.50, ST YZ GR8	4
16	**T146064**	Jack Cylinder (Hengli) (see page 257)	1
17	W07-250X000-20	WSH, LCK, MED SPLT 0.25, ST Z	4
18	W07-312X000-20	WSH, LCK, MED SPLT 0.3125, ST SQC	4
19	WAR-187X000-22	WSH, FL TYPA-REG 0.1875, ST Z	2
20	WAW-31WX000-20	WSH, FL TYPA-WID 0.3125, ST SQC	4

* ITEM NOT SHOWN IN ILLUSTRATION

WHEN ORDERING PARTS, SPECIFY MODEL NUMBER, SERIAL NUMBER AND DESCRIPTION OF PARTS REQUIRED

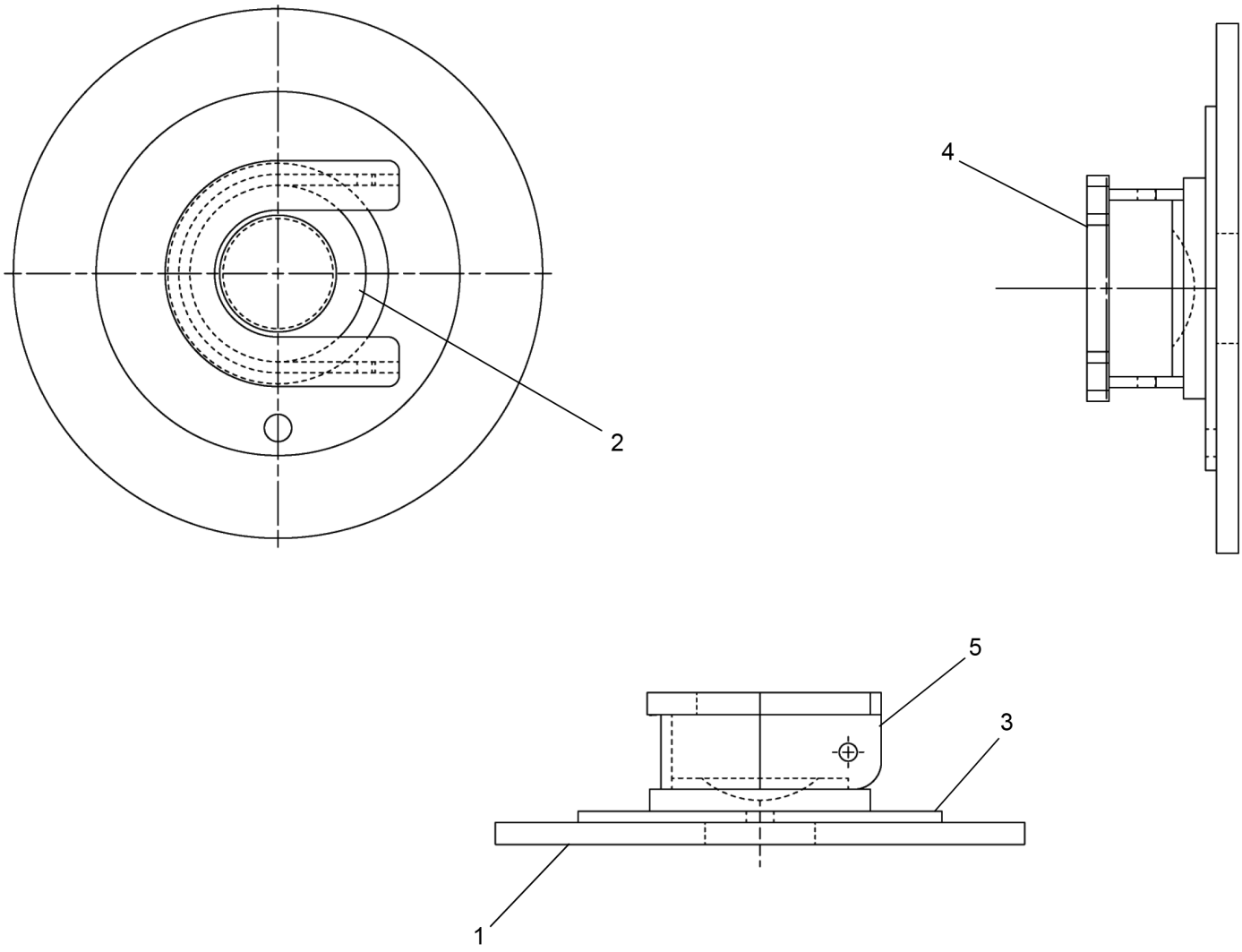

REF	PART NO.	DESCRIPTION	QTY
	717F0362 (Rev. C)	*Pad, FRT Jack*	
1	717-0361	Disk 12.00 OD	1
2	709-7638	Block	1
3	708-0813	Plate 8.25 OD	1
4	717-0997	Plate	1
5	717-0996	Bracket	1

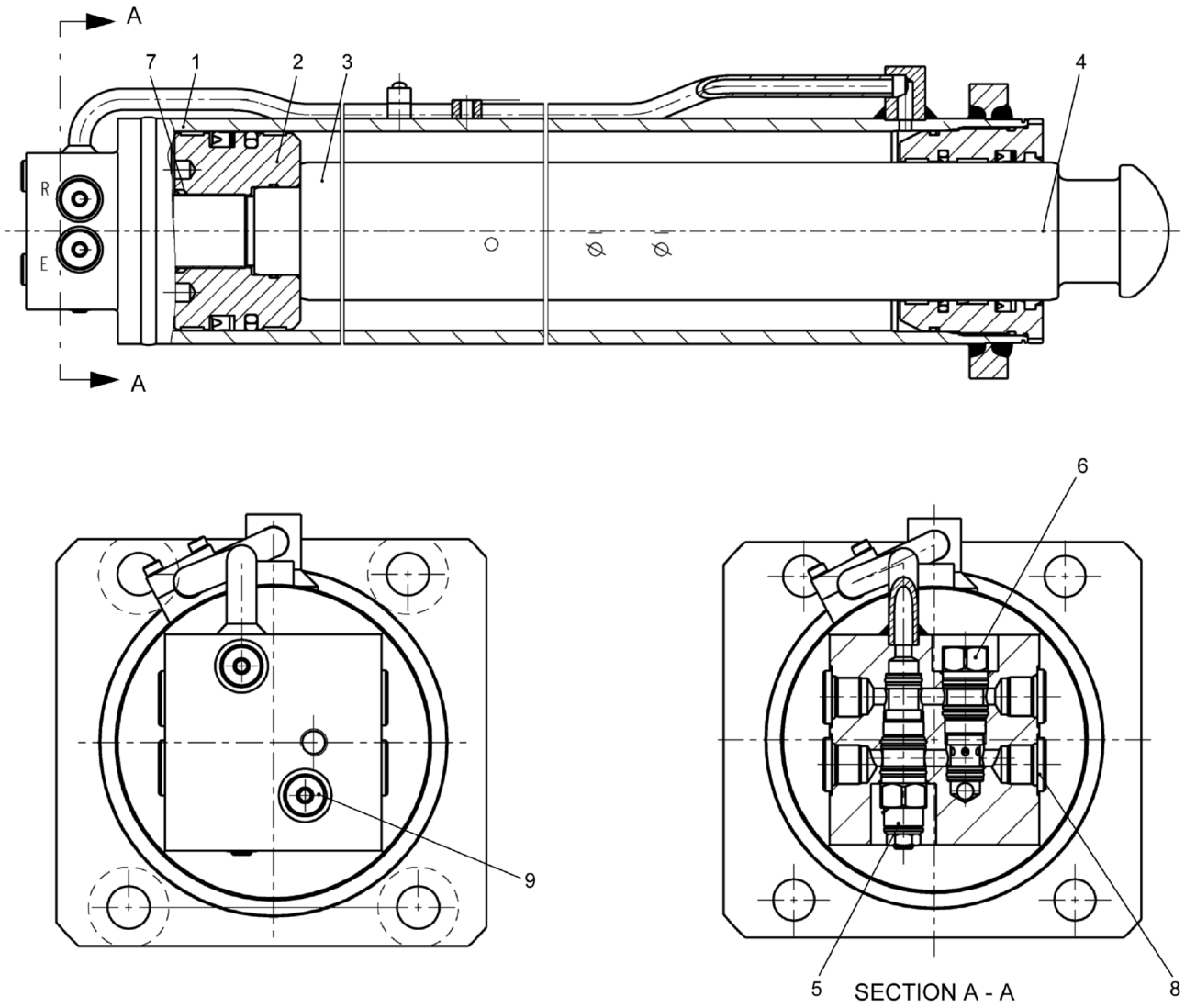

WHEN ORDERING PARTS, SPECIFY MODEL NUMBER, SERIAL NUMBER AND DESCRIPTION OF PARTS REQUIRED

REF	PART NO.	DESCRIPTION	QTY
	T146064 (Rev. A)	*Jack Cylinder (Hengli)*	
	228761	Seal Kit	1
1	228757	Barrel Assembly	1
2	228758	Piston	1
3	228759	Rod	1
4	228760	Guide Bush	1
5	227627	Balance Valve, 60L/min	1
6	227625	Check Valve, 60L/min	1
7	228417	Set Screw, M6 X 8	2
8	228605	Plug, 3/4-16UNF	4
9	228414	Plug, 9/16-18UNF	2

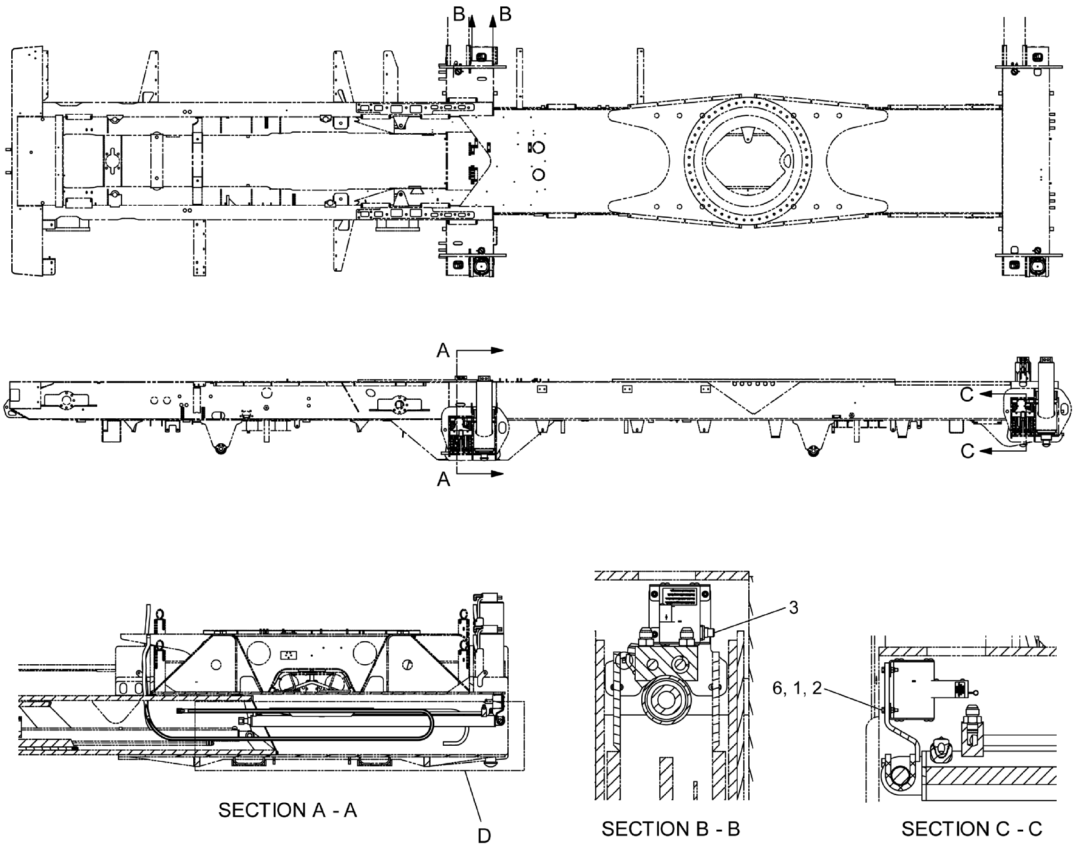

REF	PART NO.	DESCRIPTION	QTY
	T121258 (Rev. F)	*Outrigger Sensor Assembly*	
1	NYM-407M000-Y8	Nut, NYL-INS M4-0.7, ST SQC G8	16
2	SMF-407M020-28	SCR, HHCS M4-0.7 X 20 FT, ST SQC C8.8	16
3	T121923	Harness ORPS	4
4	T144476	Bracket, Sensor	4
5	T144508	Sensor, Outrigger, ASM WS61	4
6	WMH-40MX000-P0	WSH, Flat, Hard M4 D125, STL	32

REF	PART NO.	DESCRIPTION	QTY
	480-126-2017-ENGINES* (Rev. 00)	*T7-2017 Engine Options*	
1	**T154206**	Engine, T 7-2017 ROW (see page 261)	1
2	**T148362**	Engine, T 7-2017 USA (see page 375)	1

* NOT PURCHASABLE AT THIS LEVEL

REF	PART NO.	DESCRIPTION	QTY
	T154206 (Rev. A)	*Engine, T 7-2017 ROW*	
1	T150379	Hraness, AC Adaptor, MTU, 2017	1
2	T126386	ECU, 12V, Premium	1
3	12400-2018	Decal, Diesel Fuel Only	1
4	**T133635**	Rear Suspension Assembly (see page 262)	1
5	T119918	Tier 3 Emissions Decal Installation	1
6	**T156048**	T5/T7 Engine Installation, OM460, 2017 (see page 282)	1
7	T136583	Fluid & Lube, Export	1
8	**T133326**	Air Intake Assembly, GP-460 (see page 350)	1
9	**T154860**	Lower Cab Assembly, MB460, 2017 (see page 352)	1
10	**T132930**	Fuel GP-MB460 T5 T7 (see page 371)	1
11	**T133324**	Exhaust Assembly, GP-460 (see page 373)	1

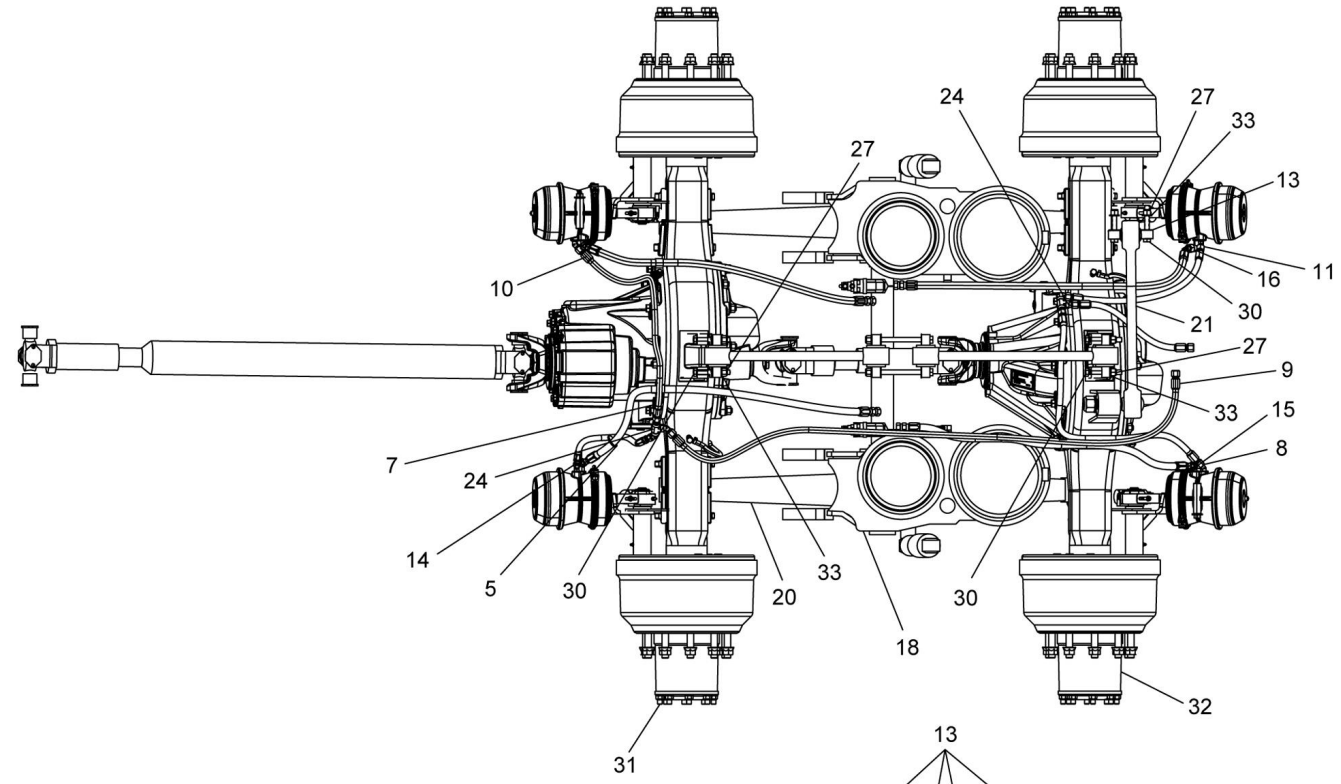

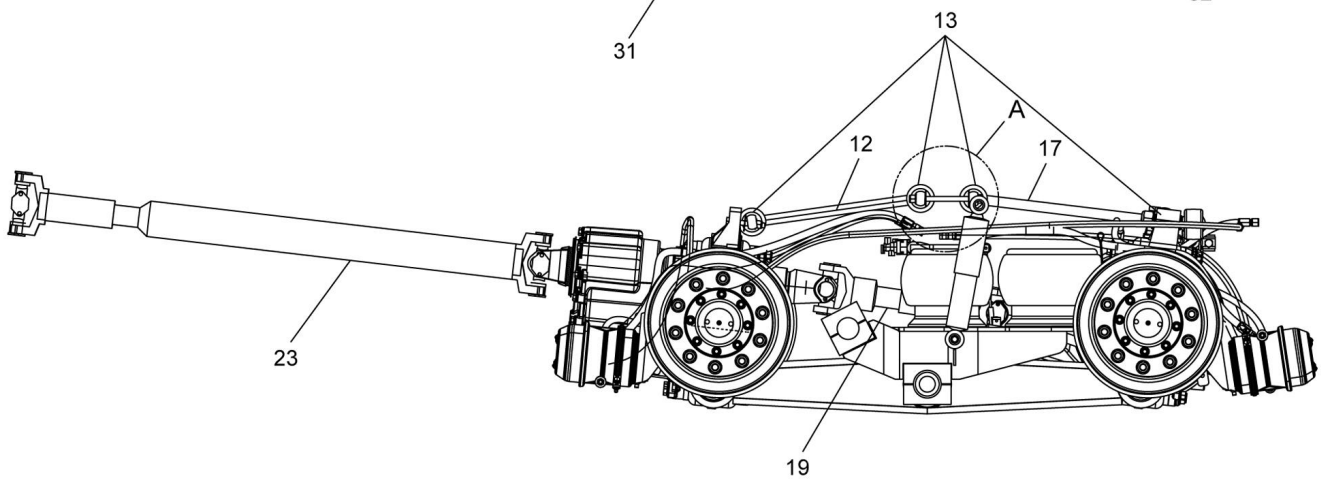

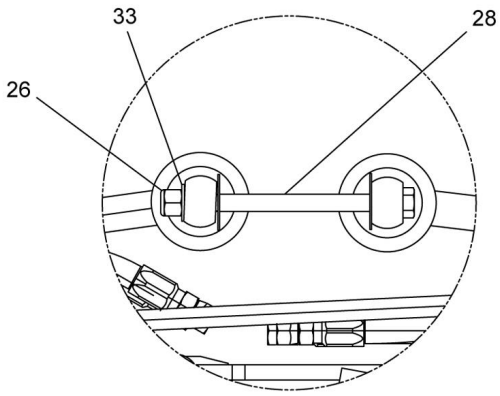

DETAIL A

WHEN ORDERING PARTS, SPECIFY MODEL NUMBER, SERIAL NUMBER AND DESCRIPTION OF PARTS REQUIRED

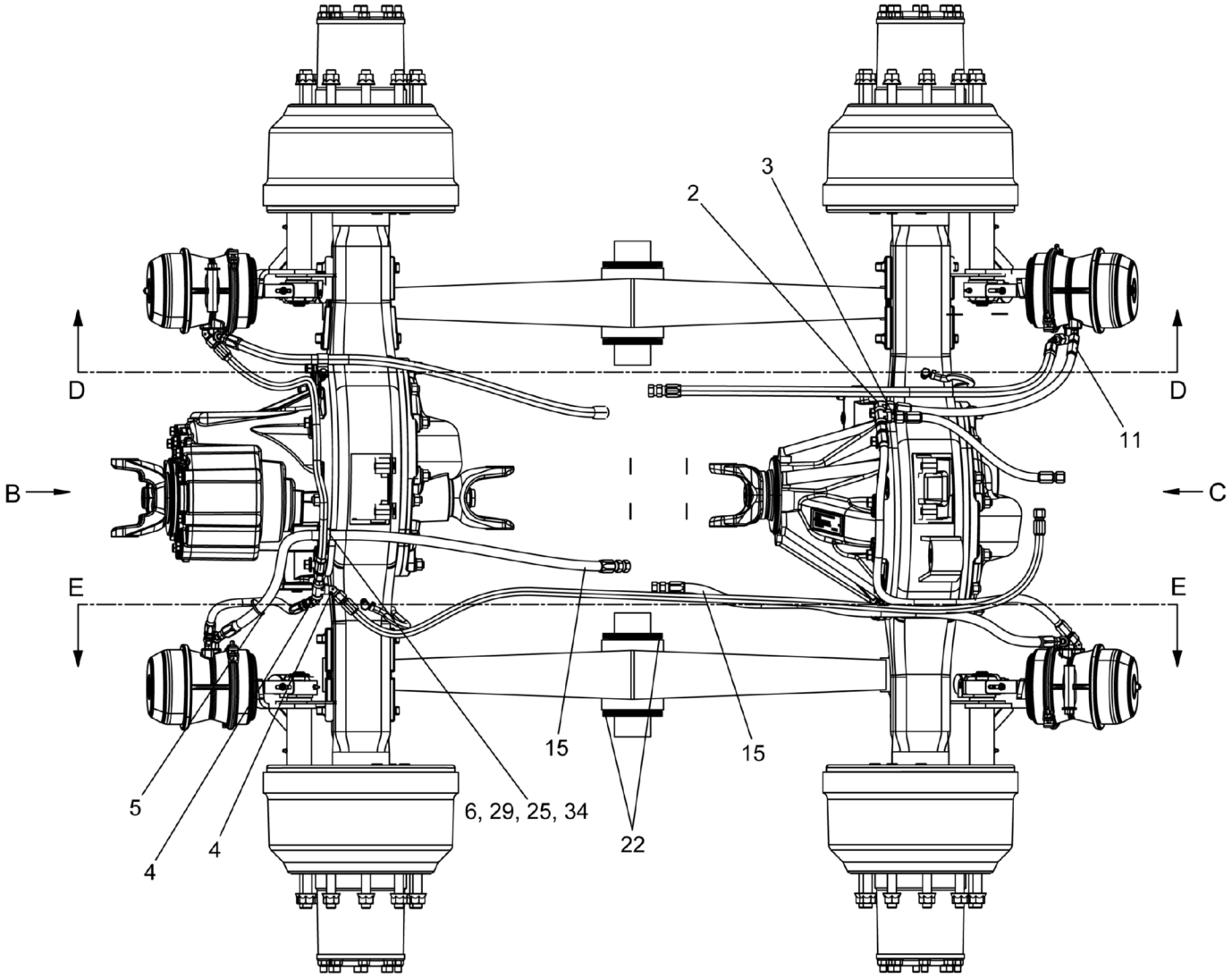

WHEN ORDERING PARTS, SPECIFY MODEL NUMBER, SERIAL NUMBER AND DESCRIPTION OF PARTS REQUIRED

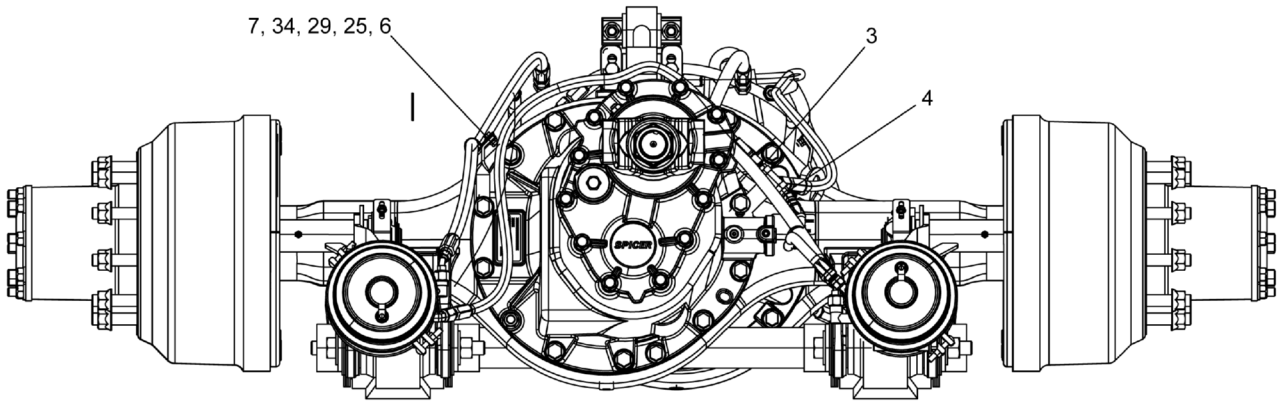

VIEW B

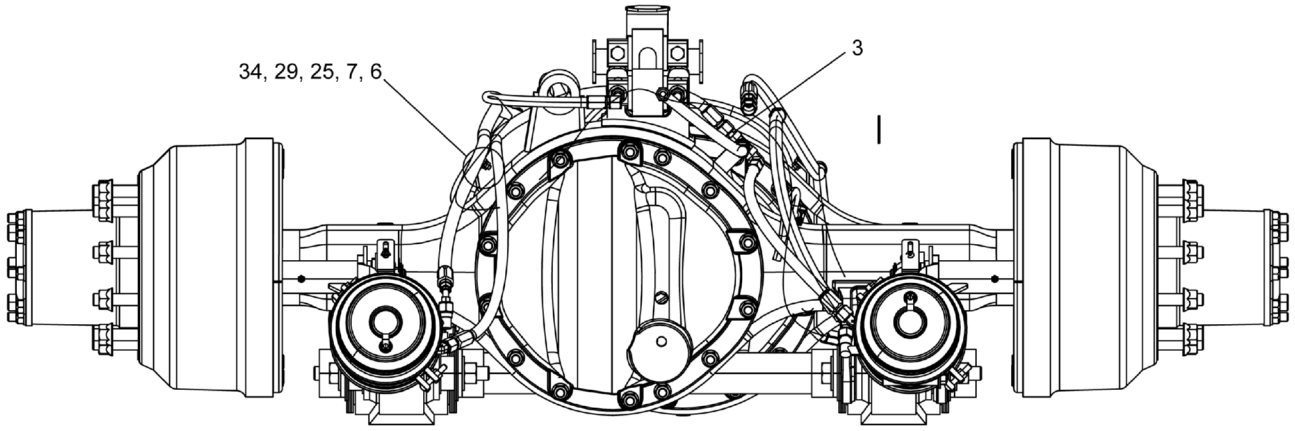

VIEW C

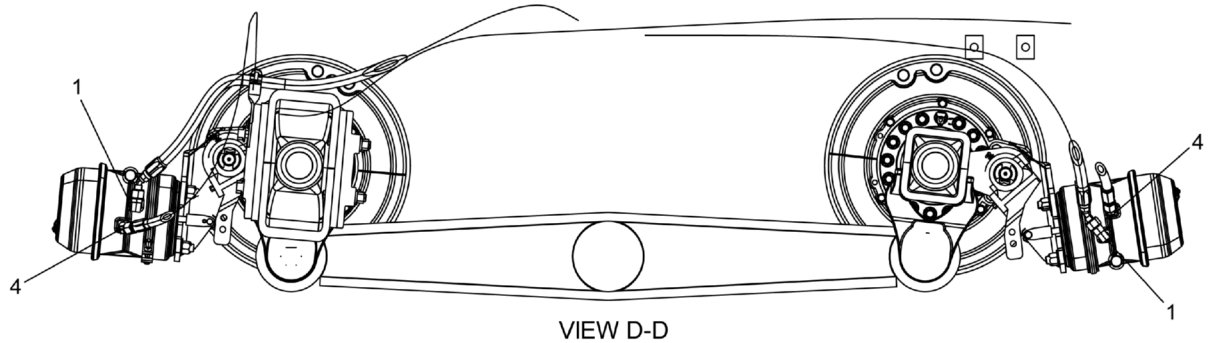

VIEW D-D

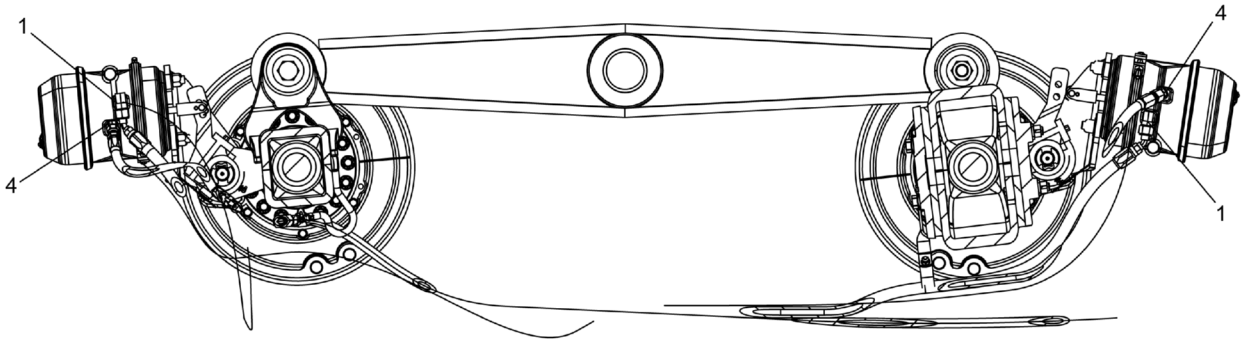

SECTION E - E

WHEN ORDERING PARTS, SPECIFY MODEL NUMBER, SERIAL NUMBER AND DESCRIPTION OF PARTS REQUIRED

REF	PART NO.	DESCRIPTION	QTY
	T133635 (Rev. B)	*Rear Suspension Assembly*	
1	12019-314	Elbow 5/8"M SAE 3/8"M NPT	4
2	12019-56	Elbow, 90, MSAE-8/ MNPT-6	1
3	12019-63	Adapter, MSAE45-8/MNPT-6	3
4	12019-67	Elbow, 45, MSAE-8/MNPT-6	6
5	1222-184	Plastic Tie	12
6	1240-29	Clamp P, 1.125 DIA	3
7	44821	Support	3
8	707A7144	Hose -8 SAE SW	1
9	707A7210	Hose - SAE SW	1
10	707A7211	Hose -8 SAE SW	1
11	709A5114	Hose -8 JIC SW	2
12	717-0178	Torque Rod	1
13	717-0180	Shim 2.00 X 1.50 X 0.060	10
14	717-0595-18	Hose ASSY .41 ID	1
15	717-0736-46	Hose, ASSY .50 ID	3
16	717-0736-53	Hose ASSY .50 ID	1
17	718-0036	Torque Rod	1
18	**718-0129**	Lower Suspension Kit (see page 266)	1
19	**718-0142**	Drive Shaft, Inter-Axle (see page 273)	1
20	**718-0146**	Beam Kit 54.00 (see page 275)	1
21	718-0969	Torque Rod, Transverse	1
22	718-0980	Shim-Suspension	16
23	718-1033	Drive Shaft-Rear	1
24	F52251	Tee With Bracket	2
25	NFH-312C000-25	Nut, HEX, Flange 0.312-18, ST Z G5	3
26	NYL-625C000-Y8	Nut, HEX NYL-INS 0.625-11, ST YZ G8	2
27	NYL-625F000-Y8	Nut, HEX NYL-INS 0.625-18, ST YZ G8	6
28	S01-625CH50-Y8	SCR, HHCS 0.625-11 X 8.50, ST YZ G8	2
29	SHF-312CA00-25	SCR, HHCS FT 0.312-18 X 1.00, ST Z G5	3
30	SHF-625FD50-Y8	SCR, HHCS FT 0.625-18 X 4.50, ST YZ G8	6
31	**T133542**	Axle, FWD Rear (see page 276)	1
32	**T133544**	Axle, RWD Rear (see page 280)	1
33	WAH-62NX000-20	WSH, FL HRD A-NRW 0.625, ST SQC	8
34	WAW-31WX000-20	WSH, FL TYPA-WID 0.3125, ST SQC	3

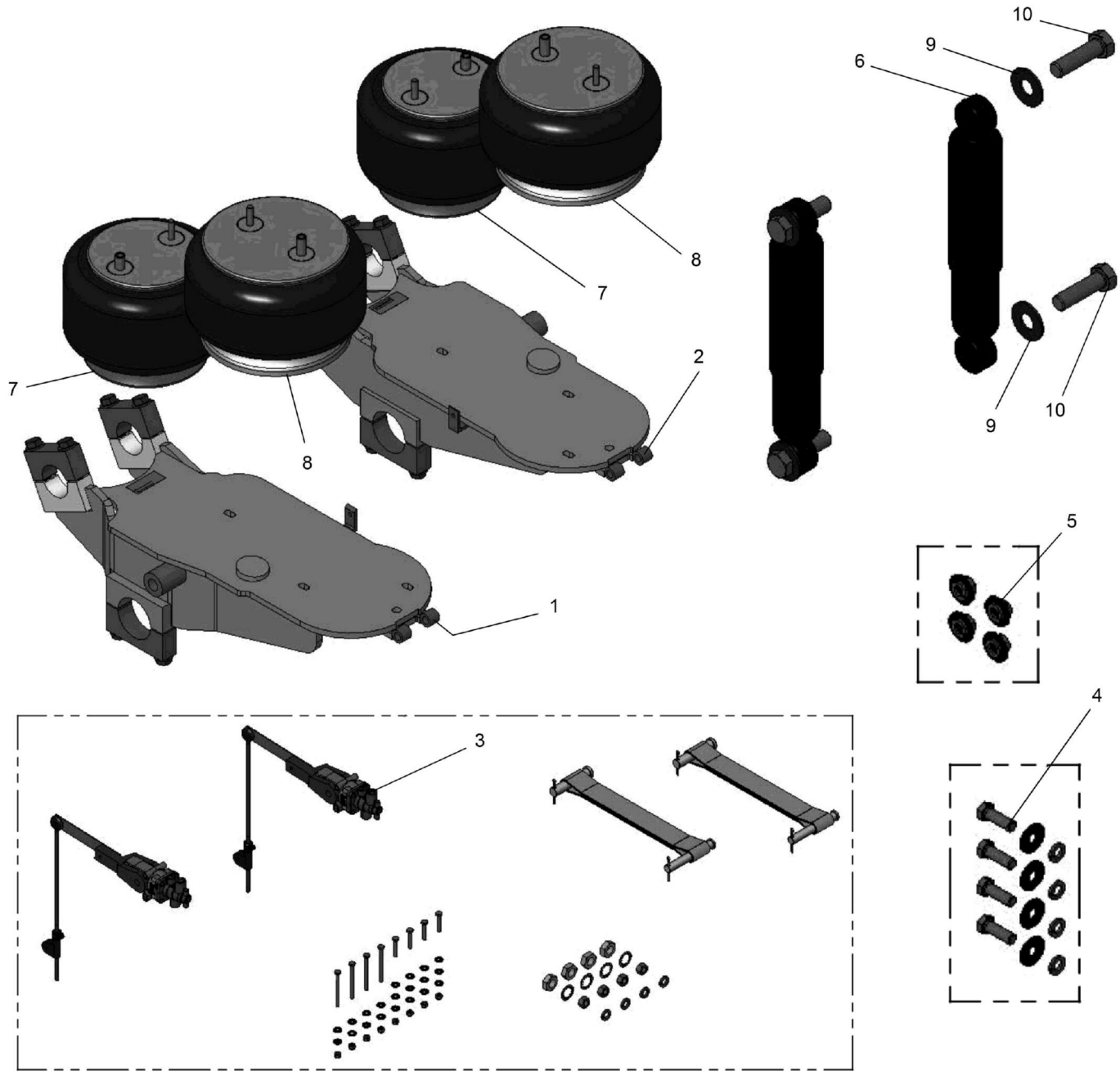

WHEN ORDERING PARTS, SPECIFY MODEL NUMBER, SERIAL NUMBER AND DESCRIPTION OF PARTS REQUIRED

LOAD KING BY CUSTOM TRUCK ONE SOURCE

LOWER SUSPENSION KIT

DATE: Released 08-2018

MODEL: 480-126

PAGE: 266

CHAPTER

2

REF	PART NO.	DESCRIPTION	QTY
	718-0129 (Rev. B)	*Lower Suspension Kit*	
1	219046	Trailing ARM, RR, Left (10", 7")	1
2	219045	Trailing ARM, RR, Right (10", 7")	1
3	**219123***	Air/Restraint Assembly (see page 268)	1
3A	**228476***	Restraint Strap Kit (see page 270)	1
3B	**228477***	Air/Restraint Kit (see page 271)	1
4	223391	Bolt Kit AL-600, Air Spring	1
5	223392	Installation Accessories	1
6	219047	Shock	2
7	218670	Air Spring, Rolling Lobe	2
8	218671	Air CNTRL - Air Spring, Rolling Lobe (Powder Coated Base)	2
9	223393	Washer, Flat, USS (Ø1") Bare	4
10	223394	Bolt, HEX Head, GR8, UNC (Ø1" X 3 1/2") Black	4

SEE NOTES IN THEIR RESPECTIVE PAGES

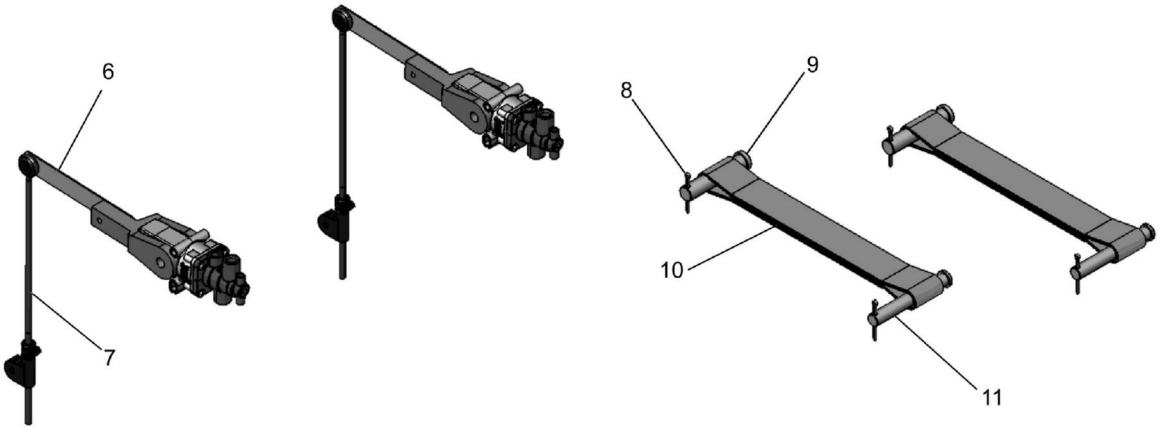

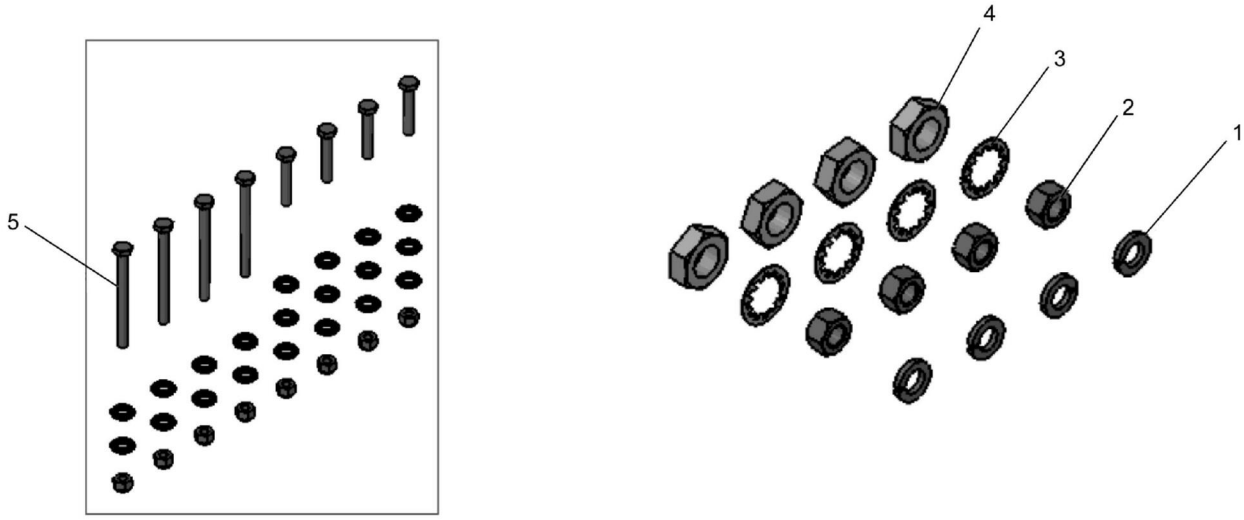

WHEN ORDERING PARTS, SPECIFY MODEL NUMBER, SERIAL NUMBER AND DESCRIPTION OF PARTS REQUIRED

REF	PART NO.	DESCRIPTION	QTY
	219123* (Rev. 00)	*Air/Restraint Assembly*	
1	228478	Washer, Lock, SAE, (Ø1/2")	4
2	228479	Nut, HEX, UNC (Ø1/2")	4
3	228480	3/4" Internal Tooth Lock Washer	4
4	228481	3/4" NF Jam Nut	4
5	228482	HCV Bolts & Washers	1
6	228483	Valve, Height Control	2
7	228484	Linkage, HCV	2
8	228485	Pin, Cotter (Ø1/8" X 1 3/4")	4
9	228486	Pin, Clevis, Zinc Plated (Ø3/4" X 3 1/2")	2
10	228487	Restraint Strap, Double Eye, No Plate (13.5")	2
11	228488	Pin, Clevis, Zinc Plated (Ø5/8" X 4 1/2")	2

* This kit has been revised to meet the current design upgrade. Therefore, this kit will only be applicable for part & service for units built after Load King order number 125000 R218.This kit will not apply retroactively.

WHEN ORDERING PARTS, SPECIFY MODEL NUMBER, SERIAL NUMBER AND DESCRIPTION OF PARTS REQUIRED

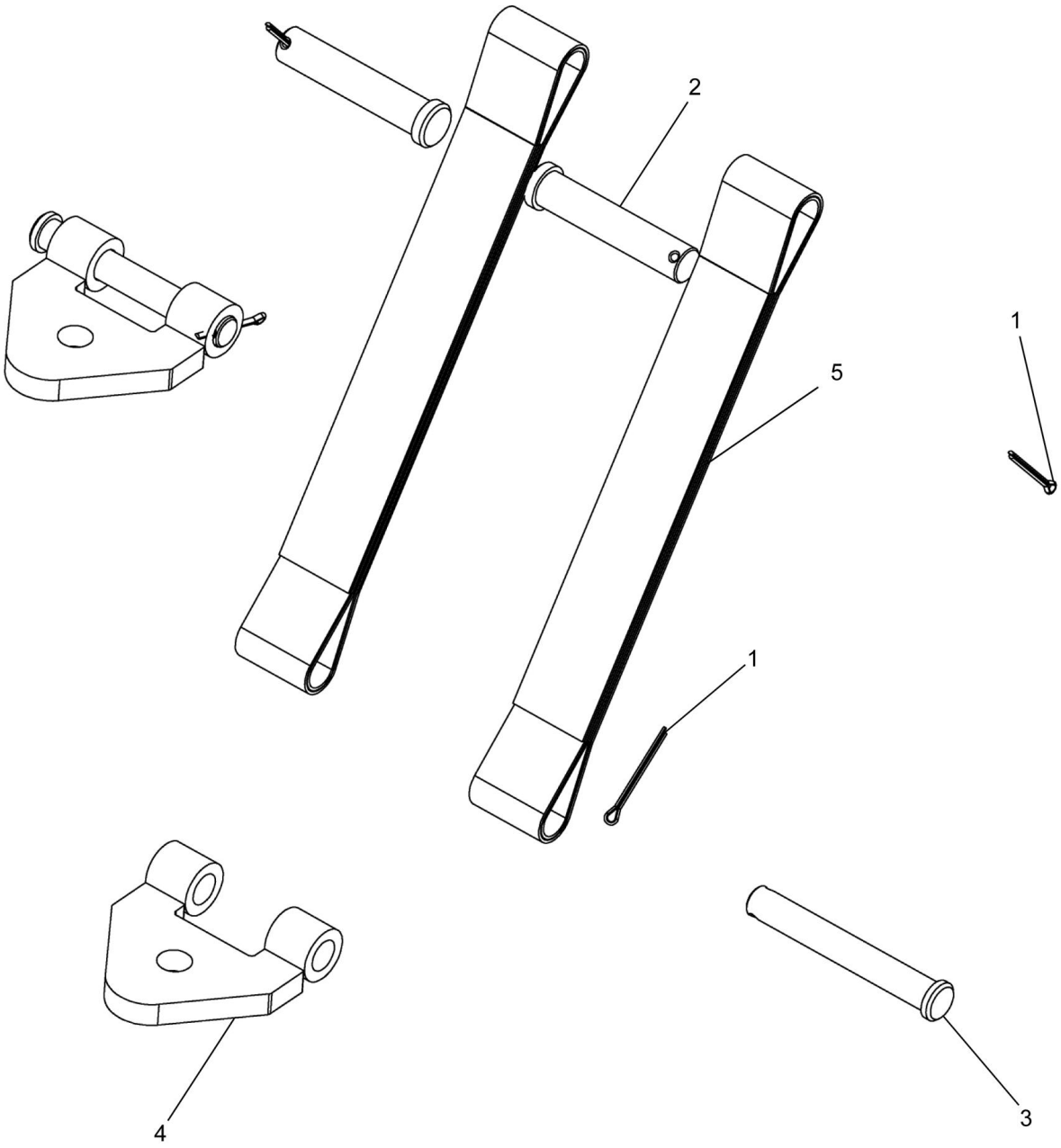

REF	PART NO.	DESCRIPTION	QTY
	228476* (Rev. 00)	*Restraint Strap Kit*	
1	228485	Pin, Cotter (Ø1/8" X 1 3/4")	4
2	228486	Pin, Clevis, Zinc Plated (Ø3/4" X 3 1/2")	2
3	228488	Pin, Clevis, Zinc Plated (Ø5/8" X 4 1/2")	2
4	228489	Bracket - Restraint Strap	2
5	228487	Restraint Strap, Double Eye, No Plate (13.5")	2

*This kit was created to retrofit any suspension built prior to Load King order number 125000 R218 where the current strap kit (219049) is failing. Load King customers buying this kit must be made aware that welding is required to secure the lower bracket to the trailing arm.

WHEN ORDERING PARTS, SPECIFY MODEL NUMBER, SERIAL NUMBER AND DESCRIPTION OF PARTS REQUIRED

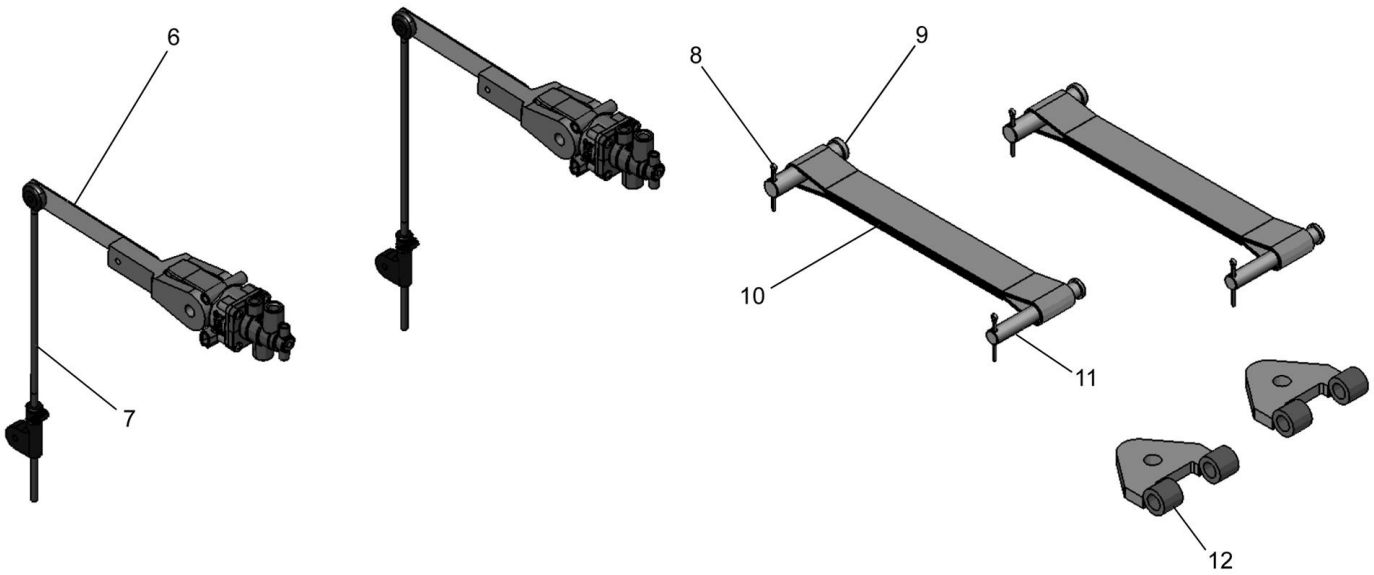

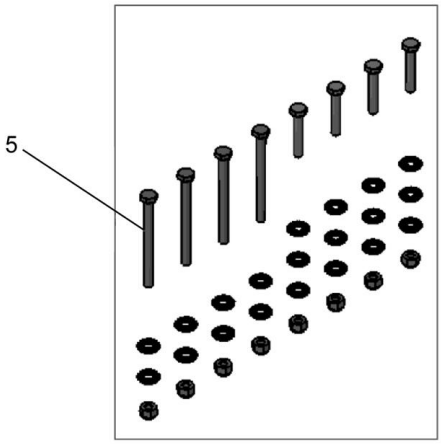

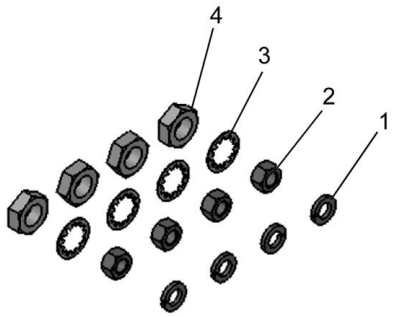

WHEN ORDERING PARTS, SPECIFY MODEL NUMBER, SERIAL NUMBER AND DESCRIPTION OF PARTS REQUIRED

REF	PART NO.	DESCRIPTION	QTY
	228477* (Rev. 00)	*Air/Restraint Kit*	
1	228478	Washer, Lock, SAE, (Ø1/2")	4
2	228479	Nut, HEX, UNC (Ø1/2")	4
3	228480	3/4" Internal Tooth Lock Washer	4
4	228481	3/4" NF Jam Nut	4
5	228482	HCV Bolts & Washers	1
6	228483	Valve, Height Control	2
7	228484	Linkage, HCV	2
8	228485	Pin, Cotter (Ø1/8" X 1 3/4")	4
9	228486	Pin, Clevis, Zinc Plated (Ø3/4" X 3 1/2")	2
10	228487	Restraint Strap, Double Eye, No Plate (13.5")	2
11	228488	Pin, Clevis, Zinc Plated (Ø5/8" X 4 1/2")	2
12	228489	Bracket - Restraint Strap	2

* This is the kit needed to replace 219123 kit for units produced before Load King order number 125000 R218. This will include the new restraint strap system with the lower bracket needed to upgrade older trailing arms to accommodate the new strap. This kit will require that the end user completes the welding of the bracket to the trailing arm.

WHEN ORDERING PARTS, SPECIFY MODEL NUMBER, SERIAL NUMBER AND DESCRIPTION OF PARTS REQUIRED

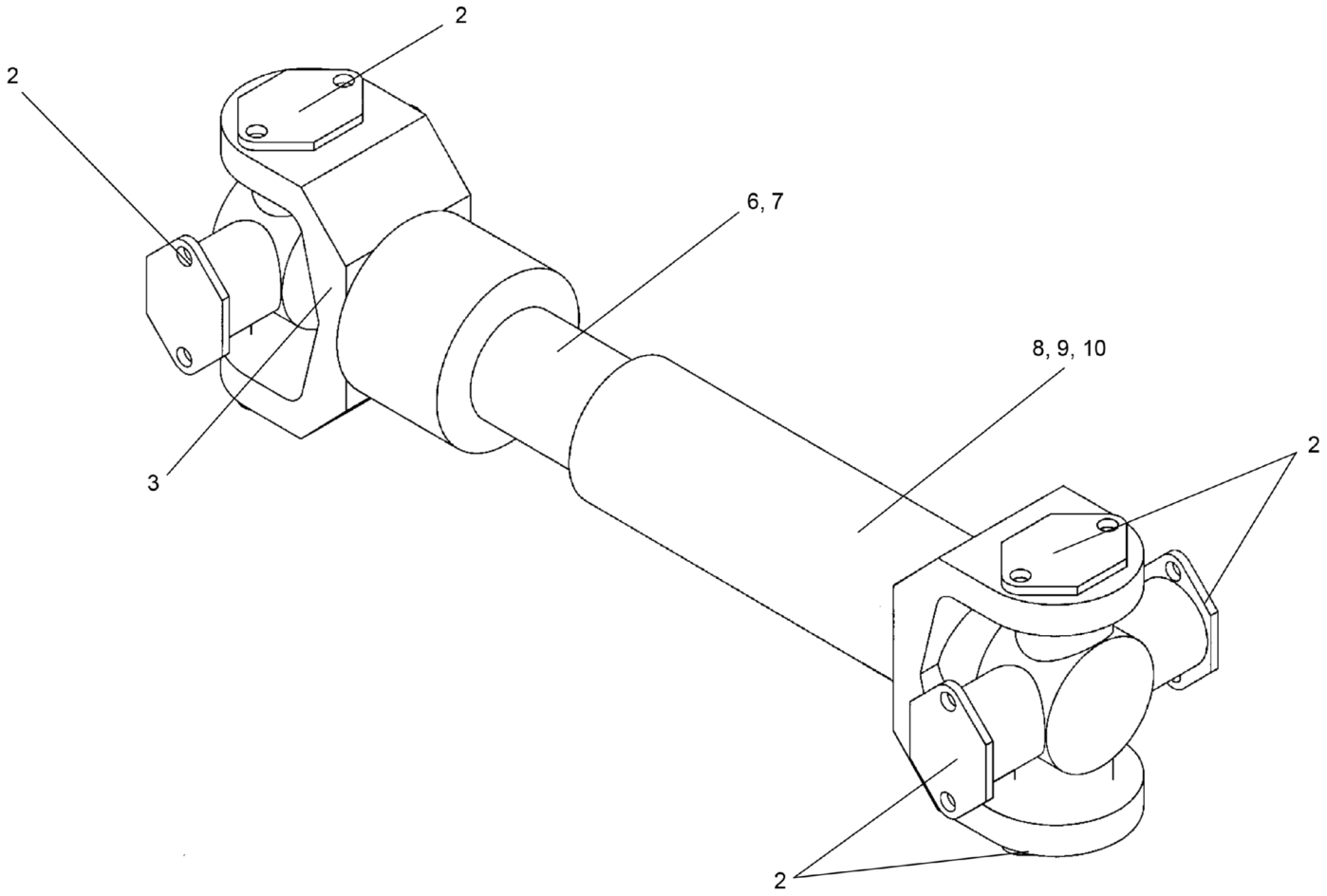

WHEN ORDERING PARTS, SPECIFY MODEL NUMBER, SERIAL NUMBER AND DESCRIPTION OF PARTS REQUIRED

REF	PART NO.	DESCRIPTION	QTY
	718-0142 (Rev. A)	*Drive Shaft, Inter-Axle*	
	216310	Cross & Bearing Kit (Includes Items 1 through 3)	
	216313	Service Shaft Assembly (Includes Items 8 Through 10)	
1*	216315	Screw	2
2	216316	Bearing Assembly	8
3	216320	Journal Cross Assembly	2
4*	216319	Lock Wire	2
5*	216321	Lube Fitting	1
6	216337	Slip Yoke	1
7	216338	Seal	1
8	216339	Tube Shaft	1
9	216340	Tube	1
10	216341	Tube Yoke	1

* ITEM NOT SHOWN IN ILLUSTRATION

WHEN ORDERING PARTS, SPECIFY MODEL NUMBER, SERIAL NUMBER AND DESCRIPTION OF PARTS REQUIRED

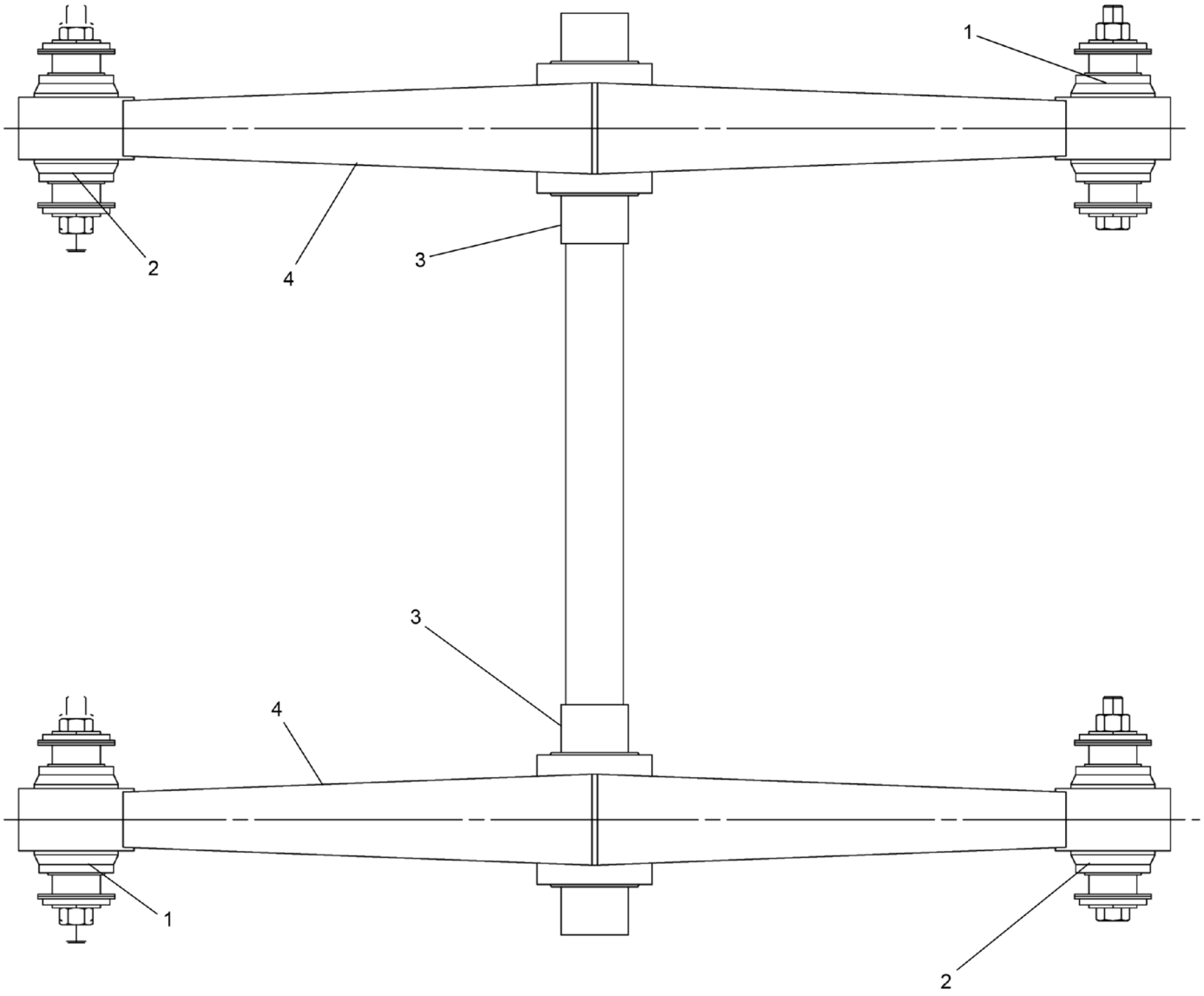

REF	PART NO.	DESCRIPTION	QTY
	718-0146 (Rev. A)	*Beam Kit 54.00*	
1	225440	Bushing & Adapter ASSY	2
2	225233	Bushing & Adapter ASSY	2
3	225441	380 Series Center Bushing	2
4	225442	54" Walking Beam	2

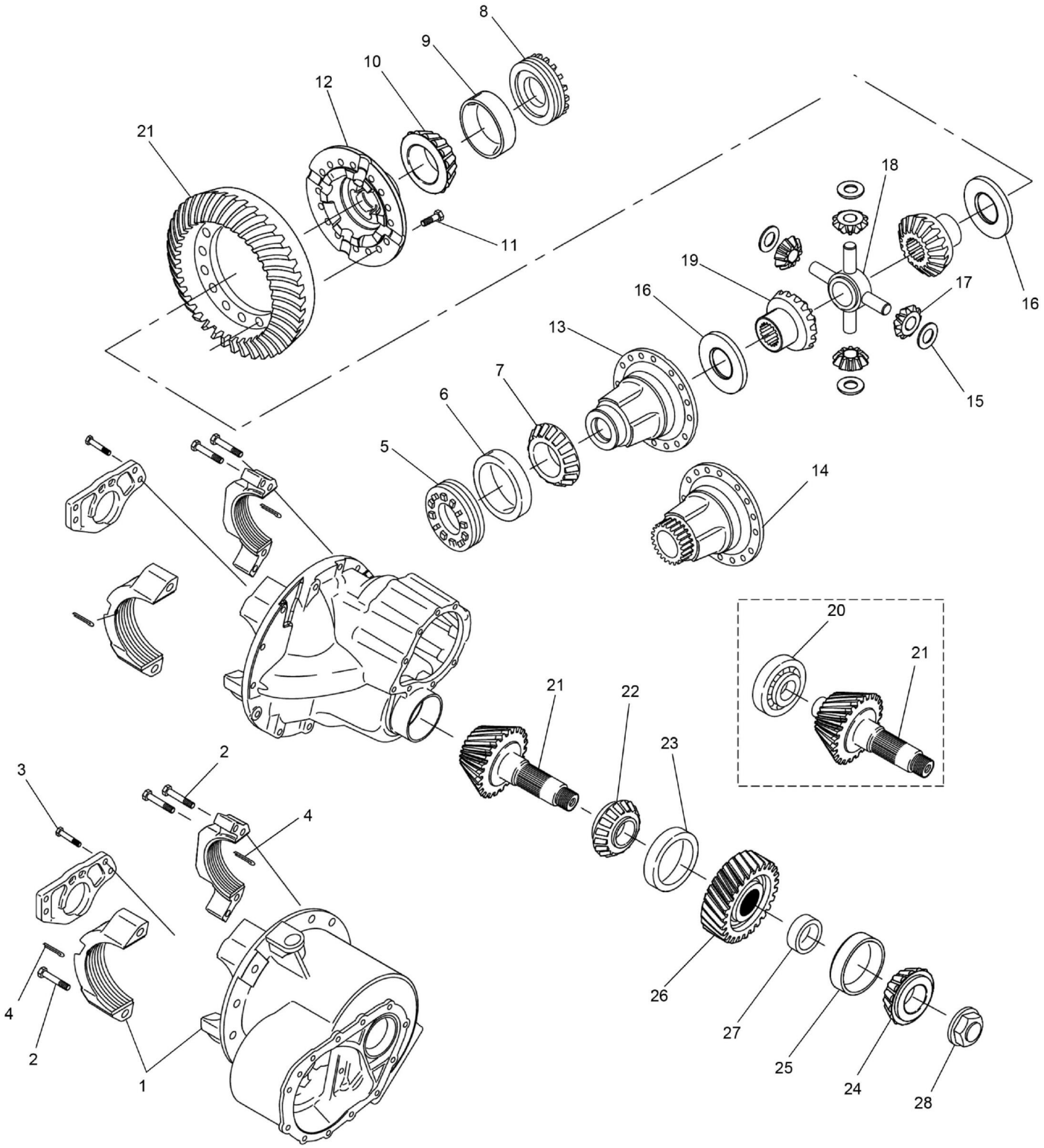

WHEN ORDERING PARTS, SPECIFY MODEL NUMBER, SERIAL NUMBER AND DESCRIPTION OF PARTS REQUIRED

LOAD KING BY CUSTOM TRUCK ONE SOURCE

AXLE, FORWARD REAR

DATE: Released 08-2018

MODEL: 480-126

PAGE: 276

CHAPTER 2

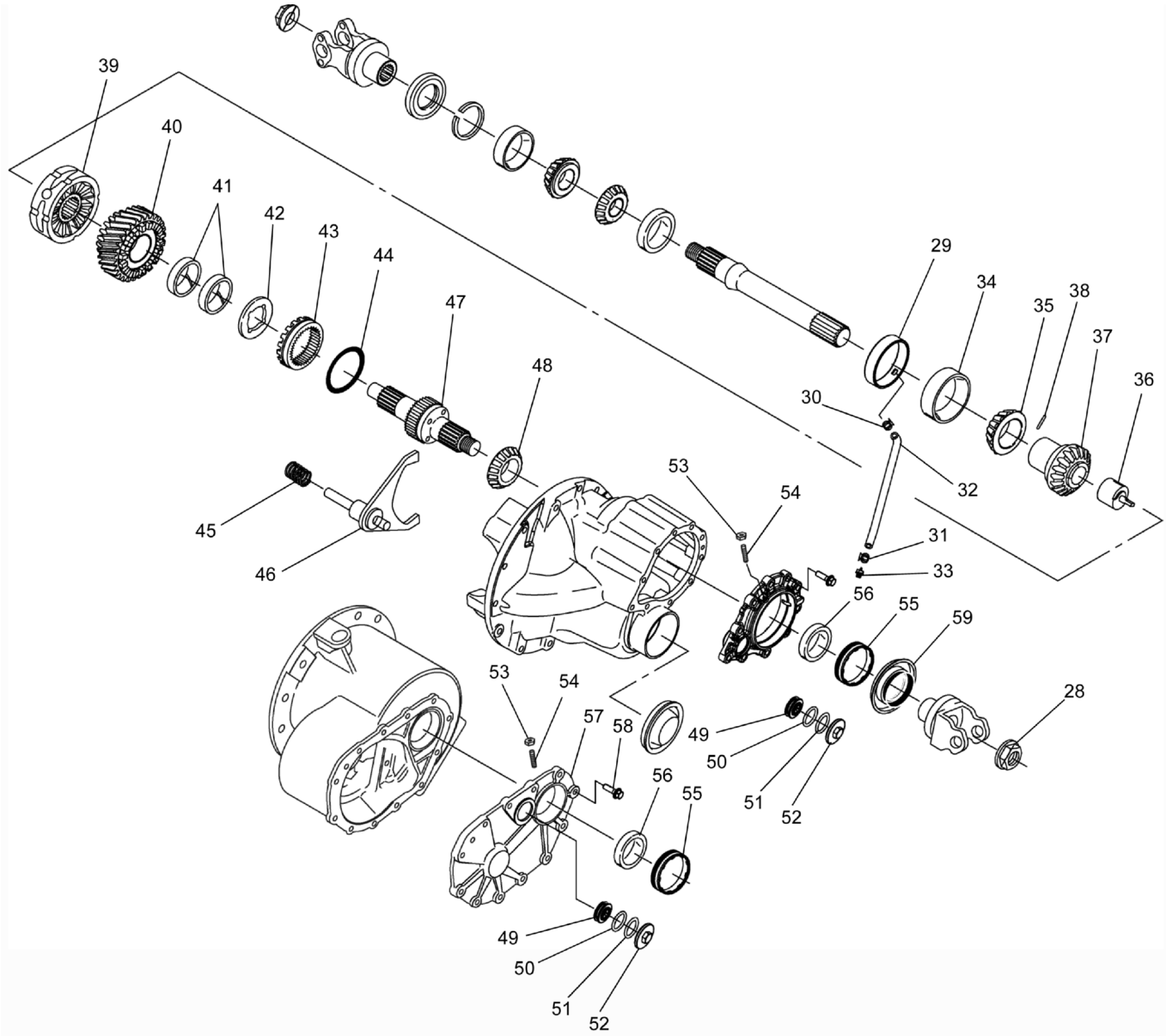
39
40
41
42
43
44
47
48
29
34
35
38
37
36
30
32
45
46
53
54
31
33
56
55
59
28
53
54
57
58
49
50
51
52
56
55
49
50
51
52

REF	PART NO.	DESCRIPTION	QTY
	T133542 (Rev. A)	*Axle, FWD Rear*	
	227847	Bearing Kit (Includes items 6, 7, 9, 10, 20 , 22 thru 25, 34, 35, 44, 48, 56 & 59)	1
	227858	Kit - Ring Gear Bolt	1
	227862	Kit-Wheel Diff Side Gear W/Washers (Includes 15 thru 20)	Ref
	227878	Manifold Parts Kit (Includes 29 thru 33)	1
	227886	Kit-Output Gear & Lube Pump (Includes 36 thru 38)	1
	227896	Kit - Shift Fork & Spring (Includes 45-46)	1
	227899	Kit-Input Shaft-Pump (Includes 47, 28 & 60)	1
	227902	Kit - Air Lockout Repair (Includes 49 thru 52)	1
	227910	Kit - Input Cover (Includes 48 & 53 thru 58)	1
	227913	Kit-Input Seal & Locknut (Includes 59 & 60)	1
	227876	Kit-Pinion Nut (includes item 59)	1
1	227848	Carrier Sub-ASSY	1
2	227849	Capscrew - Bearing Cup	6
3	227850	Capscrew - Pilot Bearing Web	4
4	227851	Cotter Pin	2
5	227852	Bearing Adjuster - Plain Half	1
6	227853	Bearing Cup - Plain Half Diff	1
7	227854	Bearing Cone - Plain Half Diff	1
8	227855	Bearing Adjuster - Flange Half	1
9	227856	Bearing Cup - Diff Flange Half	1
10	227857	Bearing Cone - Diff Flange Half	1
11	227859	Bolt - Ring Gear	16
12	227860	Diff Case - Flange Half	1
13	227861	Diff Case - Plain Half - Diff Lock	1
14	227861	Diff Case - Plain Half - Diff Lock	1
15	227863	Thrust Washer - Side Pinion	4
16	227864	Thrust Washer - Side Gear	2
17	227865	Side Pinion	4
18	227866	Spider - Differential	1
19	227867	Side Gear - Differential	2
20	227868	Bearing - Pinion Pilot	1
21	227869*	Ring Gear & Pinion	1
22	227870	Bearing Cone - Inner Pinion	1
23	227871	Bearing Cup - Inner Pinion	1
24	227872	Bearing Cone - Outer Pinion	1
25	227873	Bearing Cup - Outer Pinion	1
26	227874	Helical Gear - Pinion	1
27	227875	Kit-Pininon Bearing Spacer	A/R
28	227877	Locknut - Pinion	2
29	227879*	Manifold Assembly Pump Models	1
30	227880	Clamp	1
31	227881	Collar Lock	1
32	227882	Hose	1
33	227883	Screen Filter Assembly	1
34	227884	Bearing Cup-Output Side Gear	1
35	227885	Bearing Cone-Output Side Gear	1
36	227887*	Pump-Lube	1
37	227888	Output Side Gear Pump Models	1

* ITEM NOT SOLD SEPARATELY
** ITEMS NOT SHOWN IN ILLUSTRATION

WHEN ORDERING PARTS, SPECIFY MODEL NUMBER, SERIAL NUMBER AND DESCRIPTION OF PARTS REQUIRED

REF	PART NO.	DESCRIPTION	QTY
	T133542 (Rev. A)	*Axle, FWD Rear*	
38	227889	Pin	1
39	227890	Inter-Axle Differential	1
40	227891	Helical Side Gear & Bushing ASSY	1
41	227892	Bushing - Helical Gear	2
42	227893	Thrust Washer	1
43	227894	Sliding Clutch	1
44	227895	V-Ring	1
45	227897	Compression Spring	1
46	227898*	Shift Fork Assembly	1
47	227900*	Input Shaft	1
48	227901*	Bearing Cone-Input Shaft	1
49	227903	Piston	1
50	227840	O-Ring - Piston	1
51	227841	O-Ring Cover	1
52	227842	Piston Cover	1
53	227906	Nut - Adjuster Stud	1
54	227907	Stud - Adjuster	1
55	227908	Input Adjuster & Cup ASSY	1
56	227909*	Bearing Cup - Input Adjuster	1
57	227911*	Input Cover	1
58	227912	Capscrew - Input Cover	12
59	227914	Input Seal	1
60**	227917	Loctite Adhesive .5ml tube	1
61**	227918	RTV Sealant - 3OZ	1

* ITEM NOT SOLD SEPARATELY
** ITEMS NOT SHOWN IN ILLUSTRATION

WHEN ORDERING PARTS, SPECIFY MODEL NUMBER, SERIAL NUMBER AND DESCRIPTION OF PARTS REQUIRED

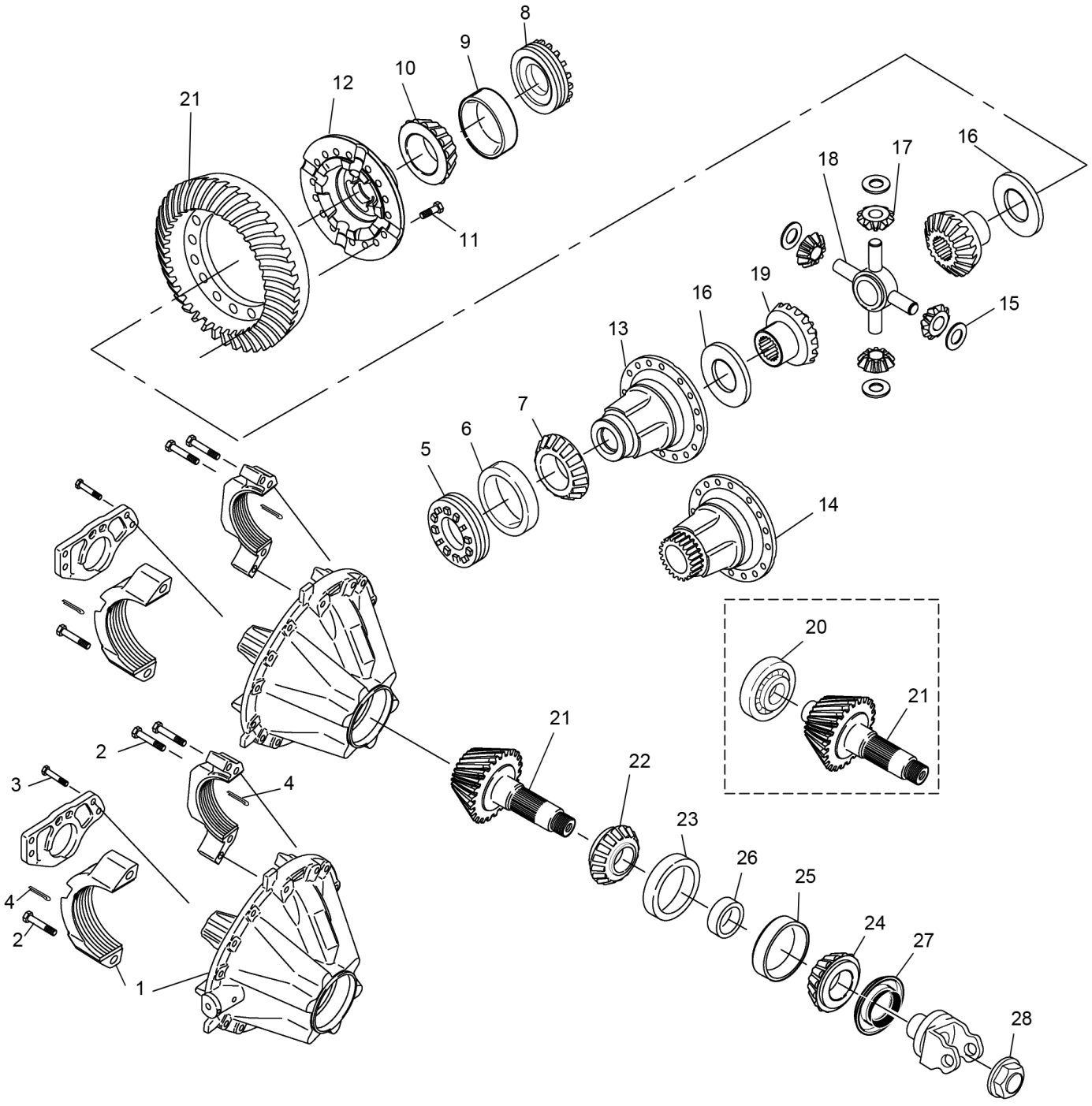

WHEN ORDERING PARTS, SPECIFY MODEL NUMBER, SERIAL NUMBER AND DESCRIPTION OF PARTS REQUIRED

LOAD KING BY CUSTOM TRUCK ONE SOURCE

AXLE, RWD REAR

DATE: Released 08-2018

MODEL: 480-126

PAGE: 280

CHAPTER

2

REF	PART NO.	DESCRIPTION	QTY
	T133544 (Rev. A)	*Axle, RWD Rear*	
	227936	Bearing Kit (Includes items 6 thru 7, 9-10, 12, 20, 22 thru 25, 27 thru 30)	1
	227858	Kit - Ring Gear Bolt	1
	227862	Kit-Wheel Diff Side Gear W/Washers (Includes 15 thru 20)	A/R
	227913	Kit-Input Seal & Locknut (Includes 59 & 60)	1
	227876	Kit-Pinion Nut (includes item 59)	1
1	227938	Carrier Sub-ASSY	1
2	227849	Capscrew - Bearing Cup	6
3	227850	Capscrew - Pilot Bearing Web	4
4	227851	Cotter Pin	2
5	227852	Bearing Adjuster - Plain Half	1
6	227853	Bearing Cup - Plain Half Diff	1
7	227854	Bearing Cone - Plain Half Diff	1
8	227855	Bearing Adjuster - Flange Half	1
9	227856	Bearing Cup - Diff Flange Half	1
10	227857	Bearing Cone - Diff Flange Half	1
11	227859	Bolt - Ring Gear	16
12	227868	Bearing - Pinion Pilot	1
13	228023	Diff Case - Plain Half - Diff Lock	1
14	228023	Diff Case - Plain Half - Diff Lock	1
15	227863	Thrust Washer - Side Pinion	4
16	227864	Thrust Washer - Side Gear	2
17	227865	Side Pinion	4
18	227866	Spider - Differential	1
19	227867	Side Gear - Differential	2
20	227868	Bearing - Pinion Pilot	1
21	228024	Ring Gear & Drive Pinion Set	1
22	227870	Bearing Cone - Inner Pinion	1
23	227871	Bearing Cup - Inner Pinion	1
24	227937	Bearing Cone - Outer Pinion	1
25	227871	Bearing Cup - Inner Pinion	1
26	227939	Kit - Pinion Bearing Spacer	A/R
27	227914	Input Seal	1
28	227877	Locknut - Pinion	1
29*	227917	Loctite Adhesive .5ml tube	1
30*	227918	RTV Sealant - 3OZ	1

* ITEM NOT SHOWN IN ILLUSTRATION

WHEN ORDERING PARTS, SPECIFY MODEL NUMBER, SERIAL NUMBER AND DESCRIPTION OF PARTS REQUIRED

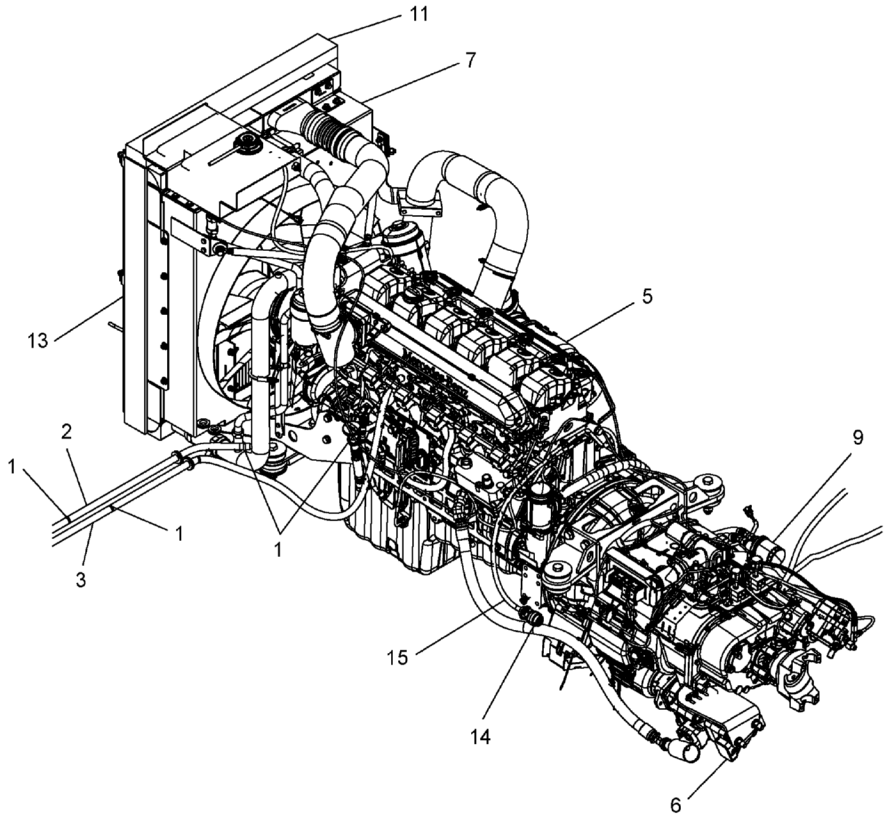

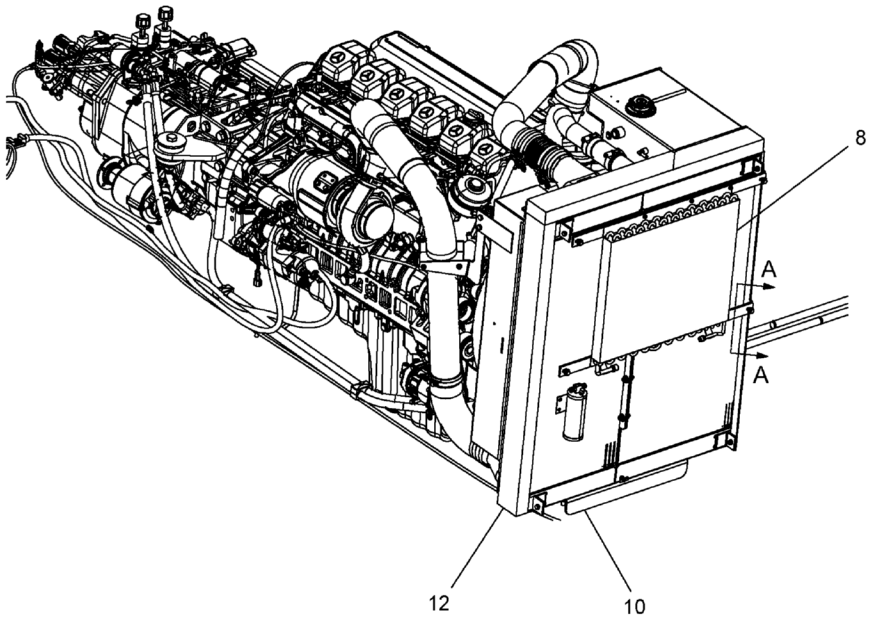

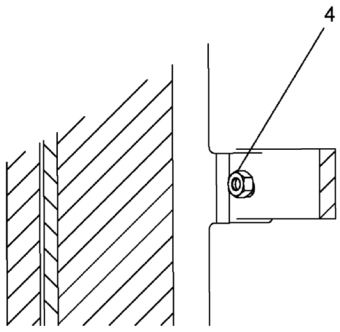

SECTION A - A

REF	PART NO.	DESCRIPTION	QTY
	T156048 (Rev. A)	*T5/T7 Engine Installation, OM460, 2017*	
1	1240-259	Clamp SZ 10, Stainless	4
2	1276-1-48	Hose, Heater, -10, 48" LG.	1
3	1276-1-96	Hose, Heater	1
4	N04-312C000-25	Nut, HEX 0.3125-18, ST Z GR5	4
5	**T132941**	Engine GP-MB 460 (see page 284)	1
6	**T133920**	Pump/PTO Assembly (see page 323)	1
7	**T134265**	Cooling Assembly (see page 332)	1
8	**T135514**	Kit, AC System-MB460 (see page 338)	1
9	**T135777**	Transmission Filter Assembly (see page 346)	1
10	**T136319**	Mounting, Export Engine (see page 348)	1
11	T139127	Foam, Radiator	1
12	T139128	Foam, Radiator	1
13	T139129	Foam, Radiator	1
14	T150388	Harness, Transmission, Ultrashift, 2017	1
15	T154159	Harness, Engine, OM460, 2017	1

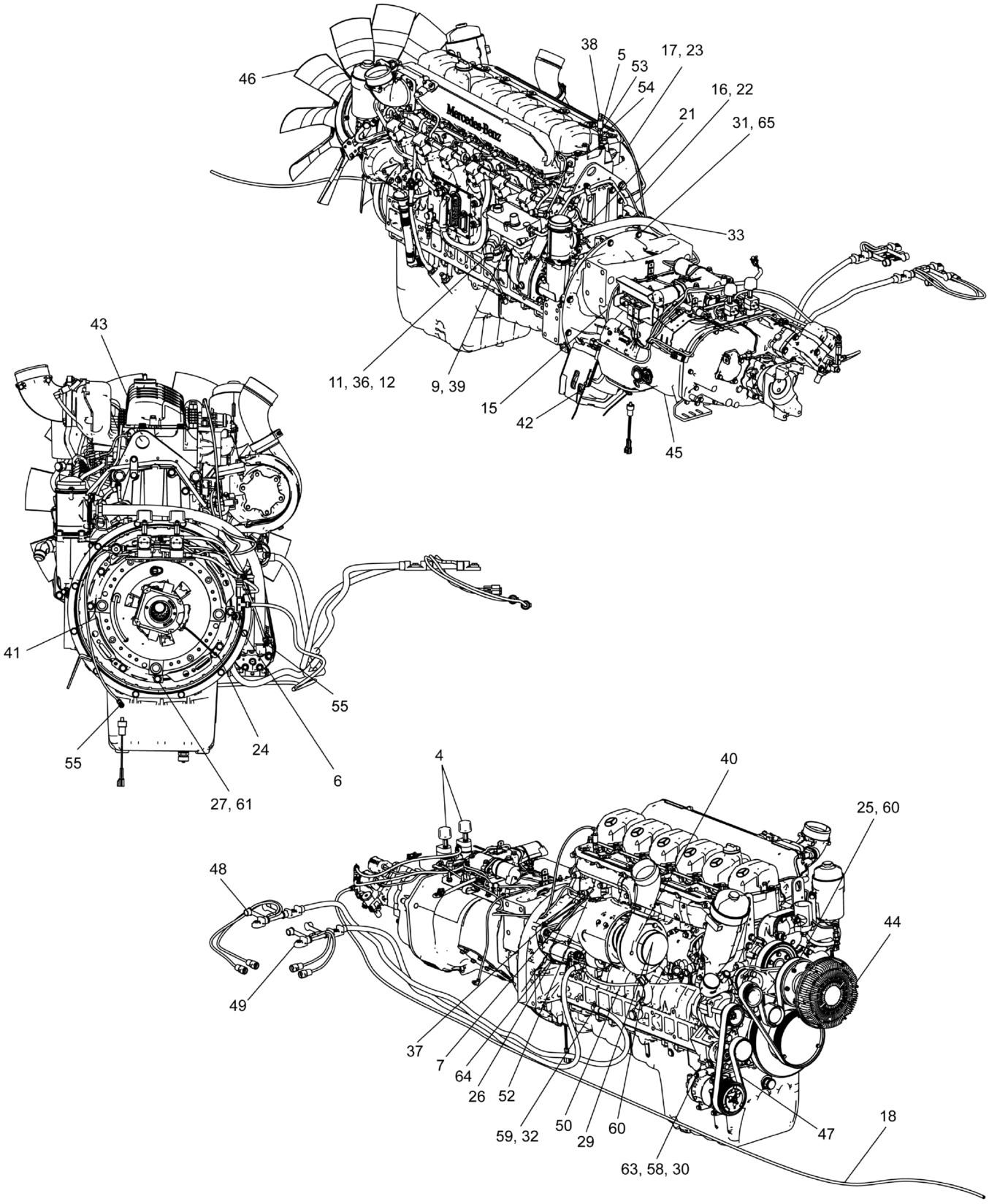

WHEN ORDERING PARTS, SPECIFY MODEL NUMBER, SERIAL NUMBER AND DESCRIPTION OF PARTS REQUIRED

LOAD KING BY CUSTOM TRUCK ONE SOURCE

ENGINE ASSEMBLY - EXPORT 460HP, MERCEDES-BENZ ENGINE

DATE: Released 08-2018

MODEL: 480-126

PAGE: 284

CHAPTER 2

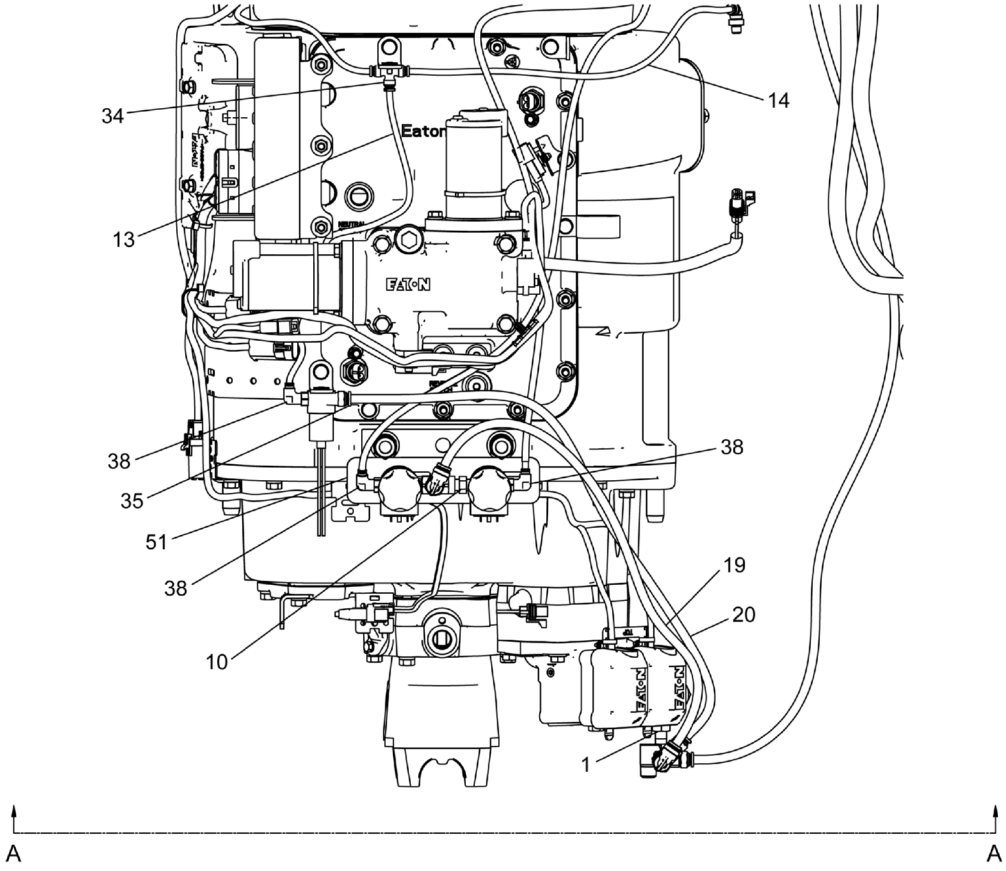
34
13
38
35
51
38
10
14
38
19
20
1
A
A

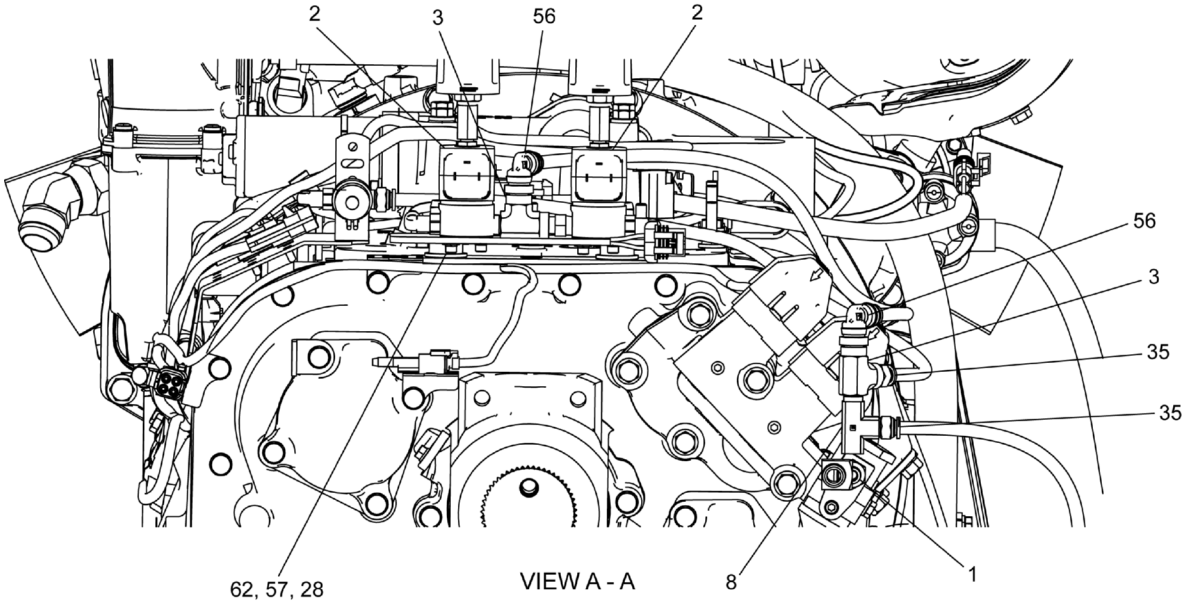
2
3
56
2
56
3
35
35
62, 57, 28
VIEW A - A
8
1

REF	PART NO.	DESCRIPTION	QTY
	T132941 (Rev. F)	*Engine GP-MB 460*	
1	12019-461	Adapter, MNPT-6/MNPT-4	1
2	12019-910	Air Valve	2
3	12019-911	Tee	2
4	1213-52	Breather 1/4 NPT	2
5	1219-130	Pipe Coupling 0.25 NPSC	1
6	1219-157	Adapter 90°	1
7	1219-4	Adapter, 90°	1
8	1219-516	Tee, FNPT-4/FNPT-4/FNPT-4	1
9	1219-570	Elbow, 90, FJIC-8SW/MJIC-8	1
10	1219-954	Adapter, MNPT-4/MNPT-4	1
11	1219-957	Elbow, 90, MJIC-16/FJIC-16SW	1
12	1219-958	Adapter, 45, MJIC-16/FJIC-16SW	1
13	12202-1-16	Tubing, -4, Black, 16" LG	1
14	12202-1-22	Tubing, -4, Black, 22" LG	1
15	12202-1-25	Tubing, -4, Black, 25" LG	1
16	12202-1-50	Tubing, -4, Black, 50" LG	1
17	12202-1-55	Tubing, -4, Black, 55" LG	1
18	12203-1-150	Tubing, -6, Black, 150" LG	1
19	12203-1-23	Tubing, -6, Black, 23" LG	1
20	12203-1-26	Tubing, -6, Black, 26" LG	1
21	1240-15	Hose-Clamp 3/4"	1
22	1266-1-50	Loom, Black, 50" LG.	1
23	1266-1-55	Loom, Black, 55" LG.	1
24	717-0803-14	Grease Hose - 14" LG	1
25	N24-08BM000-28	Nut, HEX M8-1.25, DIN934, STZ CL	6
26	N24-508X000-28	Nut, HEX M5-0.8, DIN934, STZ CL8	1
27	S01-438CB50-Y8	SCR, HHCS 0.4375-14 X 2.50, ST YZ G8	8
28	S14-190F625-H2	SCR, SHCS 10-32 X 0.625, ST Z	4
29	SMF-08BM020-28	SCR, HHCS M8-1.25 X 20 FT, ST Z 8.8	3
30	SMF-10CM025-28	SCR, HHCS M10-1.5 X 25 FT, ST Z 8.8	3
31	SMF-10CM040-29	SCR, HHCS M10-1.5 X 40 FT, ST Z 10.9	12
32	SMF-12DM020-28	SCR, HHCS M12-1.75 X 20 FT, ST SQC C8.8	1
33	T113470	Hose, Breather	1
34	T116558	Tee, PTC, -4 Tube	1
35	T116916	Adapter, Male, -6 Tube, -4 Pipe	3
36	T116925	Adapter, MJIC-16/MM26 X 1.5	1
37	T118087	Adapter, Brake, -4 Tube -2 Pipe	1
38	T118090	Elbow, 90, MNPT-4SW/PTC-4	4
39	T118745	Adapter, 3/4-16 UNF, M18 X 1.5	1
40	**T121441**	Block Heater ASSY, 240V (see page 288)	1
41	T126166	Clutch	1
42	T127504	Bracket	1
43	T132942	Engine, MB OM 460 LA	1
44	T134047	Drive, Fan MB460	1
45	**T134131**	Transmission, Eaton (see page 289)	1
46	T135293	Cooling Fan	1
47	T135623	Belt, Alternator/AC	1
48	T139022	Cable, 2-Battery, Negative	1
49	T139023	Cable, 2-Battery, Positive	1

REF	PART NO.	DESCRIPTION	QTY
	T132941 (Rev. F)	*Engine GP-MB 460*	
50	T139196	Alternator Cable, Positive	1
51	T142778	Bracket, Air Valve	1
52	T142801	Adapter, EO6LSW/MNPT-2	1
53	T142802	Adapter, EO8LSW/MNPT-4	1
54	T142803	Elbow, 90, EO8LSW/EO8L	1
55	T145513	Elbow, 90°, PTC-4-2	2
56	T145514	Elbow, 90°, PTC-6-4	2
57	W07-190X000-20	WSH, LCK, MED SPLT 10, ST SQC	4
58	W16-010X000-G2	WSH, Lock, SPLT M10 D127B, ST Z	3
59	W16-012X000-G2	WSH, Lock, SPLT M12 D127B, ST Z	1
60	W16-80MX000-G2	WSH, Lock, SPLT M8 D127B, ST Z	9
61	WAH-43NX000-20	WSH, FL HRD A-NRW 0.4375, ST SQC	8
62	WAR-190X000-22	WSH, FL TYPA-REG 10, ST SQC G2	4
63	WMF-010X000-20	WSH, Flat M10 DIN125, ST SQC	3
64	WMF-50MX000-20	WSH, Flat M5 DIN 125, ST Z	1
65	WMH-010X000-20	WSH, Flat, Hard M10 D125, ST SQC	12

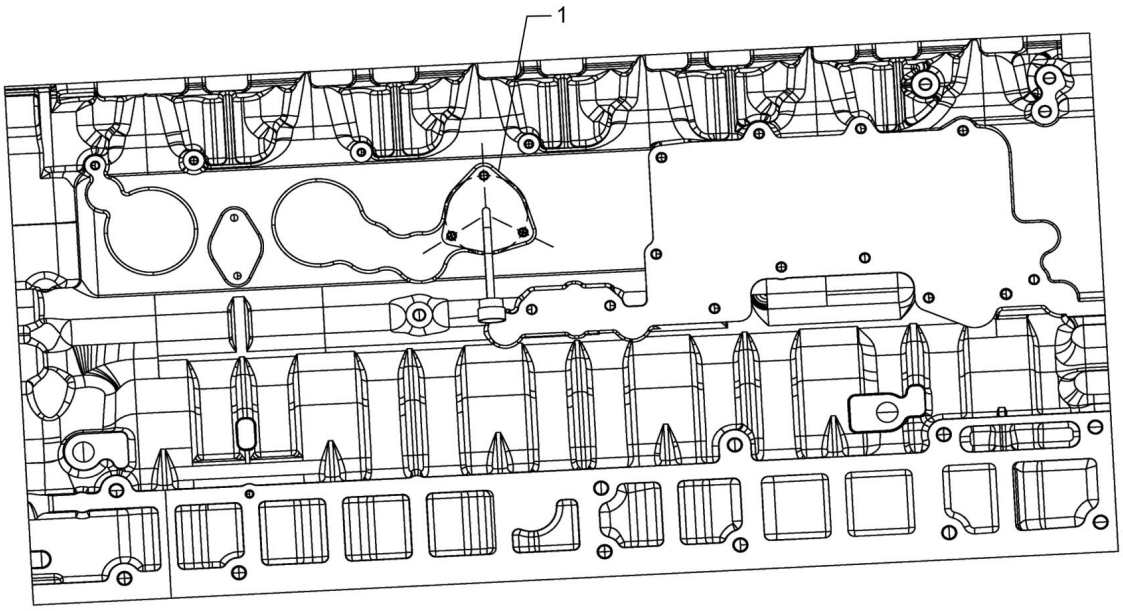

REF	PART NO.	DESCRIPTION	QTY
	T121441 (Rev. A)	*Block Heater ASSY, 240V*	
1	T121446	Engine Block Heater, 240V	1



WHEN ORDERING PARTS, SPECIFY MODEL NUMBER, SERIAL NUMBER AND DESCRIPTION OF PARTS REQUIRED

REF	PART NO.	DESCRIPTION	QTY
	T134131 (Rev. A)	*Transmission, Eaton*	
1	**T134131_Section1***	Case (Front) (see page 291)	Ref
2	**T134131_Section2***	Case Auxiliary (see page 293)	Ref
3	**T134131_Section3***	Shift Bar Housing (see page 295)	Ref
4	**T134131_Section4***	Auxiliary Drive Gear (see page 297)	Ref
5	**T134131_Section5***	Input Shaft & Drive Gear (see page 298)	Ref
6	**T134131_Section6***	Reverse Idler (see page 300)	Ref
7	**T134131_Section7***	Countershaft & Bearings (AUX) (see page 301)	Ref
8	**T134131_Section8***	Countershaft Assembly (see page 302)	Ref
9	**T134131_Section9***	Mainshaft & Synchro (AUX) (see page 304)	Ref
10	**T134131_Section10***	Mainshaft Assembly (see page 306)	Ref
11	**T134131_Section11***	Combination Cylinder (see page 308)	Ref
12	**T134131_Section12***	Oil Filter (see page 310)	Ref
13	**T134131_Section13***	Integral Oil Pump (see page 312)	Ref
14	**T134131_Section14***	Filter Regulator (see page 314)	Ref
15	**T134131_Section15***	Controller ECU & Harness (see page 315)	Ref
16	**T134131_Section16***	Electric Clutch Actuator (see page 316)	Ref
17	**T134131_Section17***	Heat Exchanger (see page 317)	Ref
18	**T134131_Section18***	Shift Controls (see page 319)	Ref
19	**T134131_Section19***	X-Y Shifter Module (see page 321)	Ref
20	**T134131_Section20***	Kits & Assemblies (see page 322)	Ref

* NOT PURCHASABLE AT THIS LEVEL

WHEN ORDERING PARTS, SPECIFY MODEL NUMBER, SERIAL NUMBER AND DESCRIPTION OF PARTS REQUIRED

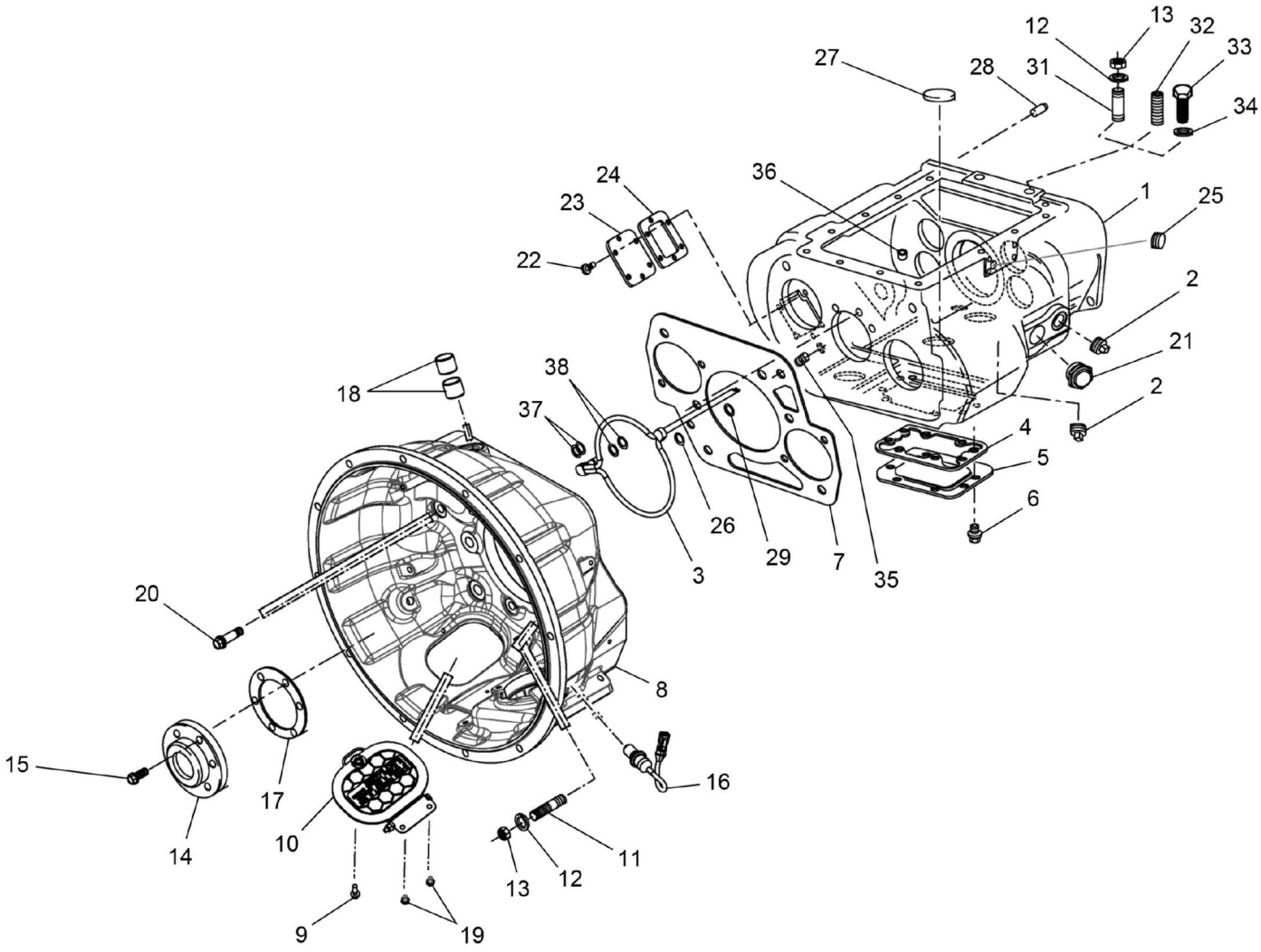

WHEN ORDERING PARTS, SPECIFY MODEL NUMBER, SERIAL NUMBER AND DESCRIPTION OF PARTS REQUIRED

LOAD KING BY CUSTOM TRUCK SOURCE	**CASE (FRONT) (TRANSMISSION)**	DATE: Released 08-2018	**CHAPTER**
		MODEL: 480-126	**2**
		PAGE: 291	

REF	PART NO.	DESCRIPTION	QTY
	T134131_Section1* (Rev. 00)	*Case (Front)*	
1	226105	Case ASSY	1
2	225642	Plug, 1-1/16" Magnetic	2
3	226106	Extended Lube Tube ASSY	1
4	225617	Gasket	1
5	225618	PTO Cover	1
6	225619	Capscrew, 7/16"-14 X 7/8"	8
7	225620	Clutch Housing Gasket	1
8	226117	Clutch Housing ASSY, Nodal	1
8A	227794	Clutch Housing ASSY, Standard	1
8B	226118	Clutch Housing Replacement Kit, Standard	1
8C	226119	Clutch Housing Replacement Kit, Nodal	1
9	226108	Capscrew, 1/4"-20 X 1-1/8"	1
10	226109	Hand Hole Cover Kit	1
11	225631	Stud	4
11A	227795	Stud, (.625 X 3.75), For LCIB	2
12	225632	Washer, 1.23 X 6.60	8
13	225633	HEX Nut, .625-18	8
14	226110	Front Bearing Cover	1
14A	226120	Input Shaft Replacement Kit	1
15	225635	Capscrew, 3/8"-16 X 1-1/4"	6
16	226111	Speed Sensor Kit, Single Pick-Up	1
17	225637	Gasket	1
18	225638	Bushing	2
19	225731	Capscrew, 1/4"-20 X 1/2"	2
20	225640	HEX Head Screw/Washer ASSY .500-13 X 1.490	6
21	227796	Sight Plug (1.625 - 12UN)	1
22	225643	Capscrew, 3/8"-16 X 3/4"	6
23	225644	PTO Cover	1
24	225645	Gasket	1
25	226113	Pipe Plug, 1/2"	1
26	226114	O-Ring	1
27	225648	Magnet	3
28	225649	Pin	2
29	226112	O-Ring	1
30**	226464	Cross-shaft Assembly Kit	1
31	225652	Stud, 5/8" X 2-3/16"	2
32	225650	Plug	2
33	225651	Capscrew, 5/8"-11 X 1-1/4"	2
34	225653	Spacer	2
35	225646	Pipe Plug, 1/2"	1
36	226116	Pin	1
37	226115	O-Ring	2
38	225864	O-Ring	2

* NOT PURCHASABLE AT THIS LEVEL
** ITEM NOT SHOWN IN ILLUSTRATION

WHEN ORDERING PARTS, SPECIFY MODEL NUMBER, SERIAL NUMBER AND DESCRIPTION OF PARTS REQUIRED

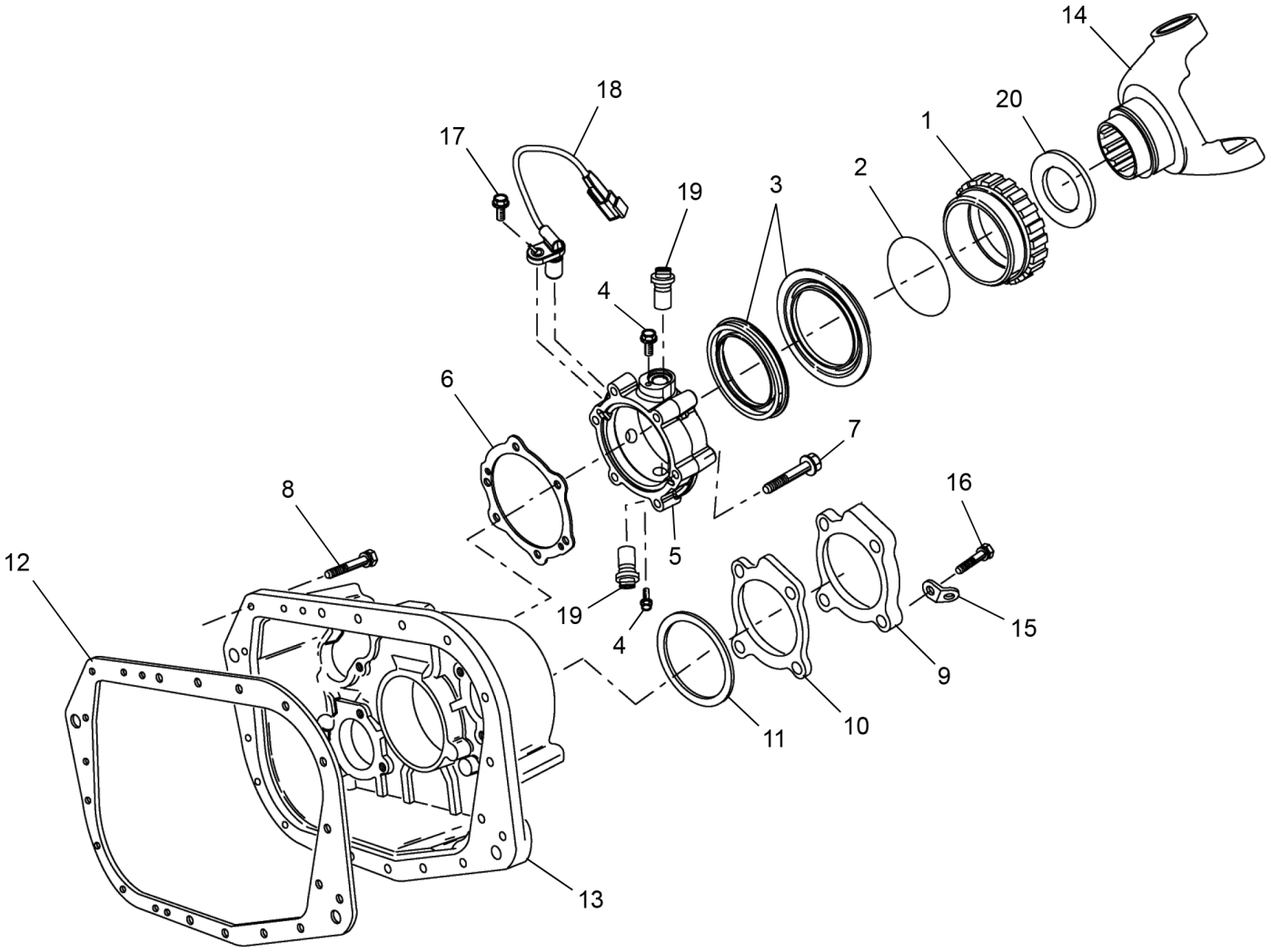
14
18
17
20
1
19
3
2
4
6
7
8
16
12
5
19
4
15
9
11
10
13

REF	PART NO.	DESCRIPTION	QTY
	T134131_Section2* (Rev. 00)	*Case Auxiliary*	
1	225654	Speedo Rotor ASSY, Magnetic	1
2	225655	O-Ring	1
3	225656	Oil Seal Kit, For Magnetic Cover	1
4	225657	Capscrew, M8 X 1.25 X 12MM	2
5	226121	Rear Bearing Cover ASSY	1
6	225659	Gasket - Red Edge Molded	1
7	225661	Capscrew, 3/8"-16 X 3-1/4"	4
7A	225662	Capscrew, 3/8"-16 X 2"	2
8	225663	Capscrew, 3/8"-16 X 1-1/2"	16
8A	225662	Capscrew, 3/8"-16 X 2"	2
8B	225677	Capscrew, 3/8"-16 X 2-3/4"	1
9	225664	Cover	2
10	227792	Gasket	2
11	225666	Shim Kit	1
12	225667	Gasket	1
13	226122	Rear Housing	1
14	226123	Yoke-1810 Half Round	1
15	225670	Lifting Eye	2
16	225635	Capscrew, 3/8"-16 X 1-1/4"	8
17	225881	Capscrew, 1/4"-20 X 5/8"	1
18	226124	Directional Speed Sensor Kit	1
19	226125	Speedo Plug Kit	2
20	225669	Shield	1

* NOT PURCHASABLE AT THIS LEVEL

WHEN ORDERING PARTS, SPECIFY MODEL NUMBER, SERIAL NUMBER AND DESCRIPTION OF PARTS REQUIRED

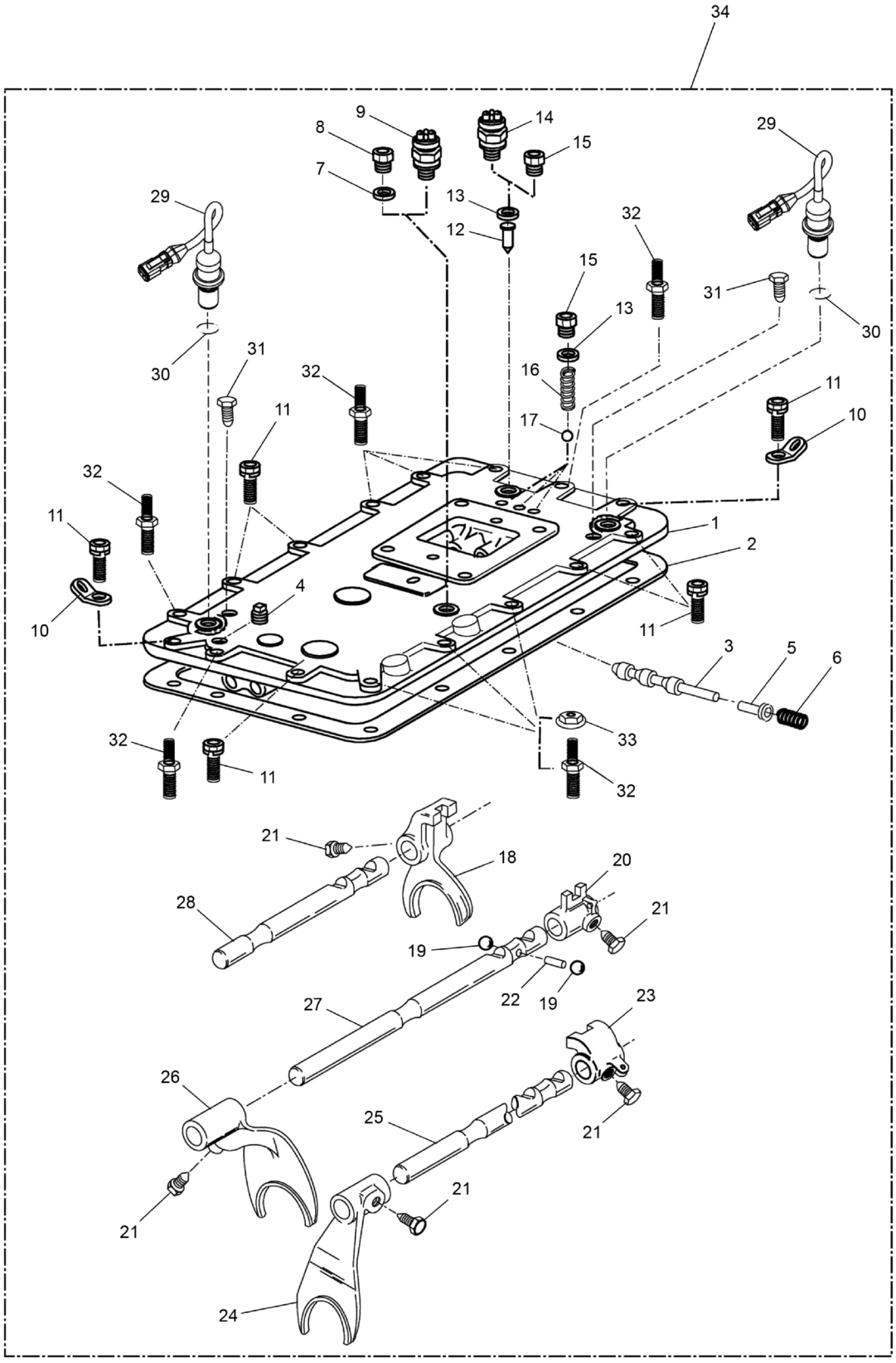

WHEN ORDERING PARTS, SPECIFY MODEL NUMBER, SERIAL NUMBER AND DESCRIPTION OF PARTS REQUIRED

LOAD KING BY CUSTOM TRUCK ONE SOURCE

SHIFT BAR HOUSING (TRANSMISSION)

DATE: Released 08-2018

MODEL: 480-126

PAGE: 295

CHAPTER 2

REF	PART NO.	DESCRIPTION	QTY
	T134131_Section3* (Rev. 00)	*Shift Bar Housing*	
1	226155	Shift Bar Housing ASSY	1
2	225726	Gasket	1
3	225730	Air Valve Shaft	1
4	225732	Pipe Plug, 3/8" NPT	1
5	226160	Plunger	1
6	226421	Spring	1
7	225737	Gasket	1
8	225738	Plug	1
9	225739	Neutral Light Switch	1
10	225670	Lifting Eye	2
11	225663	Capscrew, 3/8"-16 X 1-1/2"	5
11A	225635	Capscrew, 3/8"-16 X 1-1/4"	2
12	225740	Pin	1
13	225741	Gasket	4
14	225742	Reverse Light Switch	1
14A	227799	Reverse Light Switch, 2 Pin Plug	1
15	225743	Plug	4
16	226422	Compression Spring	3
17	225745	Steel Ball, 1/2"	3
18	226423	Shift Yoke, Reverse/1ST	1
19	225750	Steel Ball, 3/4"	2
20	225751	Shift Block, 2ND/3RD	1
21	225752	Lockscrew	5
22	225753	Interlock Pin	1
23	226388	Shift Block, 4TH/5TH	1
24	226424	Shift Yoke, 4TH/5TH	1
25	226425	Yoke Bar, 4TH/5TH	1
26	226426	Shift Yoke, 2ND/3RD	1
27	226427	Yoke Bar, 2ND/3RD	1
28	226428	Yoke Bar, Reverse/1ST	1
29	226111	Speed Sensor Kit, Single Pick-Up	2
30	225673	O-Ring	2
31	225881	Capscrew, 1/4"-20 X 5/8"	2
32	226159	Screw, 3/8 & 5/16	9
33	226157	Nut Assembly, 5/16-18	3
34	226156	Shift Bar Housing ASSY	1

* NOT PURCHASABLE AT THIS LEVEL

WHEN ORDERING PARTS, SPECIFY MODEL NUMBER, SERIAL NUMBER AND DESCRIPTION OF PARTS REQUIRED

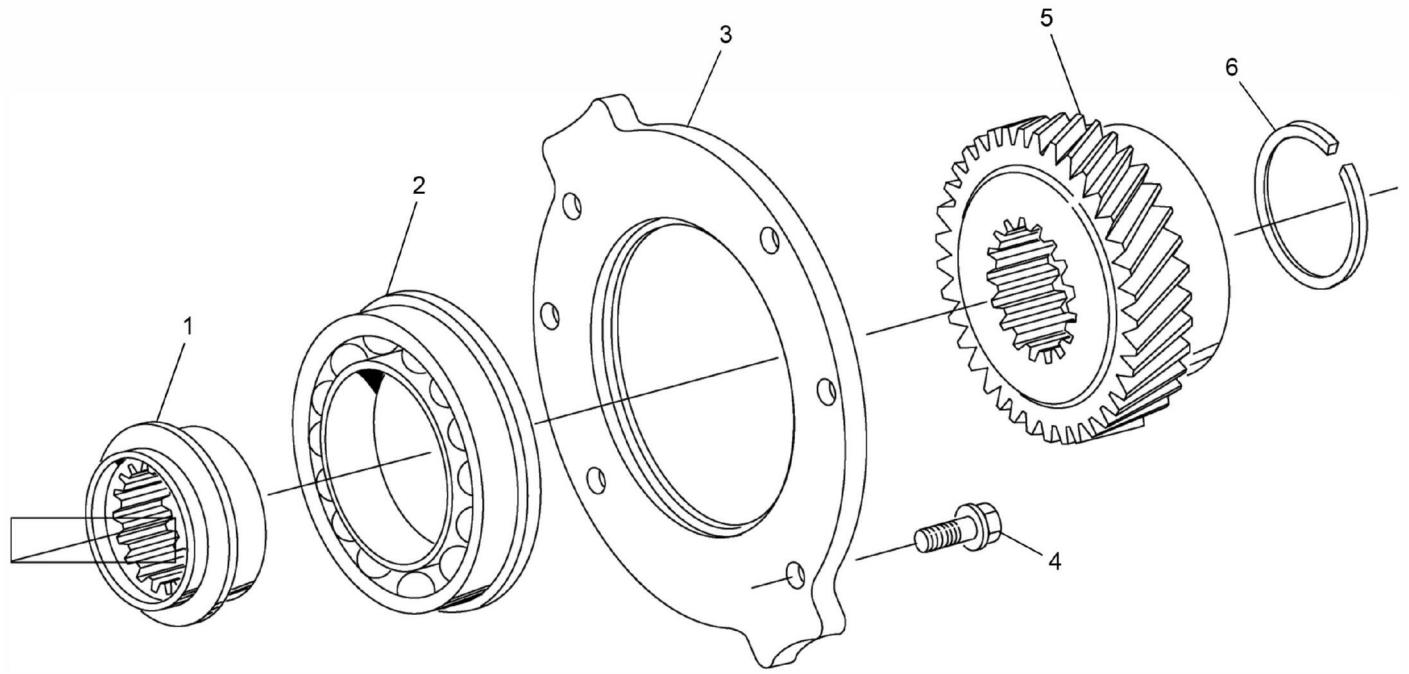

REF	PART NO.	DESCRIPTION	QTY
	T134131_Section4* (Rev. 00)	*Auxiliary Drive Gear*	
1	226126	Spacer	1
2	225772	Bearing	1
3	225773	Retainer	1
4	225769	Capscrew, 3/8"-16 X 1"	6
5	225774	Auxiliary Drive Gear	1
6	225764	Snap Ring	1

* NOT PURCHASABLE AT THIS LEVEL

WHEN ORDERING PARTS, SPECIFY MODEL NUMBER, SERIAL NUMBER AND DESCRIPTION OF PARTS REQUIRED

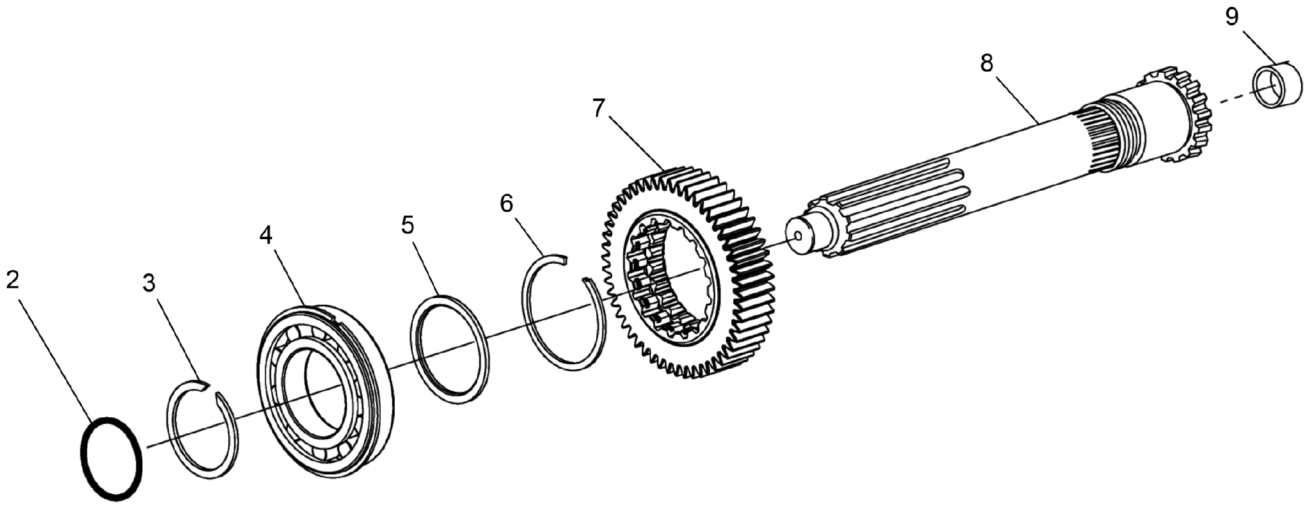
9
8
7
6
5
4
3
2

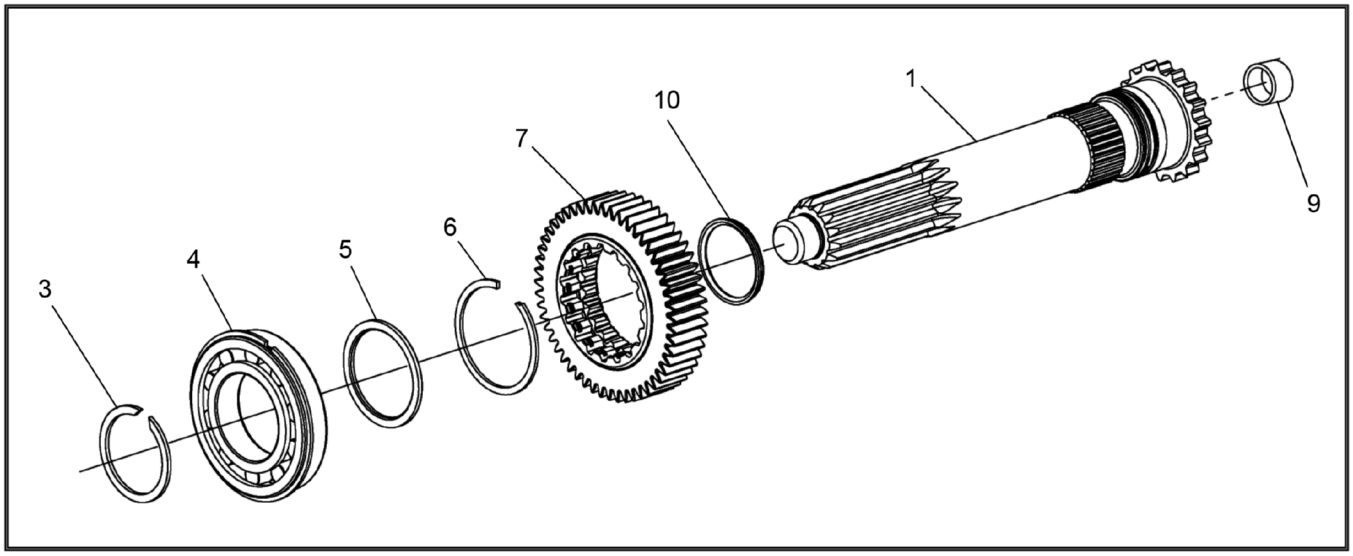
1
10
7
6
5
4
3
9

REF	PART NO.	DESCRIPTION	QTY
	T134131_Section5* (Rev. 00)	*Input Shaft & Drive Gear*	
1	226470	Input Shaft Kit	1
2	226472**	O-Ring	1
3	225776	Snap Ring	1
4	226473	Shielded Roller Bearing	1
5	225778	Spacer	1
6	225779	Snap Ring	1
7	225780	Main Drive Gear	1
8	226120	Input Shaft Replacement Kit	1
9	225781	Bushing	1
10	226469	Seal Kit	1

* NOT PURCHASABLE AT THIS LEVEL
**THIS ITEM IS FOR SHIPPING ONLY-DO NOT REPLACE

WHEN ORDERING PARTS, SPECIFY MODEL NUMBER, SERIAL NUMBER AND DESCRIPTION OF PARTS REQUIRED

REF	PART NO.	DESCRIPTION	QTY
	T134131_Section6* (Rev. 00)	*Reverse Idler*	
1	225786	Washer	4
2	227793	Bearing, Roller	2
3	225788	Reverse Idler Gear	2
4	225790	Retaining Ring	4
5	225791	Idler Shaft	2

* NOT PURCHASABLE AT THIS LEVEL

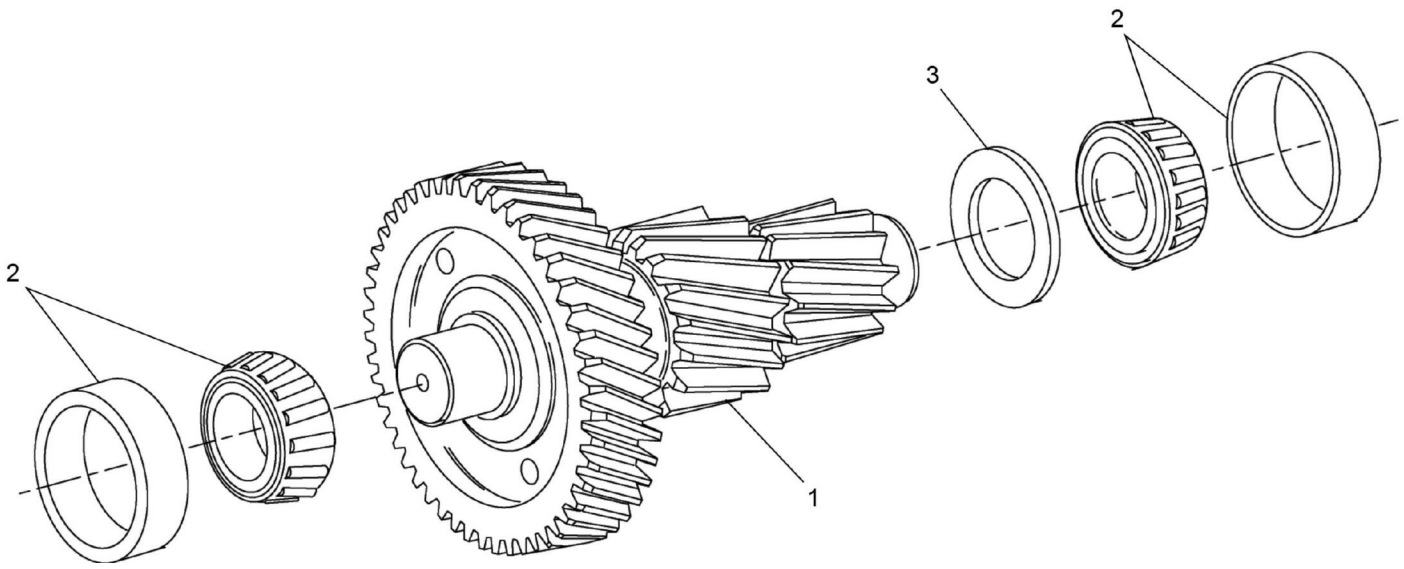

REF	PART NO.	DESCRIPTION	QTY
	T134131_Section7* (Rev. 00)	*Countershaft & Bearings (AUX)*	
1	225792	Welded Countershaft ASSY	2
2	227800	Bearing	4
3	225794	Spacer	2

* NOT PURCHASABLE AT THIS LEVEL

WHEN ORDERING PARTS, SPECIFY MODEL NUMBER, SERIAL NUMBER AND DESCRIPTION OF PARTS REQUIRED

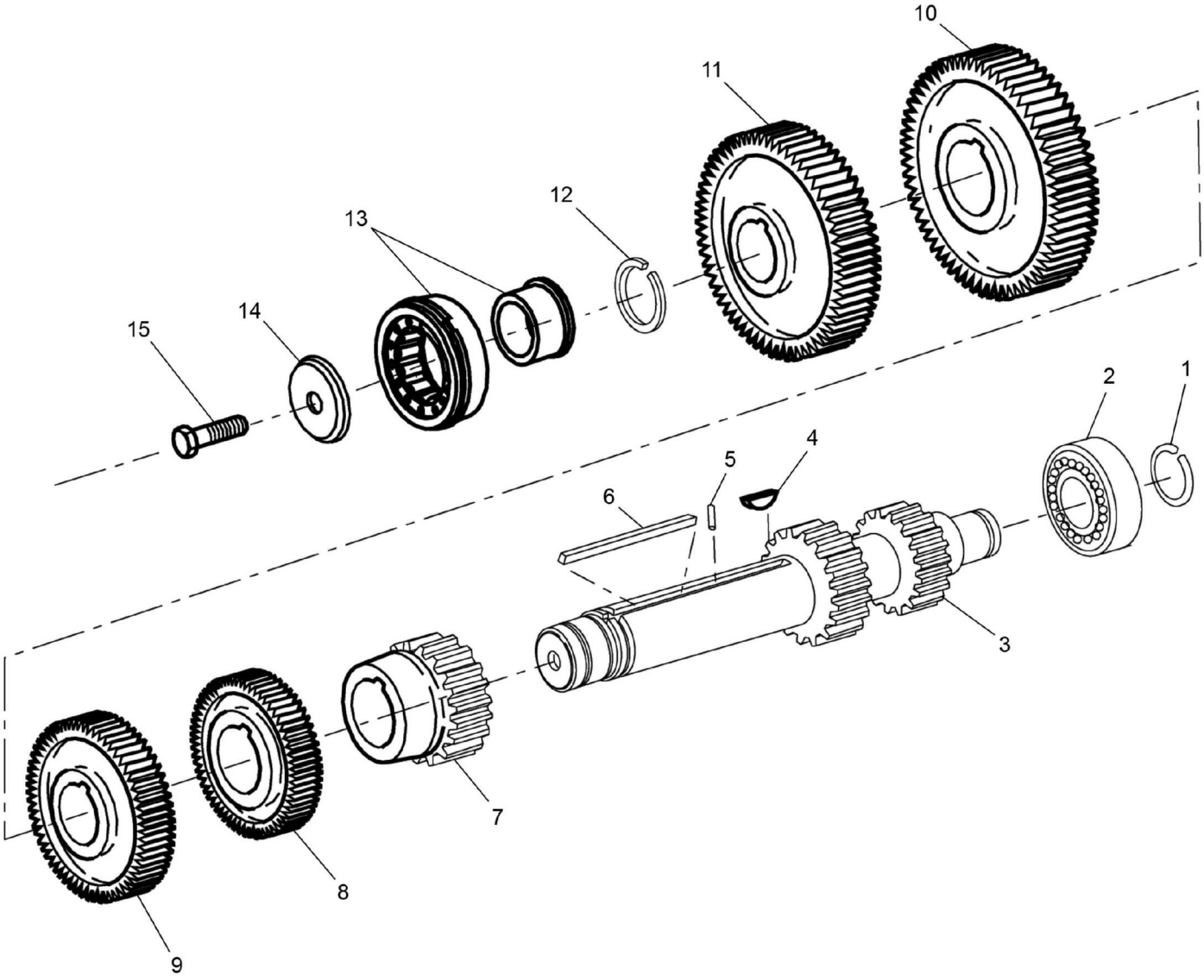

WHEN ORDERING PARTS, SPECIFY MODEL NUMBER, SERIAL NUMBER AND DESCRIPTION OF PARTS REQUIRED

LOAD KING BY CUSTOM TRUCK ONE SOURCE

COUNTERSHAFT ASSEMBLY (TRANSMISSION)

DATE: Released 08-2018

MODEL: 480-126

PAGE: 302

CHAPTER 2

REF	PART NO.	DESCRIPTION	QTY
	T134131_Section8* (Rev. 00)	*Countershaft Assembly*	
1	225795	Snap Ring	2
2	225797	Bearing	2
3	225798	CNTRSHFT W/REV & LO	2
4	225799	Key	2
5	225800	Roll Pin	2
6	225801	Key	2
7	225802	1St Gear-CNTRSHFT	2
8	225803	2Nd Gear-CNTRSHFT	2
9	225804	OD Gear-CNTRSHFT	2
10	225805	PTO Gear - Lower	1
10A	225806	PTO Gear - Upper	1
11	225807	Drive Gear-CNTRSHFT	2
12	225808	Snap Ring	2
13	225809	Bearing	2
14	226127	Retainer	2
15	225811	Capscrew, 5/8"-18 X 1-3/4"	2

* NOT PURCHASABLE AT THIS LEVEL

WHEN ORDERING PARTS, SPECIFY MODEL NUMBER, SERIAL NUMBER AND DESCRIPTION OF PARTS REQUIRED

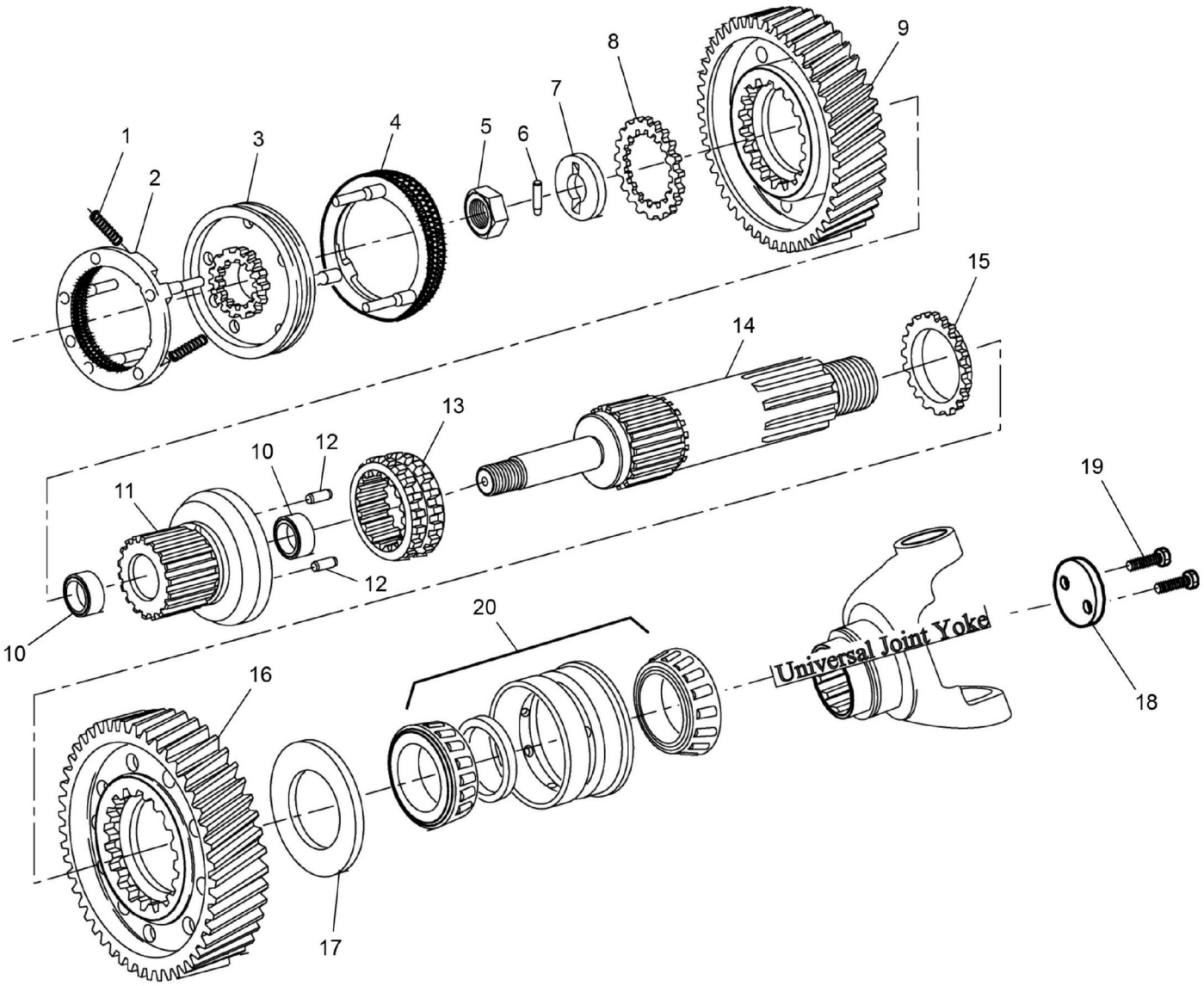

WHEN ORDERING PARTS, SPECIFY MODEL NUMBER, SERIAL NUMBER AND DESCRIPTION OF PARTS REQUIRED

LOAD KING BY CUSTOM TRUCK ONE SOURCE

MAINSHAFT & SYNCHRO (AUX) (TRANSMISSION)

DATE: Released 08-2018

MODEL: 480-126

PAGE: 304

CHAPTER

2

REF	PART NO.	DESCRIPTION	QTY
	T134131_Section9* (Rev. 00)	*Mainshaft & Synchro (AUX)*	
1	225812	Spring	3
2	225813	Synchronizer ASSY, HI Range	1
3	225814	Sliding Clutch	1
4	225815	Synchronizer Assembly, LO Range	1
5	225816	Nut	1
6	225817	Dowel Pin	1
7	225818	Washer	1
8	225819	Washer	1
9	225820	Reduction Gear	1
10	225821	Bushing	2
11	225822	Mainshaft ASSY	1
12	225823	Pin	2
13	226455	Sliding Clutch	1
14	226456	Mainshaft	1
15	225826	Washer	1
16	225827	Deep Reduction Gear	1
17	225828	Washer	1
18	226457	Output Yoke / Flange Retainer Kit	1
19	226458	HEX Flange Head Screw, M12 X 1.25 X 60	2
20	226436	Tapered Roller Bearing	1

* NOT PURCHASABLE AT THIS LEVEL

WHEN ORDERING PARTS, SPECIFY MODEL NUMBER, SERIAL NUMBER AND DESCRIPTION OF PARTS REQUIRED

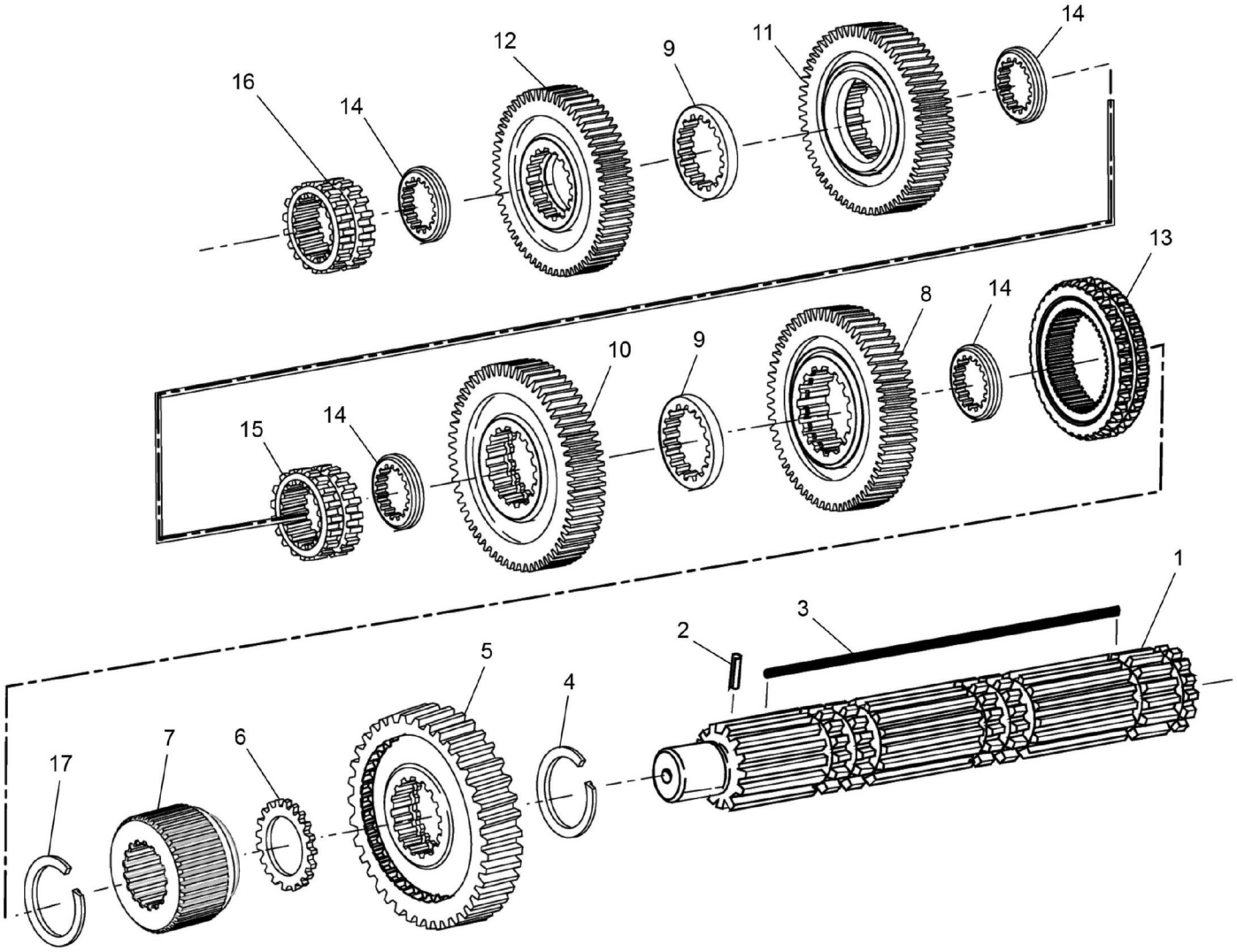

WHEN ORDERING PARTS, SPECIFY MODEL NUMBER, SERIAL NUMBER AND DESCRIPTION OF PARTS REQUIRED

LOAD KING BY CUSTOM TRUCK ONE SOURCE

MAINSHAFT ASSEMBLY (TRANSMISSION)

DATE: Released 08-2018

MODEL: 480-126

PAGE: 306

CHAPTER 2

REF	PART NO.	DESCRIPTION	QTY
	T134131_Section10* (Rev. 00)	*Mainshaft Assembly*	
1	226439	Mainshaft ASSY	1
2	225832	Roll Pin	1
3	226440	Key, Mainshaft (Special)	1
4	226441	Snap Ring	1
5	226442	Reverse Gear-Mainshaft	1
6	226443	Spacer	1
7	226444	Mainshaft Sleeve	1
8	226445	LO Gear-Mainshaft	1
9	225840	Washer	2
10	226446	1st Gear-Mainshaft	1
11	225842	2nd Gear-Mainshaft	1
12	225843	OD Gear-Mainshaft	1
13	226447	Sliding Clutch, 1ST / Reverse	1
14	225845	Washer	4
15	226448	Sliding Clutch, 2ND / 3RD	1
16	226449	Sliding Clutch, OD / Direct	1
17	225764	Snap Ring	1

* NOT PURCHASABLE AT THIS LEVEL

WHEN ORDERING PARTS, SPECIFY MODEL NUMBER, SERIAL NUMBER AND DESCRIPTION OF PARTS REQUIRED

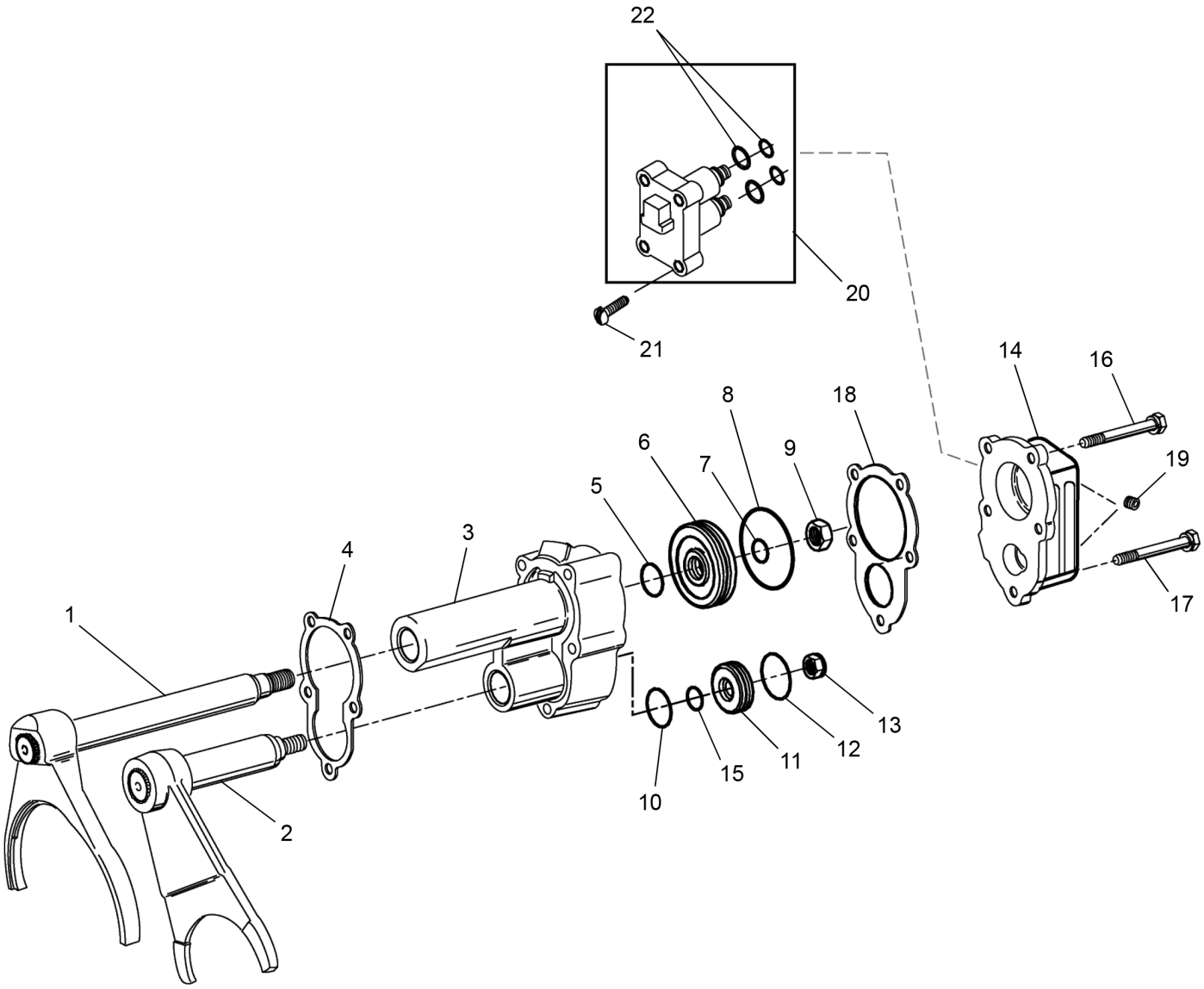

WHEN ORDERING PARTS, SPECIFY MODEL NUMBER, SERIAL NUMBER AND DESCRIPTION OF PARTS REQUIRED

LOAD KING BY CUSTOM TRUCK ONE SOURCE

COMBINATION CYLINDER (TRANSMISSION)

DATE: Released 08-2018

MODEL: 480-126

PAGE: 308

CHAPTER 2

REF	PART NO.	DESCRIPTION	QTY
	T134131_Section11* (Rev. 00)	*Combination Cylinder*	
1	225847	Yoke ASSY, Range	1
2	225848	Yoke ASSY, Reduction	1
3	226450	Cylinder	1
4	225850	Gasket	1
5	225851	O-Ring	1
6	225852	Piston	1
7	225853	O-Ring	1
8	225854	O-Ring	1
9	225855	Nut, 5/8"-18	1
10	225856	O-Ring	1
11	225857	Piston Kit	1
12	225858	O-Ring	1
13	225859	Nut, 1/2"-20	1
14	226451	Combination Cylinder Cover Kit	1
15	225861	O-Ring	1
16	226452	Screw, HEX HD/Washer ASSY, .375-16 X 3.500	3
17	226453	Screw, HEX HD/Washer ASSY, .375-16 X 6.750	2
18	226454	Cylinder Cover Gasket	1
19	225911	Pipe Plug, 1/8" NPT	4
20	226141	Range/Splitter Valve Kit	2
21	226142	HEX Flange Head Screw, #10-24 X 1 1/4	8
22	226140	O-Ring Kit	2

* NOT PURCHASABLE AT THIS LEVEL

WHEN ORDERING PARTS, SPECIFY MODEL NUMBER, SERIAL NUMBER AND DESCRIPTION OF PARTS REQUIRED

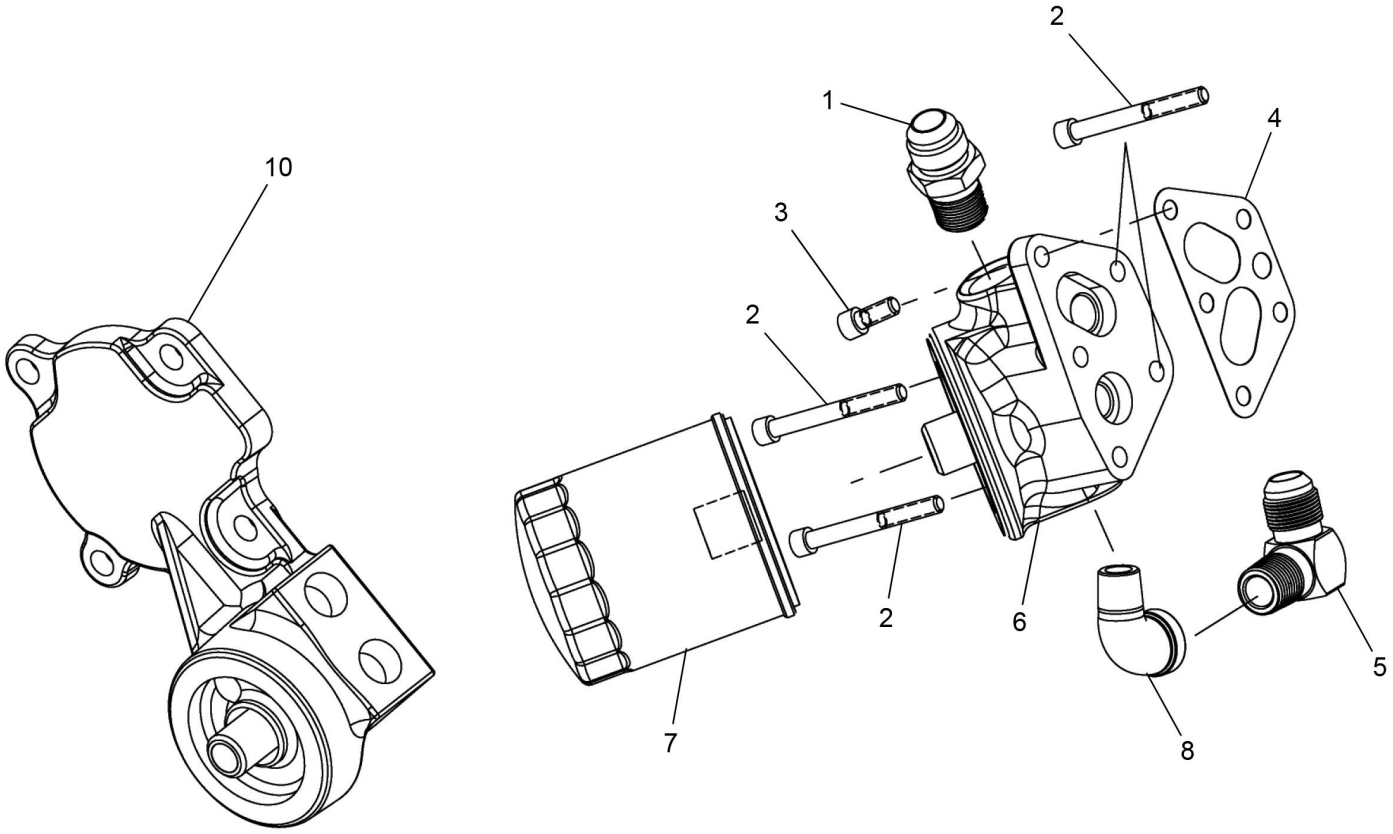
10
1
2
4
3
2
2
6
5
7
8

REF	PART NO.	DESCRIPTION	QTY
	T134131_Section12* (Rev. 00)	*Oil Filter*	
1	225872	Connector	1
2	226429	Screw	4
3	226430	Screw	1
4	226431	Gasket	1
5	226432	Elbow	1
6	226433	Oil Filter/Adapter Kit	1
7	226434	Oil Filter Element	1
8	226435	Elbow	1
9**	226438	Oil Filter Cover Kit	1
10	226437	AUX Countershaft Cover ASSY	1

* NOT PURCHASABLE AT THIS LEVEL
** ITEM NOT SHOWN IN ILLUSTRATION

WHEN ORDERING PARTS, SPECIFY MODEL NUMBER, SERIAL NUMBER AND DESCRIPTION OF PARTS REQUIRED

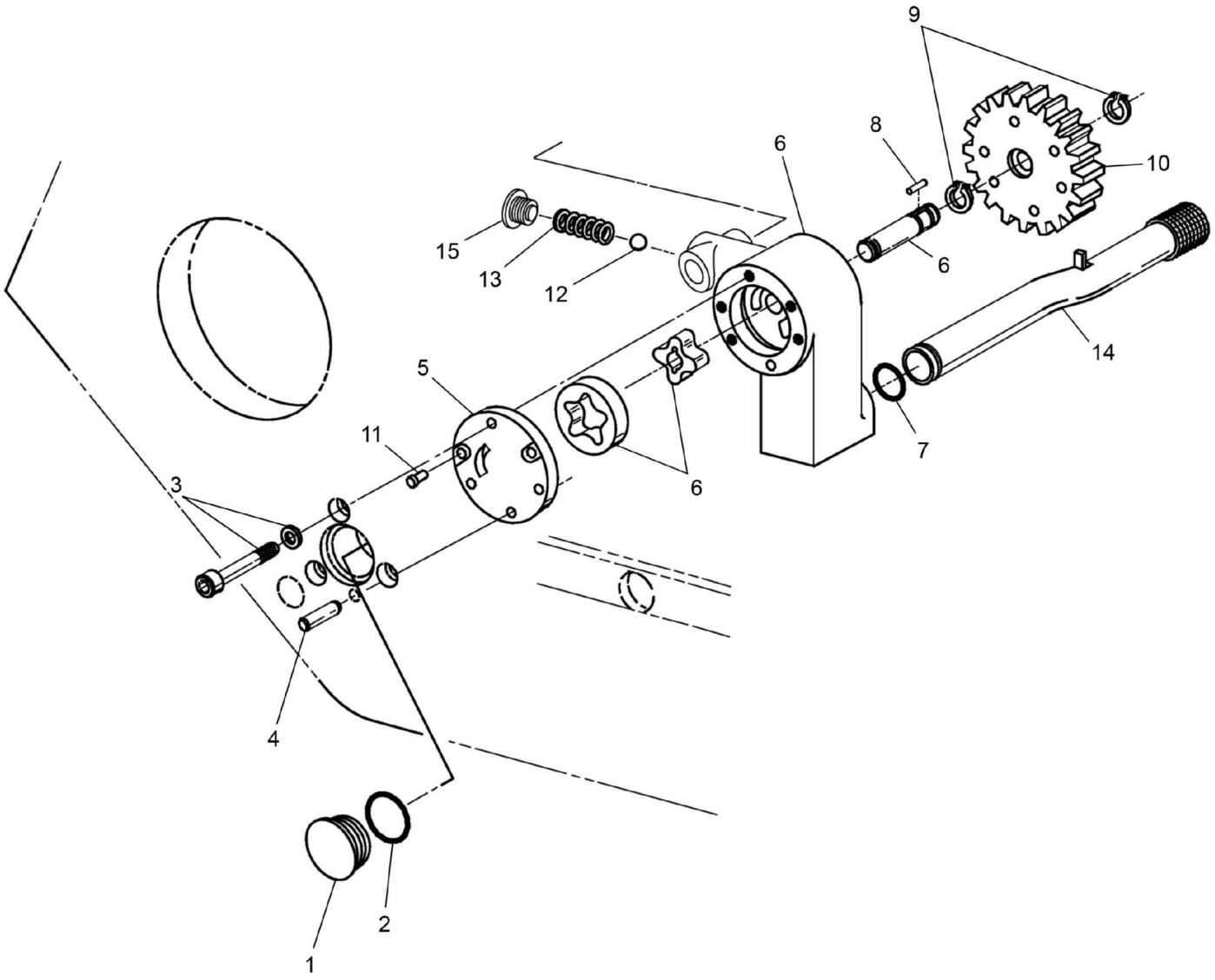
9
8
6
10
15
13
12
6
14
5
11
6
7
3
4
2
1

REF	PART NO.	DESCRIPTION	QTY
	T134131_Section13* (Rev. 00)	*Integral Oil Pump*	
1	225884	Plug	1
2	225851	O-Ring	1
3	225885	Fastener Kit	1
4	225887	Dowel Pin	1
5	225888	Retainer	1
6	225886	Oil Pump Kit	4
7	225896	O-Ring	1
8	225889	Key	1
9	225890	Snap Ring	2
10	225891	Pump Drive Gear	1
11	225897	Screw	2
12	225892	Steel Ball	1
13	225893	Spring	1
14	225894	Suction Tube	1
15	225895	Plug	1

* NOT PURCHASABLE AT THIS LEVEL

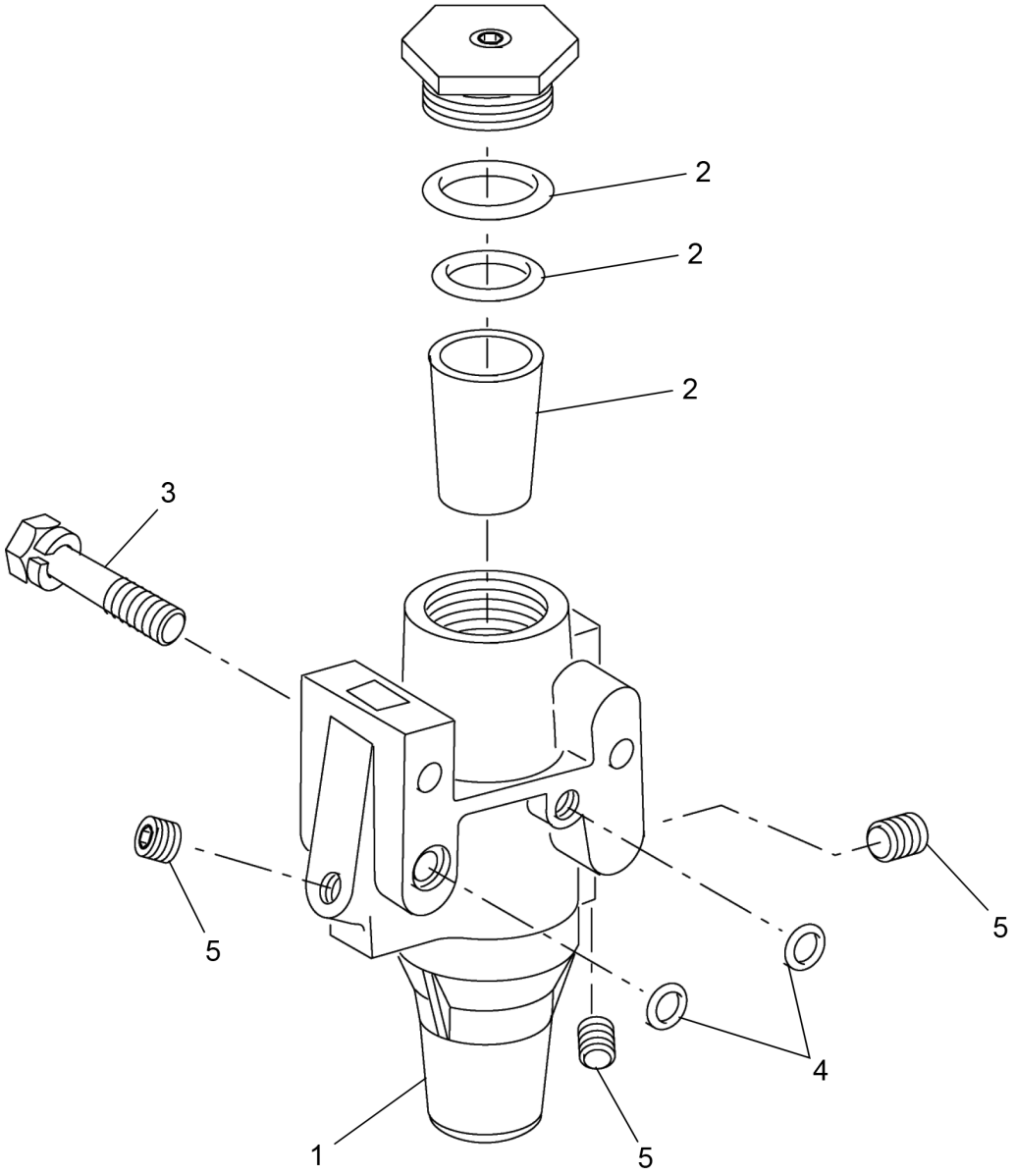

NSS- NOT SOLD SEPARATELY

REF	PART NO.	DESCRIPTION	QTY
	T134131_Section14* (Rev. 00)	*Filter Regulator*	
1	225898	Filter Reg Kit	1
2	225899	O-Ring/Element Kit	1
3	225900	Capscrew, 1/4"-20 X 2-1/4"	2
4	225919	O-Ring	2
5	225911	Pipe Plug, 1/8" NPT	3

* NOT PURCHASABLE AT THIS LEVEL

WHEN ORDERING PARTS, SPECIFY MODEL NUMBER, SERIAL NUMBER AND DESCRIPTION OF PARTS REQUIRED

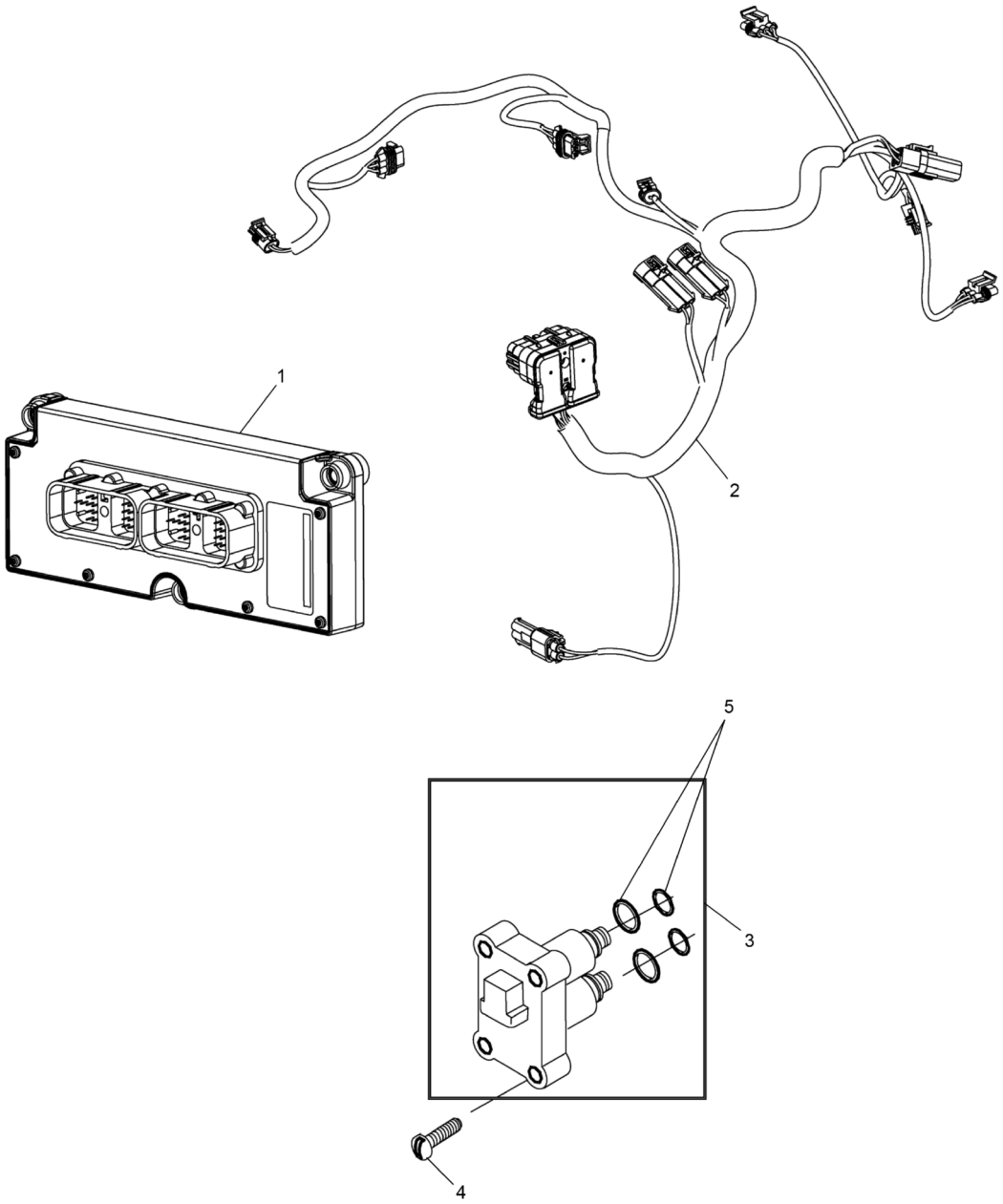

REF	PART NO.	DESCRIPTION	QTY
	T134131_Section15* (Rev. 00)	*Controller ECU & Harness*	
1	226138	ECU Assembly Kit (VMS)	1
2	226139	Transmission Harness Kit	1
3	226141	Range/Splitter Valve Kit	1
4	226142	HEX Flange Head Screw, #10-24 X 1 1/4	4
5	226140	O-Ring Kit	1

* NOT PURCHASABLE AT THIS LEVEL

WHEN ORDERING PARTS, SPECIFY MODEL NUMBER, SERIAL NUMBER AND DESCRIPTION OF PARTS REQUIRED

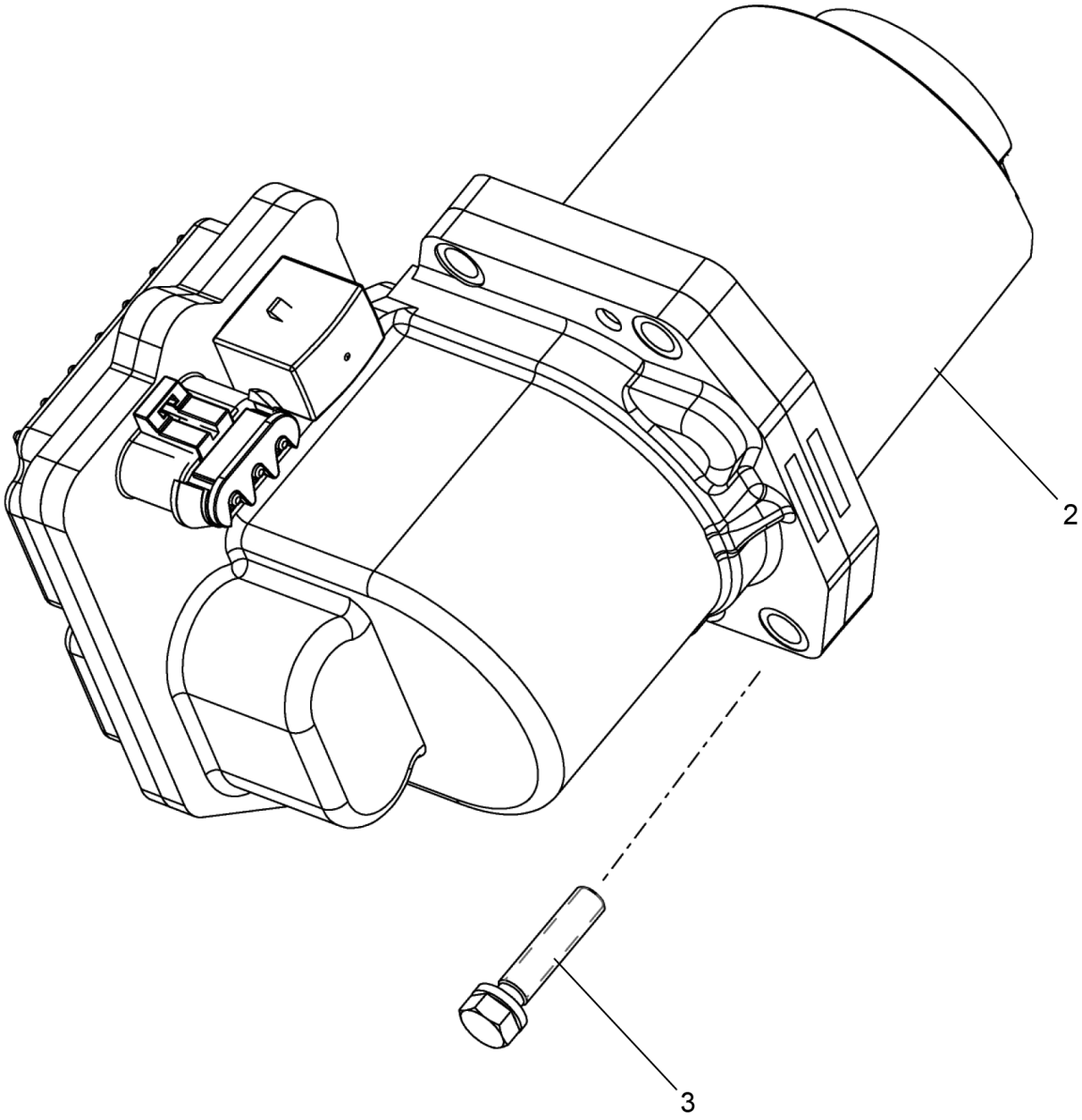

REF	PART NO.	DESCRIPTION	QTY
	T134131_Section16* (Rev. 00)	*Electric Clutch Actuator*	
1**	226128	ECA Shield Kit	1
2	226129	ECA Inline Kit	1
3	226130	Capscrew	4
4**	226464	Cross-shaft Assembly Kit	1

* NOT PURCHASABLE AT THIS LEVEL
** ITEM NOT SHOWN IN ILLUSTRATION

WHEN ORDERING PARTS, SPECIFY MODEL NUMBER, SERIAL NUMBER AND DESCRIPTION OF PARTS REQUIRED

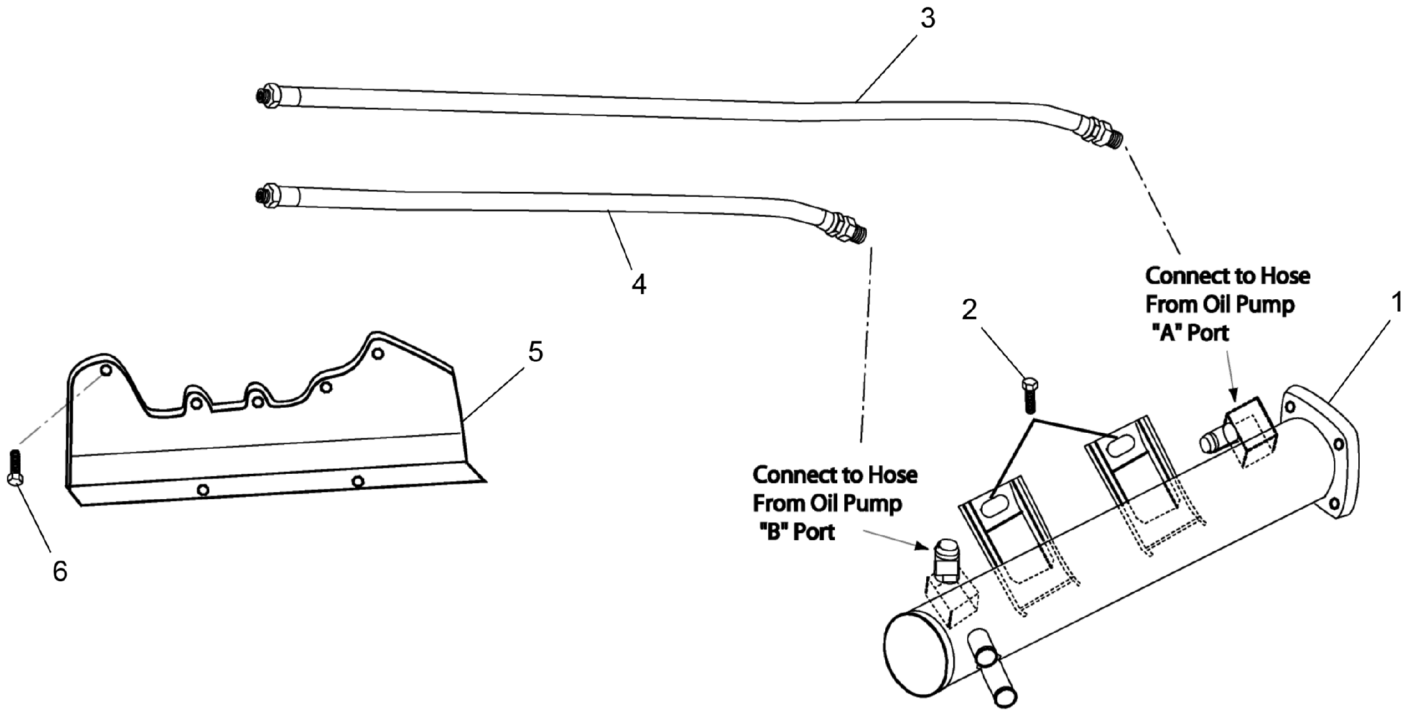
3
4
5
6
2
1
Connect to Hose
From Oil Pump
"A" Port
Connect to Hose
From Oil Pump
"B" Port

REF	PART NO.	DESCRIPTION	QTY
	T134131_Section17* (Rev. 00)	*Heat Exchanger*	
1	227797	Heat Exchanger	1
2	225701	Capscrew, 3/8"-16 X 1-1/4"	2
3	226132	Oil Hose Assembly, 52"	1
3A	226133	Oil Hose Assembly, 57.5"	1
4	226134	Oil Hose Assembly, 45"	1
4A	226135	Oil Hose Assembly, 50"	1
5	226136	Heat Exchanger Mounting Bracket Kit	1
6	226137	Screw, 3/8 - 16 X 1-3/4	5

* NOT PURCHASABLE AT THIS LEVEL

WHEN ORDERING PARTS, SPECIFY MODEL NUMBER, SERIAL NUMBER AND DESCRIPTION OF PARTS REQUIRED

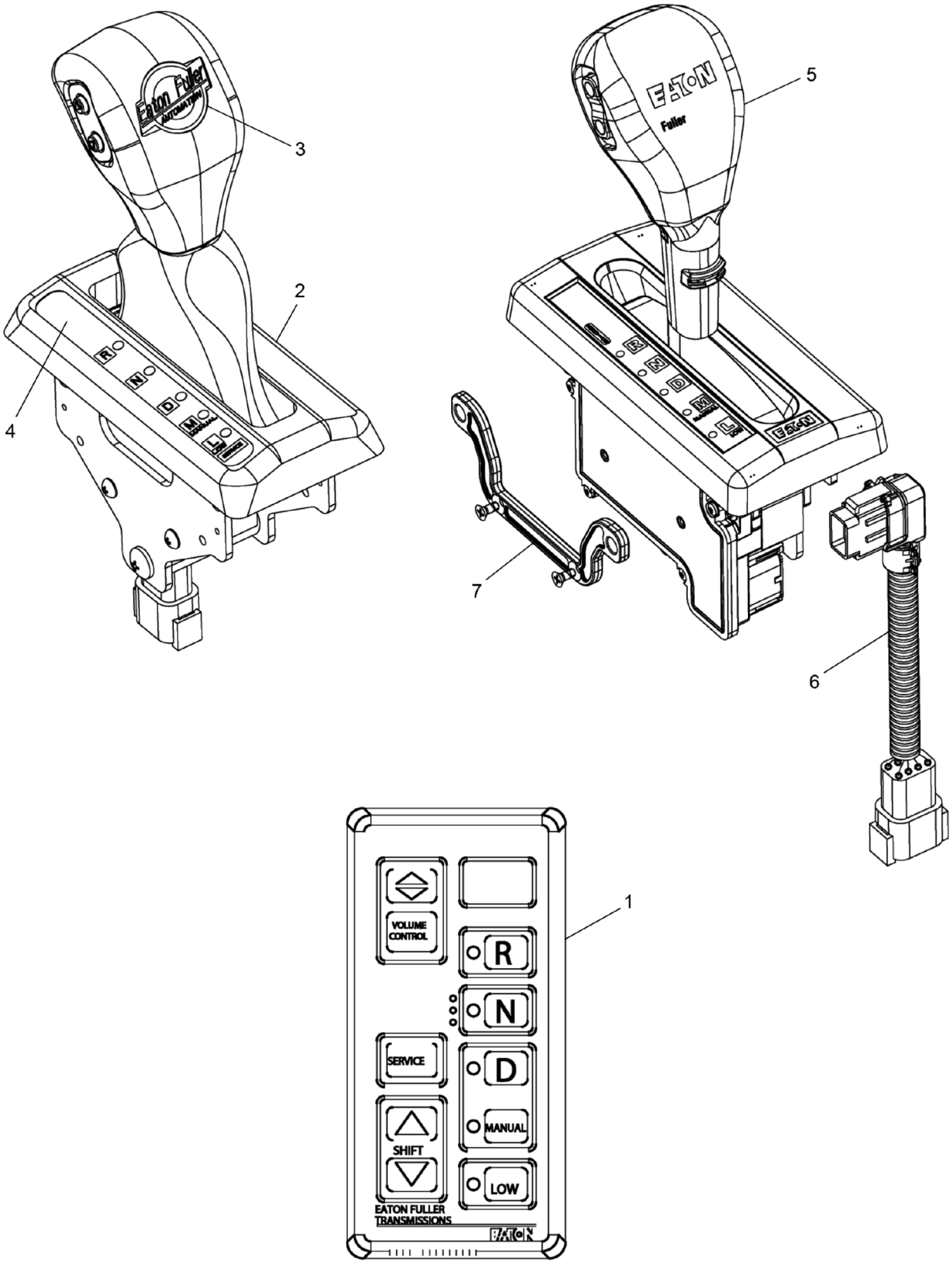

WHEN ORDERING PARTS, SPECIFY MODEL NUMBER, SERIAL NUMBER AND DESCRIPTION OF PARTS REQUIRED

REF	PART NO.	DESCRIPTION	QTY
	T134131_Section18* (Rev. 00)	*Shift Controls*	
1	226148	Pushbutton ASSY	1
2	226149	Cobra Shift Lever Kit (RHO) W/MACK Swing Arm	1
3	226150	No Longer Available	1
4	226151	Shift Lever Position Strip	1
5	226152	Cobra Shift Lever Kit (RHO)	1
6	226153	Jumper Harness ASSY	1
7	226154	Spacer Kit	1

* NOT PURCHASABLE AT THIS LEVEL

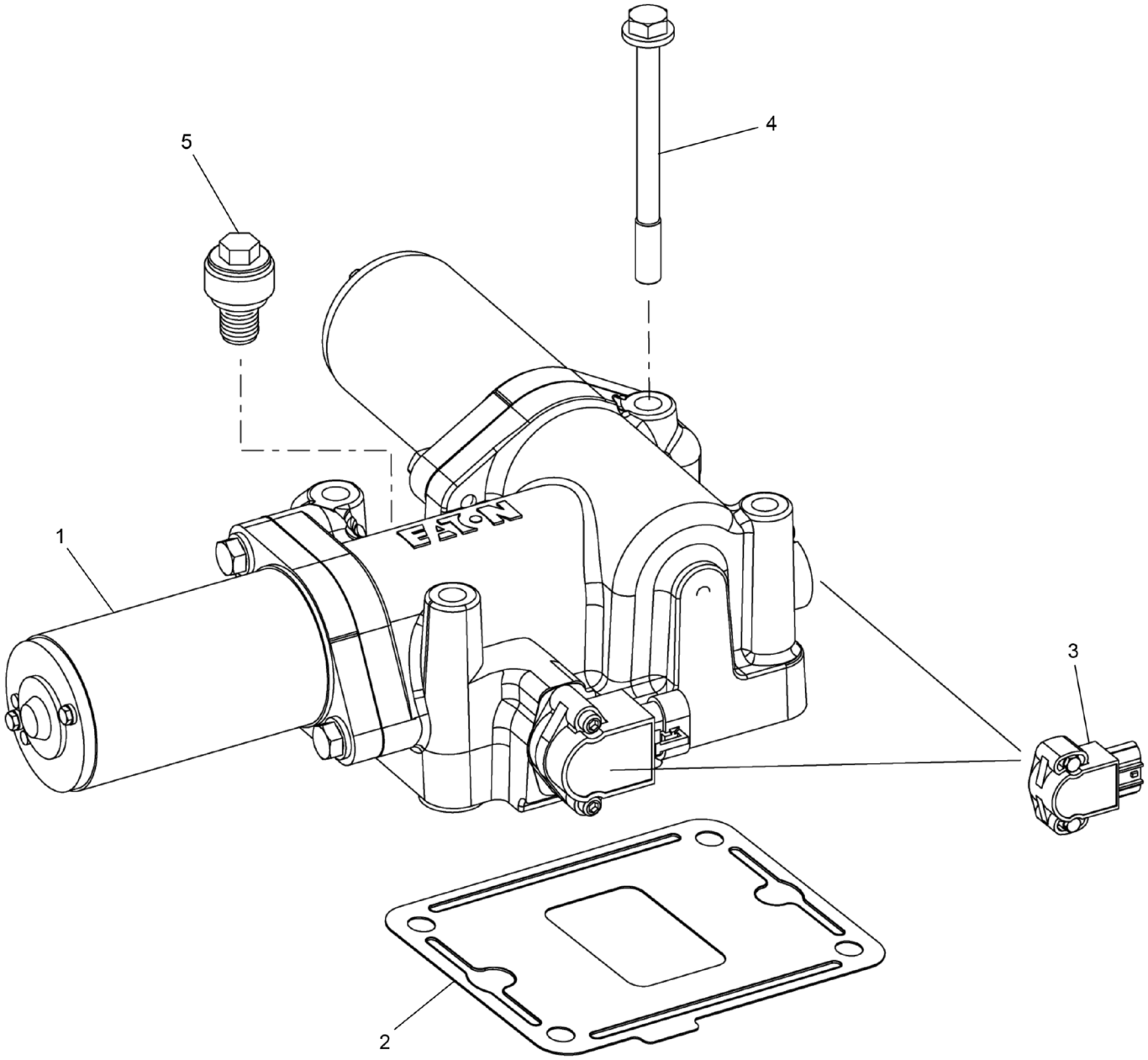

REF	PART NO.	DESCRIPTION	QTY
	T134131_Section19* (Rev. 00)	*X-Y Shifter Module*	
1	226143	Reman EXCH Gen 3 X-Y Shifter Kit	1
2	226144	Gasket	1
3	226145	Position Sensor Kit	2
4	226146	Capscrew	4
5	225727	Breather, 1/4" NPT	1
6**	226147	XY Shifter Repair Kit	1

* NOT PURCHASABLE AT THIS LEVEL
** ITEM NOT SHOWN IN ILLUSTRATION

WHEN ORDERING PARTS, SPECIFY MODEL NUMBER, SERIAL NUMBER AND DESCRIPTION OF PARTS REQUIRED

REF	PART NO.	DESCRIPTION	QTY
	T134131_Section20* (Rev. 00)	*Kits & Assemblies*	
1	225899	O-Ring/Element Kit	1
2	225898	Filter Reg Kit	1
3	225857	Piston Kit	1
4	225666	Shim Kit	1
5	226140	O-Ring Kit	1
6	225656	Oil Seal Kit, For Magnetic Cover	1
7	225886	Oil Pump Kit	1
8	226145	Position Sensor Kit	1
9	226433	Oil Filter/Adapter Kit	1
10	225974	Synchronizer Kit	1
11	225975	Synchronizer Replacement Kit	1
12	226125	Speedo Plug Kit	1
13	226141	Range/Splitter Valve Kit	1
14	226459	Trans Controller Mounting Kit	1
15	226143	Reman EXCH Gen 3 X-Y Shifter Kit	1
16	226136	Heat Exchanger Mounting Bracket Kit	1
17	226138	ECU Assembly Kit (VMS)	1
18	226129	ECA Inline Kit	1
19	226111	Speed Sensor Kit, Single Pick-Up	1
20	226460	Gasket Kit	1
21	226461	Basic Rebuild Kit	1
22	226124	Directional Speed Sensor Kit	1
23	226139	Transmission Harness Kit	1
24	226147	XY Shifter Repair Kit	1
25	226462	PTO Bracket Kit	1
26	226451	Combination Cylinder Cover Kit	1
27	226463	Combination Cylinder O-Ring Kit	1
28	226457	Output Yoke / Flange Retainer Kit	1
29	226464	Cross-shaft Assembly Kit	1
30	226465	ECA Clutch Grease Line Kit	1
31	226466	ECA Speed Sensor Jumper Harness Kit	1
32	226118	Clutch Housing Replacement Kit, Standard	1
33	226119	Clutch Housing Replacement Kit, Nodal	1
34	226109	Hand Hole Cover Kit	1
35	226128	ECA Shield Kit	1
36	226467	LCIB Brake ASSY Kit	1
37	226468	Small Parts Kit	1
38	226469	Seal Kit	1
39	226470	Input Shaft Kit	1
40	226120	Input Shaft Replacement Kit	1
41	226471	Clutch Installation Kit	1
42	225654	Speedo Rotor ASSY, Magnetic	1
43	226155	Shift Bar Housing ASSY	1
44	226121	Rear Bearing Cover ASSY	1
45	226439	Mainshaft ASSY	1
46	226156	Shift Bar Housing ASSY	1
47	226105	Case ASSY	1

* NOT PURCHASABLE AT THIS LEVEL

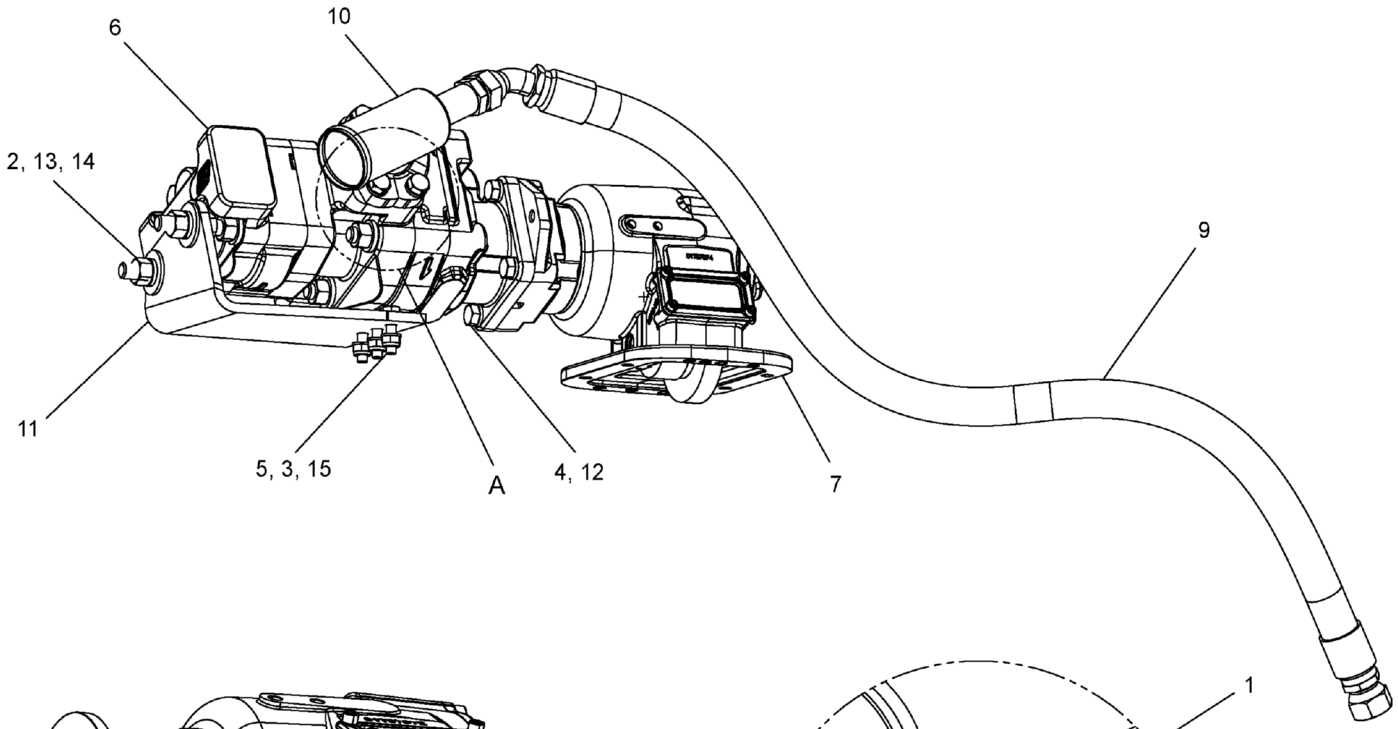

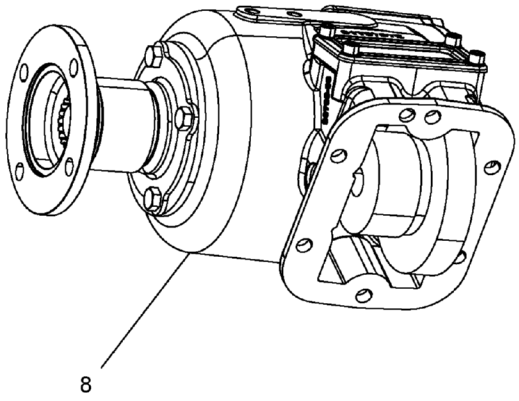

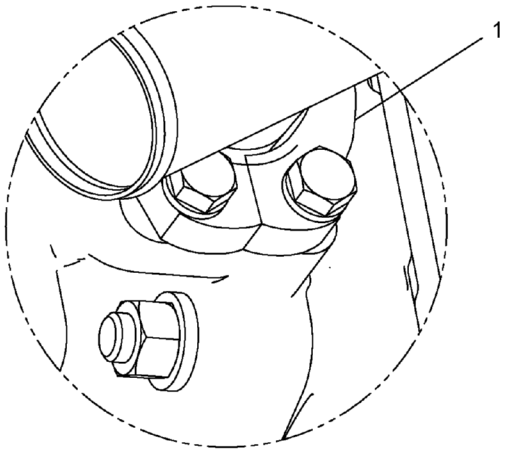

DETAIL A

WHEN ORDERING PARTS, SPECIFY MODEL NUMBER, SERIAL NUMBER AND DESCRIPTION OF PARTS REQUIRED

REF	PART NO.	DESCRIPTION	QTY
	T133920 (Rev. C)	*Pump/PTO Assembly*	
1	**505-05002**	Kit, Split Flange, C61-32 (see page 325)	1
2	N04-625C000-25	Nut, HEX 0.625-11, ST SQC G5	4
3	NYM-10CM000-41	Nut, NYL-INS M10-1.5, STZ C8	3
4	S01-500CA75-Y8	SCR, HHCS 0.50-13 X 1.75, ST SQC G8	4
5	S07-10CM040-28	SCR, HHCS M10-1.5 X 40 PT, ST SQC C8.8	3
6	**T133562**	Pump, Hydraulic (see page 326)	1
7	**T133632**	PTO, 8 Bolt (see page 328)	1
8	**T133633**	PTO, 6 Bolt (see page 330)	1
9	T134756	Hose, -16, 250, FJICSW/FJICSW45, 1150	1
10	T134763	Tee, Suction	1
11	T135081	Plate, Pump Support	1
12	W07-500X000-20	WSH, LCK, MED SPLT 0.50, ST SQC	4
13	W07-625X000-20	WSH, LCK, MED SPLT 0.625, ST Z	2
14	WAW-62WX000-20	WSH, FL TYPA-WID 0.625, ST SQC	2
15	WMF-010X000-20	WSH, Flat M10 DIN125, ST SQC	6

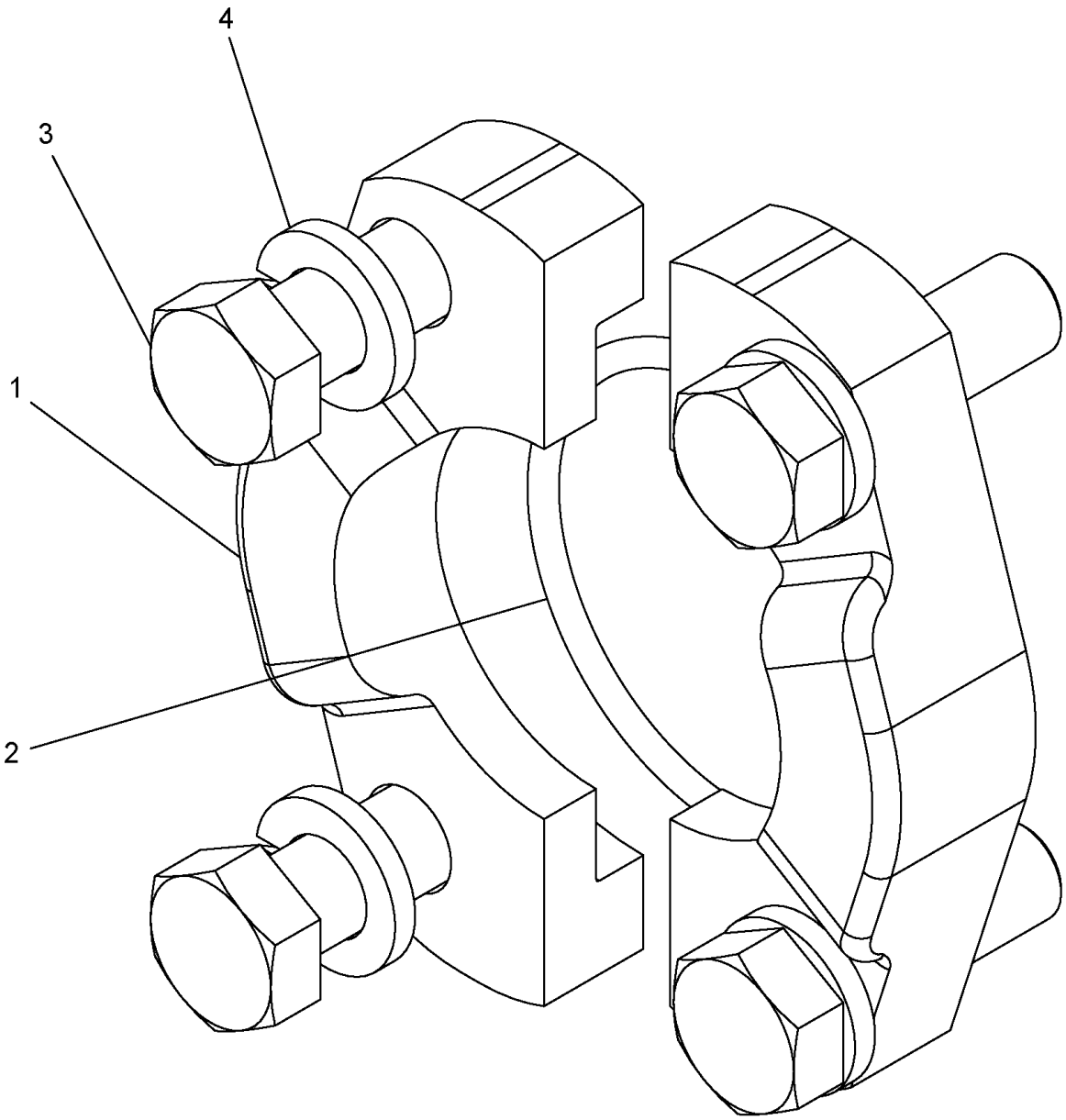

REF	PART NO.	DESCRIPTION	QTY
	505-05002 (Rev. A)	*Kit, Split Flange, C61-32*	
1	505-05003	Clamp, Split Flange, C61-32	2
2	260-40005	O-Ring, SAE C61/C62-32	1
3	SHF-500CA50-25	SCR, HHCS FT 0.50-13 X 1.50, ST SQC G5	4
4	W07-500X000-20	WSH, LCK, MED SPLT 0.50, ST SQC	4

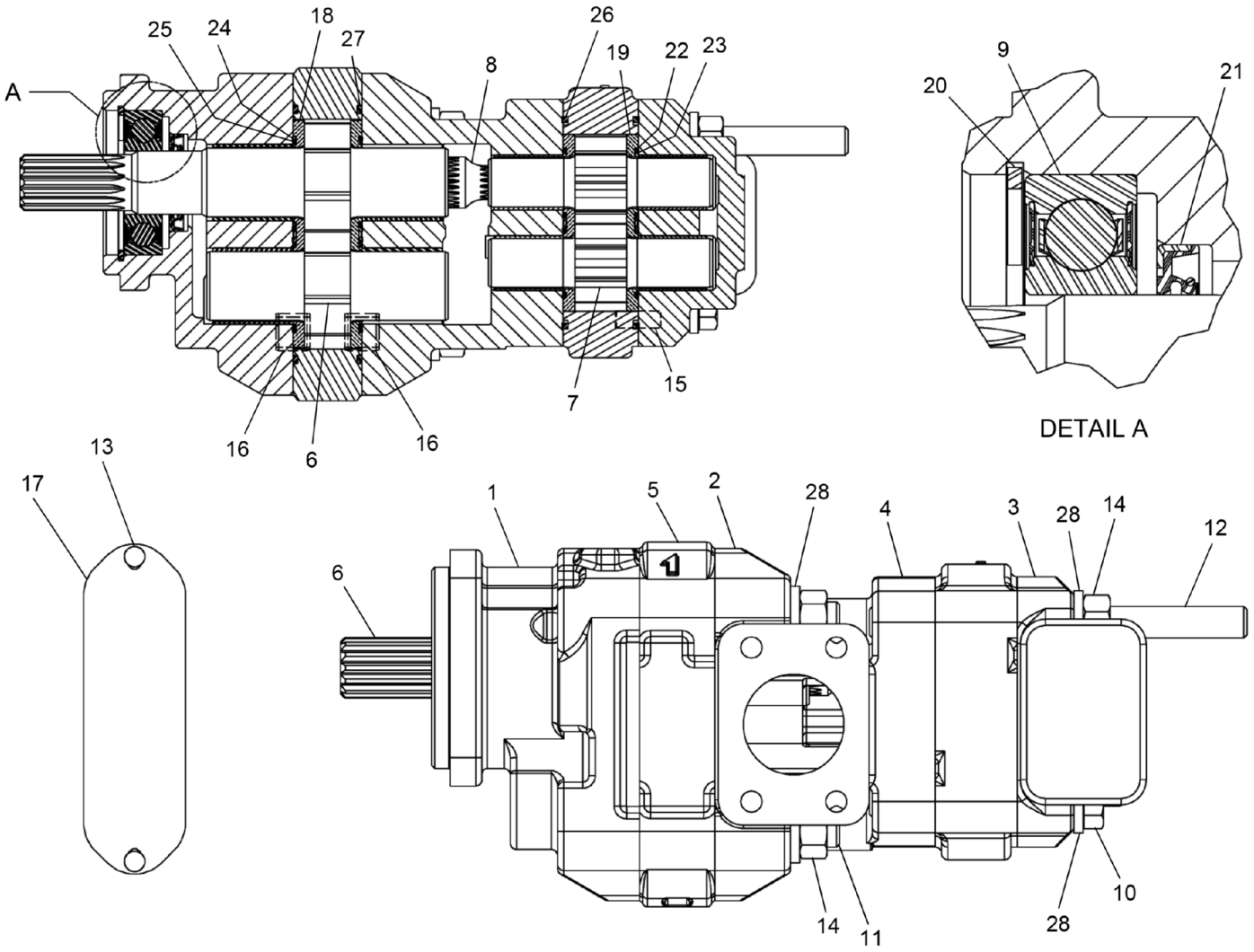

WHEN ORDERING PARTS, SPECIFY MODEL NUMBER, SERIAL NUMBER AND DESCRIPTION OF PARTS REQUIRED

REF	PART NO.	DESCRIPTION	QTY
	T133562 (Rev. A)	*Pump, Hydraulic*	
1	227798	Housing, Sec	1
2	227813	Housing, Piggyback	1
3	227814	Housing, PEC	1
4	227815	Gear Housing	1
5	227816	Housing, Gear	1
6	227817	Set, Gear Shaft	1
7	227818	Set, Gear	1
8	227819	Shaft, CONN	1
9	227808	BRG, Ball	1
10	220250	Cap Screw	2
11	227820	Stud	4
12	227821	Stud	2
13	221316	Screw, Drive	2
14	221285	Nut, HEX	6
15	217923	Pin, Dowel	4
16	217938	Pin, Dowel	8
17	220247	Name Plate	1
18	217934	THRPL	2
19	227822	THRPL	2
20	227812	Ring, Snap	1
21	217933	Seal, Lip	1
22	227823	Seal, Chan	2
23	227824	Seal, BK-Up	2
24	217935	Seal, Chan	2
25	217936	Seal, BK-Up	2
26	227825	Seal, SQ-R	2
27	227826	Seal, SQ-R	2
28	218937	Washer	8

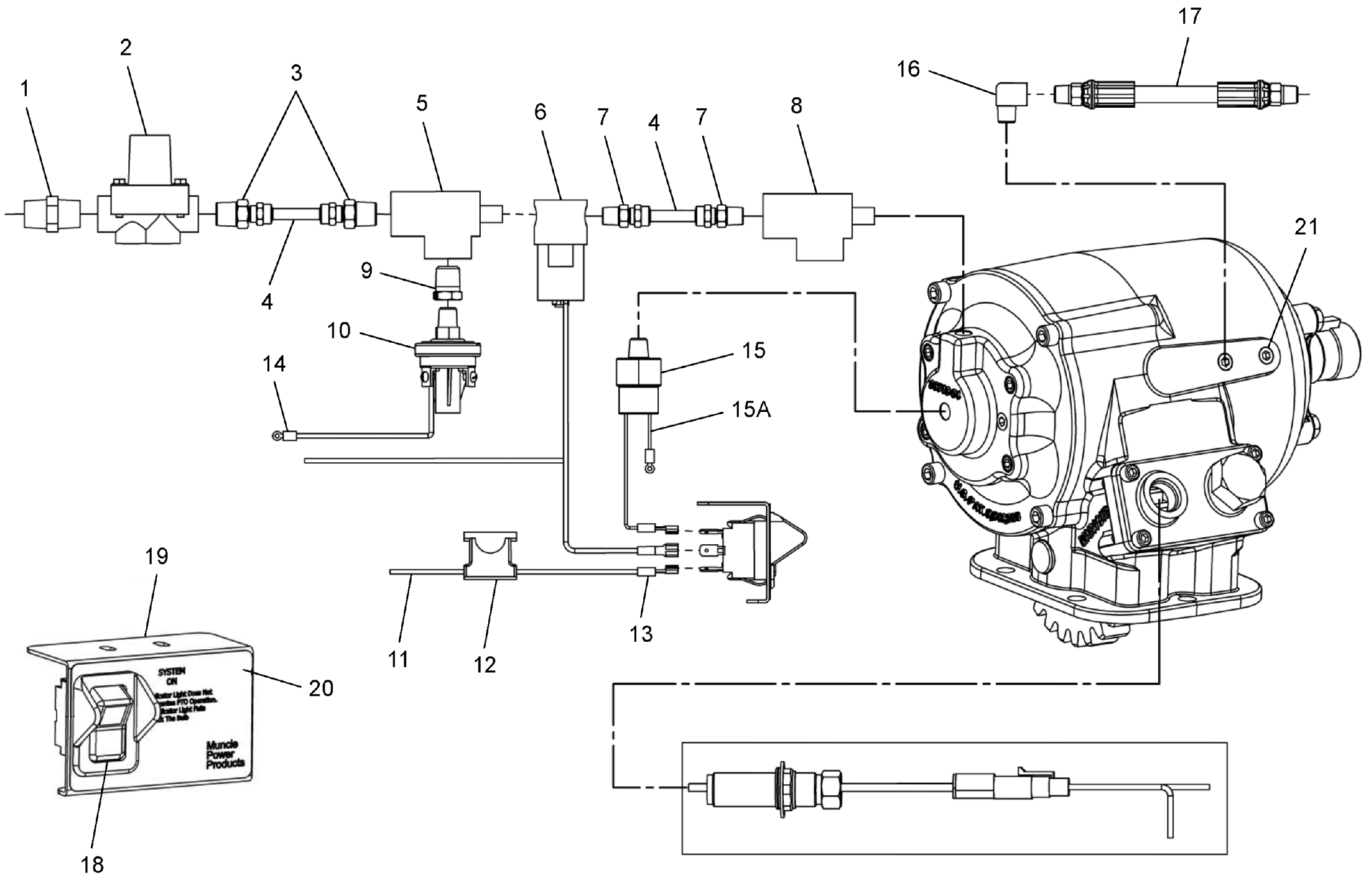

SWITCH BRACKET ASSEMBLY

REF	PART NO.	DESCRIPTION	QTY
	T133632 (Rev. A)	*PTO, 8 Bolt*	
1	230170	Pipe Nipple	1
2	230171	Pressure Protection Valve	1
3	230172	Fitting	2
4	230173	Tubing (30 Ft.)	1
5	230174	Street Tee	1
6	230175	12V Solenoid Valve	1
7	230176	Fitting	2
8	230177	Street Tee	1
9	230178	Reducer Bushing	1
10	230179	PRESS. Safety Switch (NO 80 PSI)	1
11	230180	Wire (12 Ft.)	2
12	230181	Fuse Assembly	1
13	230182	Female Spade Connector (¼")	3
14	230183	Ring Terminal	2
15	230184	Pressure Switch	1
15A	230185	Wiring Pigtail	1
16	230186	Orifice Fitting	1
17	230187	Lube Hose Assembly	1
18	230188	Rocker Switch 12V	1
19	230189	Switch Bracket	1
20	230190	Face Plate	1
21	230072	Pipe Plug	1
22*	230191	SOL. Bracket Kit	1

* ITEM NOT SHOWN IN ILLUSTRATION

WHEN ORDERING PARTS, SPECIFY MODEL NUMBER, SERIAL NUMBER AND DESCRIPTION OF PARTS REQUIRED

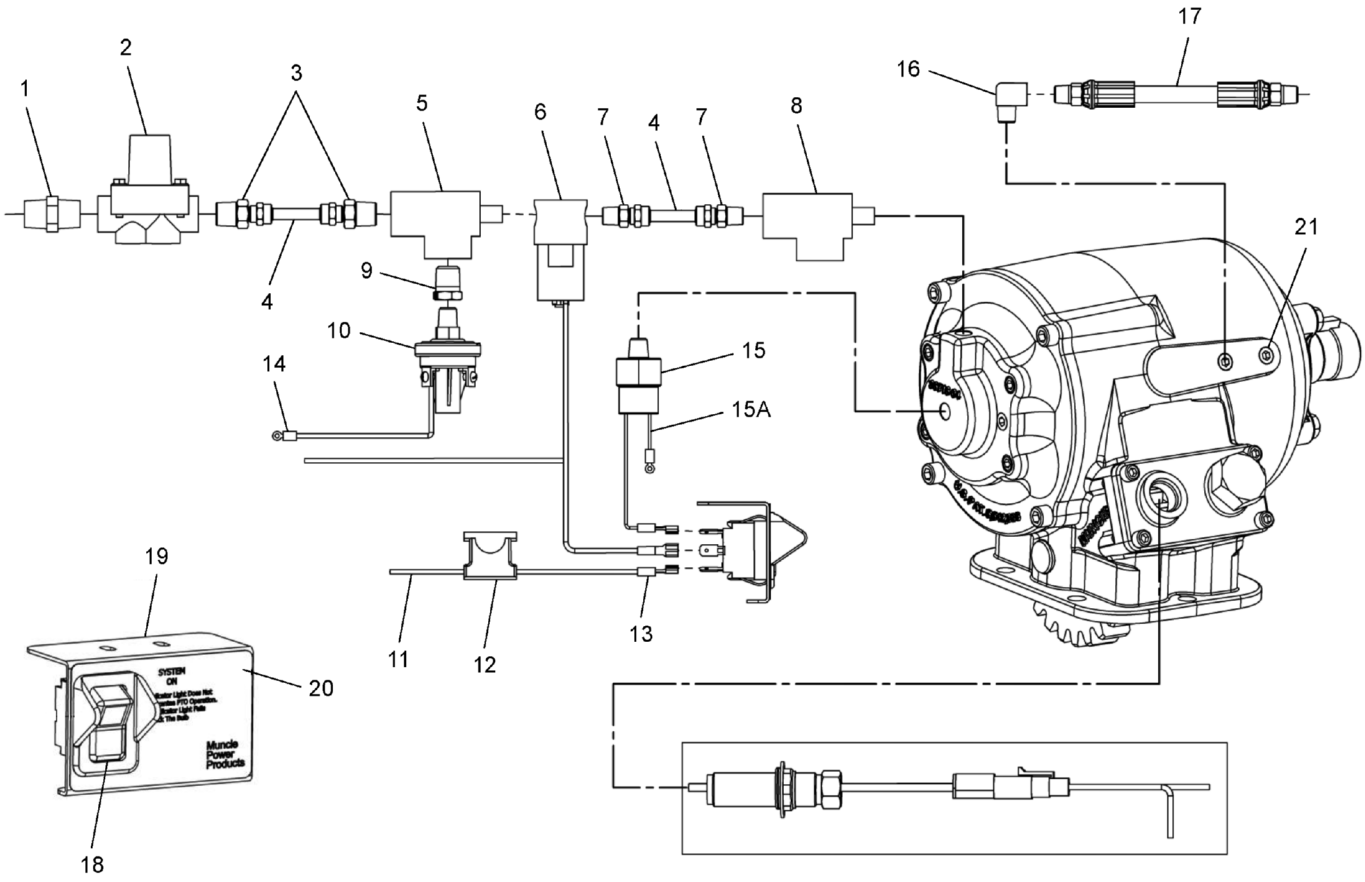

SWITCH BRACKET
ASSEMBLY

REF	PART NO.	DESCRIPTION	QTY
	T133633 (Rev. B)	*PTO, 6 Bolt*	
1	230170	Pipe Nipple	1
2	230171	Pressure Protection Valve	1
3	230172	Fitting	2
4	230173	Tubing (30 Ft.)	1
5	230174	Street Tee	1
6	230175	12V Solenoid Valve	1
7	230176	Fitting	2
8	230177	Street Tee	1
9	230178	Reducer Bushing	1
10	230179	PRESS. Safety Switch (NO 80 PSI)	1
11	230180	Wire (12 Ft.)	2
12	230181	Fuse Assembly	1
13	230182	Female Spade Connector (¼")	3
14	230183	Ring Terminal	2
15	230184	Pressure Switch	1
15A	230185	Wiring Pigtail	1
16	230186	Orifice Fitting	1
17	230187	Lube Hose Assembly	1
18	230188	Rocker Switch 12V	1
19	230189	Switch Bracket	1
20	230190	Face Plate	1
21	230072	Pipe Plug	1
22*	230191	SOL. Bracket Kit	1

* ITEM NOT SHOWN IN ILLUSTRATION

WHEN ORDERING PARTS, SPECIFY MODEL NUMBER, SERIAL NUMBER AND DESCRIPTION OF PARTS REQUIRED

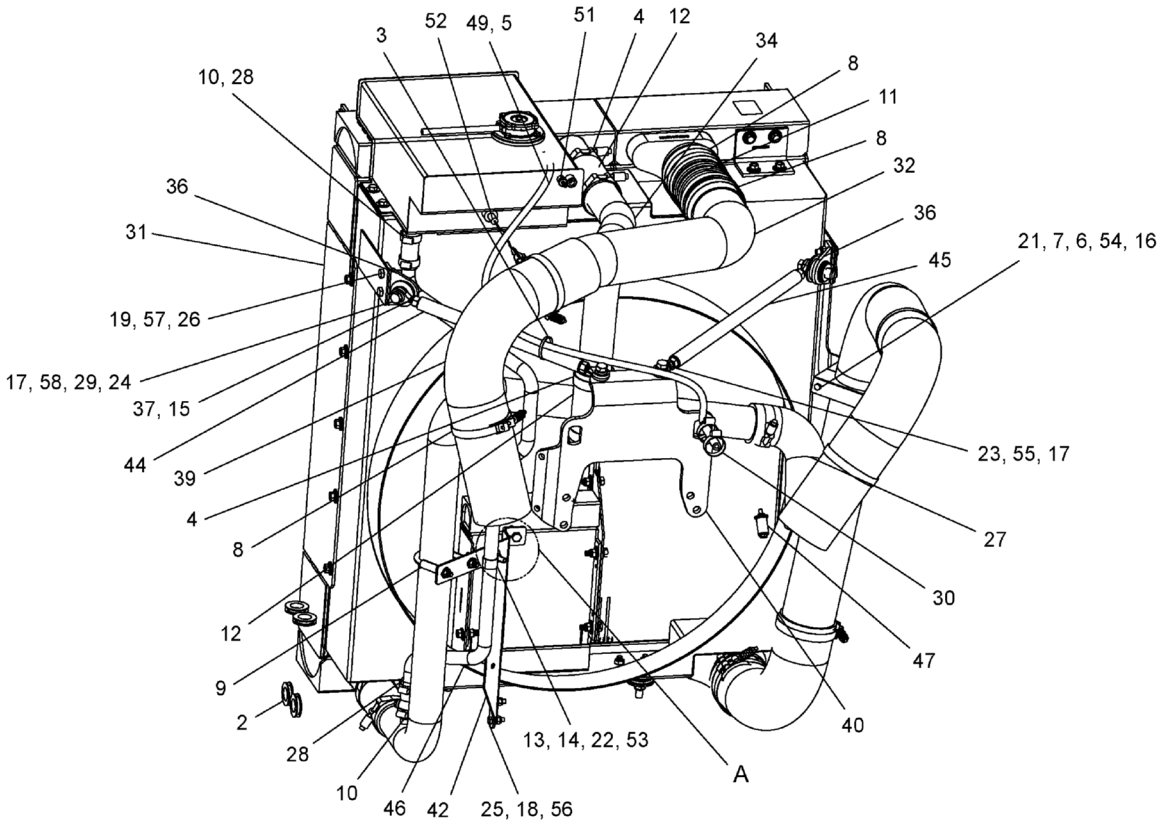

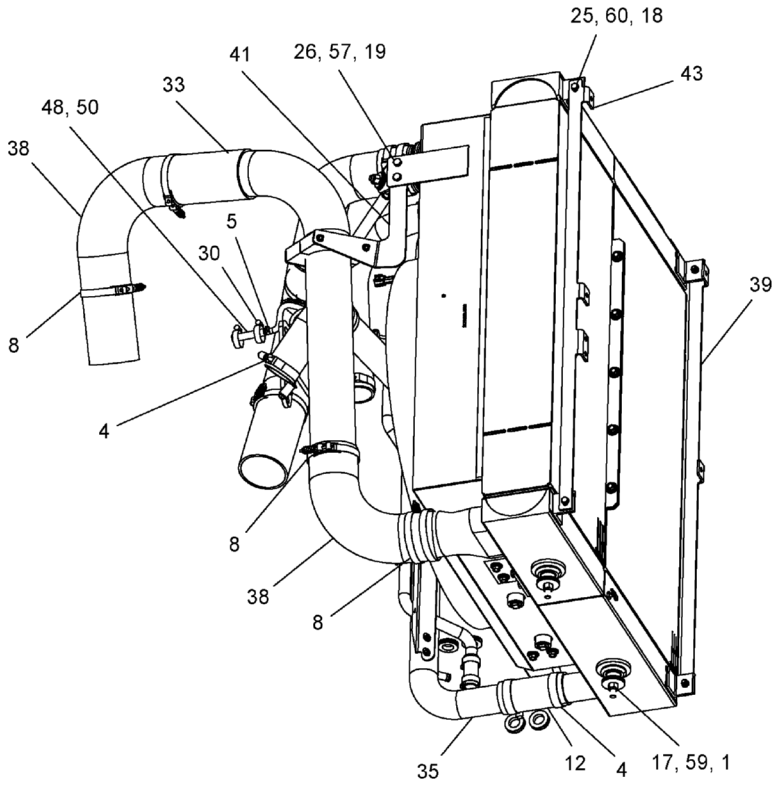

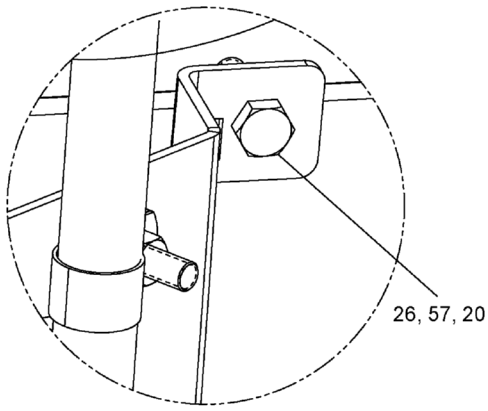

DETAIL A

WHEN ORDERING PARTS, SPECIFY MODEL NUMBER, SERIAL NUMBER AND DESCRIPTION OF PARTS REQUIRED

REF	PART NO.	DESCRIPTION	QTY
	T134265 (Rev. H)	*Cooling Assembly*	
1	1221-128	Mount, Rubber	2
2	1221-66	Grommet	4
3	1222-184	Plastic Tie	1
4	1240-101	Clamp, T-Bolt, SAE 60	8
5	1240-16	Clamp Hose Witt #31	2
6	1240-266	Clamp Body, 2 PCS, 4.00DIA	1
7	1240-267	Cover Plate 5.67 X 1.18	1
8	1240-275	Clamp, Hose, 4.31''-4.55'' DIA.	11
9	1240-3	Clamp	1
10	1240-74	Hose Clamp, .75-1.75	4
11	1243-173	4" DIA X 8" Bellows	1
12	1244-227	Hose, Coolant, 2.50'' ID, 5.0'' LG	17"
13	200B2007-8	Clamp, MED, 1 ID	1
14	N04-375C000-25	Nut, HEX 0.375- 16, ST Z GR5	1
15	N04-500F000-Y8	Nut, HEX 0.50-20, ST YZ GR8	4
16	NYL-250C000-25	Nut, HEX NYL-INS 0.25-20, ST Z G5	2
17	NYL-500C000-25	Nut, Lock, .50C	6
18	NYM-08BM000-41	Nut, NYL-INS M8-1.25, STZ C8	6
19	NYM-10CM000-41	Nut, NYL-INS M10-1.5, STZ C8	4
20	NYM-10CM000-Y8	Nut, NYL-INS M10-1.5, ST SQC G8	1
21	S01-250CE50-25	SCR, HHCS 0.25-20 X 5.50, ST SQC G5	2
22	S01-375CA25-25	SCR, HHCS 0.375-16 X 1.25, ST Z GR5	1
23	S01-500CB00-25	SCR, HHCS 0.50-13 X 2.00, ST SQC G5	2
24	S01-500CB75-25	SCR, HHCS 0.50-13 X 2.75, ST Z GR5	2
25	S07-08BM025-28	SCR, HHCS M8-1.25 X 25 PT, ST SQC C8.8	6
26	S07-10CM035-28	SCR, HHCS M10-1.5 X 35 PT, ST SQC C8.8	5
27	T113435	Hose, 90°	1
28	T113503	Hose,-16, 150, NO END/NO END, 3	2
29	T115097	ISO Mount	2
30	T119206	Clamp, Hose	2
31	**T133440**	Radiator, MB460 (see page 335)	1
32	T133910	Tube, CAC Upper	1
33	T133911	Tube, CAC Lower	1
34	T133912	Tube, Upper RAD	1
35	T133913	Tube, Lower RAD	1
36	T134205	Bracket, Strut	2
37	T135124	Rod End, Male 1/2	4
38	T136545	Elbow, 90°	3
39	T137024	Bracket, A/C	1
40	T137025	Bracket, Strut	1
41	T137067	Bracket	1
42	T137069	Bracket	1
43	T137400	Bracket, A/C	1
44	T144545	Strut, Radiator, MB460, L.H.	1
45	T144546	Strut, Radiator, MB460, R.H.	1
46	T144591	Tube, Surge	1
47	T144599	Plug, Pipe, Expansion, HEX Nut, 3/4"	1
48	T145482	Hose, -6, 500, 75	1
49	T145483	Hose, -4, 500, 840	1

REF	PART NO.	DESCRIPTION	QTY
	T134265 (Rev. H)	*Cooling Assembly*	
50	T145484	Union, Reducer, HBRB-4/HBRB-6	1
51	T145609	Adapter, MNPT-4/HBRB-3	1
52	**T147007**	Assembly, Water Level Sensor (see page 337)	1
53	W07-375X000-20	Washer Lock 3/8 MED	1
54	WAH-25NX000-20	WSH, FL HRD A-NRW 0.25, ST SQC	2
55	WAH-50NX000-20	WSH, FL HRD A-NRW 0.50, ST SQC	2
56	WAR-164X000-22	WSH, FL TYPA-REG 08, ST SQC G2	2
57	WAR-190X000-22	WSH, FL TYPA-REG 10, ST SQC G2	5
58	WBR-50RXA37-20	WSH, FL TYPB-REG 0.50, ST SQC	2
59	WFT-500XB00-20	WSH, FNDR 0.50 X 2.00 X 0.125, ST SQC	2
60	WMF-80MX000-20	WSH, Flat M8 DIN125, ST Z	8

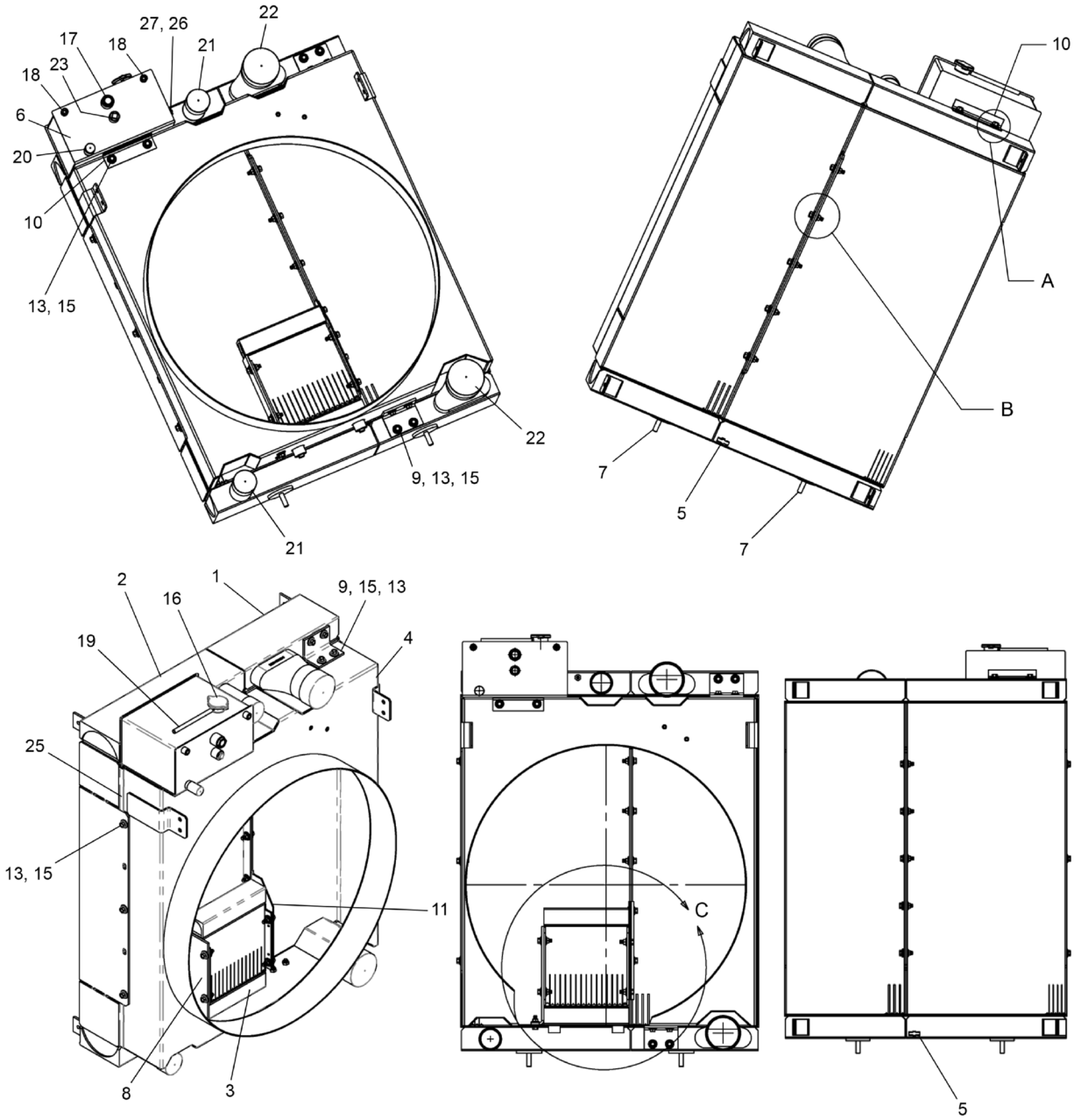

WHEN ORDERING PARTS, SPECIFY MODEL NUMBER, SERIAL NUMBER AND DESCRIPTION OF PARTS REQUIRED

REF	PART NO.	DESCRIPTION	QTY
	T133440 (Rev. A)	*Radiator, MB460*	
1	227739	CAC	1
2	227740	RAD	1
3	227741	Fuel Cooler Assembly	1
4	227742	Shroud	1
5	227743	Draincock, 1/4"NPT, Straight	1
6	227744	Surge Tank Assembly	1
7	227745	STUD FUL THD 1/2-13 X 2-1/2" WZ	2
8	227746	Oil Cooler Small MTG Bracket	1
9	227747	Shroud MTG Bracket	2
10	227748	Surge Tank MTG Bracket	2
11	227749	Oil Cooler LG MTG Bracket	1
12	227750	BLT HX FLG SRRT 3/8-16 X 1-1/4" GR5 ZTR	16
13	227751	FLW 3/8 X 1" OD GR5 ZTR	47
14	227752	Nut, FLGHD - 3/8"-16	16
15	227753	BLT HX FLG SRRT 3/8-16 X 1" GR5 ZTR	13
16	227754	Radiator Cap 14 psi	1
17	227755	3/4" NPT Sight Window	1
18	227756	Plug - Plastic (Tapered)	2
19	227757	Hose 5/16" ID x 7/16" OD (Overflow)	1
20	227758	Vinyl Cap - Protective	1
21	227759	Vinyl Cap - Protective	2
22	227760	Vinyl Cap - Protective	2
23	227761	Plastic Plug - Threaded	3
24	227762	BLT HX FLG SRRT 3/8-16 X 3/4" GR5 ZTR	2
25	227763	Locking Profile Seal	13 FT
26	227764	BARB- Hose 1/4"NPT	1
27	227765	Vinyl Cap - Protective	1

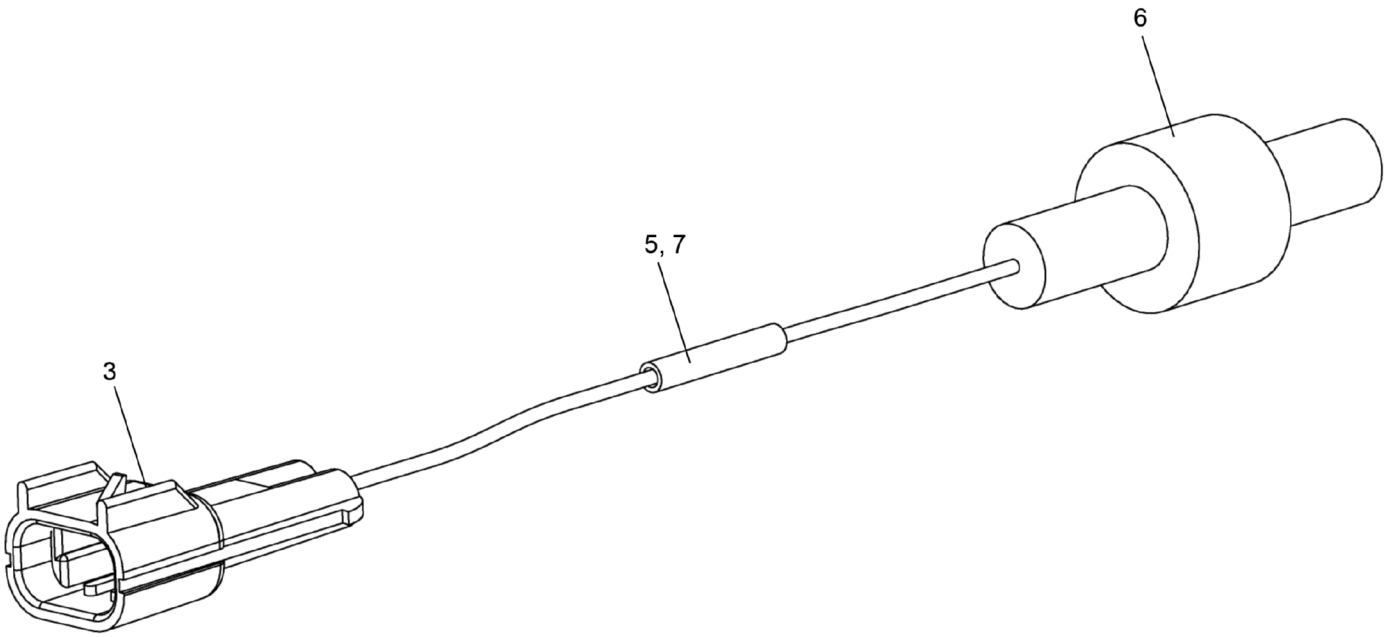

REF	PART NO.	DESCRIPTION	QTY
	T147007 (Rev. A)	*Assembly, Water Level Sensor*	
1*	12010293	Seal	1
2*	12048159	Terminal, Wire Range 18-20 AWG	2
3	15300002	Connector, 2 Way Black Metri-Pack	1
4*	15300014	Lock Secondary TPA	1
5	291-200-RC	Resistor, 200 OHM	1
6	2XC13	Coolant Level Sensor	1
7	ITCSN-0800-25-U	Heat Shrink, Adhesive Lined & UV Resistant	1

* ITEM NOT SHOWN IN ILLUSTRATION

WHEN ORDERING PARTS, SPECIFY MODEL NUMBER, SERIAL NUMBER AND DESCRIPTION OF PARTS REQUIRED

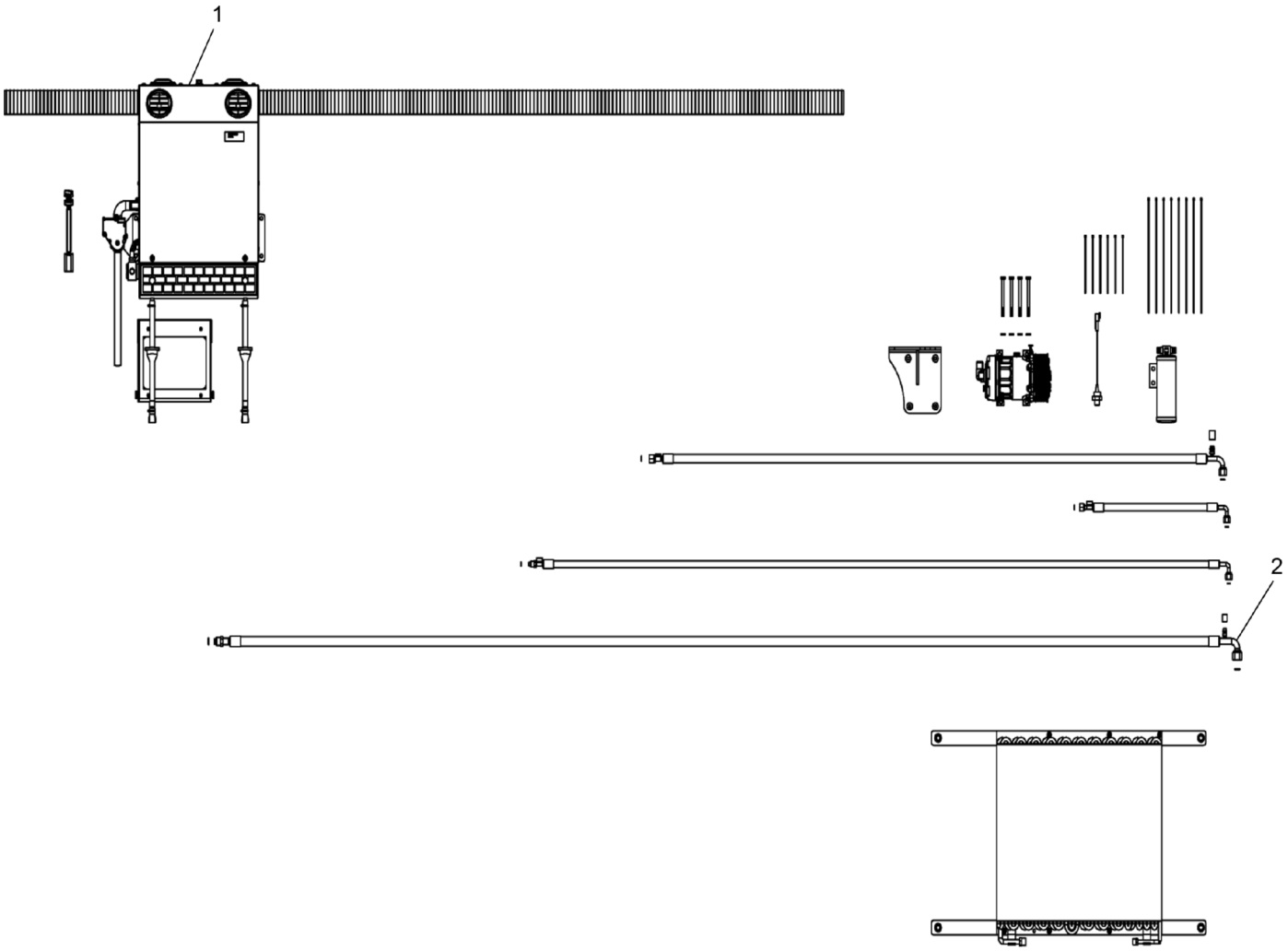

REF	PART NO.	DESCRIPTION	QTY
	T135514 (Rev. A)	*Kit, AC System-MB460*	
1	**T106863**	System, Blower 12V With Water Valve (see page 339)	1
2	**T135512**	Kit, AC Components-MB460 (see page 344)	1

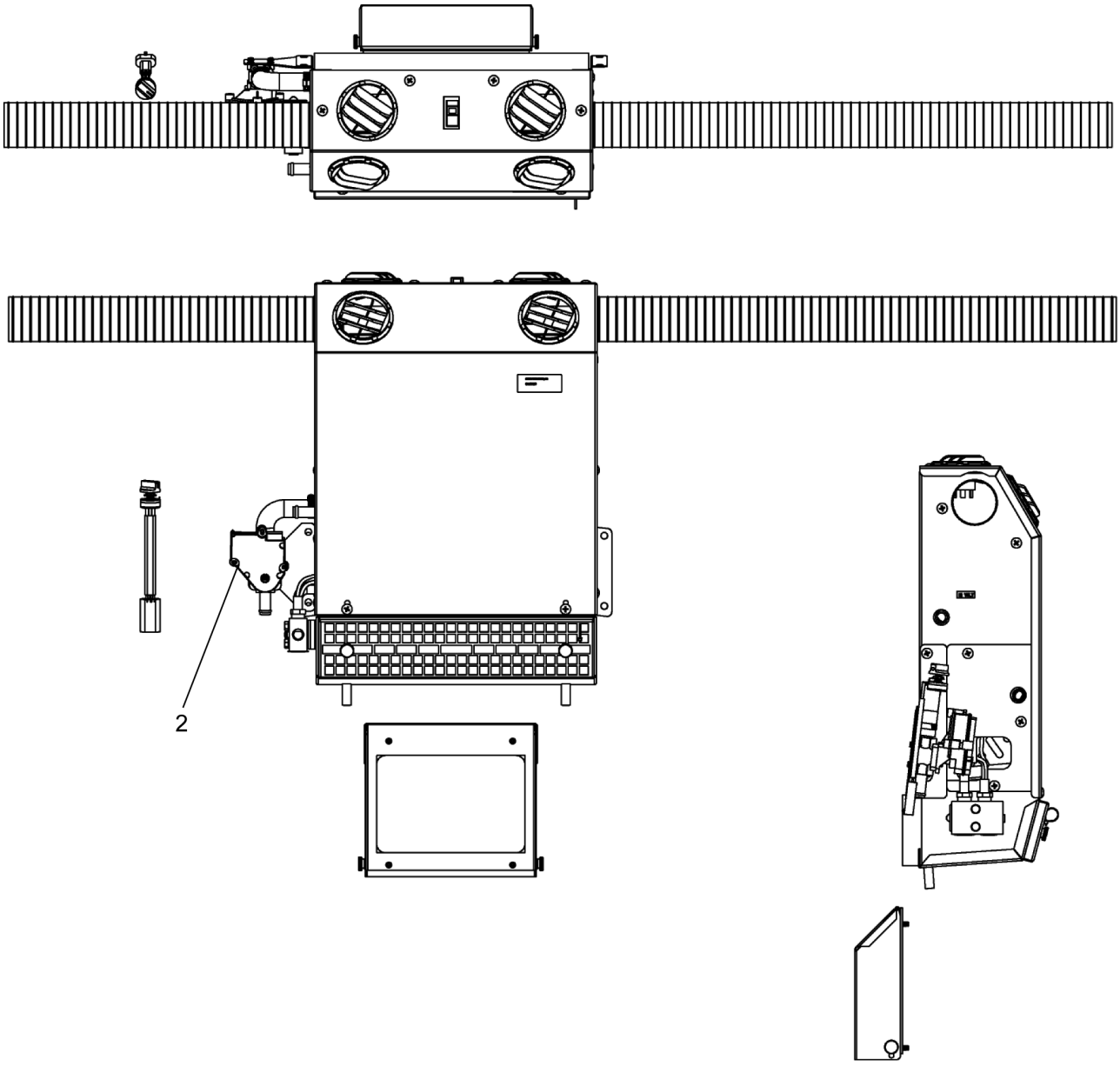

REF	PART NO.	DESCRIPTION	QTY
	T106863 (Rev. A)	*System, Blower 12V With Water Valve*	
1*	**223800**	Blower Unit VW7 2AH (see page 340)	1
2	**223801**	Kit, ELECT WTR VLV (see page 343)	1

* ITEM NOT SHOWN IN ILLUSTRATION

WHEN ORDERING PARTS, SPECIFY MODEL NUMBER, SERIAL NUMBER AND DESCRIPTION OF PARTS REQUIRED

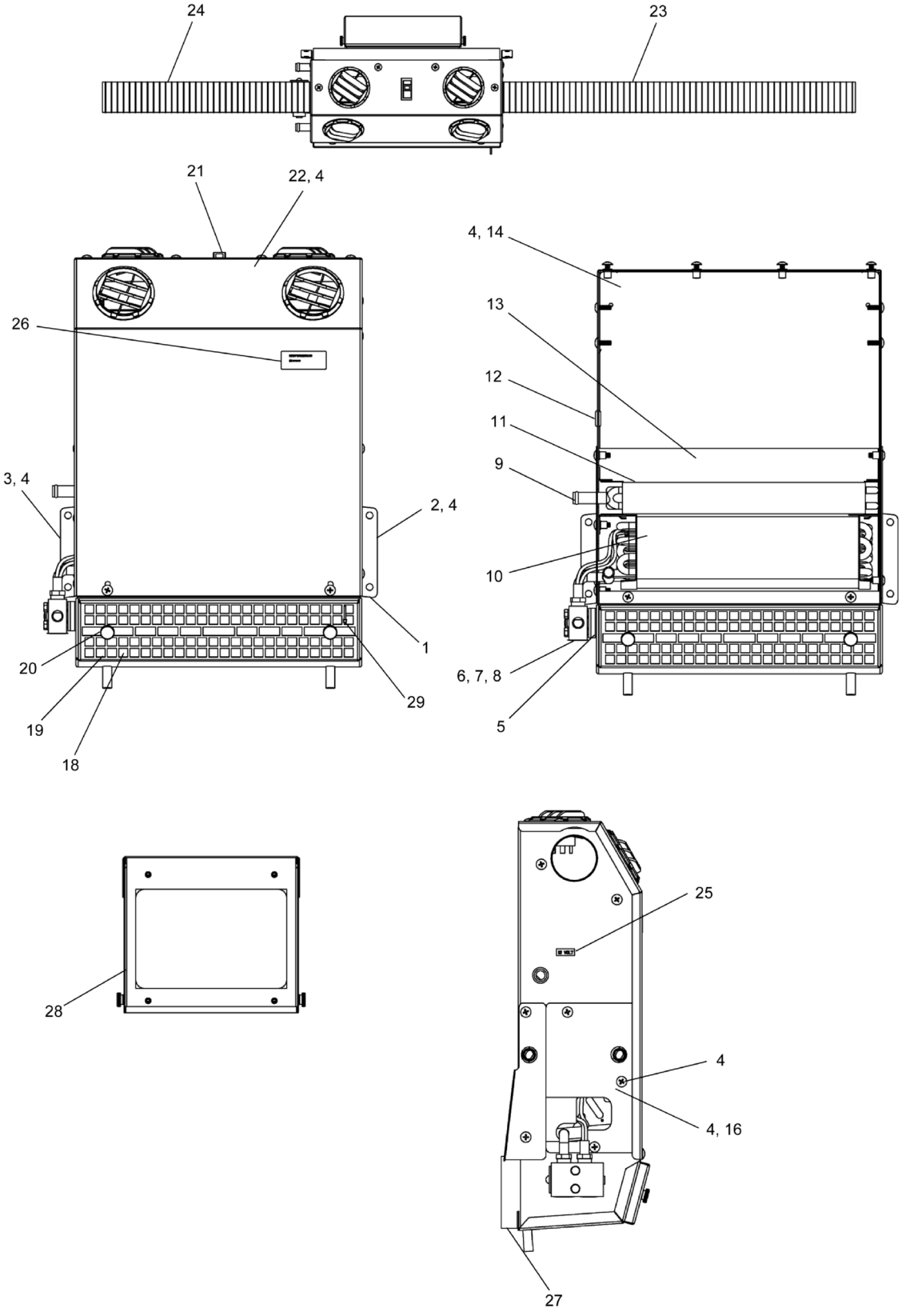

WHEN ORDERING PARTS, SPECIFY MODEL NUMBER, SERIAL NUMBER AND DESCRIPTION OF PARTS REQUIRED

REF	PART NO.	DESCRIPTION	QTY
	223800 (Rev. 00)	*Blower Unit VW7 2AH*	
1	223809	Weldment, Housing	1
2	223810	BRKT, MTG Right	1
3	223811	BRKT, MTG Left	1
4	221862	Screw, PTH 1/4-20 X 3/4 Black Zinc	17
5	223812	Spacer Plastic EXP Valve	1
6	**223813**	ASSY, EVAP Coil (see page 163)	1
7	221831	HHCS 1/4-20 NC X 2 ZP	2
8	221817	Washer, Lock 1/4 YZ	2
9	223814	Coil, Heat	1
10	223815	Bracket, Coil Front	1
11	223816	Grommet, Hole .281 (.188 ID)	1
12	223817	Grommet, Hole .75	1
13	219733	Thermostat, Fixed	1
14	**223818**	ASSY, Blower 12V (see page 342)	1
15*	223819	Wire Harness	1
16	223820	Plate, Cover	1
17*	223821	TAR Tape	8"
18	219739	Filter, RECIRC	1
19	223822	Bracket, Filter	1
20	219738	Knob, 1/4-20X1"	2
21	223823	Switch, 12V Rocker W/ Green LED	1
22	223824	Cover ASSY, VW72	1
23	223825	Flex Tube, 2 1/2" X 6.5 FT	1
24	223826	Flex Tube, 2 1/2" OD X 18"	1
25	223827	Decal, 12 Volt	1
26	221841	Label, KW Serial#	1
27	223828	Gasket, MD VW7 Air Intake	1
28	**219836**	Outside Air Kit (see page 164)	1
29	221873	Tie, Plastic 4"	1

* ITEM NOT SHOWN IN ILLUSTRATION

WHEN ORDERING PARTS, SPECIFY MODEL NUMBER, SERIAL NUMBER AND DESCRIPTION OF PARTS REQUIRED

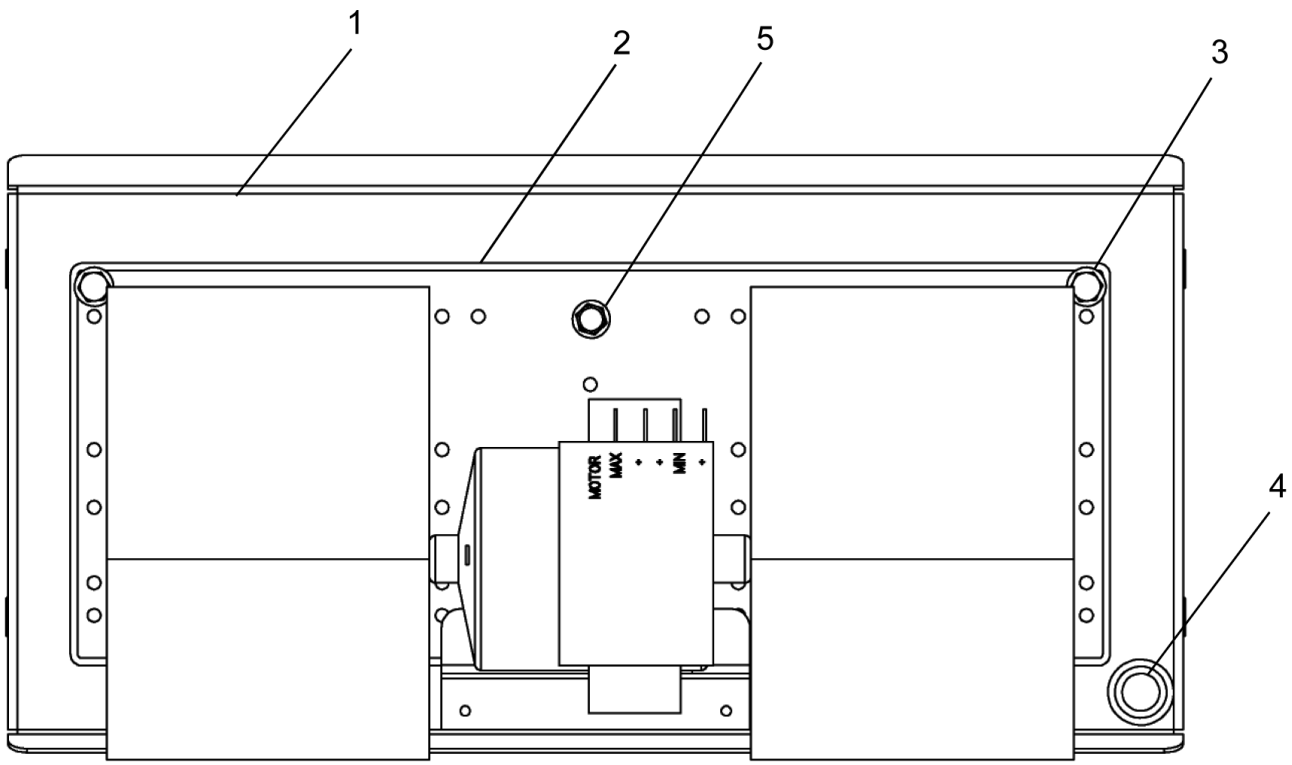

REF	PART NO.	DESCRIPTION	QTY
	223818 (Rev. 00)	*ASSY, Blower 12V*	
1	223832	Weldment, Blower Plate	1
2	219735	Blower ASSY 12V W/ RES.	1
3	223833	Screw, HWH #14-10 X 1.25"	2
4	223817	Grommet, Hole .75	1
5	223834	Screw, HWH 1/4-14X3/4 Type AB	1

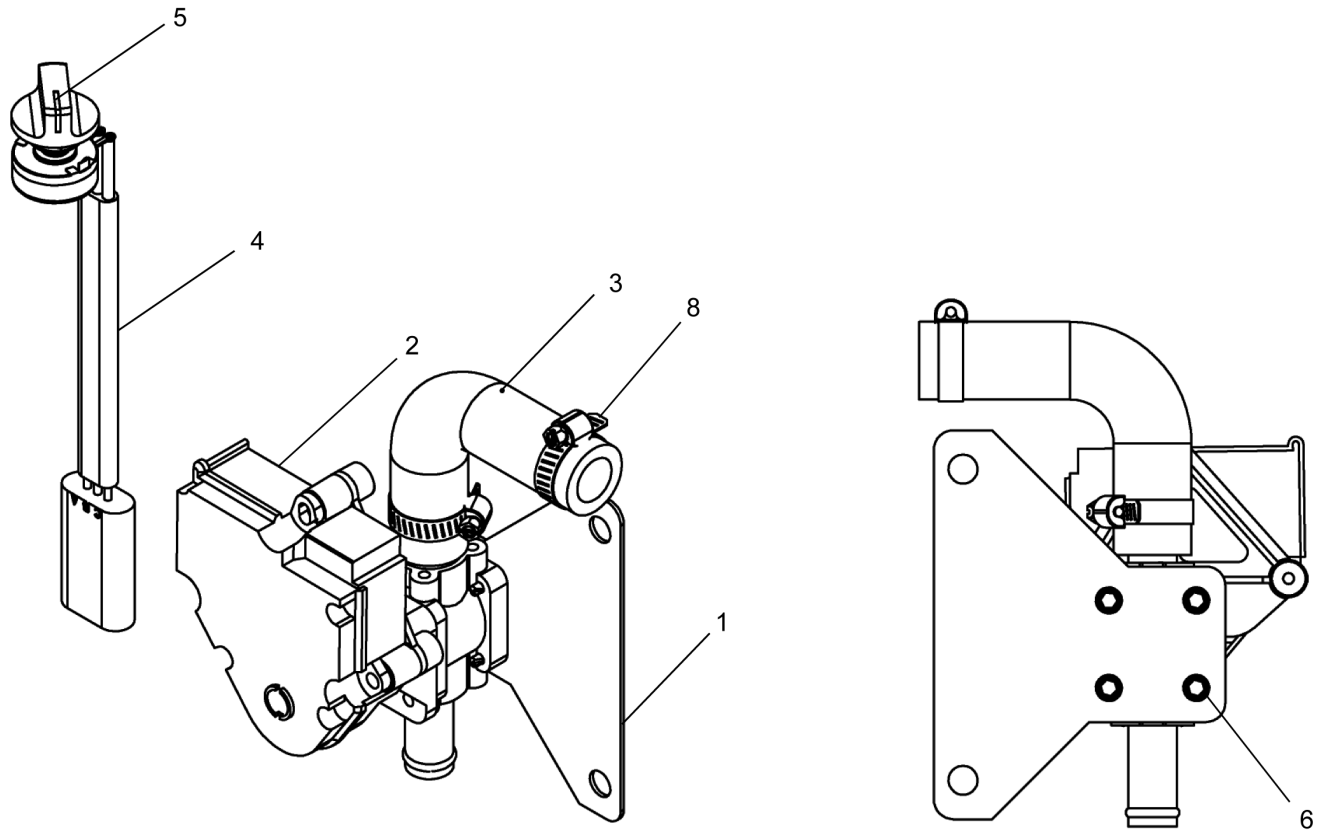

REF	PART NO.	DESCRIPTION	QTY
	223801 (Rev. 00)	*Kit, ELECT WTR VLV*	
1	223802	BRKT, Water Valve	1
2	223803	Valve, Heat 12V Motorized	1
3	223804	Hose, 90° Formed	1
4	219786	Potentiometer, 7/8" Shaft	1
5	215845	Knob W/Setscrew	1
6	221869	Screw, #8X1/2, Self Drilling	4
7*	223807	Wire Harness	A.R
8	223808	Clamp, Heater Hose 7/16" to 1"	2

* ITEM NOT SHOWN IN ILLUSTRATION

WHEN ORDERING PARTS, SPECIFY MODEL NUMBER, SERIAL NUMBER AND DESCRIPTION OF PARTS REQUIRED

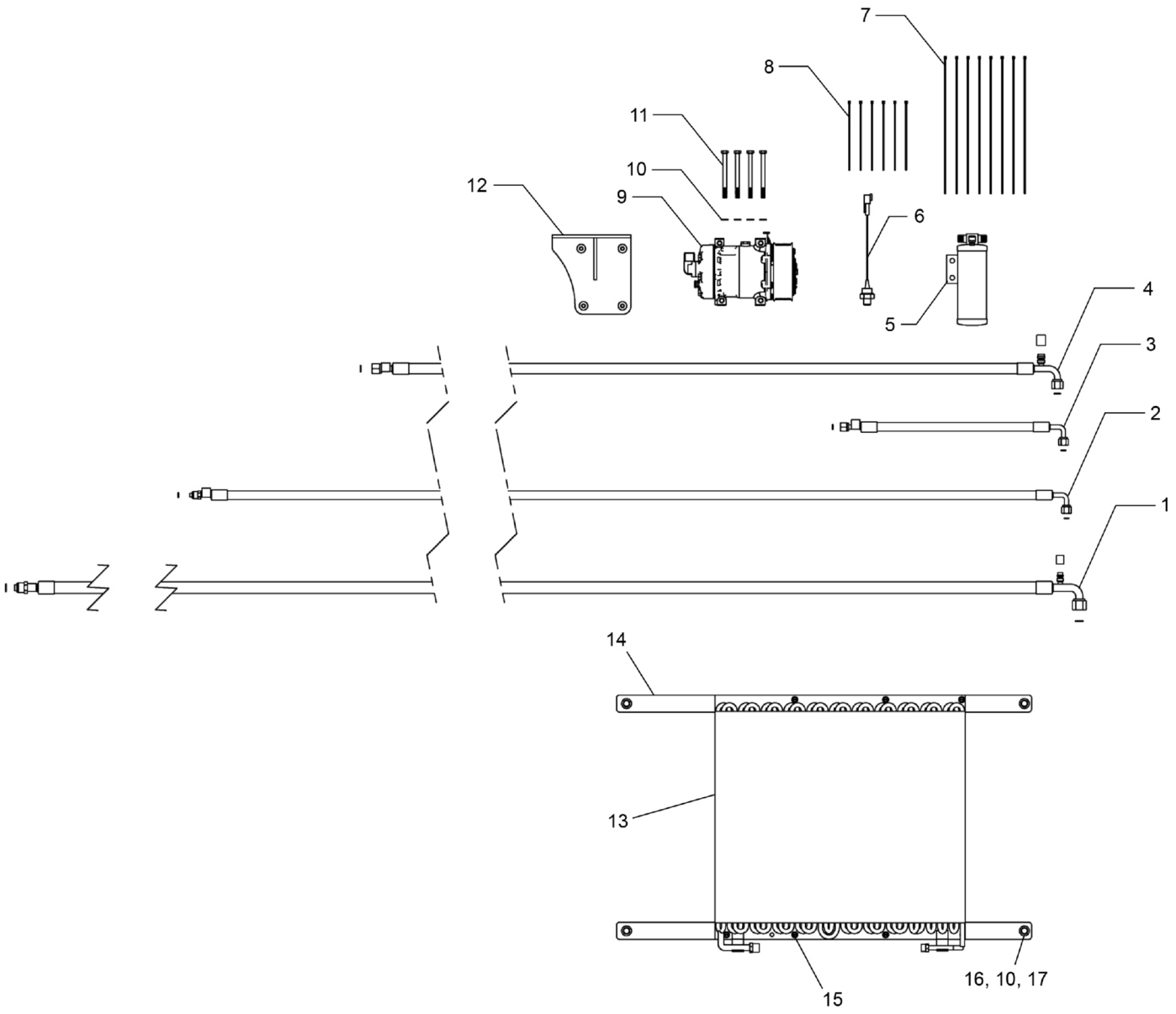
7
8
11
10
12
9
6
5
4
3
2
1
14
13
15
16, 10, 17

REF	PART NO.	DESCRIPTION	QTY
	T135512 (Rev. A)	*Kit, AC Components-MB460*	
1	227768	Hose ASSY. #10 EVAP - COMP MB460	1
2	227733	Hose ASSY, #6 RD-TXV	1
3	227734	Hose ASSY, #6 COND-RD	1
4	227766	Hose ASSY, #8 COMP-COND MB460	1
5	T113391	Drier, O-RING 2.5 X 8 W/ BRKT	1
6	T116527	Switch, AC Binary W/ DEUTSCH	1
7	216050	Tie Plastic 15"	8
8	221874	Tie, Plastic 7"	6
9	T134489	Compressor, SD7H15 12V PV10 119 Direct MNT VOR	1
10	222823	Washer Lock .320 ID, YZ	8
11	222822	HHCS M8-1.25 X 100 GR 8.8 ZP	4
12	222880	BRKT, COMP MTG	1
13	223843	Coil, COND	1
14	227737	Bar, COND MTG (T500-1/T700)	2
15	221894	HWH Slotted 1/4-20 X .5" - Self Tapping	6
16	227738	HHCS 5/16 NC X 1 1/4 GR8 FT	4
17	221805	Washer, Flat 5/16" ZP	4

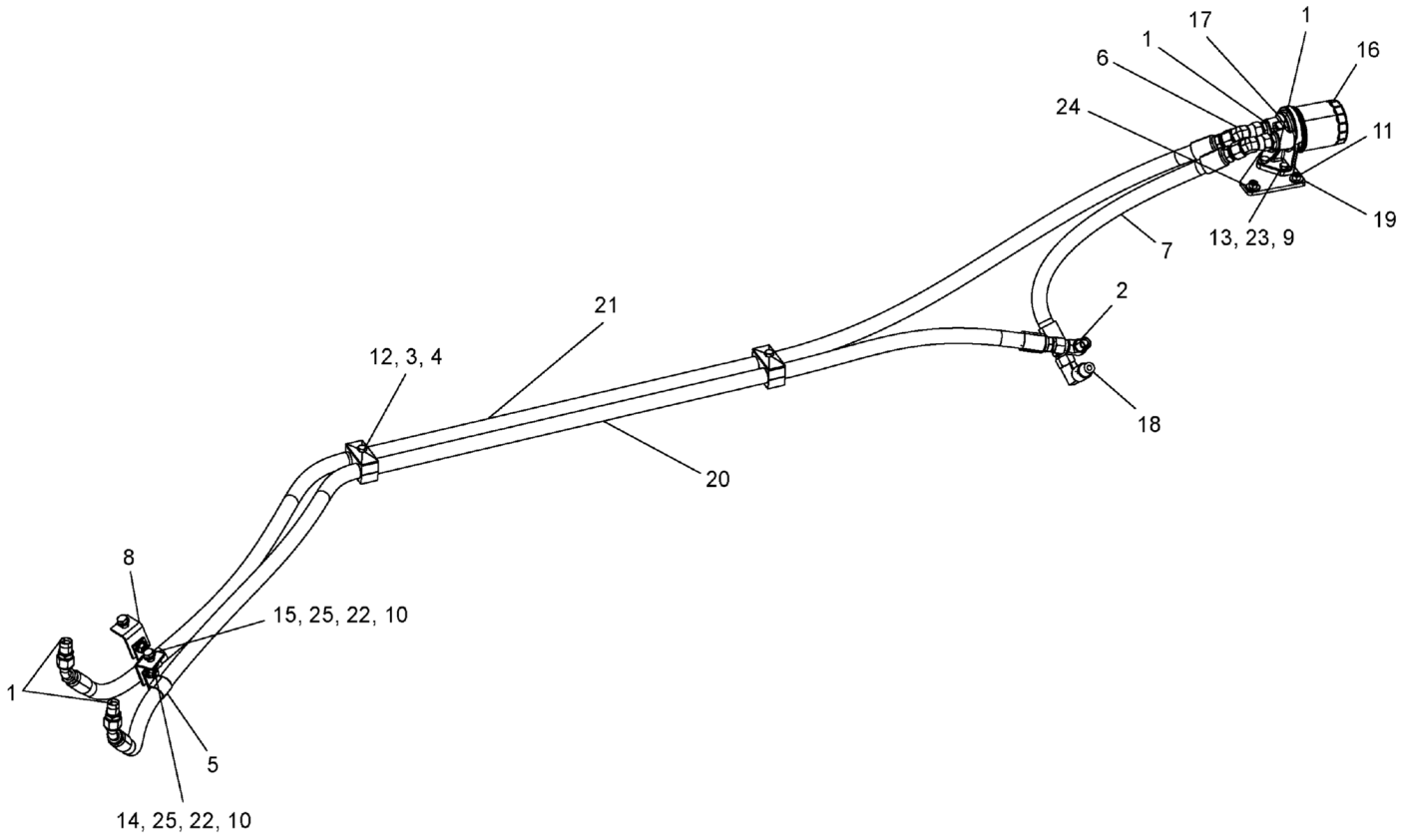

WHEN ORDERING PARTS, SPECIFY MODEL NUMBER, SERIAL NUMBER AND DESCRIPTION OF PARTS REQUIRED

LOAD KING BY CUSTOM TRUCK ONE SOURCE

TRANSMISSION FILTER ASSEMBLY (EXPORT & DOMESTIC)

DATE: Released 08-2018

MODEL: 480-126

PAGE: 346

CHAPTER 2

REF	PART NO.	DESCRIPTION	QTY
	T135777 (Rev. C)	*Transmission Filter Assembly*	
1	1219-283	Adapter, MJIC-10/MNPT-8	4
2	1219-464	Elbow, 90°, MNPTF-8/MJIC-10	1
3	1240-154	Cover Plate, Dual 2.55 X 1.18	2
4	1240-171	Clamp Body, 2 PCS, 1.00DIA Dual	2
5	1240-29A	Clip, P	2
6	375-1701	Elbow, 45, MJIC-10/FJIC-10SW	2
7	709-5700-29	Hose, -10, 1875, FJICSW/FJICSW, 737	1
8	717-0602	Mount, Clamp	2
9	N24-08BM000-28	Nut, HEX M8-1.25, DIN934, STZ CL	3
10	N24-10CX000-28	Nut, HEX M10-1.5, DIN934, ST SQC C8.8	4
11	NYL-312C000-25	Nut, HEX NYL-INS 0.312-18, ST SQC G5	2
12	S01-312CA75-25	SCR, HHCS 0.3125-18 X 1.75, ST SQC G5	2
13	SMF-08BM030-28	SCR, HHCS M8-1.25 X 30 FT, ST SQC C8.8	3
14	SMF-10CM025-28	SCR, HHCS M10-1.5 X 25 FT, ST Z 8.8	2
15	SMF-10CM030-28	SCR, HHCS M10-1.5 X 30 FT, ST Z 8.8	2
16	T134119	Filter, Transmission	1
17	T134276	Bracket, Filter	1
18	T134277	Elbow 1/2 NPT Long	1
19	T134278	Plate, Filter Mount	1
20	T135779	Hose, -10, 1875, FJICSW/FJIC45, 2350	1
21	T135780	Hose, -10, 1000, FJICSW/FJIC45, 2750	1
22	W16-010X000-GP	WSH, Lock, SPLT M10 D127B, STL	4
23	W16-80MX000-G2	WSH, Lock, SPLT M8 D127B, ST Z	3
24	WAW-31WX000-20	WSH, FL TYPA-WID 0.3125, ST SQC	2
25	WMH-010X000-20	WSH, Flat, Hard M10 D125, ST SQC	8

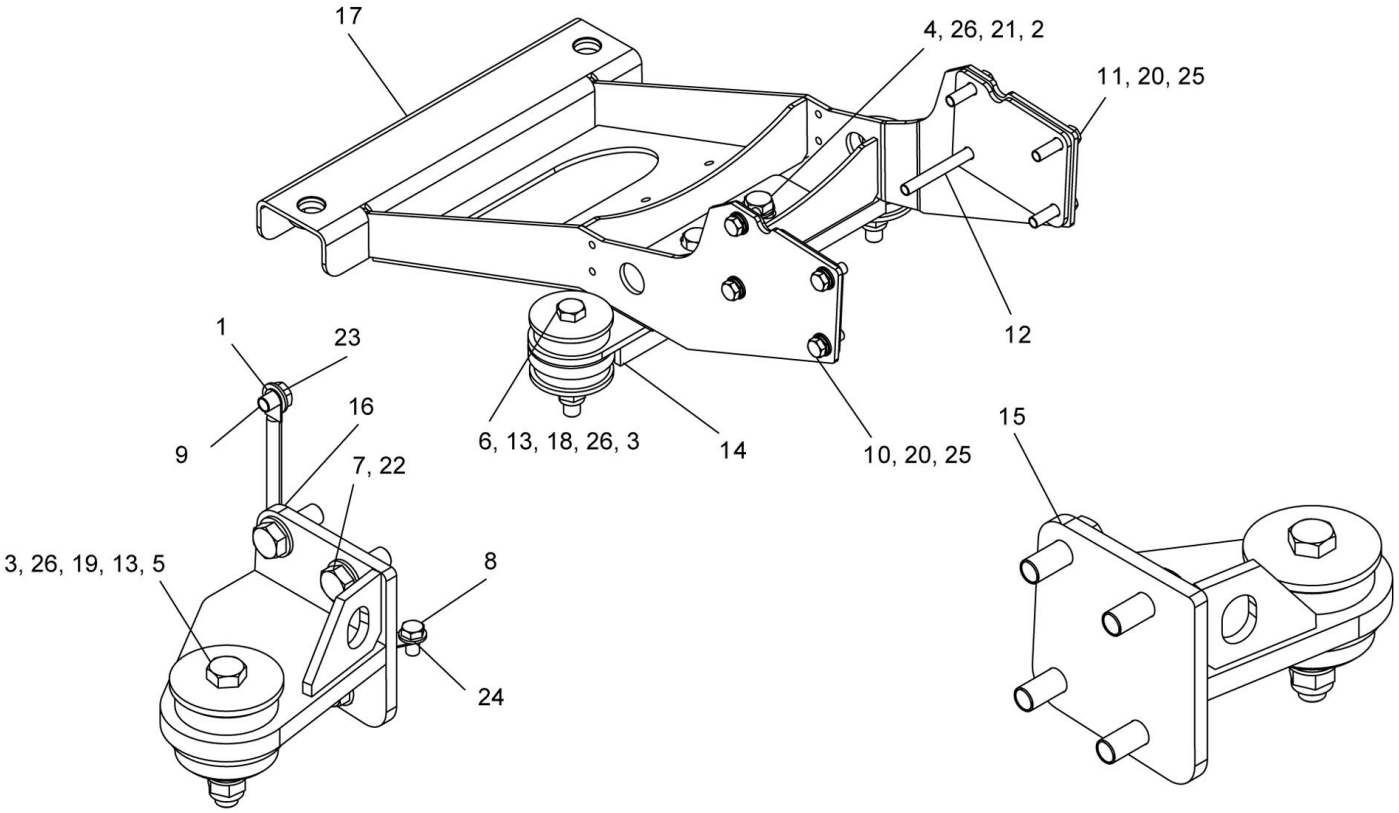
17
4, 26, 21, 2
11, 20, 25
1
23
16
9
7, 22
6, 13, 18, 26, 3
14
10, 20, 25
12
15
3, 26, 19, 13, 5
8
24

REF	PART NO.	DESCRIPTION	QTY
	T136319 (Rev. D)	*Mounting, Export Engine*	
1	1223-509	Cable, Ground	1
2	N24-B0FM000-28	Nut, HEX M20-2.5, DIN 934, ST SQC C8.8	2
3	NYM-20FM000-Y8	Nut, NYL-INS M20-2.5, ST SQC G8	4
4	S07-B0FM100-28	SCR, HHCS M20-2.5 X 100 PT, ST SQC C8.8	2
5	S07-B0FM130-28	SCR, HHCS M20-2.5 X 130 PT, ST SQC C8.8	2
6	S07-B0FM140-28	SCR, HHCS M20-2.5 X 140 PT, ST SQC C8.8	2
7	SHF-750CB00-Y8	SCR, HHCS FT 0.75-10 X 2.00, ST SQC G8	8
8	SMF-12DM020-28	SCR, HHCS M12-1.75 X 20 FT, ST SQC C8.8	1
9	SMF-14CM016-28	SCR, HHCS M14-1.5 X 16 FT, ST SQC C8.8	1
10	SMF-14CM035-28	SCR, HHCS M14-1.5 X 35 FT, ST SQC C8.8	4
11	SMF-14CM055-28	SCR, HHCS M14-1.5 X 55 FT, ST SQC C8.8	3
12	SMF-14CM125-28	SCR, HHCS M14-1.5 X 125 FT, ST SQC C8.8	1
13	T104664	Washer, Snubbing	6
14	T133073	Beam Front Weldment	1
15	T133076	Mount, Transmission Weld, RH	1
16	T133077	Mount, Transmission Weld, LH	1
17	T134377	Front Mount Assembly	1
18	T135781	Mount, ISO	2
19	T136321	Mount, ISO	2
20	W16-014X000-GP	WSH, Lock, SPLT M14 D127B, STL	8
21	W16-020X000-G2	WSH, Lock, SPLT M20 D127B, ST SQC	2
22	WAH-75NX000-20	WSH, FL HRD A-NRW 0.75, ST SQC	8
23	WMF-014X000-20	WSH, Flat M14 DIN125, ST SQC	1
24	WMH-012X000-20	WSH, Flat, Hard M12 D125, ST SQC	1
25	WMH-014X000-20	WSH, Flat, Hard M14 D125, ST SQC	8
26	WMH-020X000-20	WSH, Flat, Hard M20 D125, ST SQC	8

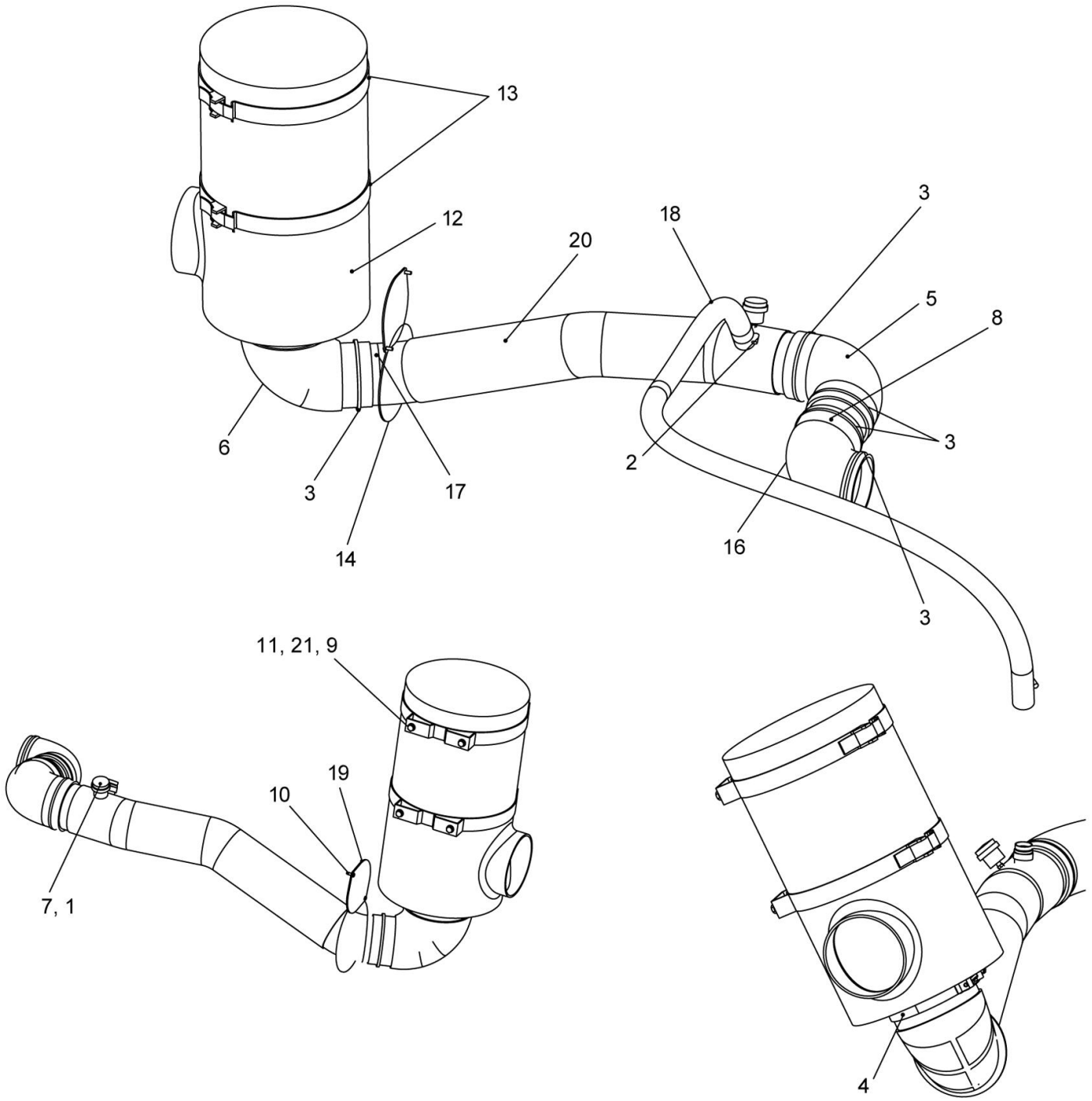

WHEN ORDERING PARTS, SPECIFY MODEL NUMBER, SERIAL NUMBER AND DESCRIPTION OF PARTS REQUIRED

LOAD KING BY CUSTOM TRUCK ONE SOURCE

AIR INTAKE ASSEMBLY, GP-460

DATE: Released 08-2018

MODEL: 480-126

PAGE: 350

CHAPTER

2

REF	PART NO.	DESCRIPTION	QTY
	T133326 (Rev. E)	*Air Intake Assembly, GP-460*	
1	1219-99	Nipple Close 215PN-2	1
2	1240-15	Hose-Clamp 3/4"	2
3	1240-245	Clamp 5.38 TI 5.69	5
4	1240-246	7.25 / 7.56 Clamp	1
5	1243-156	Elbow, 90° 5 INCH ID	1
6	1243-157	Elbow 90° 5" to 7" ID	1
7	1243-50	Filter Minder	1
8	717-0248	Tube, Insert Connection	1
9	NYM-10CM000-Y8	Nut, NYL-INS M10-1.5, ST SQC G8	4
10	S46-06AM016-28	BHSHCS, M6-1.0 X 16	12
11	SMF-10CM025-E8	SCR, HHCS M10-1.5 X 25 FT, SS 18-8	4
12	T122173	Cleaner, Air	1
13	T122174	Band Clamp, 13.5"	2
14	T138390	Seal	1
15*	T138681	Grill, Front	1
16	T139206	5" X 90° Rubber Elbow	1
17	T147264	Tube, Air Intake	1
18	T148264	Hose, 1-3/8" ID	1
19	T148357	Cover Plate	1
20	T150413	Insulation, Sleeve, 5 INCH ID	2.67 FT
21	WMF-010X000-E8	WSH, Flat M10 DIN125, S-S 18-8	8

* ITEM NOT SHOWN IN ILLUSTRATION

WHEN ORDERING PARTS, SPECIFY MODEL NUMBER, SERIAL NUMBER AND DESCRIPTION OF PARTS REQUIRED

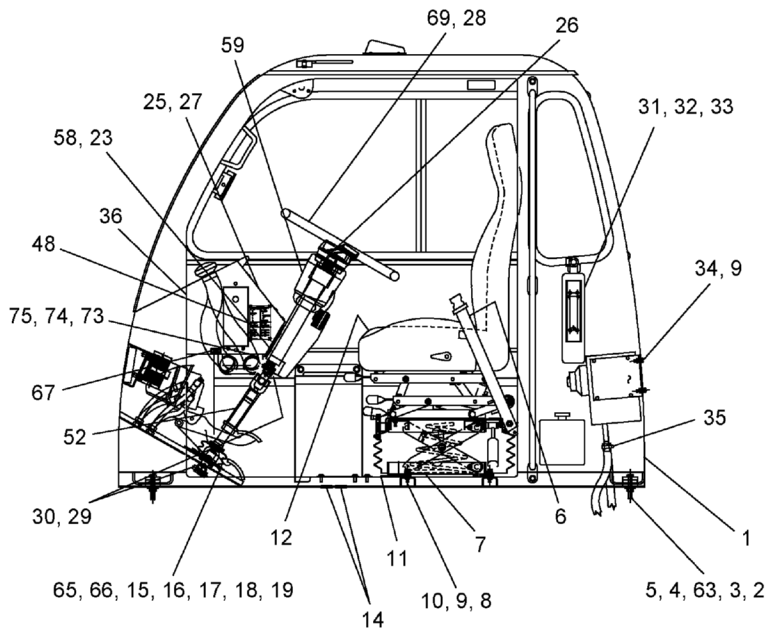

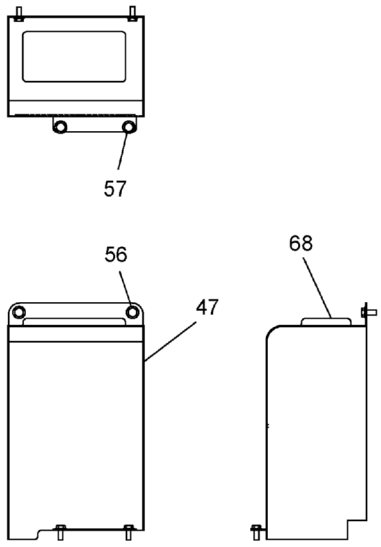

DETAIL OF SHIFT TOWER ASSY

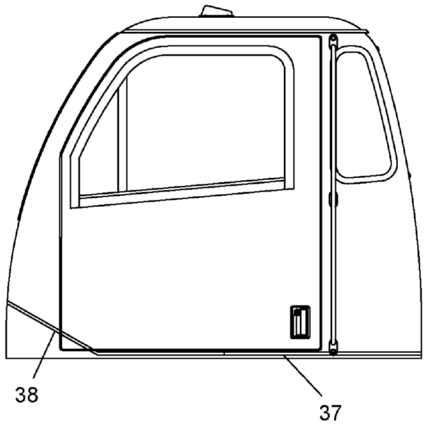

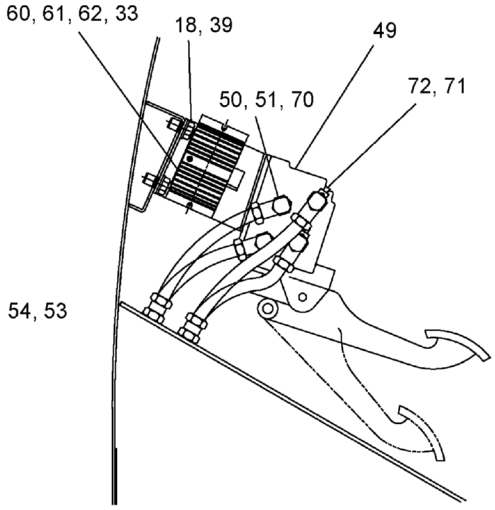

DETAIL OF BRAKE TREADLE

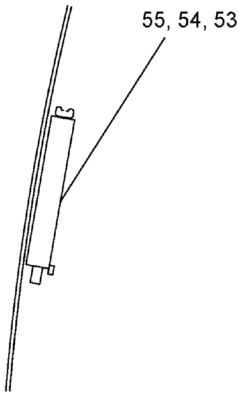

DETAIL OF ADM2

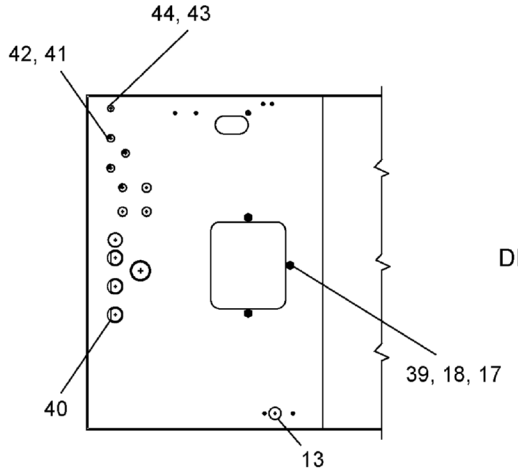

DETAIL OF FLOOR

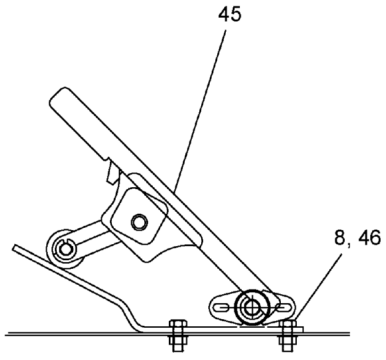

DETAIL OF FOOT PEDAL

REF	PART NO.	DESCRIPTION	QTY
	T154860 (Rev. A)	*Lower Cab Assembly, MB460, 2017*	
1	**T150876**	Cab, Carrier, 2017 (see page 355)	1
2	S01-500CC00-25	SCR, HHCS 0.50-13 X 3.00, ST Z GR5	4
3	NYL-500C000-25	Nut, Lock, .50C	4
4	707-7169	Washer	8
5	1221-128	Mount, Rubber	4
6	45528	Seat Belt ASSY	1
7	707-7712	Spacer	2
8	S01-312CA00-25	Capscrew, .31C X 1.00	6
9	NYL-312C000-25	Nut, HEX NYL-INS 0.312-18, ST SQC G5	8
10	WAW-31WX000-20	WSH, FL TYPA-WID 0.3125, ST SQC	4
11	717-0700	Plate, Cover	1
12	714-1287	Seat, High Back	1
13	1222-276	2" Dome Plug	2
14	1221-62	Grommet	2
15	45007	Cover	1
16	SHF-375C750-25	SCR, HHCS FT 0.375-16 X 0.75, STZ G5	4
17	N04-375C000-25	Nut, HEX 0.375- 16, ST Z GR5	7
18	W07-375X000-20	Washer Lock 3/8 MED	11
19	SHS-312X750-20	Screw, Self Tap, .31C X .75	4
20*	719A0228	Louver	2
21*	719-0481	Hose, Duct	1
22*	1240-94	Clamp	4
23	S14-375CA50-HB	Capscrew, .38C X 1.50	4
24*	730-2168	Sticker	8
25	1202-9	Bolt, #10-32 X .50	12
26	1205-234	Nut, Jam, 7/8-20	1
27	**T156049**	Lower Dash Assembly, OM460, 2017 (see page 365)	1
28	717-1215	Steering Wheel	1
29	SHF-438FA75-Y8	HHCS, .44F X 1.75, GRD 8	4
30	NYL-438F000-25	Nut, Lock, .44F	4
31	1222-217	Extinguisher, Fire	1
32	1202-7	Bolt, Stove, #10-24 X 1.00	4
33	1230-6	KIPS, #10-24	6
34	S01-312CA50-25	Capscrew, .31C X 1.50	4
35	200B0087-2	Clamp	4
36	709-6827-P6	Bracket	1
37	714-0258	Mat, Floor-Rear	1
38	714-0257	Mat, Floor-Front	1
39	SHF-375CA00-25	HHCS 3/8 NC X 1 GR5 Zinc	7
40	1221-45	Grommet	4
41	12019-388	Bulkhead Union #62NBH	4
42	12203-30	Tube, 3/8 Inch Black	3
43	12019-387	Union	2
44	12179-31	Tube, Yellow	1
45	300-00501	Throttle Pedal, ELECT Control	1
46	W07-312X000-20	WSH, LCK, MED SPLT 0.3125, ST SQC	2
47	T133441	Shift Tower Ultrashift	1
48	T156182	Decal, Fuse Block, Lower TC Cab	1
49	**714A1481**	Brake Assembly (see page 369)	1

* ITEM NOT SHOWN IN ILLUSTRATION

WHEN ORDERING PARTS, SPECIFY MODEL NUMBER, SERIAL NUMBER AND DESCRIPTION OF PARTS REQUIRED

REF	PART NO.	DESCRIPTION	QTY
	T154860 (Rev. A)	*Lower Cab Assembly, MB460, 2017*	
50	12202-18	Tube, 1/4 Inch Black	2
51	12204-6	Tube, 1/2 Inch Black	1
52	T127250	Column, Steering Shaft	1
53	SMF-06AM025-28	SCR, HHCS M6-1 X 25 FT, ST Z 8.8	2
54	722-0165-1	VELCRO Hook	12 IN
55	722-0166-1	VELCRO Loop	12 IN
56	WAW25WX000-20	WSH, FL TYPA-WID 0.25 ST 2	4
57	SHS-250X750-20	Screw, Self Tap, .25C X .75	4
58	WAW-37WX000-20	WSH, FL TYPA-WID 0.375, ST Z	4
59	717-1213	Column, Steering	1
60	1223-1046	DRL Module	1
61	SL4-190C500-25	#10-24 X .50 LG SCR.	2
62	N23-190C000-20	Nut, HEX, MACH 10-24, ST Z	2
63	WAW-50WX000-20	WSH, FL TYPA-WID 0.50, ST SQC	4
64*	1222-202	Plastic Tie	8
65	714-1603	Boot, Steering Shaft	1
66	T127251	Seal, Steering Shaft	1
67	T118093	Decal, OBD	1
68	T126170	Shift Console	1
69	717-1216	Button, Horn	1
70	12203-10	Tube, 3/8 Inch Black	1
71	12204-9	Tube, 1/2 Inch Black	1
72	12204-7	Tube, 1/2 Inch Black	1
73	T157159	Bracket, Relay Box	1
74	SHF-250C625-25	SCR, HHCS FT 0.25-20 X 0.625, STZ G5	6
75	WAN-25NX000-20	WSH, FL TYPA-NRW 0.25, ST Z	6

* ITEM NOT SHOWN IN ILLUSTRATION

WHEN ORDERING PARTS, SPECIFY MODEL NUMBER, SERIAL NUMBER AND DESCRIPTION OF PARTS REQUIRED

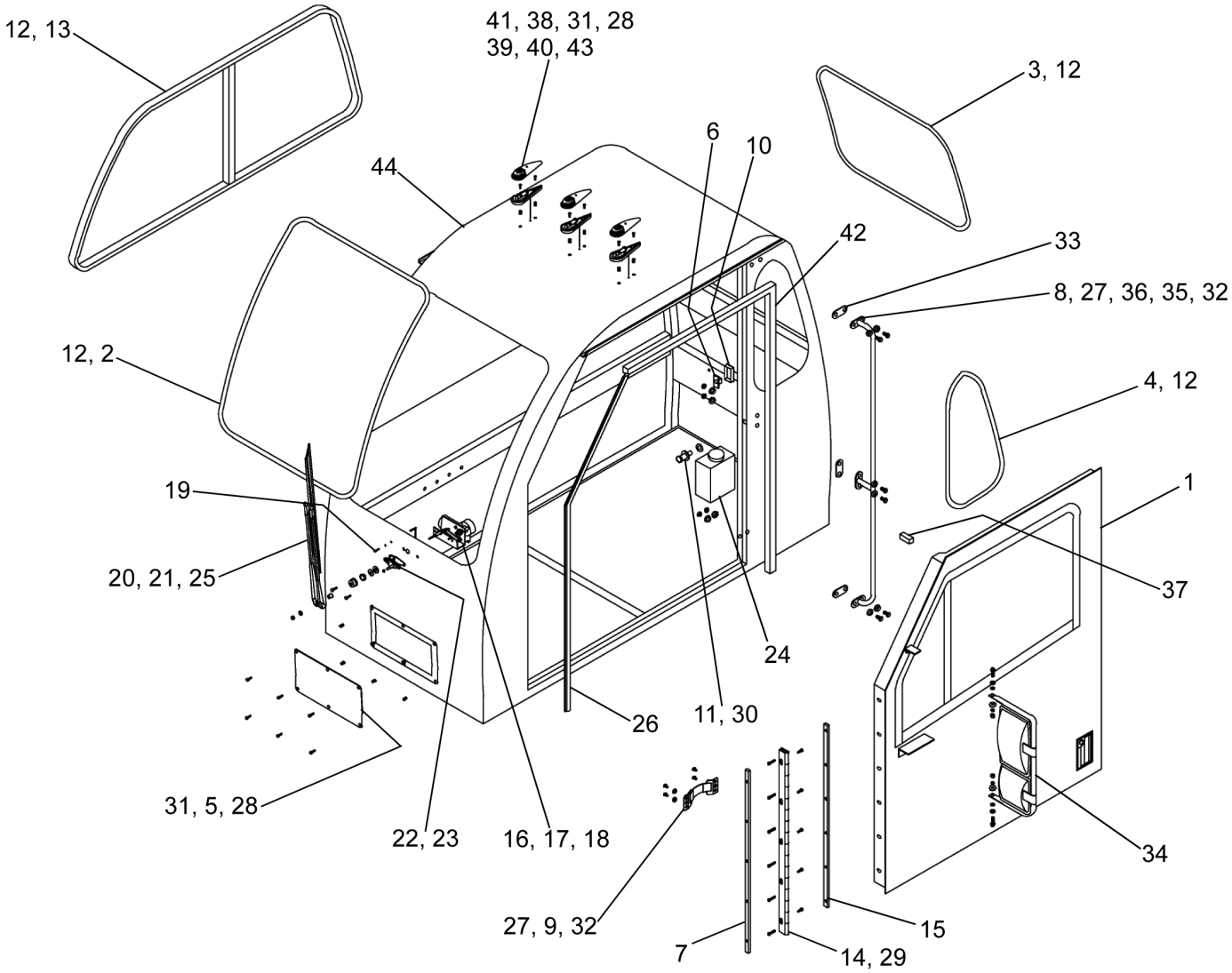

WHEN ORDERING PARTS, SPECIFY MODEL NUMBER, SERIAL NUMBER AND DESCRIPTION OF PARTS REQUIRED

LOAD KING BY CUSTOM TRUCK ONE SOURCE

CAB LOWER (EXPORT & DOMESTIC)

DATE: Released 08-2018

MODEL: 480-126

PAGE: 355

CHAPTER 2

REF	PART NO.	DESCRIPTION	QTY
	T150876 (Rev. A)	*Cab, Carrier, 2017*	
1	**220583**	Door Assembly (see page 357)	1
2	216484	Windshield	1
3	220584	Glass - Rear	1
4	216486	Glass - LH Rear	1
5	220575	Cover, Front Access	1
6	216488	Nut Plate	1
7	220576	Stud Bar - Cab	1
8	216490	Handle Weldment	1
9	219472	Door Restraint Strap	1
10	216464	Tube Plug	1
11	216372	Striker Bolt	1
12	215595	Windshield Seal - Large	34 FT
13	216493	Window - Sliding RH	1
14	220577	Hinge, Door	1
15	220579	Spacer Bar	1
16	216744	WJ 2-Speed Motor Kit W/Hardware (12V)	1
17	216864	Drive Arm, 62°	1
18	216886	Pivot Shaft, 1"	1
19	216865	Grommet - Wet Arm Tubing	1
20	216887	Arm, Pantograph Black, 22"	1
21	216940	Blade, Black Wide, 20" Flex	1
22	216740	Pantograph Kit, Black	1
23	216497	1/4-28 X 3/4" HX HD SS	2
24	216868	Reservoir Kit, Denso (12V)	1
25	216941	Wet Kit	1
26	216389	1/8" Grip x 0.750" DIA Bulb Seal	5 FT
27	215975	Screw, 5/16-18 X 3/4", HXFLG, YZ	10
28	216498	Screw, 10-32 X 1/2", PHPA, YZ	12
29	220578	Screw, 3/8-16 X 1.000" SOCCAPBTN, SS	11
30	220581	Washer, 3/8, Flat, YZC	1
31	216433	Insert, 10-32 AKS4-1032-13	12
32	215224	Washer, Lock, 5/16, YZ	8
33	216387	Gasket, Handle Pad	3
34	220580	Mirror Lefthand ASBY Stainless	1
35	215223	Washer, Flat, 5/16	6
36	215225	Nut, HEX, 5/16-18, Z	6
37	220582	NEOPRENE, 0.750 X 0.750",W/PSA	2"
38	216862	Wire Tie	4
39	216885	BUTT Splice 14 GA	1
40	220585	Three Way Connect, Heat Shrink, 14 GA	2
41	220586	Clearance Light	3
42	216480	Seal, Door, 1X.875D, BLK, PSA	5 FT
43	216857	Cable Clips	3
44	225256	Cab Weldment	1
45**	**T150876_Section1***	Cab, Carrier (Contd..) (see page 359)	REF
46**	**T150876_Section2***	Cab, Carrier (Contd..) (see page 361)	REF
47**	**T150876_Section3***	Cab, Carrier (Contd..) (see page 363)	REF

* NOT PURCHASABLE AT THIS LEVEL
** ITEM NOT SHOWN IN ILLUSTRATION

WHEN ORDERING PARTS, SPECIFY MODEL NUMBER, SERIAL NUMBER AND DESCRIPTION OF PARTS REQUIRED

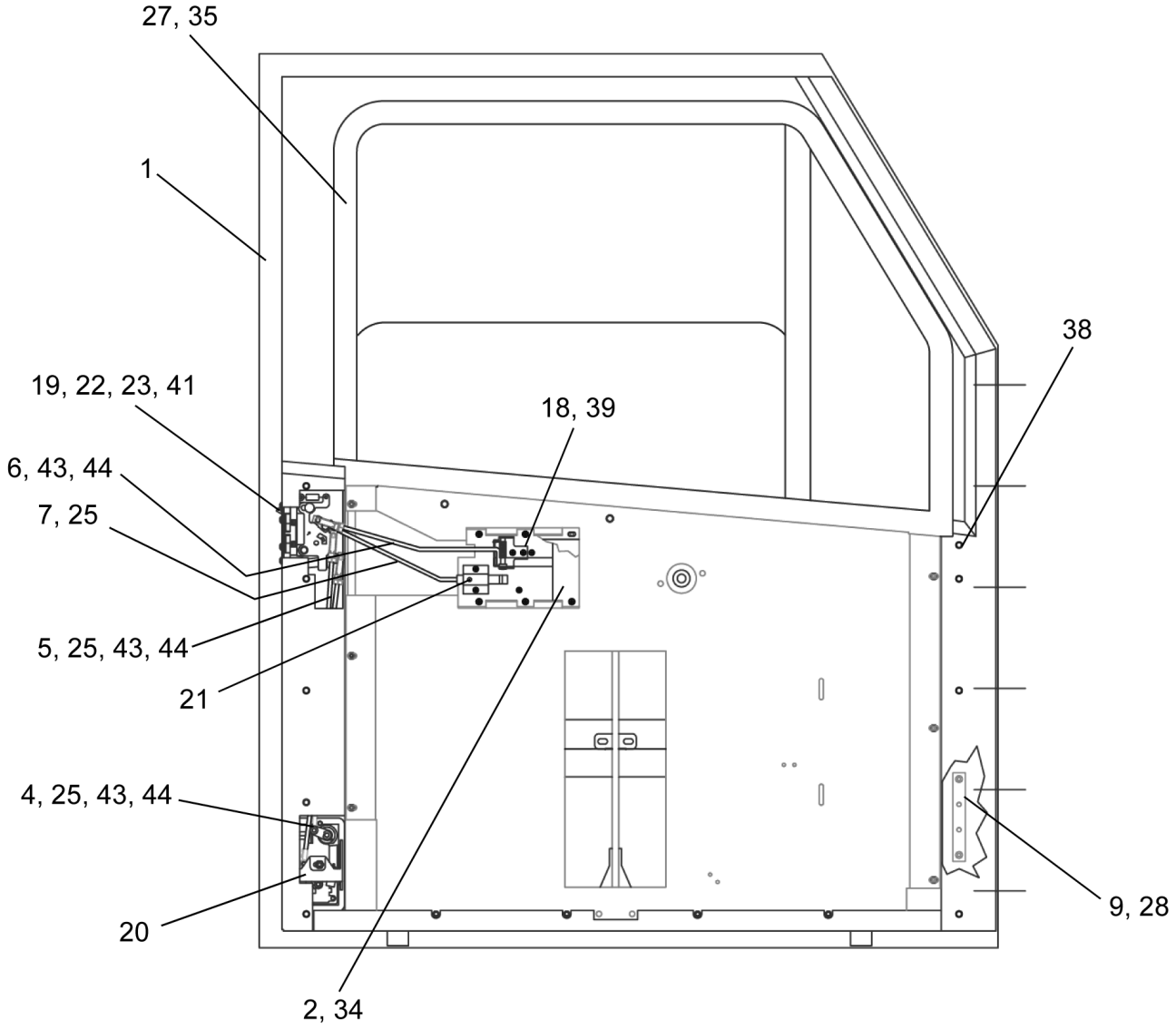
27, 35
1
19, 22, 23, 41
6, 43, 44
7, 25
5, 25, 43, 44
21
4, 25, 43, 44
20
2, 34
18, 39
38
9, 28

REF	PART NO.	DESCRIPTION	QTY
	220583 (Rev. 00)	*Door Assembly*	
1	225600	Door Weldment	1
2	216450	BRKT - Release Package	1
3*	216451	BEZEL	1
4	216452	Rod - Door, EXT. HNDL/Latch	1
5	216453	Rod - Door, EXT. KEY/Latch Lock	1
6	216454	Rod - Door, INT. HNDL/Latch	1
7	225601	Rod - Door, INT. Lock/Latch	1
8*	225602	Stud Bar - Door	1
9	216457	Bar- Door Restraint Strap	1
10*	216458	Panel - Door	1
11*	216459	BRKT - Mirror MNT Upper	1
12*	216460	BRKT - Mirror MNT Lower	1
13*	225603	Decal	1
14*	216461	Washer, CNTRSNK, #10, NYL	13
15*	216462	Screw, 10-32 X 3/4, PHOV, YZ	13
16*	216463	Sheet - Decal MNT, VINYL W/PSA	1
17*	216464	Tube Plug	1
18	215238	Screw, 8-32 X 1/2", PHFL, YZ	6
19	216465	Screw,1/4-20 X 1-1/4, HX, Z	6
20	216466	Paddle Handle CH-751	1
21	216467	I/S Release Package	1
22	216468	2 Rotor Latch	1
23	216469	Linkage Assembly	1
24*	216470	Spacer - Door Handle	2
25	215087	RH Rod Clip (7/32) Rod	3
26*	216471	Grab Handle	1
27	216472	Regulated Window Assembly	1
28	216473	Screw, 1/4-20 X 1/2, SOCFIT, SS	2
29*	216474	Screw, 1/4-28 X 1, SOCFIT, SS	1
30*	215215	Screw, 1/4-20 X 3/4", PHPA, YZ	5
31*	216475	Handle W/VINYL Knob	1
32*	216476	Escutcheon	1
33*	216477	Spring - Escutcheon	1
34	216434	Screw, 10-32 X 1/2, PHIL HD, Z	6
35	216479	Screw, S/M,#8 X 1, PHPA, Z	5
36*	216480	Seal, Door, 1X.875D, BLK, PSA	3.5FT
37*	216395	Insert, 1/4-20 AKS4-420-165	5
38	216433	Insert, 10-32 AKS4-1032-13	9
39	216427	Insert, 8-32 AKXX-832-080	6
40*	216481	Cover - Door Panel, VINYL	1
41	216482	Washer, Lock, 1/4", INT Tooth, Z	4
42*	216483	Screw, 8-32 X 3/4, PHPA, YZ	2
43	216436	Link Pin and Clip	3
44	216437	Shackle	3
45*	225604	Decal	1
46*	225605	Decal	1

* ITEM NOT SHOWN IN ILLUSTRATION

WHEN ORDERING PARTS, SPECIFY MODEL NUMBER, SERIAL NUMBER AND DESCRIPTION OF PARTS REQUIRED

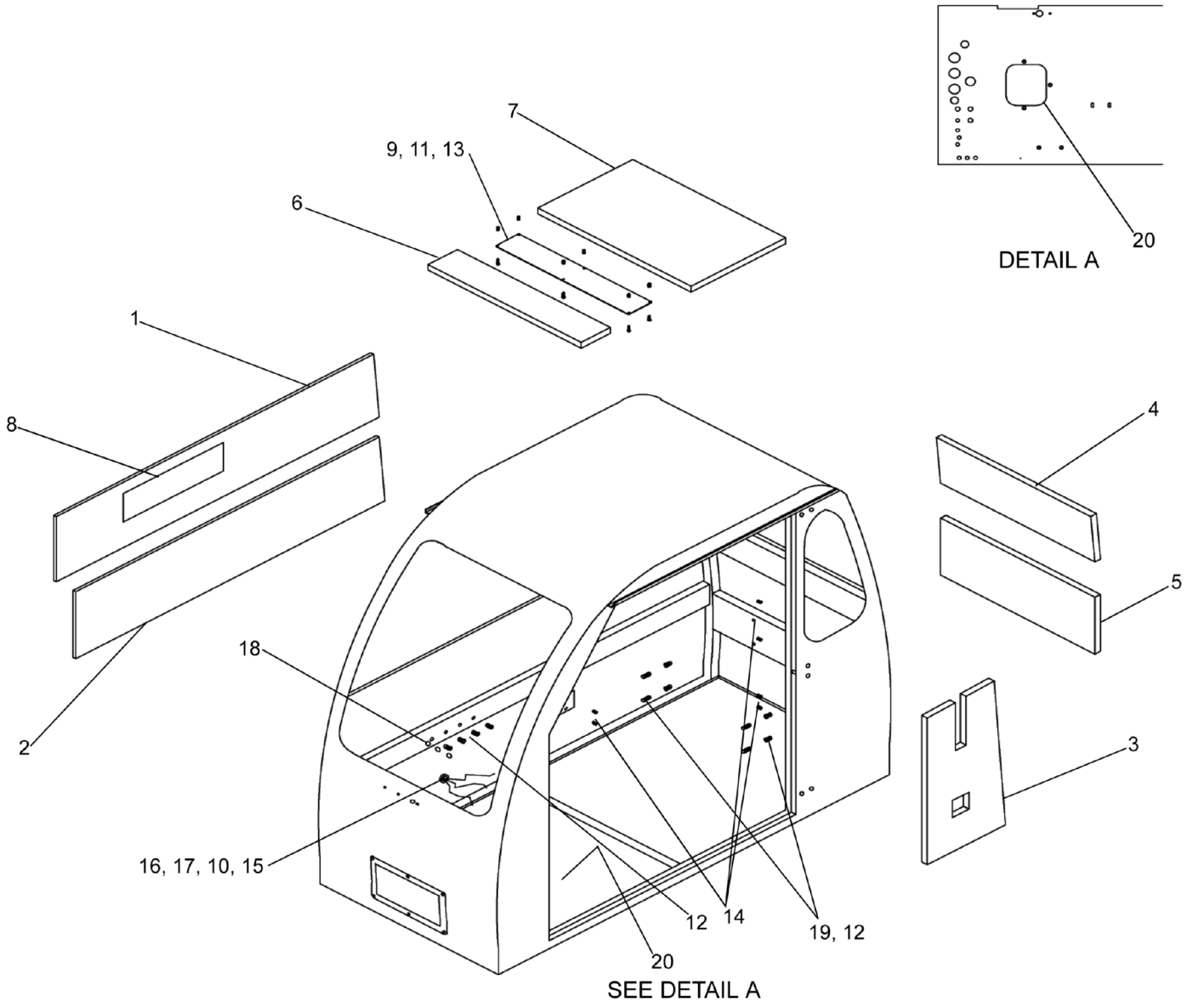

WHEN ORDERING PARTS, SPECIFY MODEL NUMBER, SERIAL NUMBER AND DESCRIPTION OF PARTS REQUIRED

REF	PART NO.	DESCRIPTION	QTY
	T150876_Section1* (Rev. A)	*Cab, Carrier (Contd..)*	
1	216499	Foam - RH, Upper	1
2	216500	Foam - RH, Lower	1
3	216501	Foam - LH, Lower	1
4	216502	Foam - Rear, Upper	1
5	216503	Foam - Rear, Lower	1
6	216504	Foam - Roof, Front	1
7	216505	Foam - Roof, Rear	1
8	216506	Vinyl - Decal	1
9	216507	Access Cover - Roof	1
10	216508	3/4" Grommet	1
11	216498	Screw, 10-32 X 1/2", PHPA, YZ	6
12	216510	Insert, 5/16-18 AKS-518-15	8
13	216433	Insert, 10-32 AKS4-1032-13	6
14	216911	Insert, 10-24 AKS4-1024-13	6
15	215204	Wire, 14 GA, Red, SXL	10FT
16	215209	Wire, 14 GA, Yellow, SXL	10FT
17	215206	Wire, 14 GA, Green, SXL	8FT
18	216511	Plug, 1/2", Button, Nylon, BLK	3
19	216512	Stud, 5/16-18 X 1-1/2", Z	4
20	220587	Insert, 5/16-18, 2ND Grip, AKS4-518-312	5

* NOT PURCHASABLE AT THIS LEVEL

WHEN ORDERING PARTS, SPECIFY MODEL NUMBER, SERIAL NUMBER AND DESCRIPTION OF PARTS REQUIRED

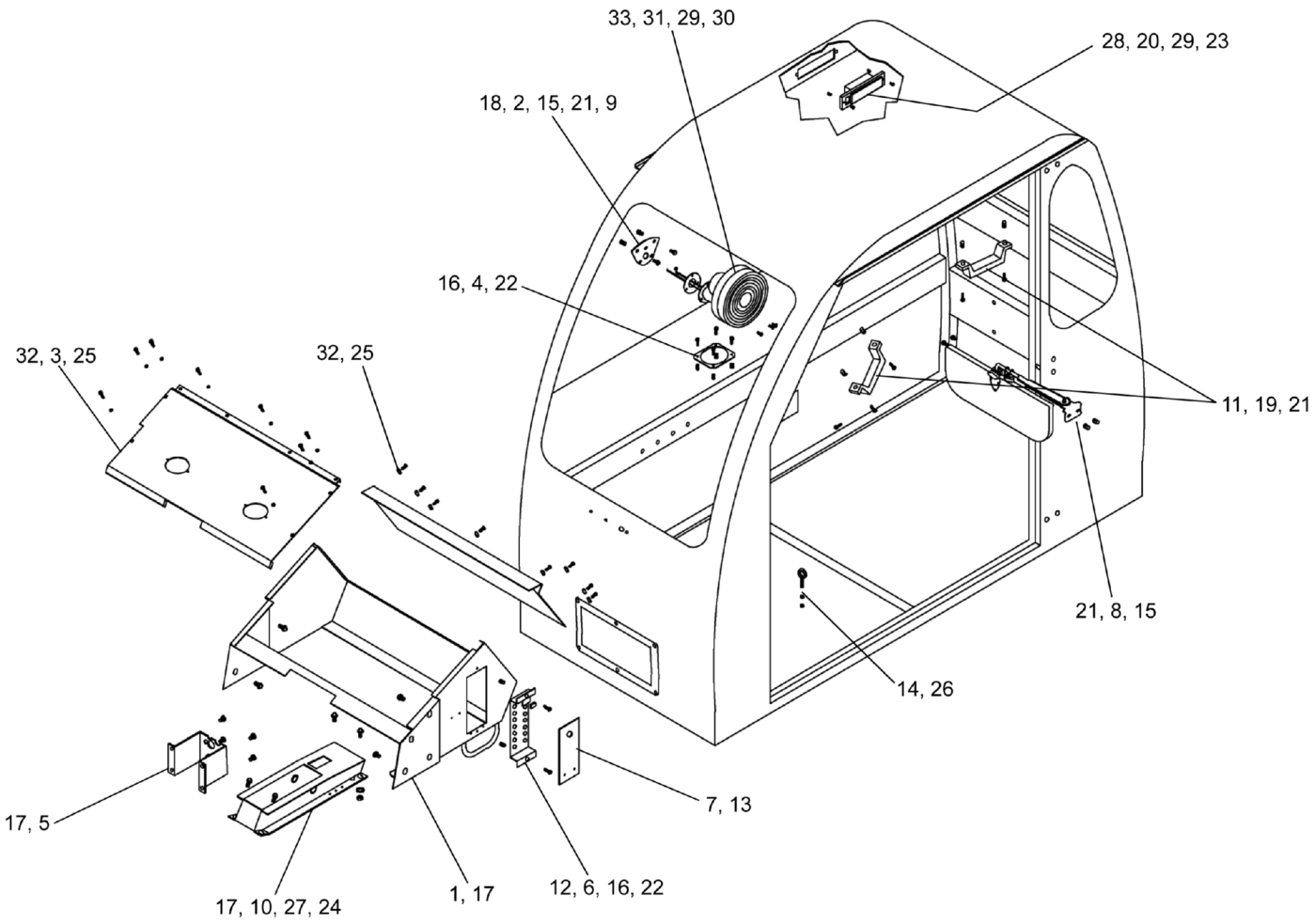
33, 31, 29, 30
28, 20, 29, 23
18, 2, 15, 21, 9
16, 4, 22
32, 3, 25
32, 25
11, 19, 21
21, 8, 15
14, 26
7, 13
17, 5
17, 10, 27, 24
1, 17
12, 6, 16, 22

REF	PART NO.	DESCRIPTION	QTY
	T150876_Section2* (Rev. A)	*Cab, Carrier (Contd..)*	
1	216513	Dash Weldment	1
2	220591	Bullet Receptacle 16-14 GA	1
3	216514	Panel Assembly, Vent Forward	1
4	216515	Plate - Boot	1
5	216516	Bracket, Air Brake Cylinder	1
6	216517	Breaker Panel Assembly	1
7	216518	Cover, Breaker Panel	1
8	216992	Sun Visor	1
9	216520	Bracket, Fan	1
10	216521	Pedal Support	1
11	215603	Grab Handle	2
12	216522	Snap-In Magnetic Catch	1
13	216523	Striker	1
14	216524	Eyebolt, 10-24 X 1-1/4", W/Nut	1
15	215234	Screw, 1/4-20 X 3/4", HXFLG, YZ	4
16	216498	Screw, 10-32 X 1/2", PHPA, YZ	6
17	215975	Screw, 5/16-18 X 3/4", HXFLG, YZ	16
18	220590	Bullet Connector 16-14 GA	1
19	215215	Screw, 1/4-20 X 3/4", PHPA, YZ	4
20	215238	Screw, 8-32 X 1/2", PHFL, YZ	2
21	216395	Insert, 1/4-20 AKS4-420-165	8
22	216433	Insert, 10-32 AKS4-1032-13	6
23	216427	Insert, 8-32 AKXX-832-080	2
24	215224	Washer, Lock, 5/16, YZ	2
25	216909	Washer, Flat, #8, Black Zinc	16
26	216509	Nut, HEX, 10-24, Z	1
27	215225	Nut, HEX, 5/16-18, Z	2
28	215615	Courtesy Lamp Assembly	1
29	220592	Butt Splice	2
30	216943	Eye Terminal	1
31	220593	Personal Fan	1
32	220589	Screw, #10-32 X 1/2, PHPA, Black Zinc	16
33	220594	Screw, #10-32 X 3/4", PHPA, Zinc	3

* NOT PURCHASABLE AT THIS LEVEL

WHEN ORDERING PARTS, SPECIFY MODEL NUMBER, SERIAL NUMBER AND DESCRIPTION OF PARTS REQUIRED

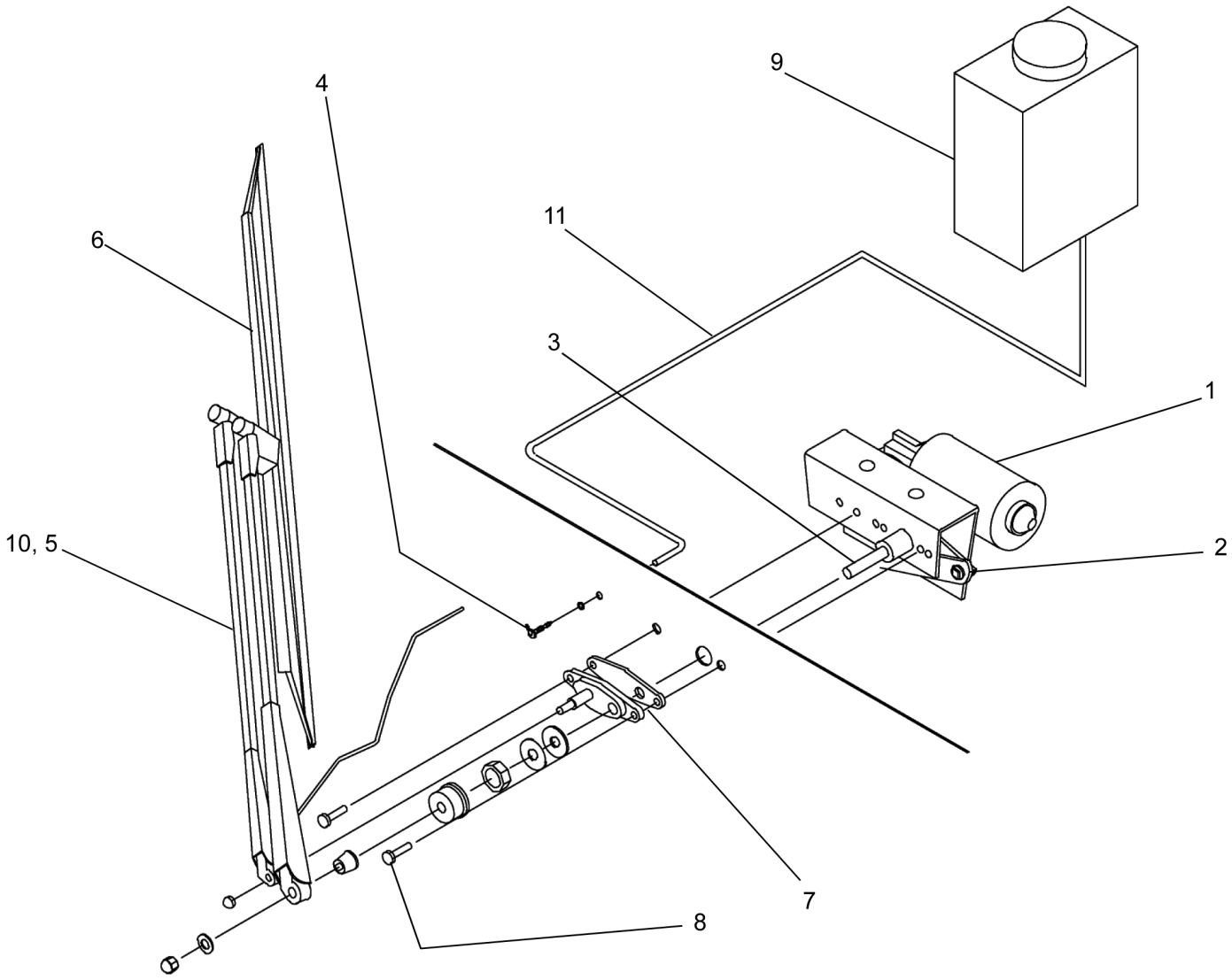

WHEN ORDERING PARTS, SPECIFY MODEL NUMBER, SERIAL NUMBER AND DESCRIPTION OF PARTS REQUIRED

REF	PART NO.	DESCRIPTION	QTY
	T150876_Section3* (Rev. A)	*Cab, Carrier (Contd..)*	
1	216744	WJ 2-Speed Motor Kit W/Hardware (12V)	1
2	216864	Drive Arm, 62°	1
3	216886	Pivot Shaft, 1"	1
4	216865	Grommet - Wet Arm Tubing	1
5	216887	Arm, Pantograph Black, 22"	1
6	216940	Blade, Black Wide, 20" Flex	1
7	216740	Pantograph Kit, Black	1
8	216497	1/4-28 X 3/4" HX HD SS	2
9	216868	Reservoir Kit, Denso (12V)	1
10	216941	Wet Kit	1
11	216942	Hose, 5/32, Washer	11FT
12**	216943	Eye Terminal	1
13**	216857	Cable Clips	3
14**	216862	Wire Tie	3
15**	220596	Rivet, 1/8 DIA, Universal	3

* NOT PURCHASABLE AT THIS LEVEL
** ITEM NOT SHOWN IN ILLUSTRATION

WHEN ORDERING PARTS, SPECIFY MODEL NUMBER, SERIAL NUMBER AND DESCRIPTION OF PARTS REQUIRED

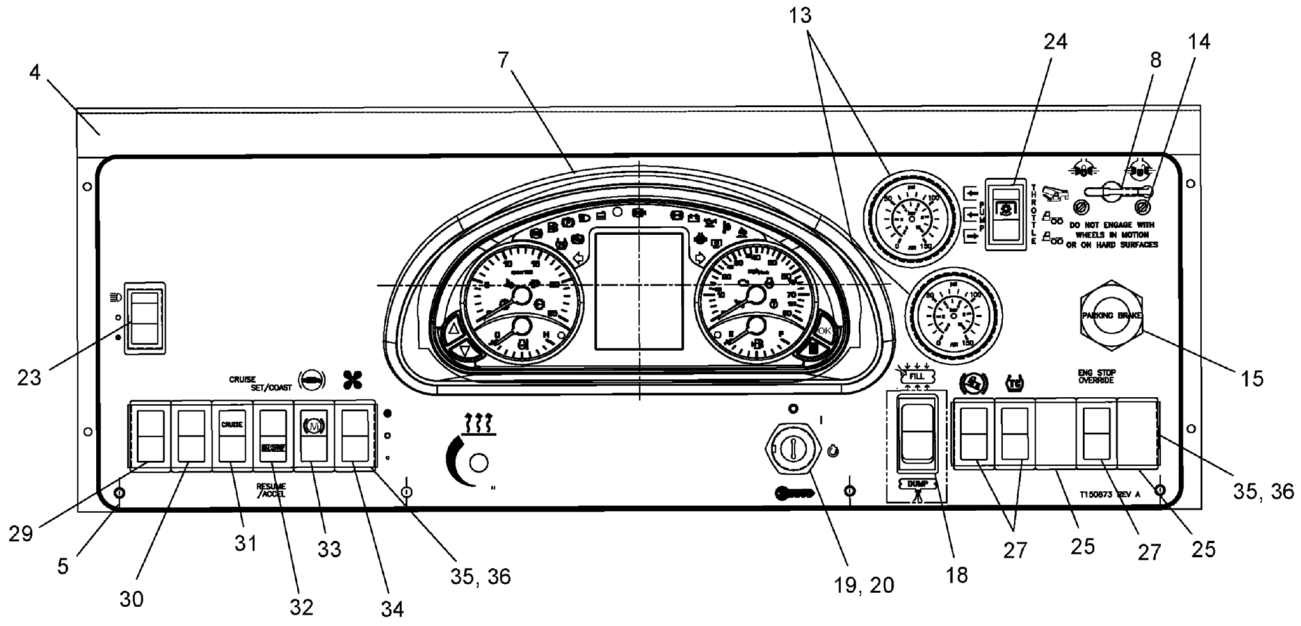

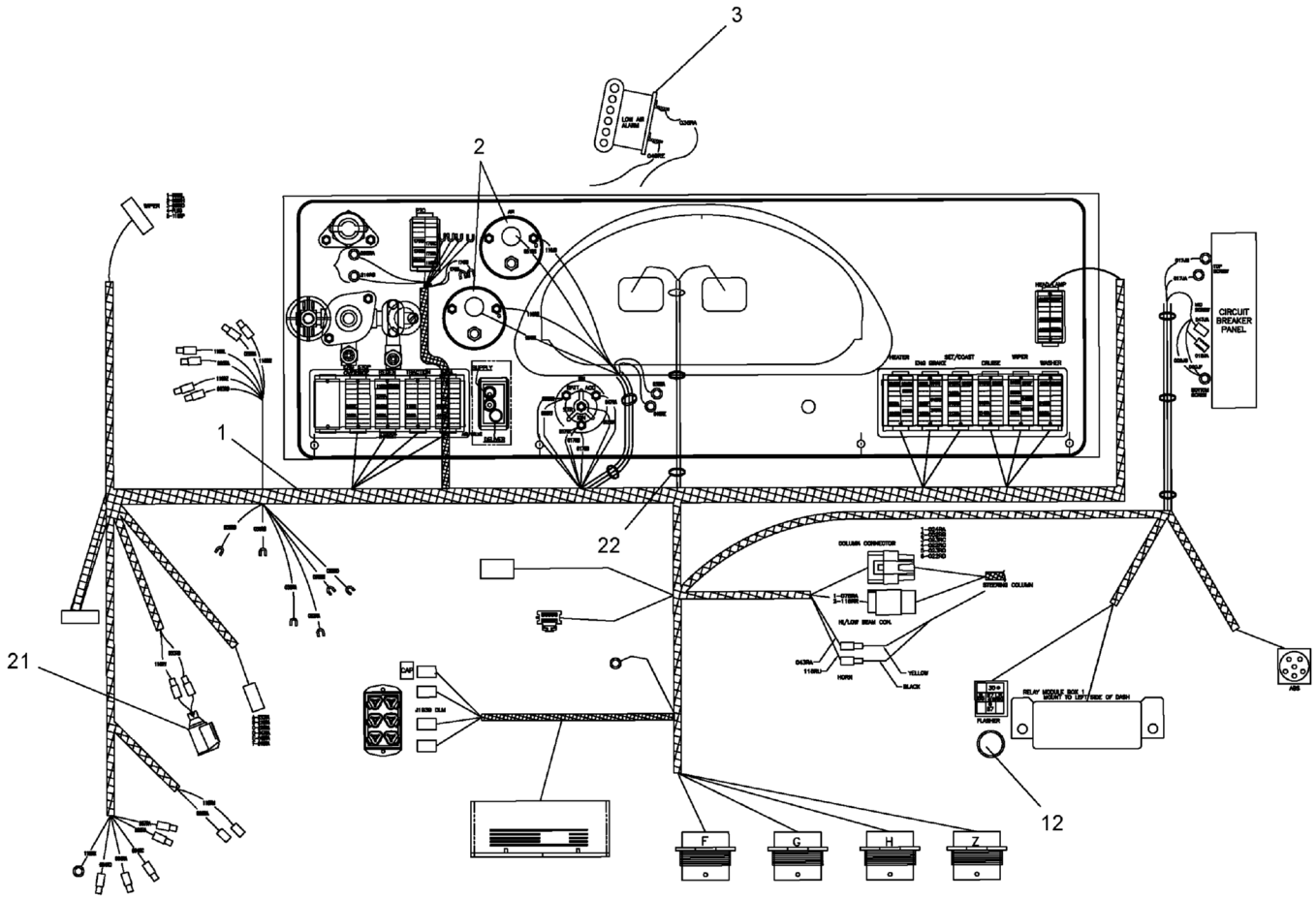

WHEN ORDERING PARTS, SPECIFY MODEL NUMBER, SERIAL NUMBER AND DESCRIPTION OF PARTS REQUIRED

LOAD KING BY CUSTOM TRUCK ONE SOURCE

LOWER DASH ASSEMBLY, OM460, 2017 (EXPORT)

DATE: Released 08-2018

MODEL: 480-126

PAGE: 365

CHAPTER 1

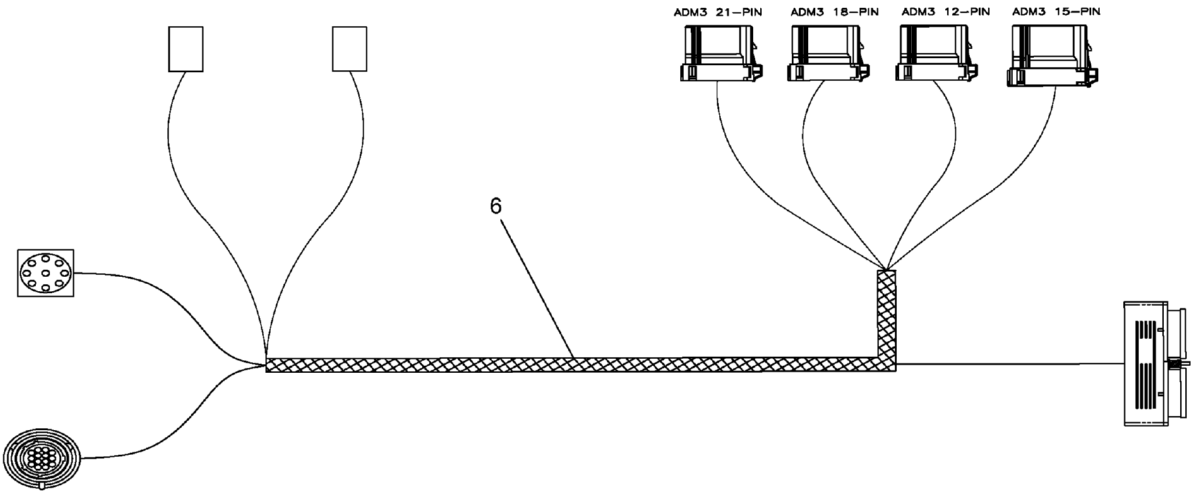

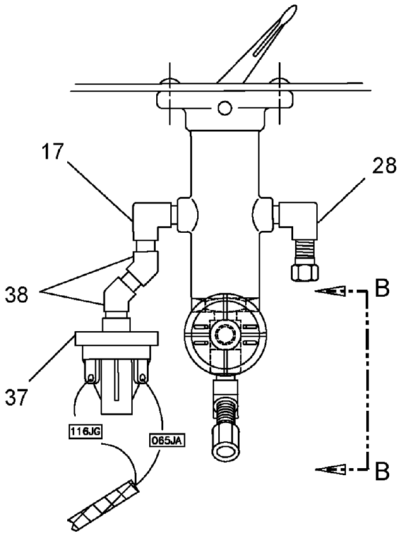

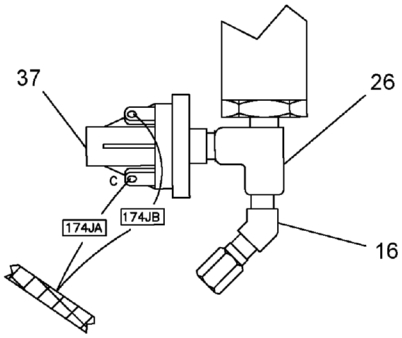

VIEW B - B

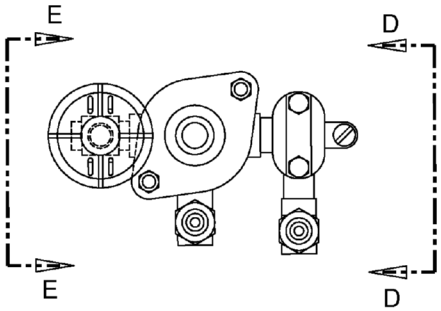

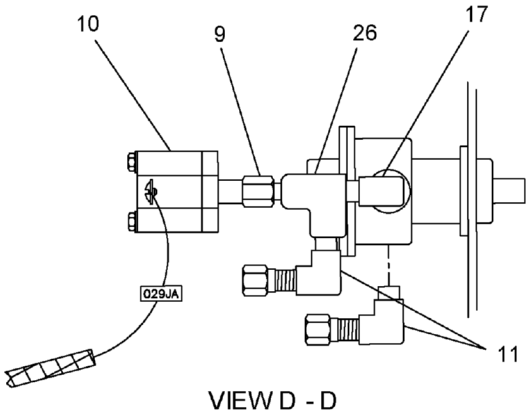

VIEW D - D

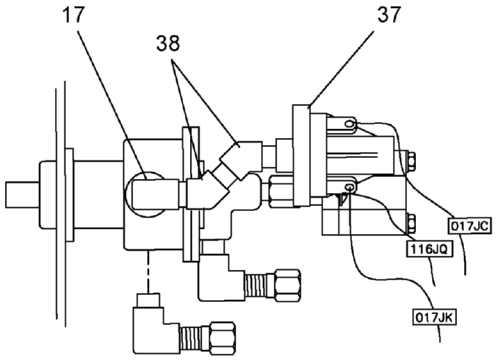

VIEW E - E

REF	PART NO.	DESCRIPTION	QTY
	T156049 (Rev. A)	*Lower Dash Assembly, OM460, 2017*	
1	T150384	Harness, Dash, 2017	1
2	1245-185	Kit, Light	2
3	1223-380	Buzzer, Low Air	1
4	T141437	Panel, Dash	1
5	T150873	Decal, Dash	1
6	T154160	Harness, Cab ECM, OM460, 2017	1
7	T148345	Gauge Cluster	1
8	12019-731	Air Switch	1
9	1219-52	Adapter	1
10	1223-1060	Switch, Pressure	1
11	T149767	Elbow, 90°, PTC-6-2	2
12	1223-779	Flasher	1
13	1245-184	Gauge, Air Pressure	2
14	SL4-160C500-20	SCR, SLT RND MS 10-24 X 0.500 STZ	2
15	12019-746	Valve, Parking	1
16	T150075	Elbow, 45°, PTC-6-2	1
17	1219-4	Adapter, 90°	3
18	717-0744	Air Valve	1
19	1223-858	Switch, Ignition (CH751)	1
20	1208-17	Bushing, Machinery	2
21	1223-921	Power Plug	1
22	1222-184	Plastic Tie	8
23	1223-1011	SW Head Light	1
24	1223-1035	SW Rocker PTO Auto	1
25	1223-1006	Plug	2
26	1219-55	T Fitting	2
27	1223-1081	SW Rocker MOM On/Off	3
28	T145513	Elbow, 90°, PTC-4-2	1
29	1223-1030	SW Rocker Washer	1
30	1223-1029	SW Rocker Wiper	1
31	1223-1033	SW Rocker Cruise On	1
32	1223-1034	SW Rocker Set Cruise	1
33	1223-1032	SW Rocker Engine Brake	1
34	1223-1031	SW Rocker Heater	1
35	1223-1004	Gang Mount Center	8
36	1223-1005	Gang Mount End	4
37	1223-547	Switch, Pressure	3
38	1219-59	Adapter, 45°	4
39*	**T156049_CB Panel**	Panel, Circuit Breaker (see page 368)	Ref

* ITEM NOT SHOWN IN ILLUSTRATION

WHEN ORDERING PARTS, SPECIFY MODEL NUMBER, SERIAL NUMBER AND DESCRIPTION OF PARTS REQUIRED

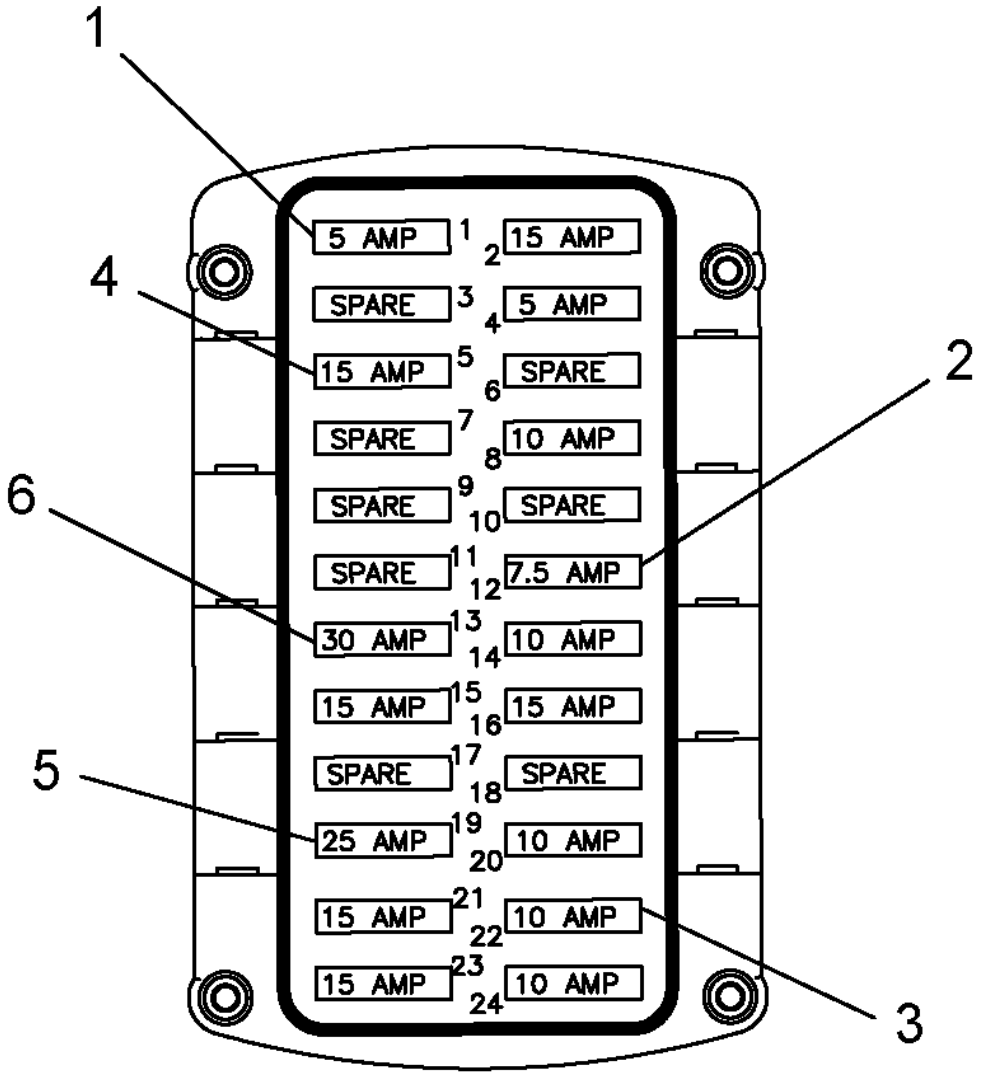

REF	PART NO.	DESCRIPTION	QTY
	T156049_CB Panel (Rev. 00)	*Panel, Circuit Breaker*	
1	219190	Fuse 5 AMP	2
2	220068	Circuit Breaker, 7.5 AMP	1
3	220069	Circuit Breaker, 10 AMP	5
4	220070	Circuit Breaker, 15 AMP	6
5	220071	Circuit Breaker, 25 AMP	1
6	227805	30 AMP Restable Breaker	1

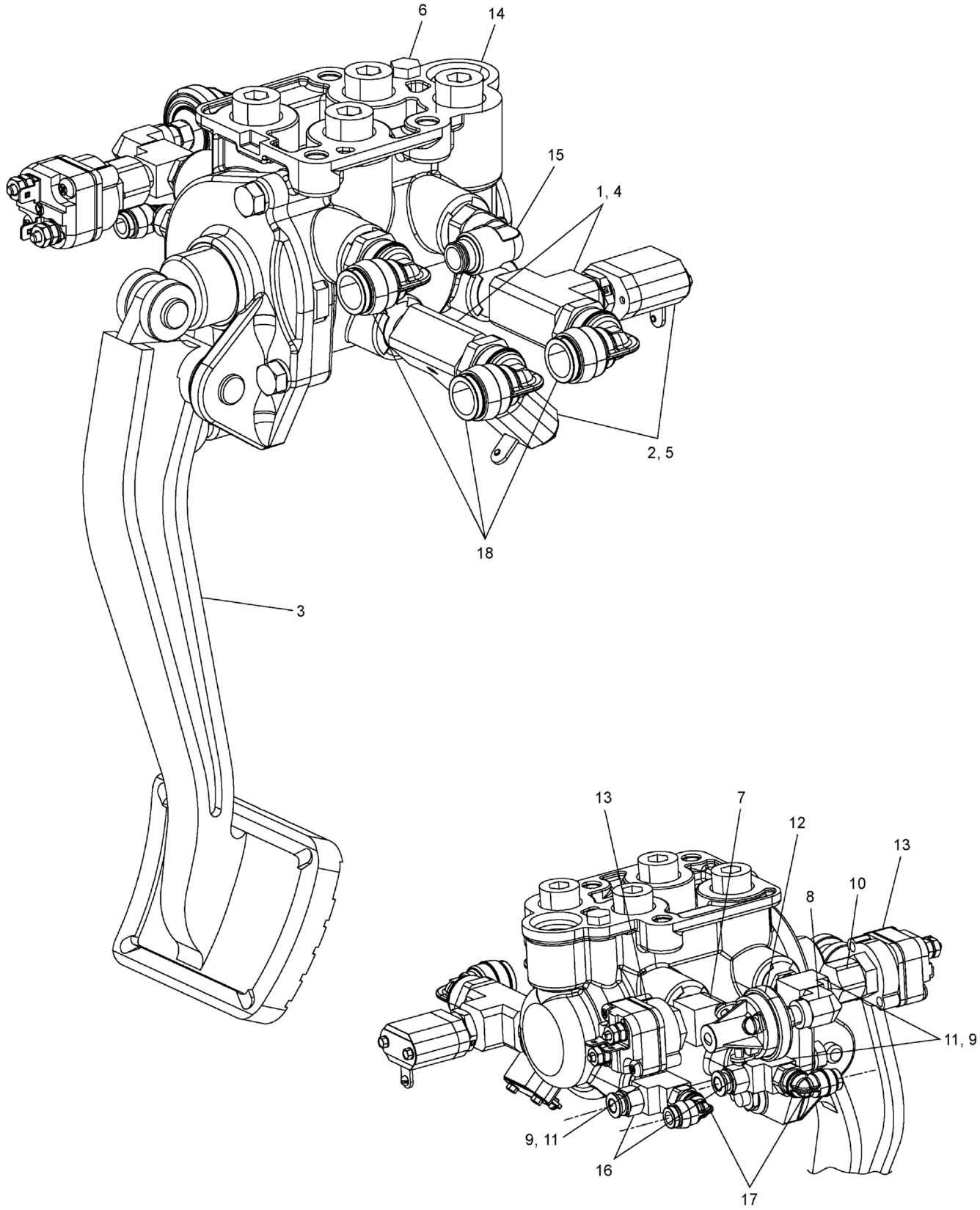

WHEN ORDERING PARTS, SPECIFY MODEL NUMBER, SERIAL NUMBER AND DESCRIPTION OF PARTS REQUIRED

REF	PART NO.	DESCRIPTION	QTY
	714A1481 (Rev. D)	*Brake Assembly*	
1	12019-315	Tee	2
2	12019-323	Switch-Bendix	2
3	12019-386	Valve, Treadle	1
4	1219-191	Nipple	2
5	1219-214	Adapter, MNPT-6/FNPT-4	2
6	1219-215	Plug, NPT-2, HEX	1
7	1219-29	Elbow, 90°, MNPTF-4/FNPTF-4	1
8	1219-4	Adapter, 90°	1
9	1219-43	Reducer	3
10	1219-52	Adapter	1
11	1219-55	T Fitting	3
12	1223-450	Switch Pressure	1
13	445-1074	Switch Stop Light	2
14	MK80048-05	Plug Hollow HEX	4
15	T118088	Elbow, 90°, PTC-6-6	1
16	T120964	Adapter, MNPT-2/PTC-4	2
17	T145513	Elbow, 90°, PTC-4-2	2
18	T145516	Elbow, 90°, PTC-8-6	3

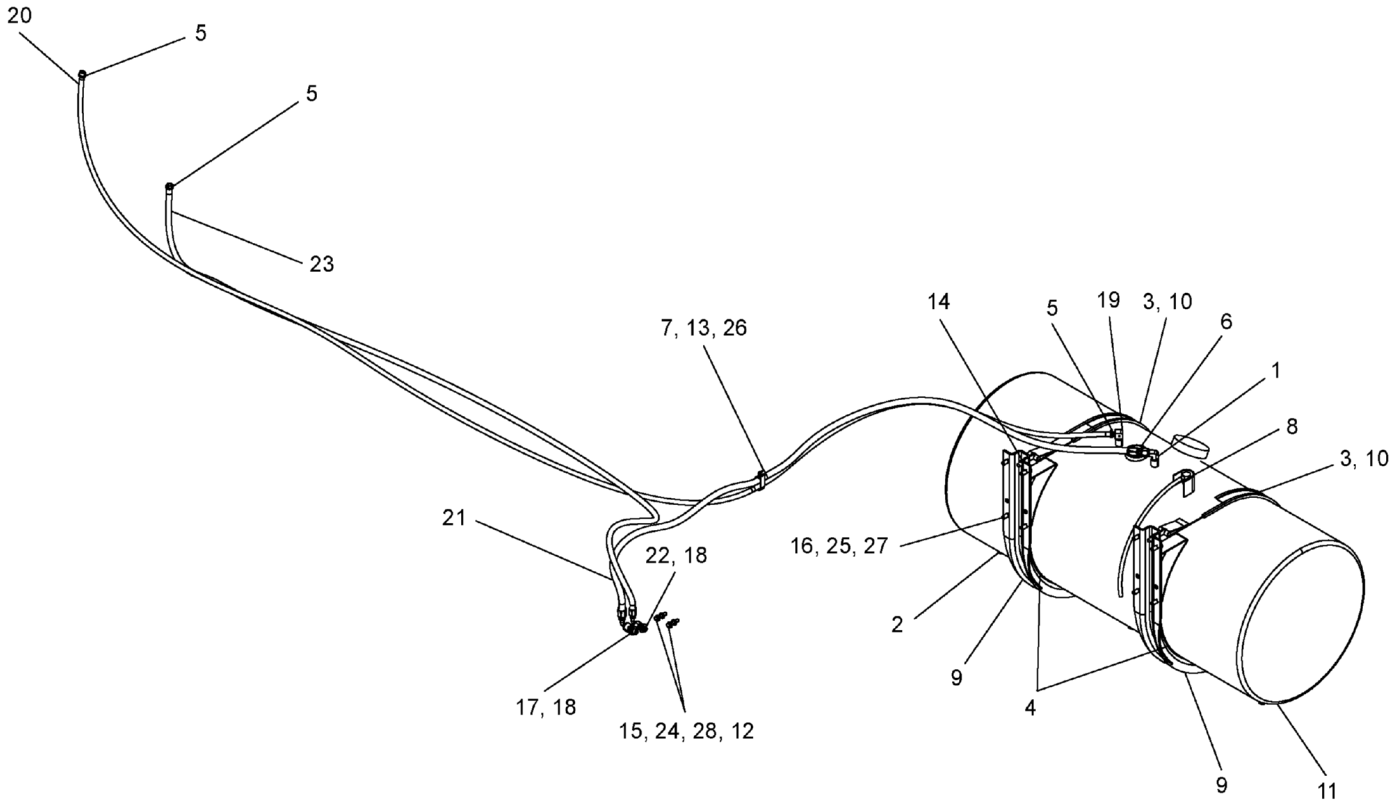

WHEN ORDERING PARTS, SPECIFY MODEL NUMBER, SERIAL NUMBER AND DESCRIPTION OF PARTS REQUIRED

REF	PART NO.	DESCRIPTION	QTY
	T132930 (Rev. D)	*Fuel GP-MB460 T5 T7*	
1	1219-464	Elbow, 90°, MNPTF-8/MJIC-10	1
2	1219-537	Plug, NPT-8, Socket	4
3	1221-152	1.75" Wide Rubber Insulator	76"
4	1221-153	1.5" Wide Adhesive Rubber INSULA	48"
5	1240-259	Clamp SZ 10, Stainless	3
6	1245-186	Sender	1
7	200B2007-58	Clamp-Medium Duty	1
8	435-1017-24	Hose ASSY	1
9	707-7018	Bracket, Fuel Tank	2
10	707-7018-1	Strap, Fuel Tank	2
11	717-0172	Fuel Tank, 100 GAL	1
12	N24-10CX000-28	Nut, HEX M10-1.5, DIN934, ST SQC C8.8	2
13	NTP-375C000-25	Nut, HEX TPLCK 0.375-16, ST Z GR5	1
14	NYL-500C000-25	Nut, Lock, .50C	4
15	S07-10CM040-28	SCR, HHCS M10-1.5 X 40 PT, ST SQC C8.8	2
16	SHF-500CA25-25	SCR, HHCS FT 0.50-13 X 1.25, ST Z G5	8
17	T119829	Adapter, -10, M16	1
18	T119830	Washer, Bonded Sealing, M16	2
19	T143398	Elbow, 90, MNPT-8/HBRB-6	1
20	T143414	Hose, -6, 150	1
21	T143415	Hose,-10, 1000, FJIC-10SW/FJIC-10SW90	1
22	T143970	Adapter, MJIC-8/M16 X 1.5	1
23	T145254	Hose, -8, 1250, FJIC-8SW90	1
24	W07-438X000-20	WSH, LCK MED SPLT 0.4375, ST Z	2
25	W07-500X000-20	WSH, LCK, MED SPLT 0.50, ST SQC	8
26	WAW-37WX000-20	WSH, FL TYPA-WID 0.375, ST Z	1
27	WAW-50WX000-20	WSH, FL TYPA-WID 0.50, ST SQC	8
28	WMH-010X000-20	WSH, Flat, Hard M10 D125, ST SQC	2

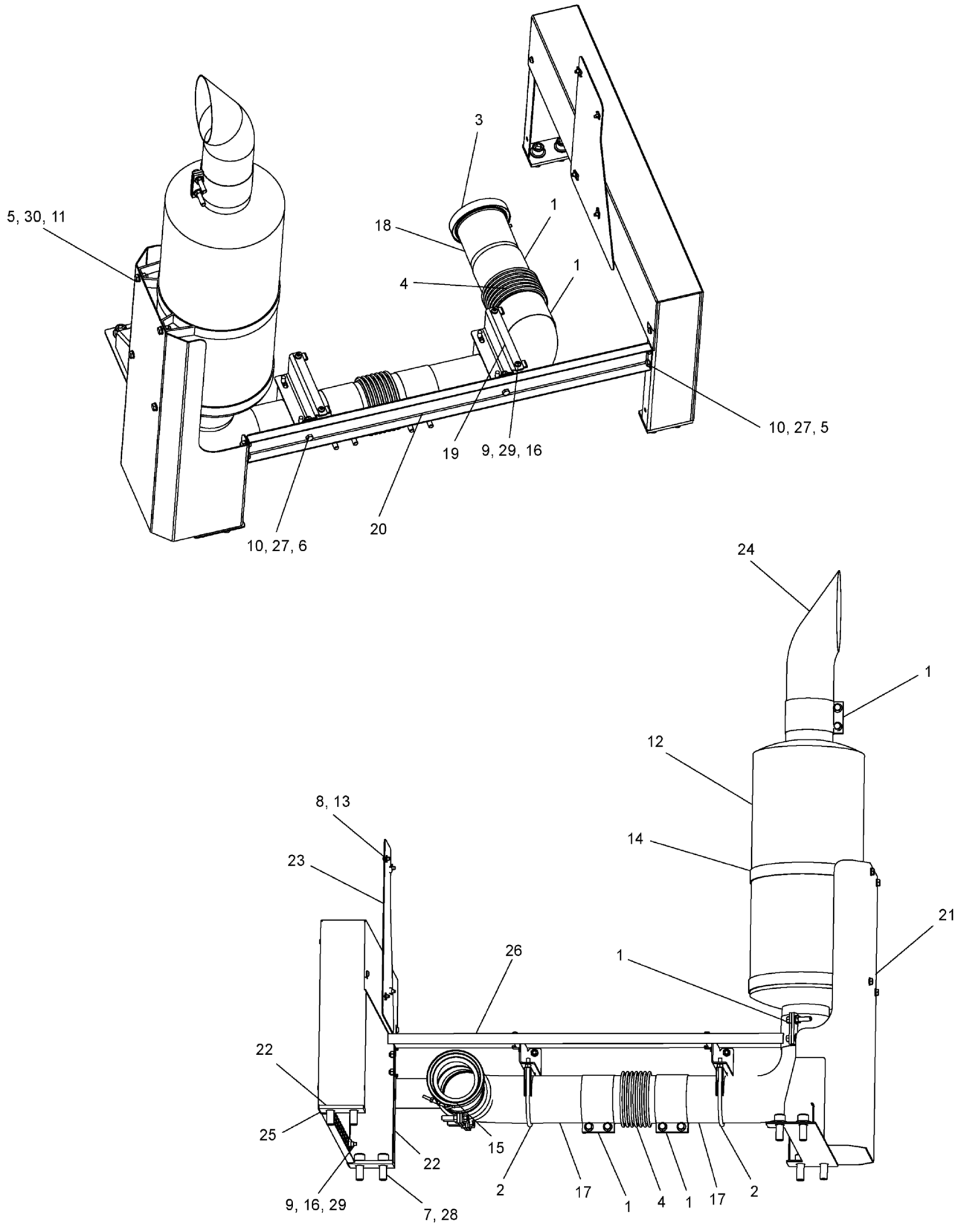

WHEN ORDERING PARTS, SPECIFY MODEL NUMBER, SERIAL NUMBER AND DESCRIPTION OF PARTS REQUIRED

LOAD KING BY CUSTOM TRUCK ONE SOURCE

EXHAUST ASSEMBLY GP-460

DATE: Released 08-2018

MODEL: 480-126

PAGE: 373

CHAPTER 2

REF	PART NO.	DESCRIPTION	QTY
	T133324 (Rev. C)	*Exhaust Assembly, GP-460*	
1	1240-122	Clamp, Seal 5.00	6
2	1240-247	Clamp, Exhaust 5.00 DIA	2
3	1240-290	Clamp, V-Band 5.88ID	1
4	1256-79	5" Exhaust Bellows	2
5	N24-10CX000-28	Nut, HEX M10-1.5, DIN934, ST SQC C8.8	8
6	NYM-10CM000-41	Nut, NYL-INS M10-1.5, STZ C8	4
7	S14-750CB00-H2	SCR, SHCS 0.75-10 X 2.00, ST SQC	8
8	S46-06AM016-28	BHSHCS, M6-1.0 X 16	4
9	S46-08BM020-28	BHSHCS, M8-1.25 X 20 ST SQC C8.8	10
10	SMF-10CM020-28	SCR, HHCS M10-1.5 X 20 FT, ST Z 8.8	8
11	SMF-10CM025-28	SCR, HHCS M10-1.5 X 25 FT, ST Z 8.8	4
12	T107631	Muffler	1
13	T112319	Nut, Clip-On, M6-1	4
14	T113494	Clamp, Band	2
15	T115968	Gasket Assembly, 4"	1
16	T122330	Nut, Clip-On, M8-1.25	10
17	T133626	Tube, Exhaust	2
18	T133627	Tube, Exhaust	1
19	T133641	Plate	2
20	T134129	Bracket, Exhaust	1
21	T136100	Mount, Muffler	1
22	T136909	Bracket Weld	2
23	T136912	Plate	1
24	T137092	Tube, Exhaust	1
25	T137399	Cover, Side	1
26	T138066	Cover	1
27	W16-010X000-GP	WSH, Lock, SPLT M10 D127B, STL	8
28	WAH-75NX000-20	WSH, FL HRD A-NRW 0.75, ST SQC	8
29	WMF-80MX000-20	WSH, Flat M8 DIN125, ST Z	10
30	WMH-010X000-20	WSH, Flat, Hard M10 D125, ST SQC	8

REF	PART NO.	DESCRIPTION	QTY
	T148362 (Rev. A)	*Engine, T 7-2017 USA*	
1	T150379	Hraness, AC Adaptor, MTU, 2017	1
2	T148350	ECU, 12V, 500k, Premium	1
3	T150380	Harness, Aftertreatment, MTU, GHG17	1
4	12400-2019	Decal, Ultra Low Sulfur Diesel	1
5	T136582	Fluid & Lube, USA	1
6	**T153990**	Fuel ASSY, DD13, GHG17 (see page 376)	1
7	**T150049**	Aftertreatment Assembly (see page 378)	1
8	**T150050**	Air Intake ASSY-DD13 (see page 382)	1
9	**T150052**	Lower Cab Assembly, DD13 (see page 385)	1
10	**T148367**	Rear Suspension ASSY, T 700-2017 (see page 396)	1
11	**T148359**	T5/T7 Engine Installation DD13 GHG17 (see page 400)	1

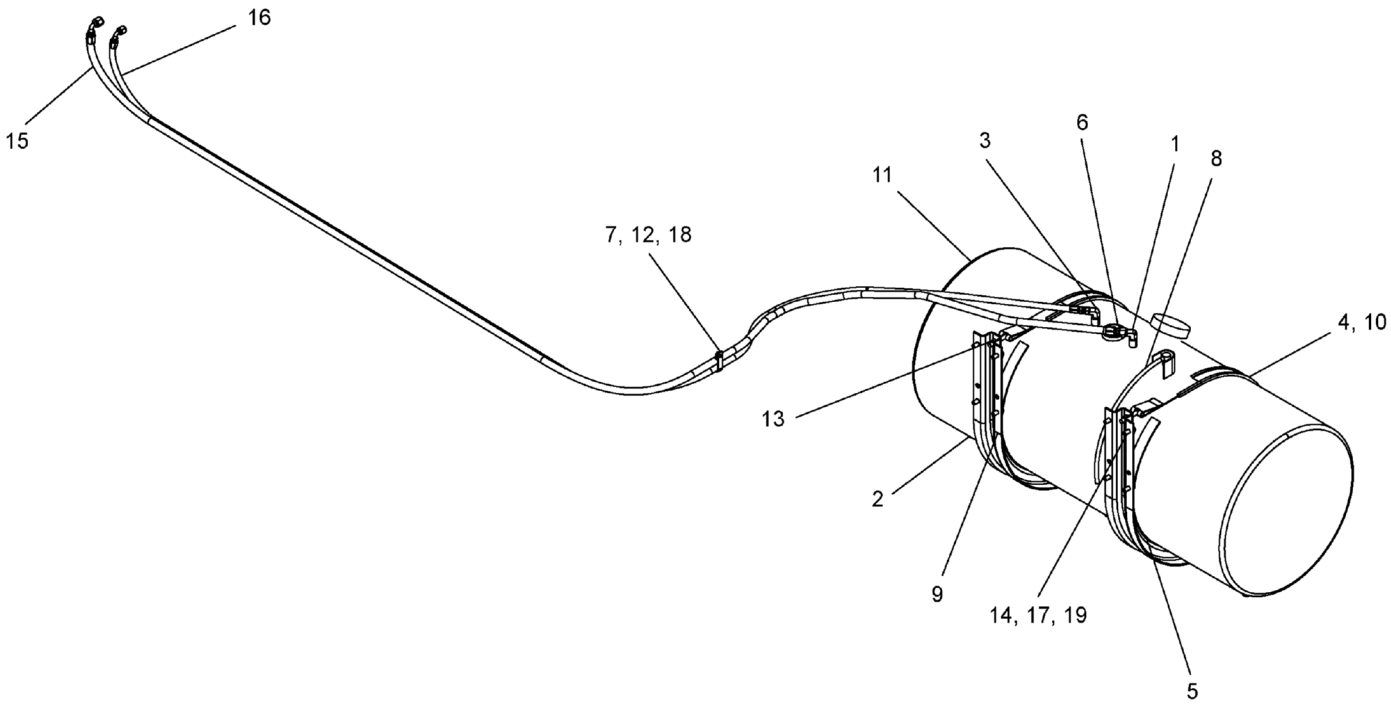
16
15
7, 12, 18
11
3
6
1
8
4, 10
13
2
9
14, 17, 19
5

REF	PART NO.	DESCRIPTION	QTY
	T153990 (Rev. A)	*Fuel ASSY, DD13, GHG17*	
1	1219-464	Elbow, 90°, MNPTF-8/MJIC-10	1
2	1219-537	Plug, NPT-8, Socket	4
3	1219-815	Elbow, 90, MJIC-8/MNPTF-8	1
4	1221-152	1.75" Wide Rubber Insulator	2
5	1221-153	1.5" Wide Adhesive Rubber INSULA	2
6	1245-186	Sender	1
7	200B2007-58	Clamp-Medium Duty	1
8	435-1017-24	Hose ASSY	1
9	707-7018	Bracket, Fuel Tank	2
10	707-7018-1	Strap, Fuel Tank	2
11	717-0172	Fuel Tank, 100 GAL	1
12	NTP-375C000-25	Nut, HEX TPLCK 0.375-16, ST Z GR5	1
13	NYL-500C000-25	Nut, Lock, .50C	4
14	SHF-500CA25-25	SCR, HHCS FT 0.50-13 X 1.25, ST Z G5	8
15	T156964	Hose, -8, 1250, FJIC-8SW/FSAE-8SW90	1
16	T156965	Hose, -10, 1000, FJIC-10SW/FSAE-10SW90	1
17	W07-500X000-20	WSH, LCK, MED SPLT 0.50, ST SQC	8
18	WAW-37WX000-20	WSH, FL TYPA-WID 0.375, ST Z	1
19	WAW-50WX000-20	WSH, FL TYPA-WID 0.50, ST SQC	8

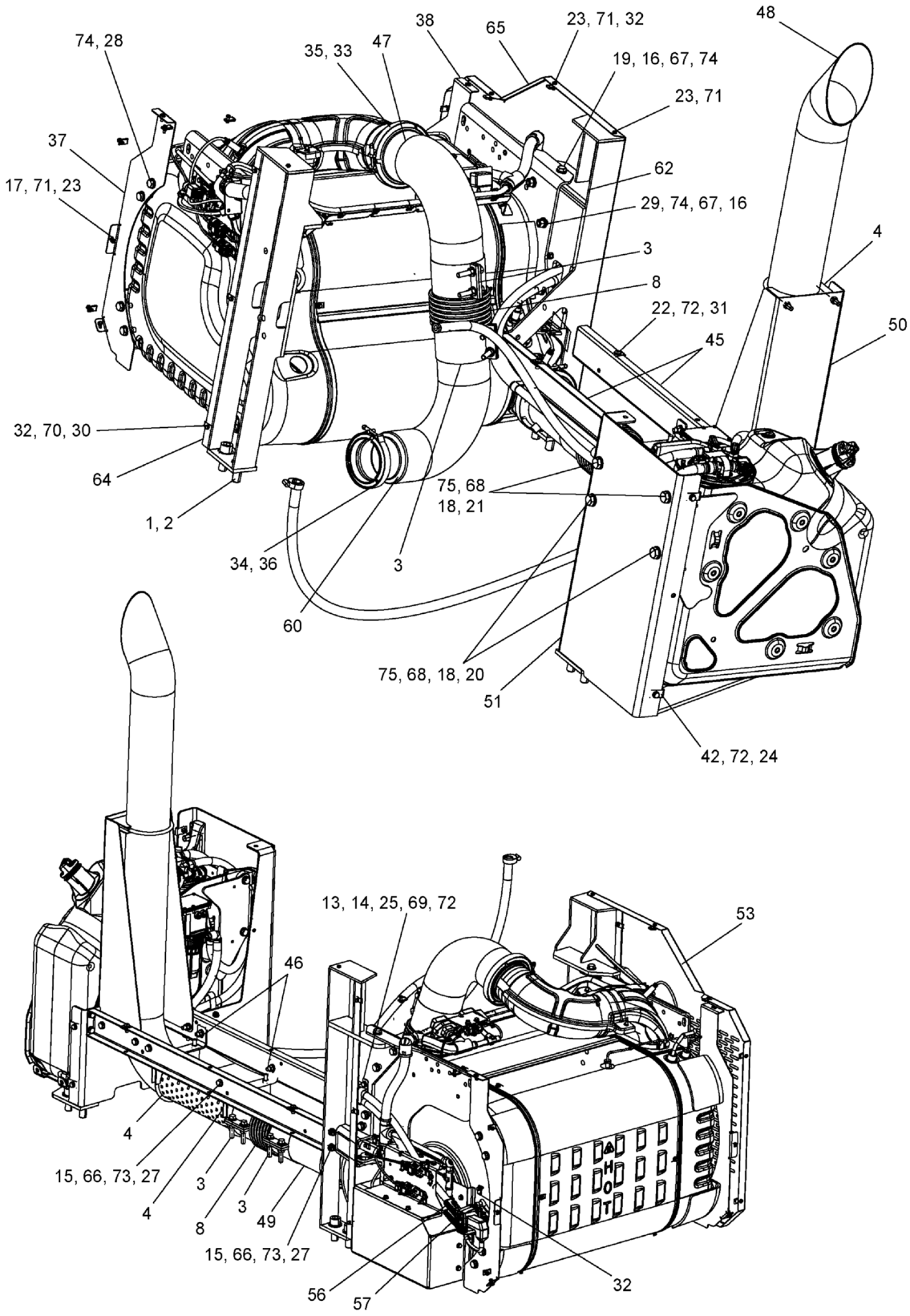

WHEN ORDERING PARTS, SPECIFY MODEL NUMBER, SERIAL NUMBER AND DESCRIPTION OF PARTS REQUIRED

LOAD KING BY CUSTOM TRUCK ONE SOURCE

AFTERTREATMENT ASSEMBLY

DATE: Released 08-2018

MODEL: 480-126

PAGE: 378

CHAPTER 2

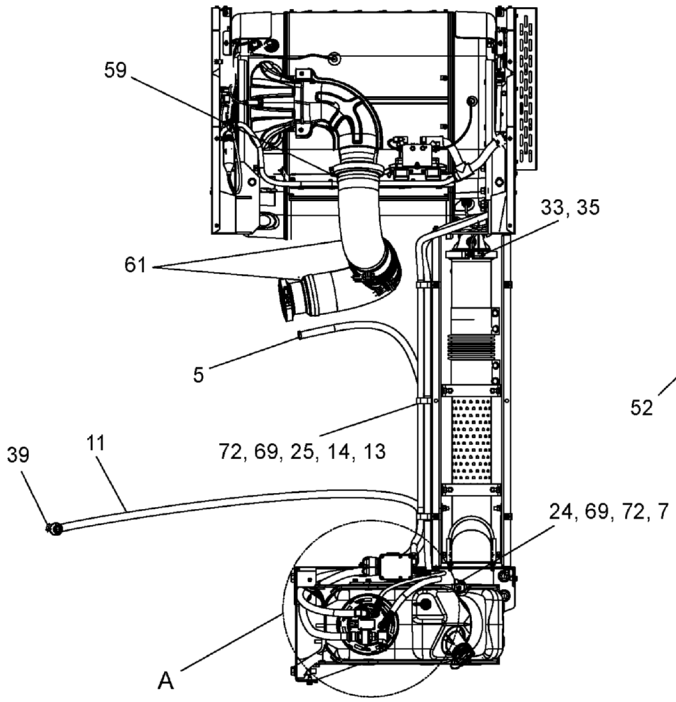

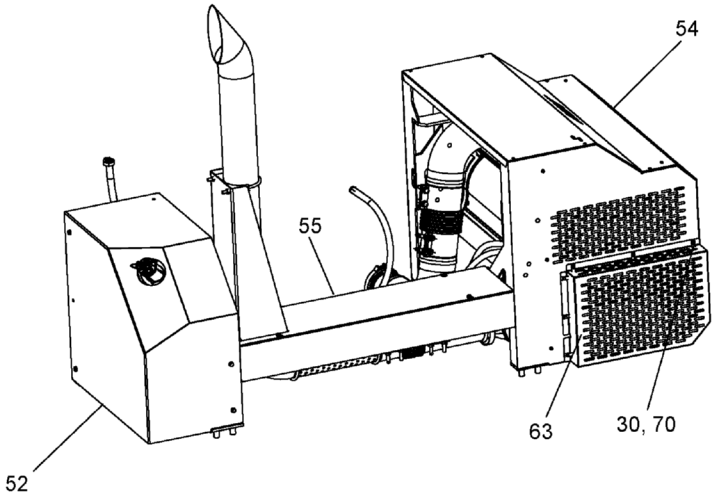

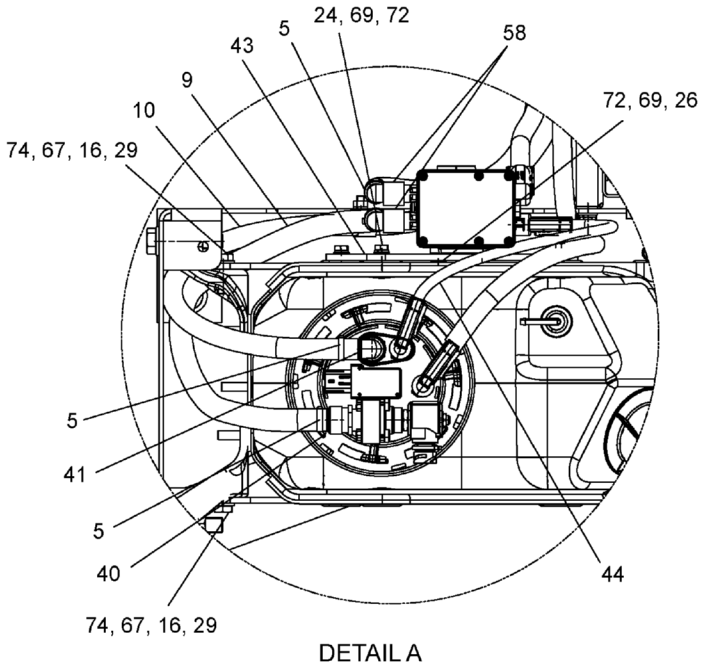

DETAIL A

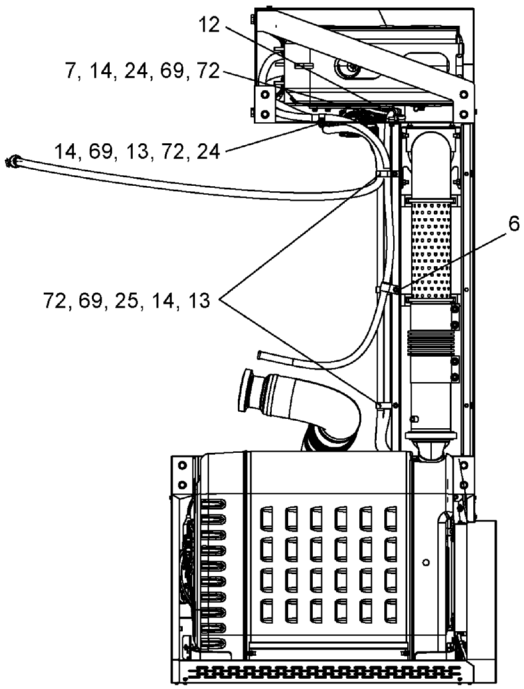

WHEN ORDERING PARTS, SPECIFY MODEL NUMBER, SERIAL NUMBER AND DESCRIPTION OF PARTS REQUIRED

REF	PART NO.	DESCRIPTION	QTY
	T150049 (Rev. A)	*Aftertreatment Assembly*	
1	1203-160	Capscrew, 0.75C X 2.00, GRD 5	8
2	1209-54	Washer, Flat, .75 Hard	8
3	1240-122	Clamp, Seal 5.00	4
4	1240-247	Clamp, Exhaust 5.00 DIA	3
5	1240-259	Clamp SZ 10, Stainless	5
6	1240-29	Clamp P, 1.125 DIA	1
7	1240-68	Clamp	2
8	1256-79	5" Exhaust Bellows	2
9	1276-31	Hose, -10, HTR, 5/8" ID	1
10	1276-80	Hose, 5/8" ID	1
11	1276-90	Hose, -10, HTR 5/8 ID	1
12	200B2007-35	Clamp, 0.75	1
13	200B2007-67	Clamp, Double, MED, 0.88 ID	6
14	N24-08BM000-28	Nut, HEX M8-1.25, DIN934, STZ CL	6
15	N24-10CX000-28	Nut, HEX M10-1.5, DIN934, ST SQC C8.8	16
16	N24-12DX000-28	Nut, HEX M12-1.75, DIN934, STZ C	14
17	N24-508X000-E8	Nut, HEX M5-0.8, DIN934, S-S 18-	6
18	N24-A6EM000-28	Nut, HEX M16-2.0, DIN 934, STZ C	4
19	S07-12DM040-28	SCR, HHCS M12-1.75 X 40 PT, ST SQC C8.8	2
20	S07-A6EM060-28	SCR, HHCS M16-2 X 60 PT, ST Z 8.8	2
21	S07-A6EM070-28	SCR, HHCS M16-2 X 70 PT, ST Z 8.8	2
22	S46-08BM020-28	BHSHCS, M8-1.25 X 20 ST SQC C8.8	4
23	S46-508M016-28	BHSHCS, M5-0.8 X 16, STZ 8.8	16
24	SMF-08BM020-28	SCR, HHCS M8-1.25 X 20 FT, ST Z 8.8	10
25	SMF-08BM025-28	SCR, HHCS M8-1.25 X 25 FT, ST Z 8.8	4
26	SMF-08BM030-28	SCR, HHCS M8-1.25 X 30 FT, ST SQC C8.8	2
27	SMF-10CM030-28	SCR, HHCS M10-1.5 X 30 FT, ST Z 8.8	16
28	SMF-12CM030-28	SCR, HHCS M12-1.5 X 30 FT, ST Z 8.8	8
29	SMF-12DM035-28	SCR, HHCS M12-1.75 X 35 FT, ST Z 8.8	12
30	SMF-508M016-28	SCR, HHCS M5-0.8 X 16 FT, ST SQC C8.8	12
31	T111346	Nut, Clip-ON, M8-1.25	4
32	T112317	Nut, Clip-ON, M5-0.8	20
33	T115965	Clamp, 5" V Band	2
34	T115966	Clamp, 4" V Band	1
35	T115967	Gasket Assembly, 5"	2
36	T115968	Gasket Assembly, 4"	1
37	T117725	Bracket, Left Hand	1
38	T117726	Bracket, Right Hand	1
39	T119206	Clamp, Hose	1
40	T119676	Fitting, Quick Connect Straight	1
41	T119678	Fitting, Quick Connect 90°	1
42	T124633	Nut, Clip, M8 X 1.25	4
43	T125708	Bracket, DEF Pump	1
44	T125710	SCR Suction Line, Heated	1
45	T134130	Bracket	2
46	T134321	Mount, Exhaust	2
47	T134342	Tube, Exhaust	1
48	T134344	Tube, Exhaust	1
49	T135606	Tube, Exhaust	1

REF	PART NO.	DESCRIPTION	QTY
	T150049 (Rev. A)	*Aftertreatment Assembly*	
50	T136102	Mount, Muffler	1
51	T136905	Mount, DEF Tank	1
52	T137095	Cover, DEF Tank	1
53	T137096	Cover	1
54	T137396	Cover, After-Treatment	1
55	T138067	Cover	1
56	T138391	SCR Pressure Line, Heated	1
57	T138392	SCR Return Line, Heated	1
58	T143808	Adapter, NQ PS3-NW8-90	2
59	T148356	Clamp, Worm Drive, #88	4
60	T150274	Tube, Exhaust	1
61	T150413	Insulation, Sleeve, 5 INCH ID	30 IN
62	T150811	Bracket, Mount, ATS	1
63	T150869	Cover	1
64	T150871	Bracket, Mount, ATS	1
65	T150872	Cover, ATS	1
66	W16-010X000-GP	WSH, Lock, SPLT M10 D127B, STL	16
67	W16-012X000-G2	WSH, Lock, SPLT M12 D127B, ST Z	14
68	W16-016X000-G2	WSH, Lock, SPLT M16 D127B, ST SQC	4
69	W16-80MX000-G2	WSH, Lock, SPLT M8 D127B, ST Z	12
70	WMF-50MX000-20	WSH, Flat M5 DIN 125, ST Z	12
71	WMF-50MX000-E8	WSH, Flat M5 DIN125, S-S 18-8	22
72	WMF-80MX000-20	WSH, Flat M8 DIN125, ST Z	20
73	WMH-010X000-Y2	WSH, Flat, Hard M10 D125, ST YZ	32
74	WMH-012X000-Y2	WSH, Flat, Hard M12 D125, ST YZ	36
75	WMH-016X000-20	WSH, Flat, Hard M16 D125, ST SQC	8

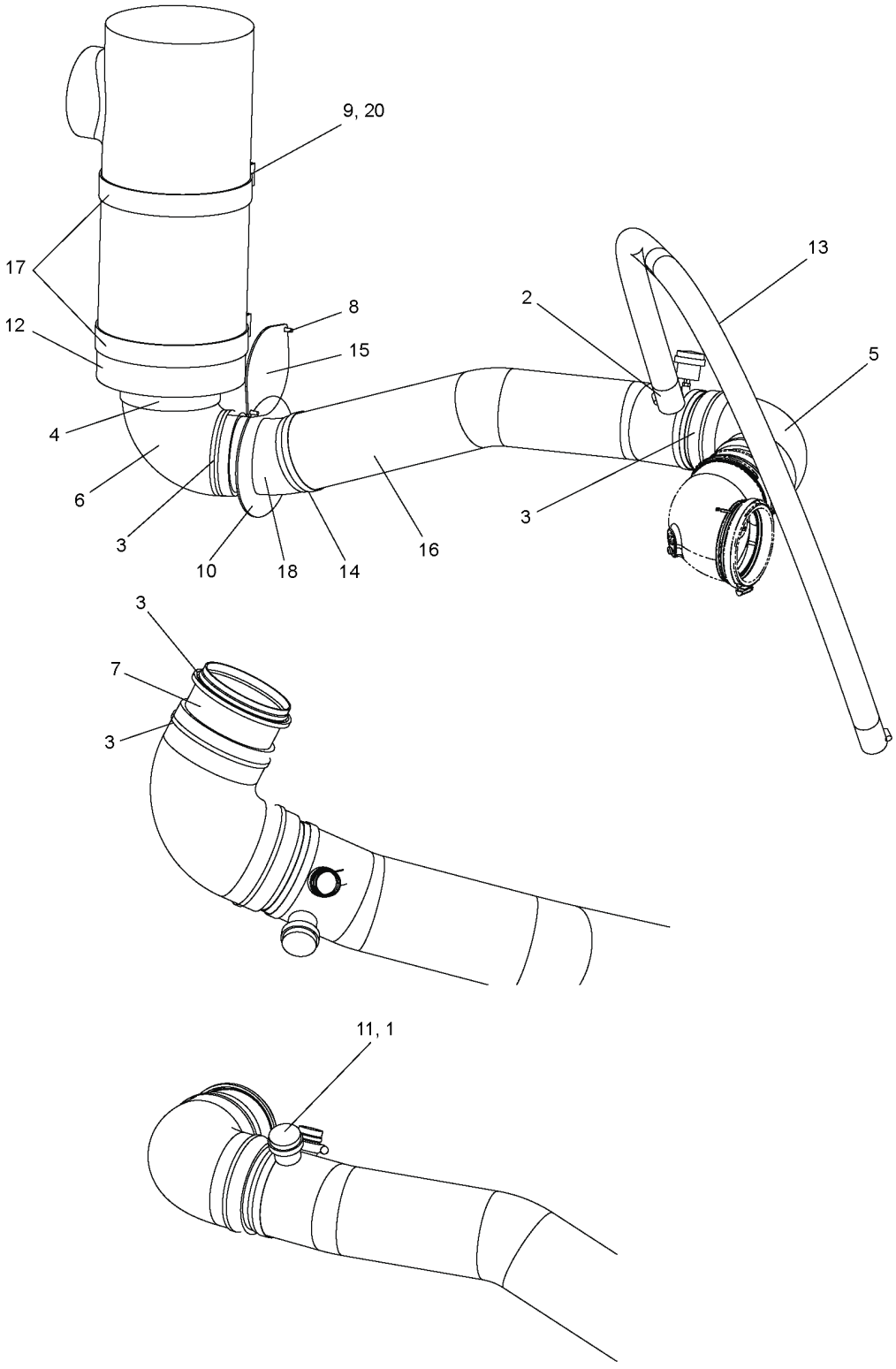

WHEN ORDERING PARTS, SPECIFY MODEL NUMBER, SERIAL NUMBER AND DESCRIPTION OF PARTS REQUIRED

LOAD KING BY CUSTOM TRUCK ONE SOURCE

AIR INTAKE ASSEMBLY-DD13

DATE: Released 08-2018

MODEL: 480-126

PAGE: 382

CHAPTER

2

REF	PART NO.	DESCRIPTION	QTY
	T150050 (Rev. A)	*Air Intake ASSY-DD13*	
1	1219-99	Nipple Close 215PN-2	1
2	1240-15	Hose-Clamp 3/4"	2
3	1240-245	Clamp 5.38 TI 5.69	4
4	1240-285	1240-285	1
5	1243-156	Elbow, 90° 5 INCH ID	1
6	1243-163	Elbow 5 INCH X 6 INCH	1
7	717-0248	Tube, Insert Connection	1
8	S46-06AM016-28	BHSHCS, M6-1.0 X 16	12
9	SMF-10CM020-28	SCR, HHCS M10-1.5 X 20 FT, ST Z 8.8	4
10	T138390	Seal	1
11	T139554	Indicator, Restrictor	1
12	T141442	Cleaner, Air	1
13	T148264	Hose, 1-3/8" ID	1
14	T148356	Clamp, Worm Drive, #88	2
15	T148357	Cover Plate	1
16	T150413	Insulation, Sleeve, 5 INCH ID	2.25 FT
17	T151472	Clamp, Band, 9.8"	2
18	T153818	Pipe, Intake	1
19*	**T153822**	Grill, Front (see page 384)	1
20	W16-010X000-G2	WSH, Lock, SPLT M10 D127B, ST Z	4

* ITEM NOT SHOWN IN ILLUSTRATION

WHEN ORDERING PARTS, SPECIFY MODEL NUMBER, SERIAL NUMBER AND DESCRIPTION OF PARTS REQUIRED

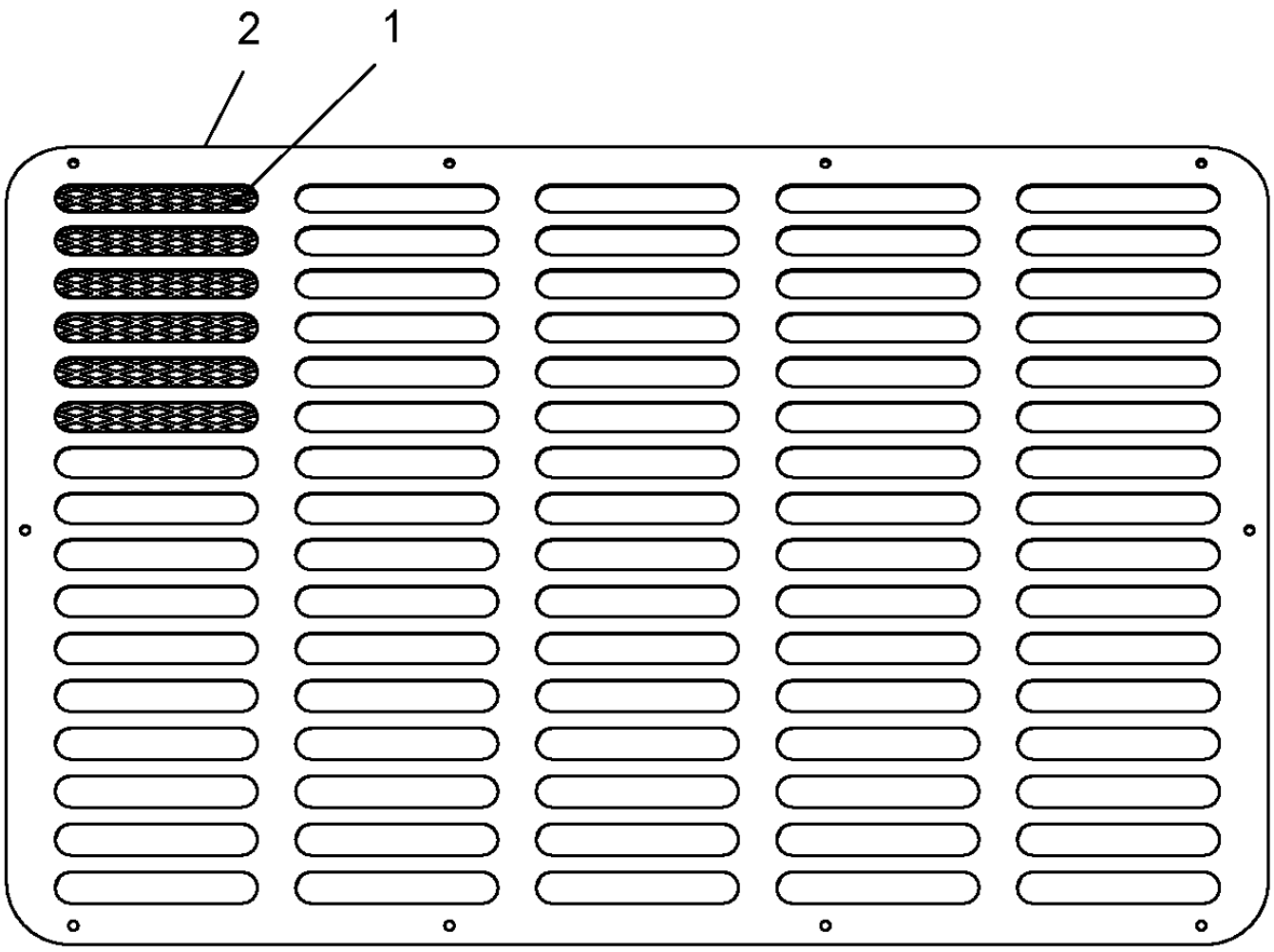

REF	PART NO.	DESCRIPTION	QTY
	T153822 (Rev. A)	*Grill, Front*	
1	T153821	Screen, Grill	1
2	T153820	Grill	1

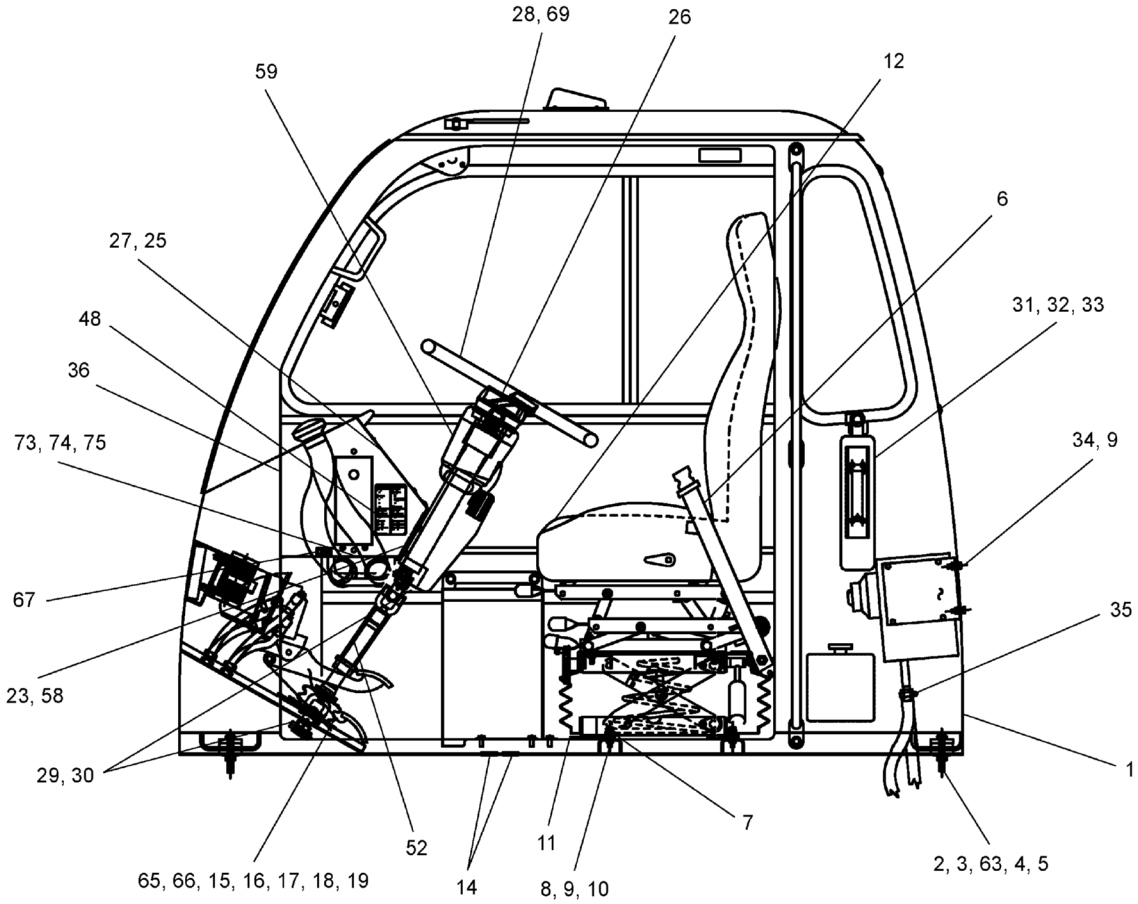

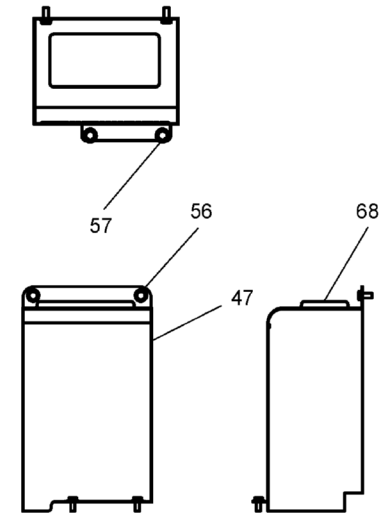

DETAIL OF SHIFT TOWER ASSEMBLY

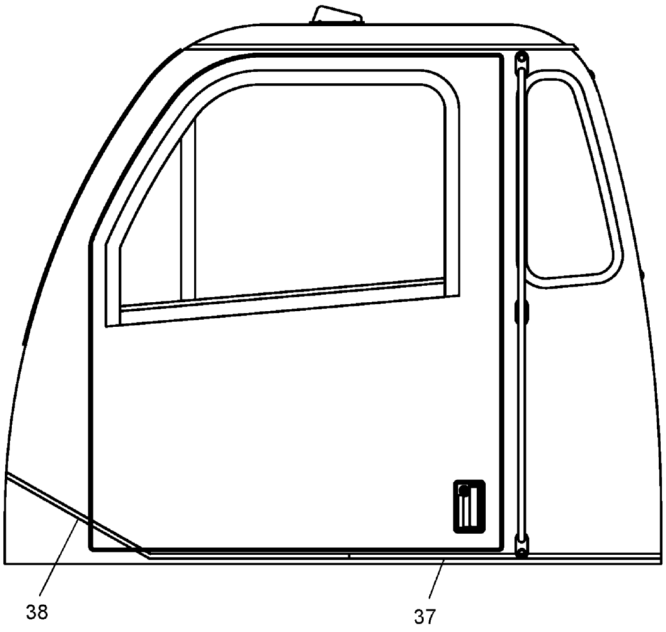

WHEN ORDERING PARTS, SPECIFY MODEL NUMBER, SERIAL NUMBER AND DESCRIPTION OF PARTS REQUIRED

LOAD KING BY CUSTOM TRUCK ONE SOURCE

LOWER CAB ASSEMBLY, DD13 (DOMESTIC)

DATE: Released 08-2018

MODEL: 480-126

PAGE: 385

CHAPTER 2

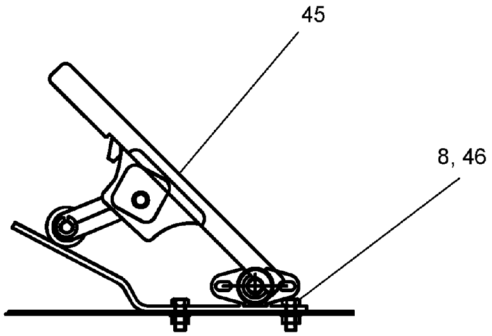

DETAIL OF FOOT PEDAL

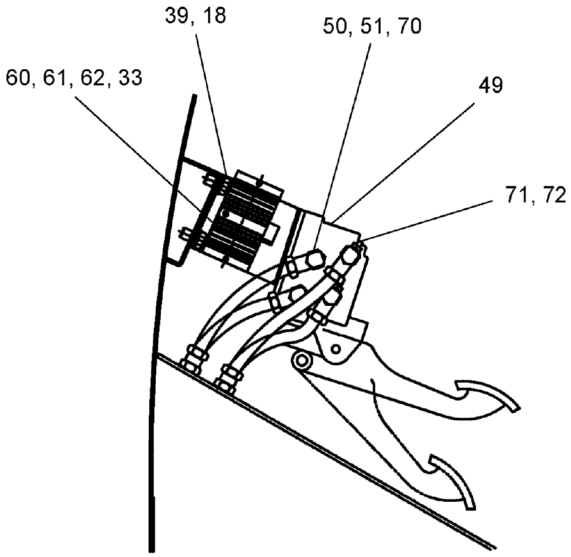

DETAIL OF BRAKE TREADLE

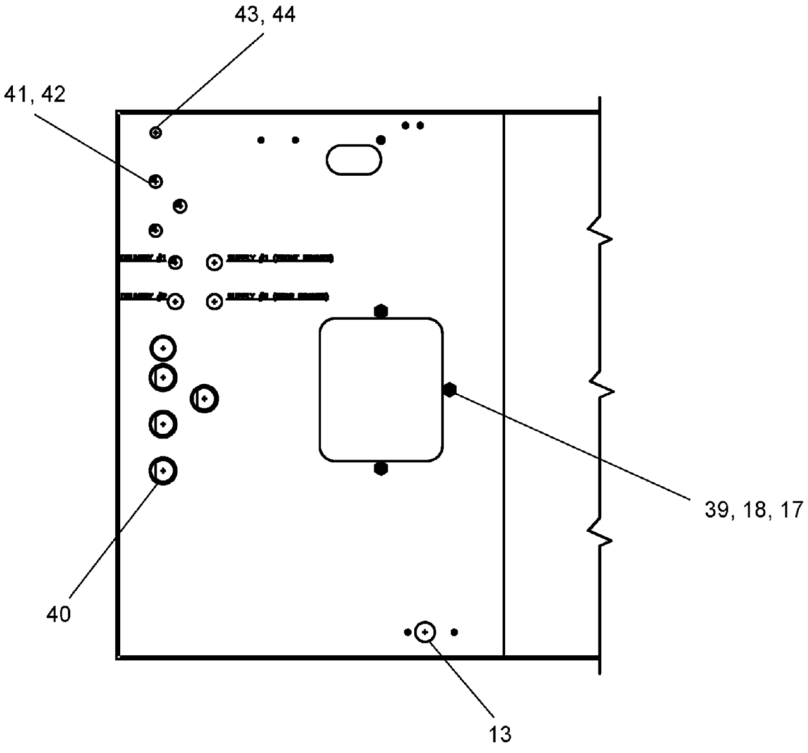

DETAIL OF FLOOR

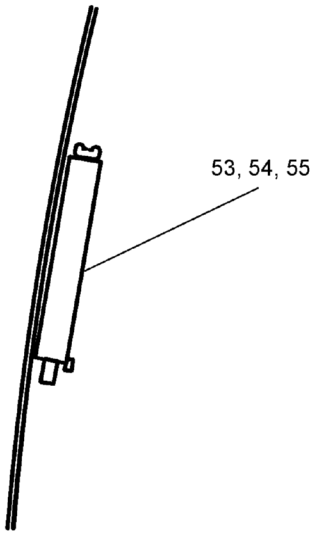

DETAIL OF CPC4

REF	PART NO.	DESCRIPTION	QTY
	T150052 (Rev. A)	*Lower Cab Assembly, DD13*	
1	**T150876**	Cab, Carrier, 2017 (see page 355)	1
2	S01-500CC00-25	SCR, HHCS 0.50-13 X 3.00, ST Z GR5	4
3	NYL-500C000-25	Nut, Lock, .50C	4
4	707-7169	Washer	8
5	1221-128	Mount, Rubber	4
6	45528	Seat Belt ASSY	1
7	707-7712	Spacer	2
8	S01-312CA00-25	Capscrew, .31C X 1.00	6
9	NYL-312C000-25	Nut, HEX NYL-INS 0.312-18, ST SQC G5	8
10	WAW-31WX000-20	WSH, FL TYPA-WID 0.3125, ST SQC	4
11	717-0700	Plate, Cover	1
12	714-1287	Seat, High Back	1
13	1222-276	2" Dome Plug	2
14	1221-62	Grommet	2
15	45007	Cover	1
16	SHF-375C750-25	SCR, HHCS FT 0.375-16 X 0.75, STZ G5	4
17	N04-375C000-25	Nut, HEX 0.375- 16, ST Z GR5	7
18	W07-375X000-20	Washer Lock 3/8 MED	11
19	1211-12	Screw, Self Tap, .31C X .75	4
20*	719A0228	Louver	2
21*	719-0481	Hose, Duct	1
22*	1240-94	Clamp	4
23	1203-94	Capscrew, .38C X 1.50	4
24*	730-2168	Sticker	8
25	1202-9	Bolt, #10-32 X .50	12
26	1205-234	Nut, Jam, 7/8-20	1
27	**T150053**	Lower Dash Assembly DD13 GHG'17 (see page 389)	1
28	**717-1215**	18" Steering Wheel ASSY (see page 394)	1
29	1229-191	HHCS, .44F X 1.75, GRD 8	4
30	NYL-438F000-25	Nut, Lock, .44F	4
31	1222-217	Extinguisher, Fire	1
32	1202-7	Bolt, Stove, #10-24 X 1.00	4
33	1230-6	KIPS, #10-24	6
34	S01-321CA50-25	Capscrew, .31C X 1.50	4
35	200B0087-2	Clamp	4
36	709-6827	Bracket	1
37	714-0258	Mat, Floor-Rear	1
38	714-0257	Mat, Floor-Front	1
39	SHF-375CA00-25	HHCS 3/8 NC X 1 GR5 Zinc	7
40	1221-45	Grommet	4
41	12019-388	Bulkhead Union #62NBH	4
42	12203-30	Tube, 3/8 Inch Black	3
43	12019-387	Union	2
44	12179-1	Tube, Yellow	31 IN
45	**300-00501**	Electric Throttle Control Pedal (see page 395)	1
46	W07-312X000-20	WSH, LCK, MED SPLT 0.3125, ST SQC	2
47	T133441	Shift Tower Ultrashift	1
48	T156182	Decal, Fuse Block, Lower TC Cab	1
49	**714A1481**	Brake Assembly (see page 369)	1

* ITEM NOT SHOWN IN ILLUSTRATION

WHEN ORDERING PARTS, SPECIFY MODEL NUMBER, SERIAL NUMBER AND DESCRIPTION OF PARTS REQUIRED

REF	PART NO.	DESCRIPTION	QTY
	T150052 (Rev. A)	*Lower Cab Assembly, DD13*	
50	12202-18	Tube, 1/4 Inch Black	2
51	12204-6	Tube, 1/2 Inch Black	1
52	T127250	Column, Steering Shaft	1
53	CPC4	CPC4	REF
54	722-0165-1	VELCRO Hook	12IN
55	722-0166-1	VELCRO Loop	12IN
56	WAW25WX000-20	WSH, FL TYPA-WID 0.25 ST 2	4
57	SHS-250X750-20	Screw, Self Tap, .25C X .75	4
58	WAW-37WX000-20	WSH, FL TYPA-WID 0.375, ST Z	4
59	717-1213	Column, Steering	1
60	1223-1046	DRL Module	1
61	1202-4	#10-24 X .50 LG SCR.	2
62	N23-190C000-20	Nut, HEX, MACH 10-24, ST Z	2
63	WAW-50WX000-20	WSH, FL TYPA-WID 0.50, ST SQC	4
64*	1222-202	Plastic Tie	8
65	714-1603	Boot, Steering Shaft	1
66	T127251	Seal, Steering Shaft	1
67	T118093	Decal, OBD	1
68	T126170	Shift Console	1
69	717-1216	Button, Horn	1
70	12203-10	Tube, 3/8 Inch Black	1
71	12204-9	Tube, 1/2 Inch Black	1
72	12204-7	Tube, 1/2 Inch Black	1
73	T157159	Bracket, Relay Box	1
74	SHF-250C625-25	SCR, HHCS FT 0.25-20 X 0.625, STZ G5	6
75	WAN-25NX000-20	WSH, FL TYPA-NRW 0.25, ST Z	6
76*	SMF-06AM025-28	SCR, HHCS M6-1 X 25 FT, ST Z 8.8	2

* ITEM NOT SHOWN IN ILLUSTRATION

WHEN ORDERING PARTS, SPECIFY MODEL NUMBER, SERIAL NUMBER AND DESCRIPTION OF PARTS REQUIRED

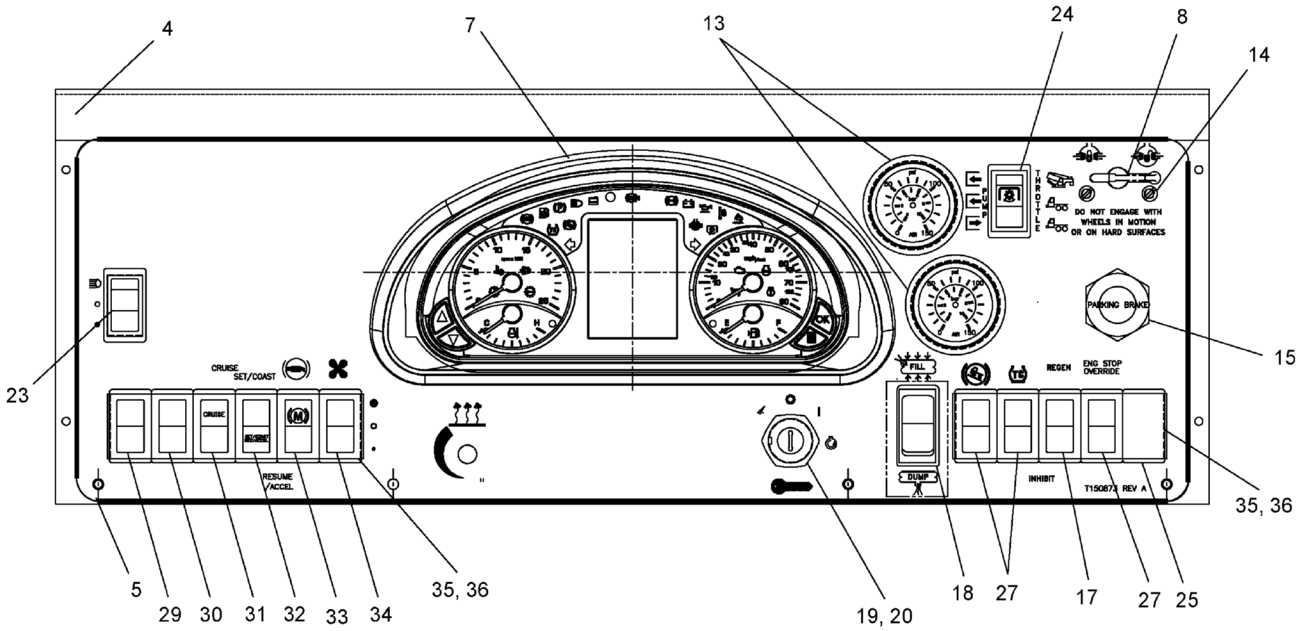

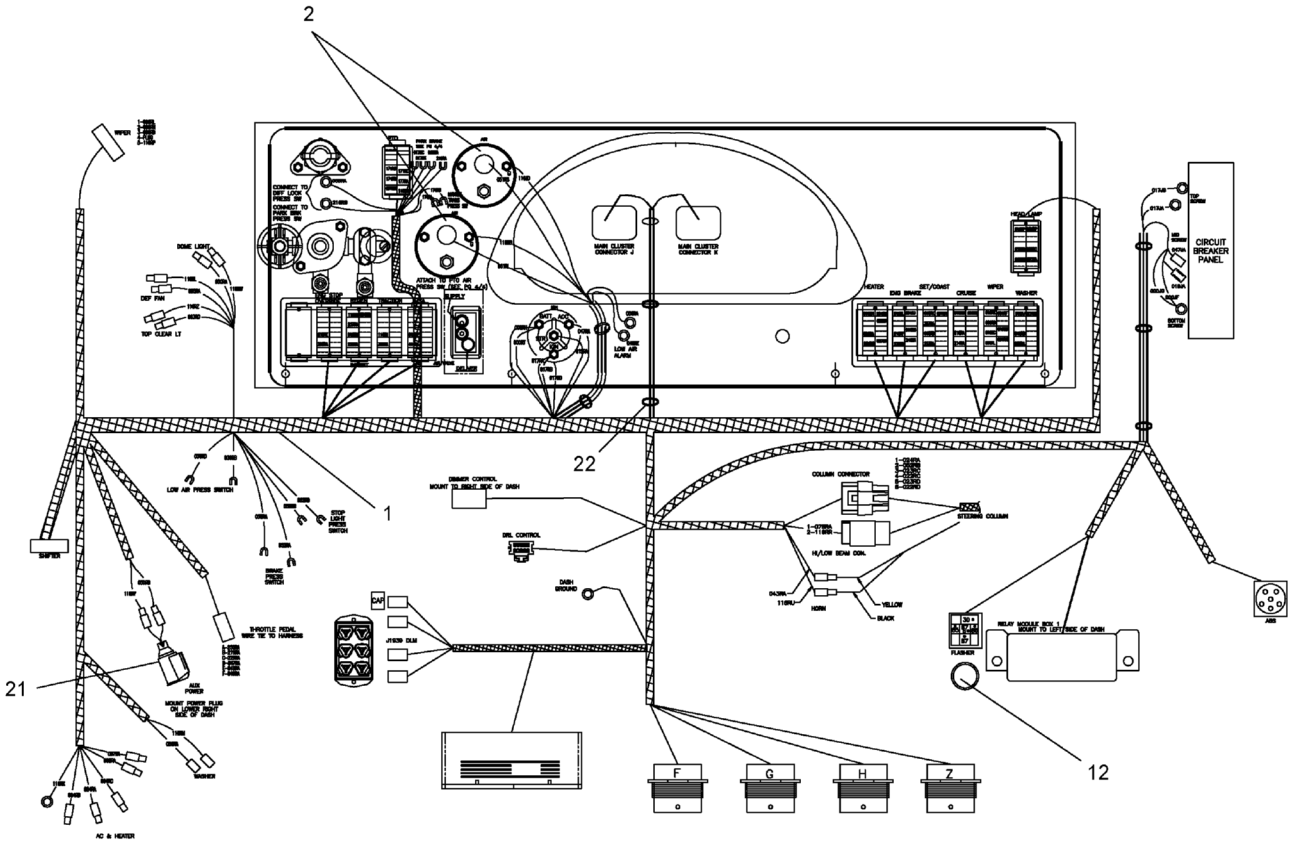

WHEN ORDERING PARTS, SPECIFY MODEL NUMBER, SERIAL NUMBER AND DESCRIPTION OF PARTS REQUIRED

LOAD KING BY CUSTOM TRUCK ONE SOURCE

LOWER DASH ASSEMBLY DD13 GHG'17 (DOMESTIC)

DATE: Released 08-2018

MODEL: 480-126

PAGE: 389

CHAPTER

2

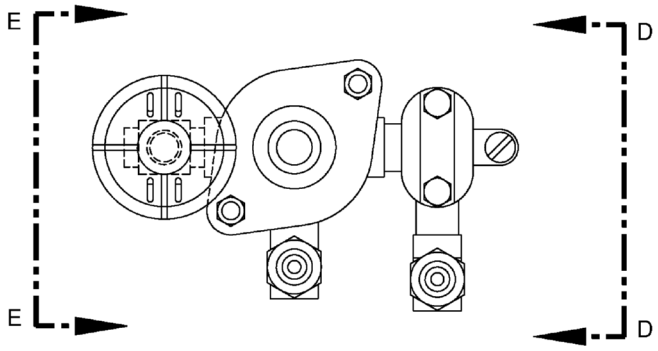

DETAIL OF PARKING BRAKE
AIR HOSE CONNECTORS & PRESS SWITCH

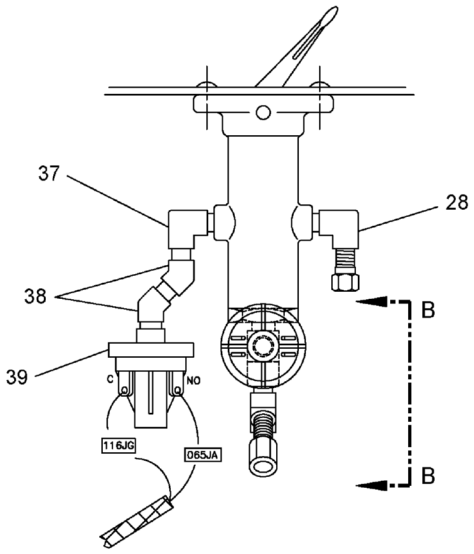

DETAIL OF DIFF LOCK & PTO
AIR HOSE CONNECTORS & PRESS SWITCH

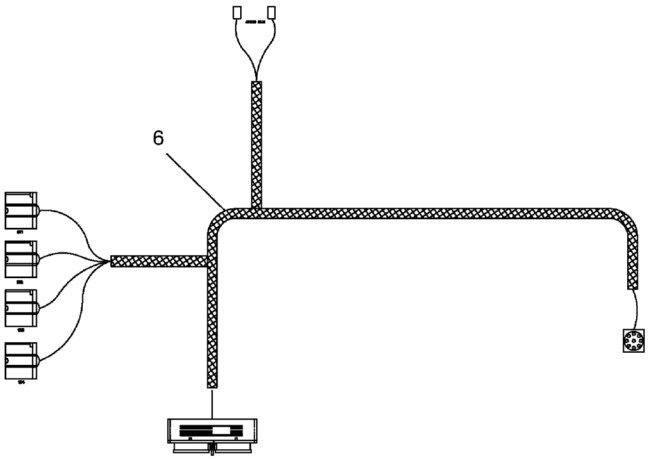

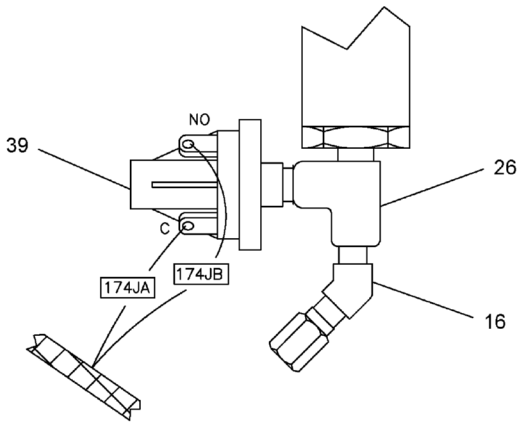

VIEW B - B

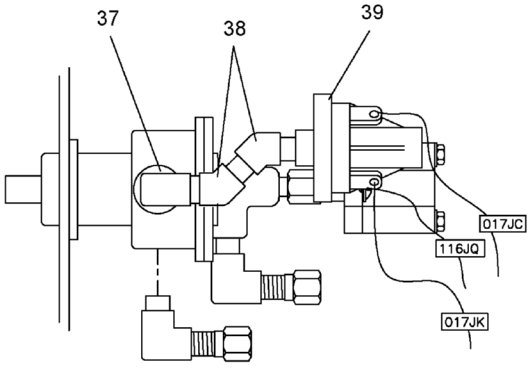

VIEW E - E

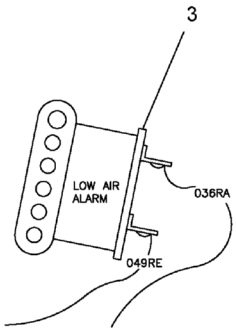

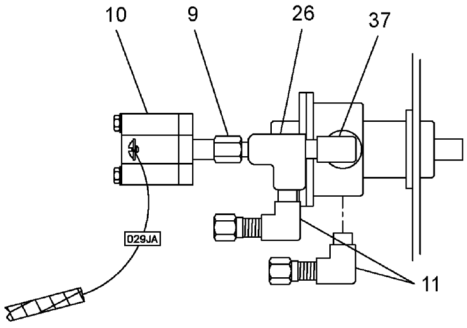

VIEW D - D

WHEN ORDERING PARTS, SPECIFY MODEL NUMBER, SERIAL NUMBER AND DESCRIPTION OF PARTS REQUIRED

REF	PART NO.	DESCRIPTION	QTY
	T150053 (Rev. A)	*Lower Dash Assembly DD13 GHG'17*	
1	T150384	Harness, Dash, 2017	1
2	1245-185	Kit, Light	2
3	1223-380	Buzzer, Low Air	1
4	**T141437**	Panel Lower Dash 2017 (see page 392)	1
5	T150873	Decal, Dash	1
6	T150383	Harness, CPC4, DD13, GHG17	1
7	T148345	Gauge Cluster	1
8	12019-731	Air Switch	1
9	1219-52	Adapter	1
10	1223-1060	Switch, Pressure	1
11	T149767	Elbow, 90°, PTC-6-2	2
12	1223-779	Flasher	1
13	1245-184	Gauge, Air Pressure	2
14	SL4-160C500-20	SCR, SLT RND MS 10-24 X 0.500 STZ	2
15	12019-746	Valve, Parking	1
16	T150075	Elbow, 45°, PTC-6-2	1
17	T152081	Switch, Regen	1
18	717-0744	Air Valve	1
19	1223-858	Switch, Ignition (CH751)	1
20	1208-17	Bushing, Machinery	2
21	1223-921	Power Plug	1
22	1222-184	Plastic Tie	8
23	1223-1011	SW Head Light	1
24	1223-1035	SW Rocker PTO Auto	1
25	1223-1006	Plug	1
26	1219-55	T Fitting	2
27	1223-1081	SW Rocker MOM On/Off	3
28	T145513	Elbow, 90°, PTC-4-2	1
29	1223-1030	SW Rocker Washer	1
30	1223-1029	SW Rocker Wiper	1
31	1223-1033	SW Rocker Cruise On	1
32	1223-1034	SW Rocker Set Cruise	1
33	1223-1032	SW Rocker Engine Brake	1
34	1223-1031	SW Rocker Heater	1
35	1223-1004	Gang Mount Center	8
36	1223-1005	Gang Mount End	4
37	1219-4	Adapter, 90°	3
38	1219-59	Adapter, 45°	4
39	1223-547	Switch, Pressure	3
40*	**T150053_CB Panel**	Panel, Circuit Breaker (see page 393)	1

* ITEM NOT SHOWN IN ILLUSTRATION

WHEN ORDERING PARTS, SPECIFY MODEL NUMBER, SERIAL NUMBER AND DESCRIPTION OF PARTS REQUIRED

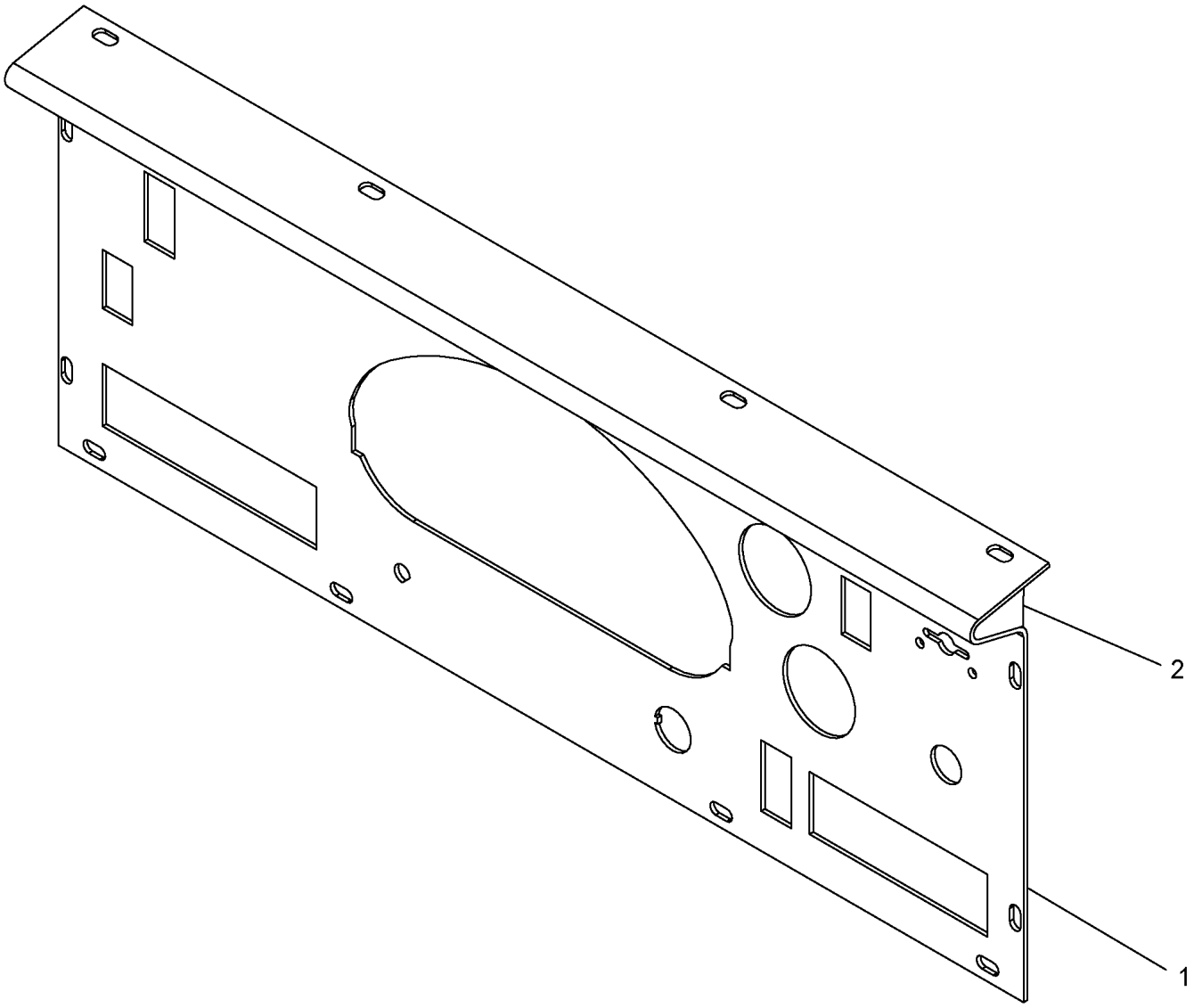

REF	PART NO.	DESCRIPTION	QTY
	T141437 (Rev. A)	*Panel Lower Dash 2017*	
1	T157284	Bracket	1
2	T157285	Plate	2

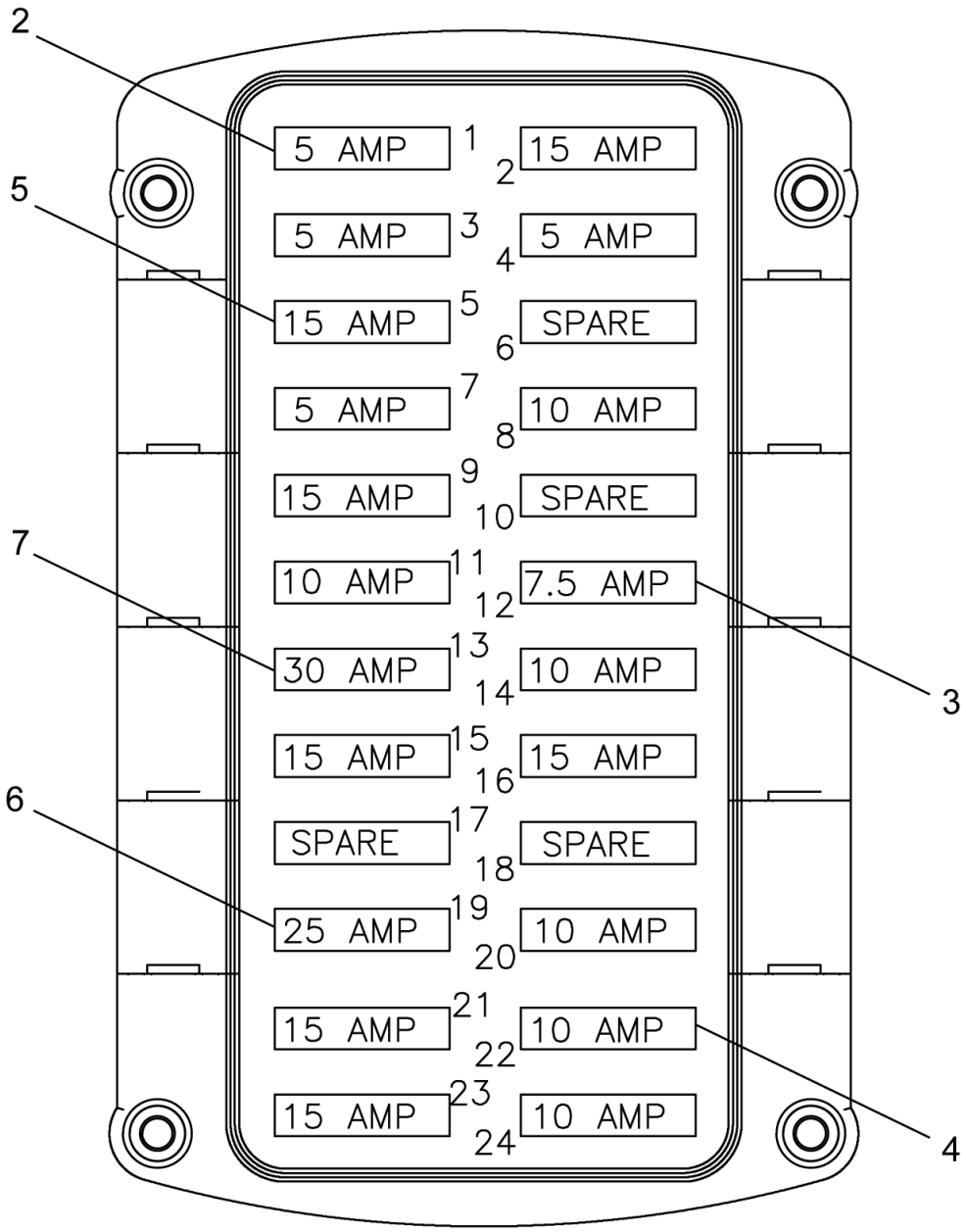

REF	PART NO.	DESCRIPTION	QTY
	T150053_CB Panel (Rev. 00)	*Panel, Circuit Breaker*	
1*	225323	Fuse 1 AMP	1
2	219190	Fuse 5 AMP	1
3	220068	Circuit Breaker, 7.5 AMP	1
4	220069	Circuit Breaker, 10 AMP	1
5	220070	Circuit Breaker, 15 AMP	1
6	220071	Circuit Breaker, 25 AMP	1
7	227805	30 AMP Restable Breaker	1

* ITEM NOT SHOWN IN ILLUSTRATION

WHEN ORDERING PARTS, SPECIFY MODEL NUMBER, SERIAL NUMBER AND DESCRIPTION OF PARTS REQUIRED

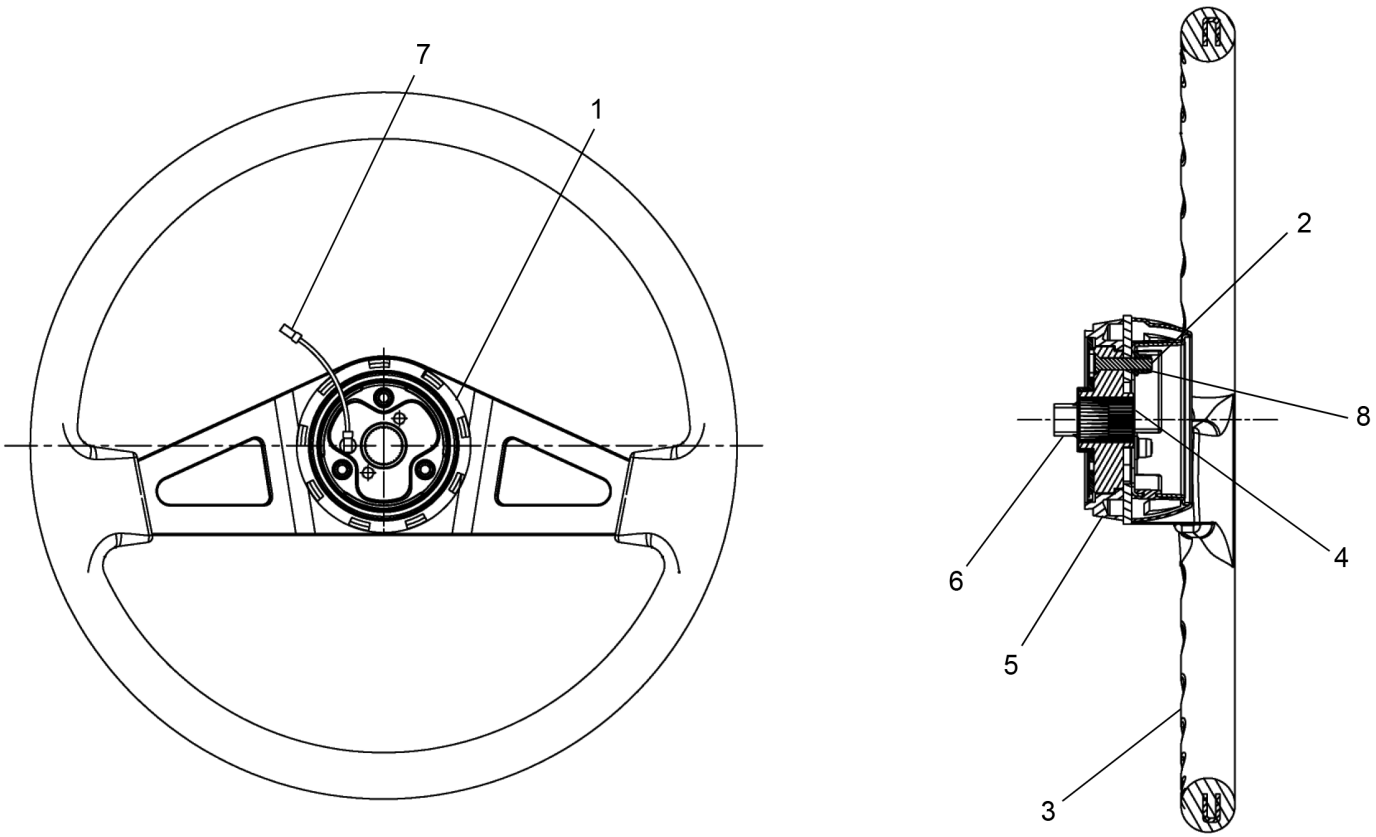

REF	PART NO.	DESCRIPTION	QTY
	717-1215 (Rev. A)	*18" Steering Wheel ASSY*	
1	225248	Top Center Moulding	1
2	225249	HUCK Fastener Pin	3
3	225250	18" 2-Spoke WHL., Black Spokes, Molded Rim	1
4	225251	Steering WHL. Hub 1" X 36 Splines	1
5	225252	Steering WHL. Boot	1
6	225253	Horn/Cancel Plate	1
7	225254	Horn Wire	1
8	225255	Huck Fastener Collar	3

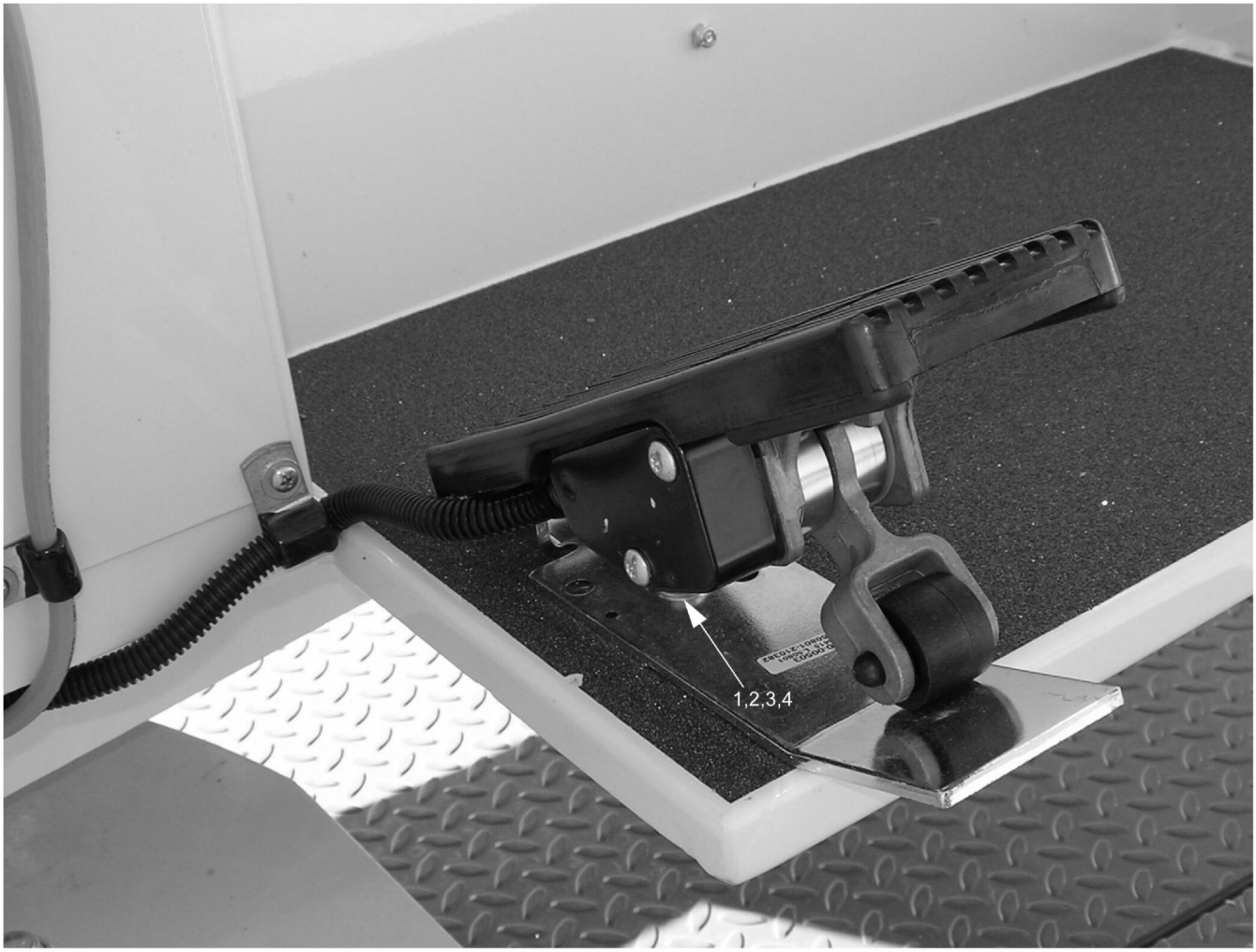

REF	PART NO.	DESCRIPTION	QTY
	300-00501 (Rev. C)	*Electric Throttle Control Pedal*	
	224860	Service Potentiometer	REF
1	220-00003	HHCS 1/4-20NC x .75	2
2	221-00001	HEX Nut 1/4-20NC	2
3	222-00006	Flat Washer 1/4	4
4	222-10005	Lock Washer 1/4	2

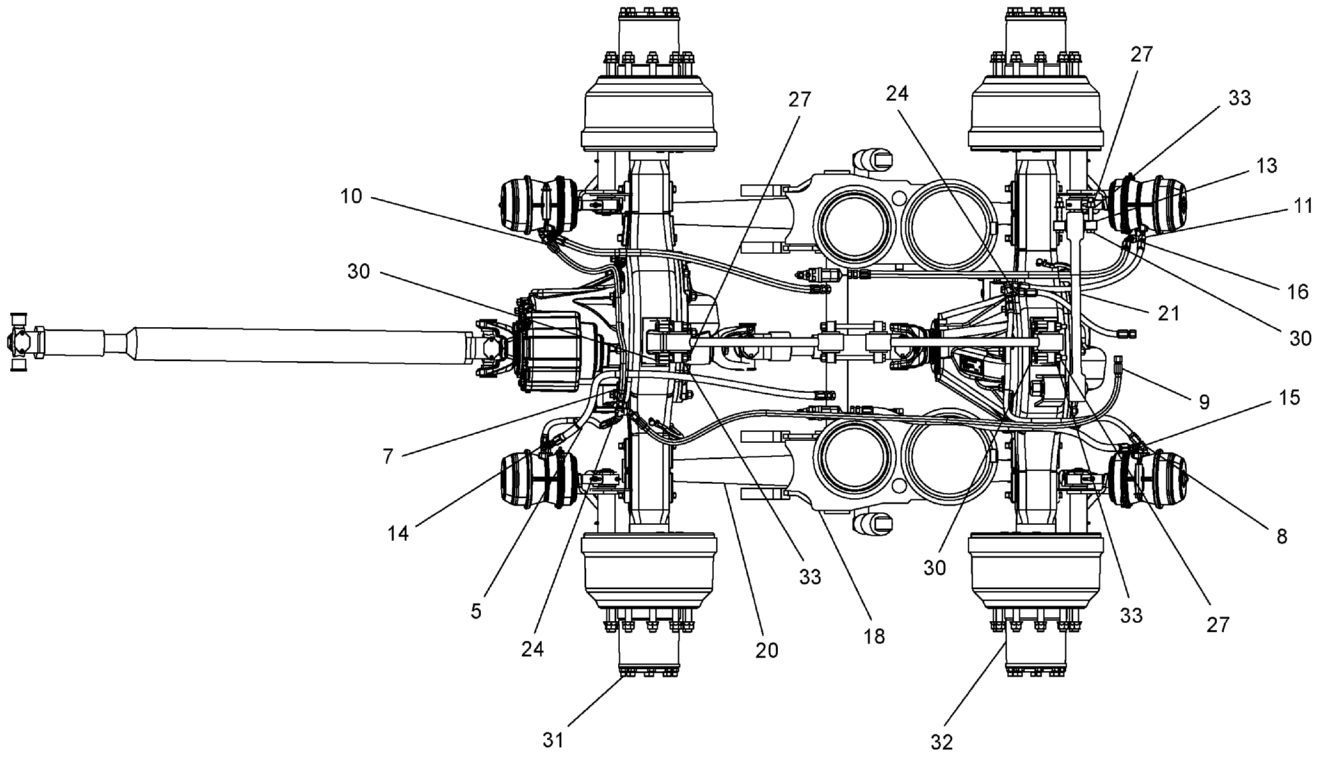
27
24
27
33
13
10
11
30
16
21
30
9
15
7
8
14
33
30
5
33
27
24
20
18
31
32

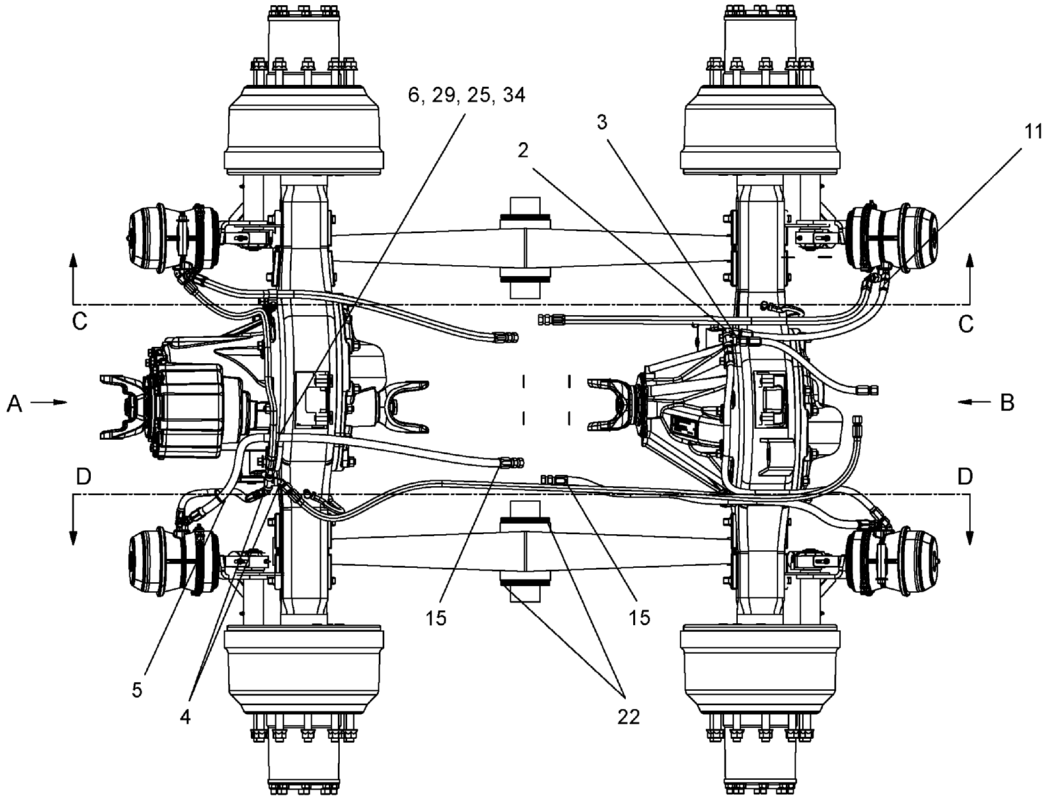
6, 29, 25, 34
3
2
11
C
C
A
B
D
D
15
15
5
4
22

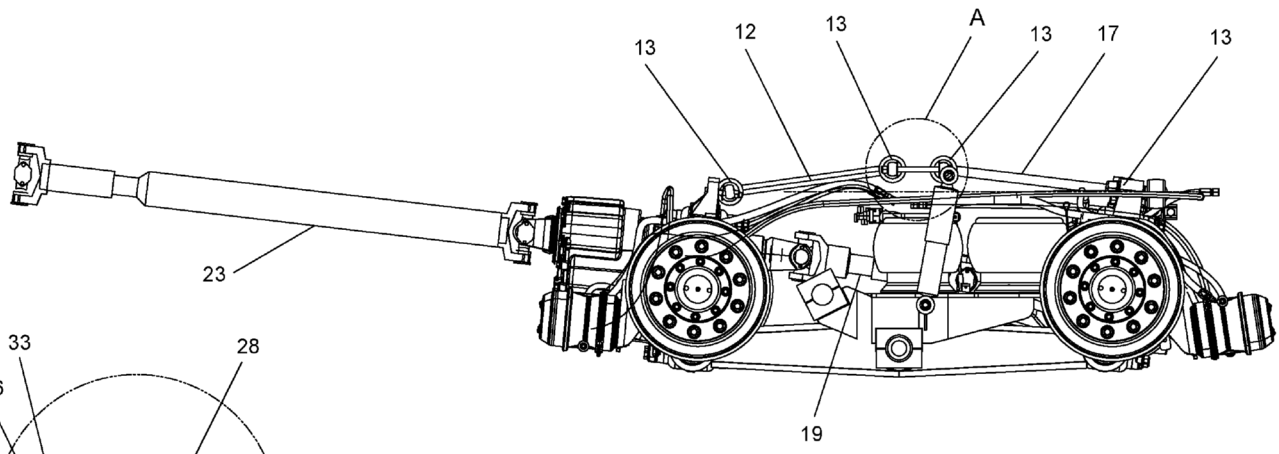

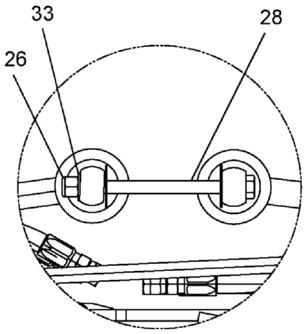

DETAIL A

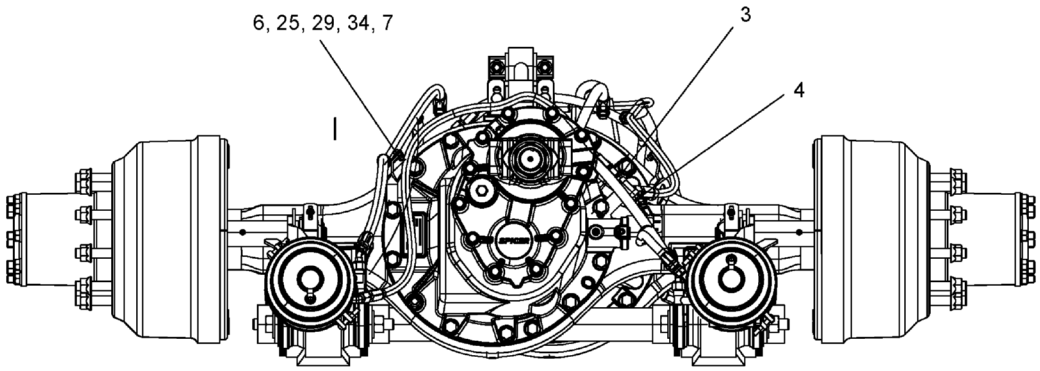

VIEW A

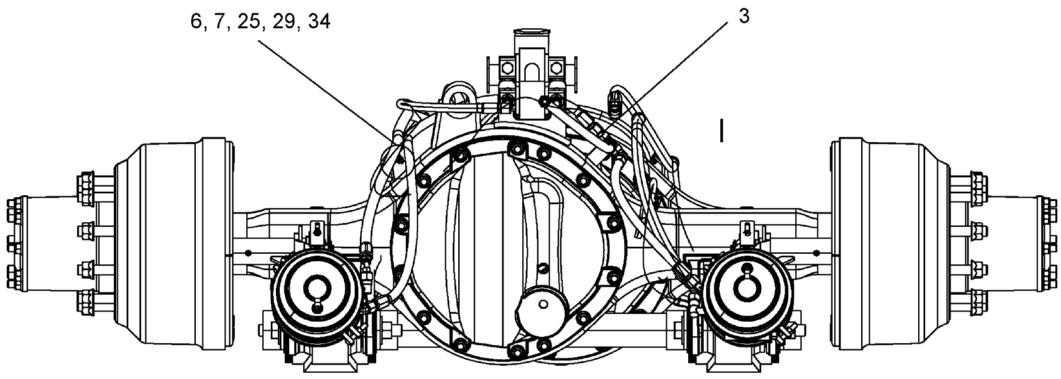

VIEW B

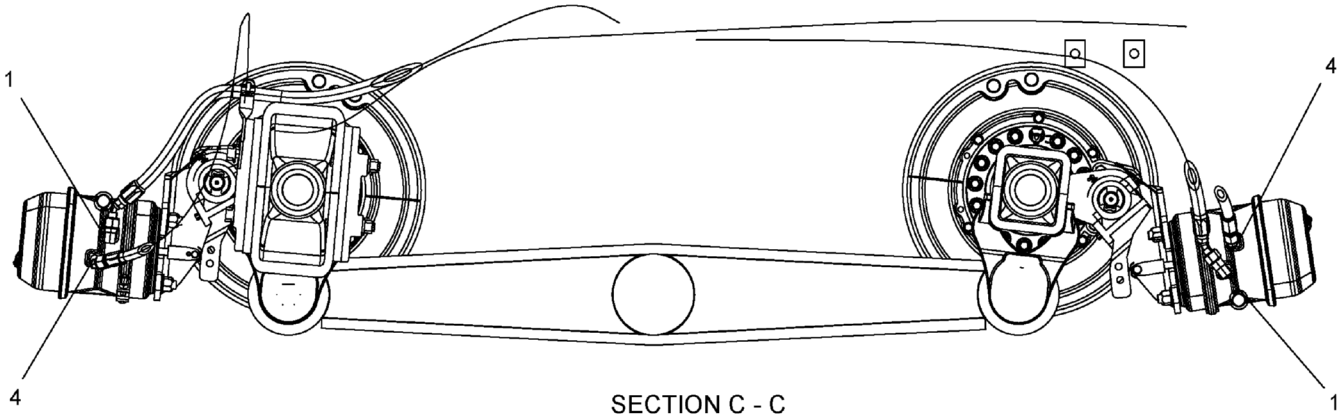

SECTION C - C

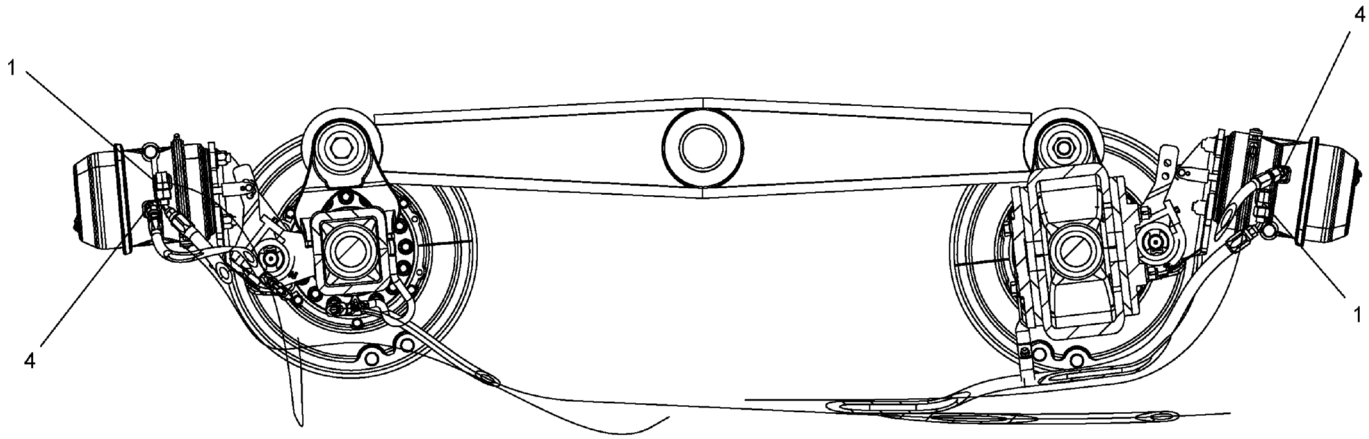

SECTION D - D

REF	PART NO.	DESCRIPTION	QTY
	T148367 (Rev. A)	*Rear Suspension ASSY, T 700-2017*	
1	12019-314	Elbow 5/8"M SAE 3/8"M NPT	4
2	12019-56	Elbow, 90, MSAE-8/ MNPT-6	1
3	12019-63	Adapter, MSAE45-8/MNPT-6	3
4	12019-67	Elbow, 45, MSAE-8/MNPT-6	6
5	1222-184	Plastic Tie	12
6	1240-29	Clamp P, 1.125 DIA	3
7	44821	Support	3
8	707A7144	Hose -8 SAE SW	1
9	707A7210	Hose - SAE SW	1
10	707A7211	Hose -8 SAE SW	1
11	709A5114	Hose -8 JIC SW	2
12	717-0178	Torque Rod	1
13	717-0180	Shim 2.00 X 1.50 X 0.060	10
14	717-0595-18	Hose ASSY .41 ID	1
15	717-0736-46	Hose, ASSY .50 ID	3
16	717-0736-53	Hose ASSY .50 ID	1
17	718-0036	Torque Rod	1
18	718-0129	Lower Suspension Kit	1
19	718-0142	Drive Shaft Inter Axle	1
20	718-0146	Beam Kit 54.00	1
21	718-0969	Torque Rod, Transverse	1
22	718-0980	Shim-Suspension	16
23	718-1033	Drive Shaft-Rear	1
24	F52251	Tee With Bracket	2
25	NFH-312C000-25	Nut, HEX, Flange 0.312-18, ST Z G5	3
26	NYL-625C000-Y8	Nut, HEX NYL-INS 0.625-11, ST YZ G8	2
27	NYL-625F000-Y8	Nut, HEX NYL-INS 0.625-18, ST YZ G8	6
28	S01-625CH50-Y8	SCR, HHCS 0.625-11 X 8.50, ST YZ G8	2
29	SHF-312CA00-25	SCR, HHCS FT 0.312-18 X 1.00, ST Z G5	3
30	SHF-625FD50-Y8	SCR, HHCS FT 0.625-18 X 4.50, ST YZ G8	6
31	T148339	Axle, Drive, Forward	1
32	T148340	Axle, Drive, Rear	1
33	WAH-62NX000-Y2	WSH, FL HRD A-NRW 0.625, ST YZ	8
34	WAW-31WX000-20	WSH, FL TYPA-WID 0.3125, ST SQC	3

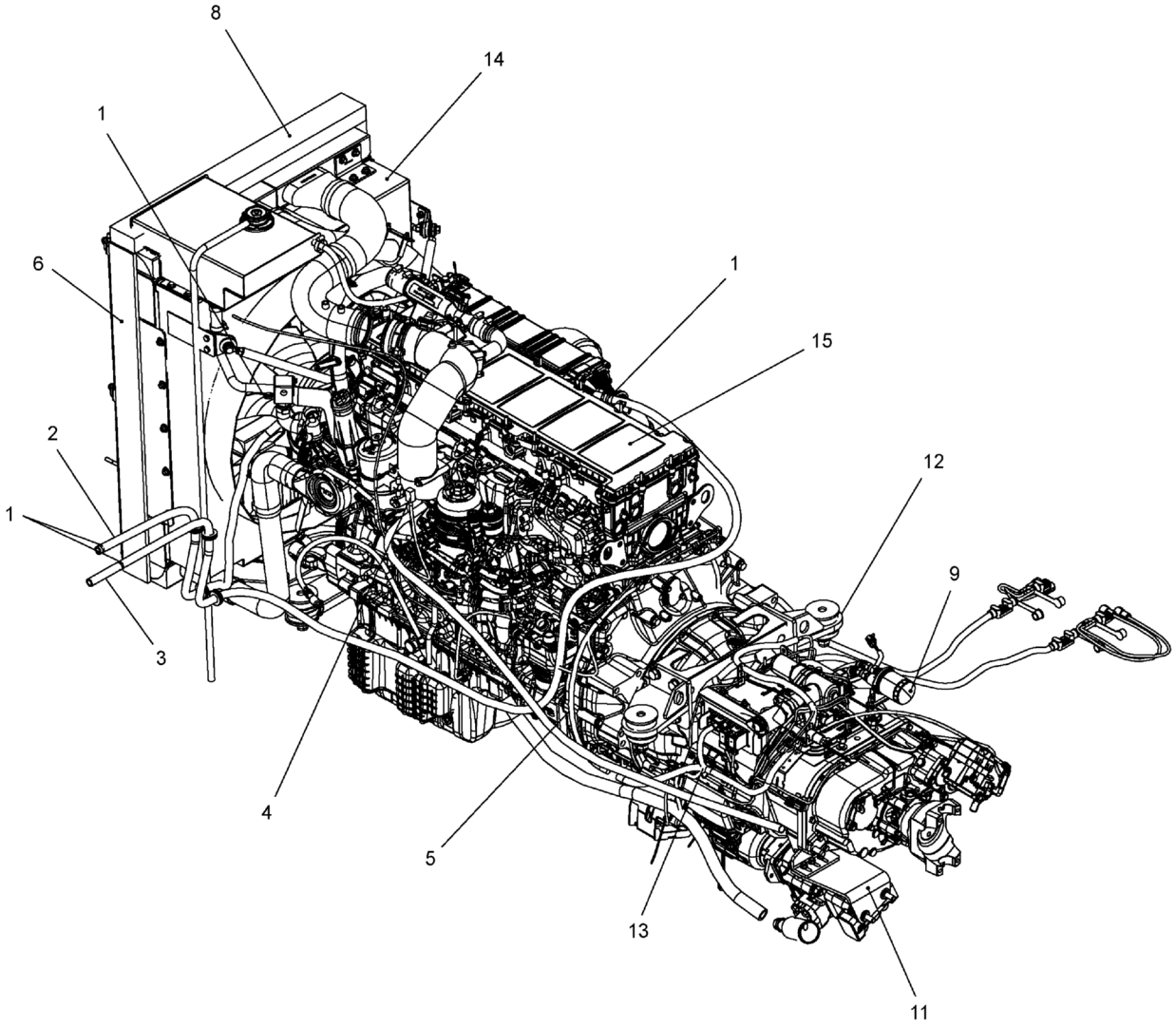

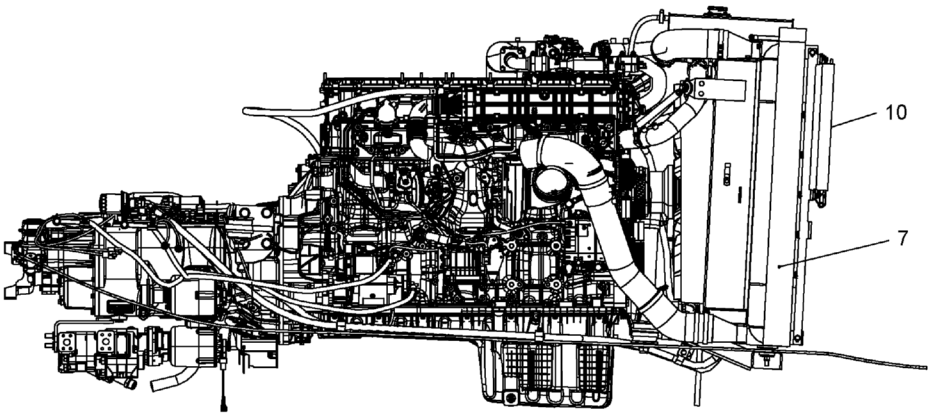

WHEN ORDERING PARTS, SPECIFY MODEL NUMBER, SERIAL NUMBER AND DESCRIPTION OF PARTS REQUIRED

REF	PART NO.	DESCRIPTION	QTY
	T148359 (Rev. A)	*T5/T7 Engine Installation DD13 GHG17*	
1	1240-259	Clamp SZ 10, Stainless	4
2	1276-1-72	Hose, Heater, -10, 72	1
3	1276-1-156	Hose, Heater, -10, 156	1
4	T116936	Harness, Fan Control	1
5	T150382	Harness, Engine DD13, GHG17	1
6	T139129	Foam, Radiator	1
7	T139128	Foam, Radiator	1
8	T139127	Foam, Radiator	1
9	**T135777**	Transmission Filter Assembly (see page 346)	1
10	**T135513**	Kit, AC System-DD13 (see page 402)	1
11	**T133920**	Pump/PTO Assembly (see page 323)	1
12	**T132744**	Mounting, Engine ASSY (see page 405)	1
13	T150388	Harness, Transmission, Ultrashift, 2017	1
14	**T150048**	Cooling Assembly, DD13, GHG17 (see page 407)	1
15	**T148360**	T5/T7 Engine GP-DD13 GHG17 (see page 410)	1

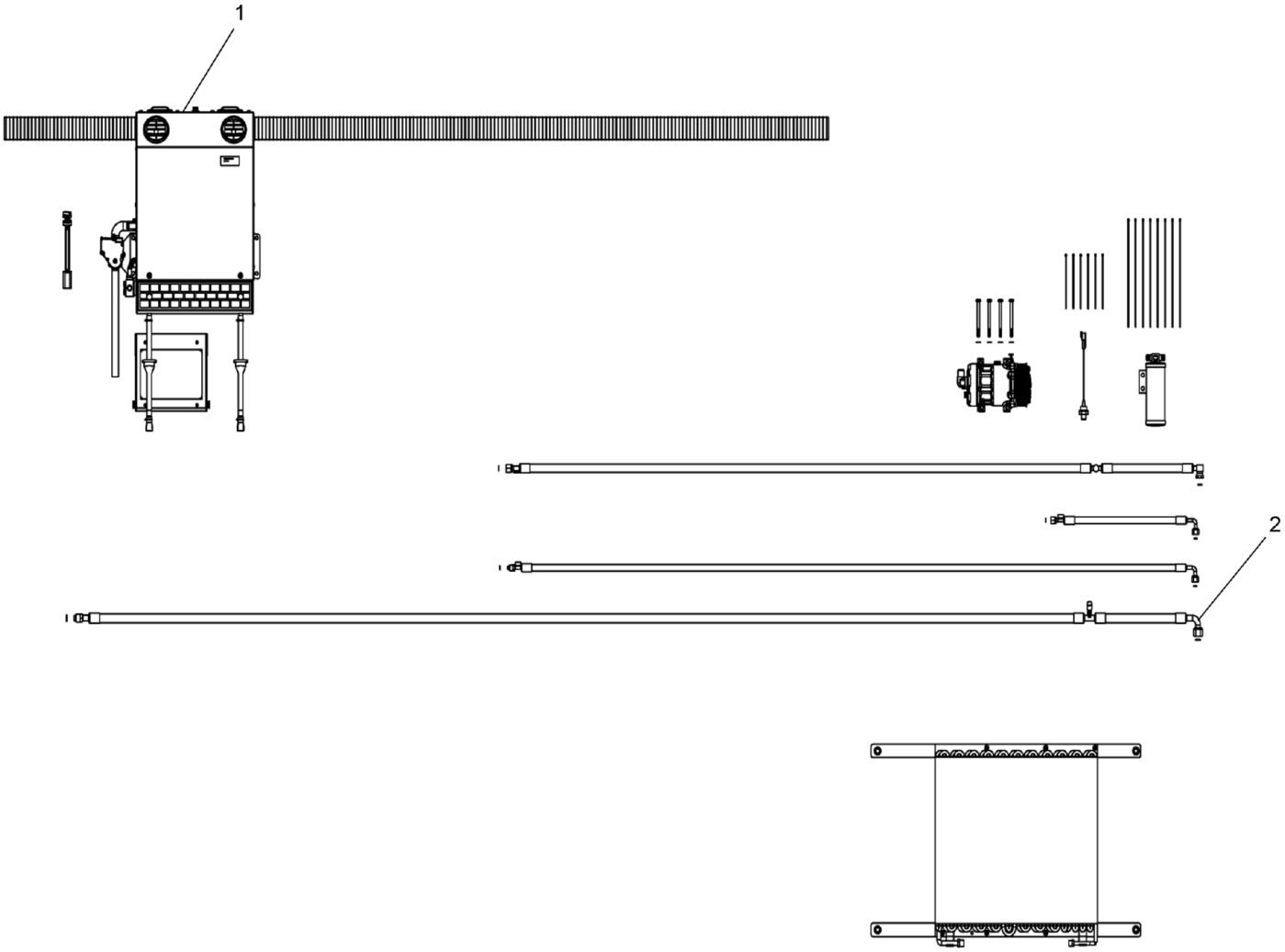

REF	PART NO.	DESCRIPTION	QTY
	T135513 (Rev. A)	*Kit, AC System-DD13*	
1	**T106863**	System, Blower 12V With Water Valve (see page 339)	1
2	**T135511**	Kit, AC Components-DD13 (see page 403)	1

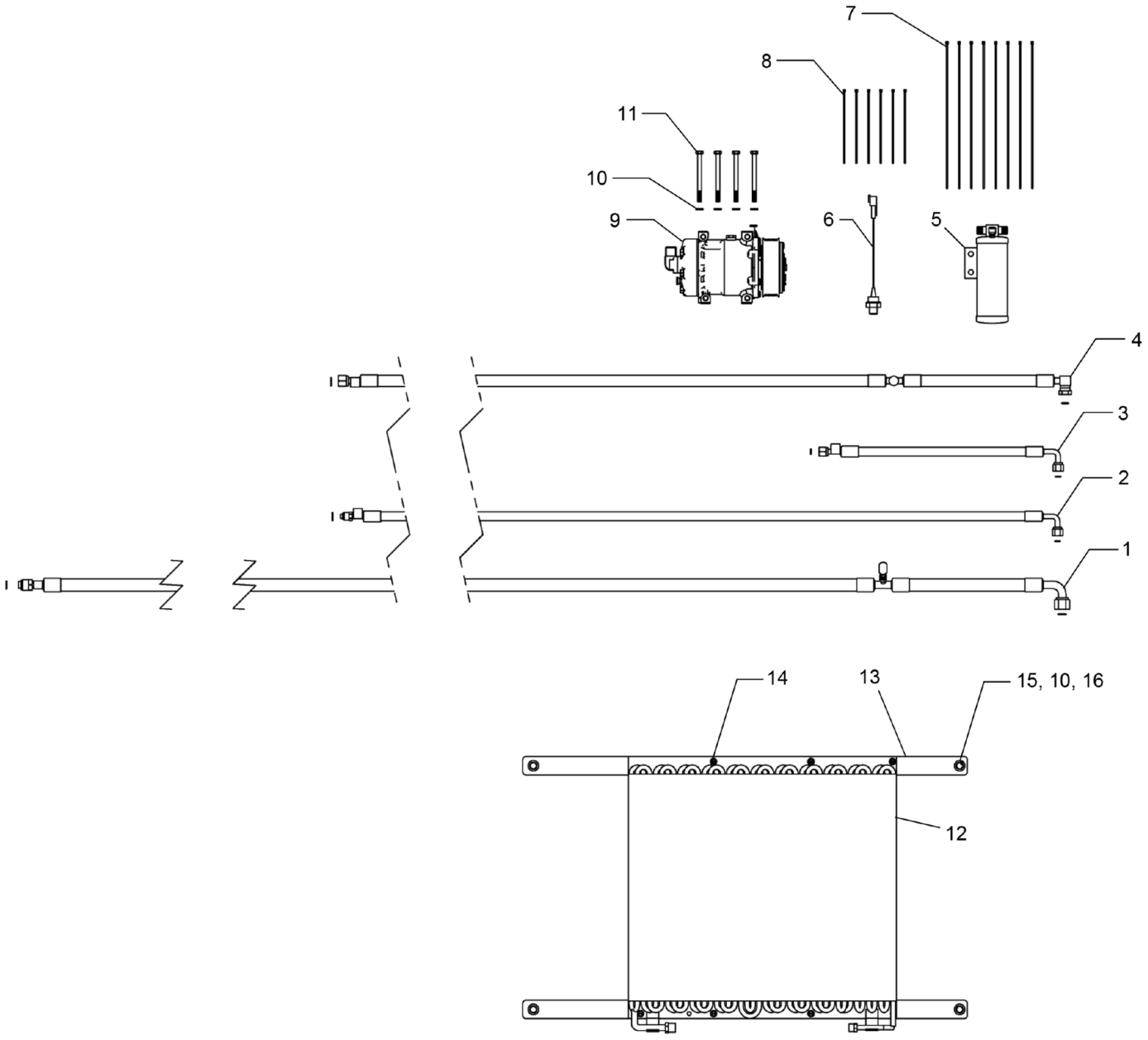

WHEN ORDERING PARTS, SPECIFY MODEL NUMBER, SERIAL NUMBER AND DESCRIPTION OF PARTS REQUIRED

LOAD KING BY CUSTOM TRUCK ONE SOURCE

KIT, ENGINE HVAC DD13 (DOMESTIC)

DATE: Released 08-2018

MODEL: 480-126

PAGE: 403

CHAPTER 2

REF	PART NO.	DESCRIPTION	QTY
	T135511 (Rev. A)	*Kit, AC Components-DD13*	
1	227732	Hose ASSY, #10 EVAP - COMP DD13	1
2	227733	Hose ASSY, #6 RD-TXV	1
3	227734	Hose ASSY, #6 COND-RD	1
4	227735	Hose ASSY, #8 COMP-COND DD13	1
5	T113391	Drier, O-RING 2.5 X 8 W/ BRKT	1
6	T116527	Switch, AC Binary W/ DEUTSCH	1
7	216050	Tie Plastic 15"	8
8	221874	Tie, Plastic 7"	6
9	T134490	Compressor, SD7H15 12V PV8 119 Direct MNT VOR	1
10	222823	Washer Lock .320 ID, YZ	8
11	222822	HHCS M8-1.25 X 100 GR 8.8 ZP	4
12	223843	Coil, COND	1
13	227737	Bar, COND MTG (T500-1/T700)	2
14	221894	HWH Slotted 1/4-20 X .5" - Self Tapping	6
15	227738	HHCS 5/16 NC X 1 1/4 GR8 FT	4
16	221805	Washer, Flat 5/16" ZP	4

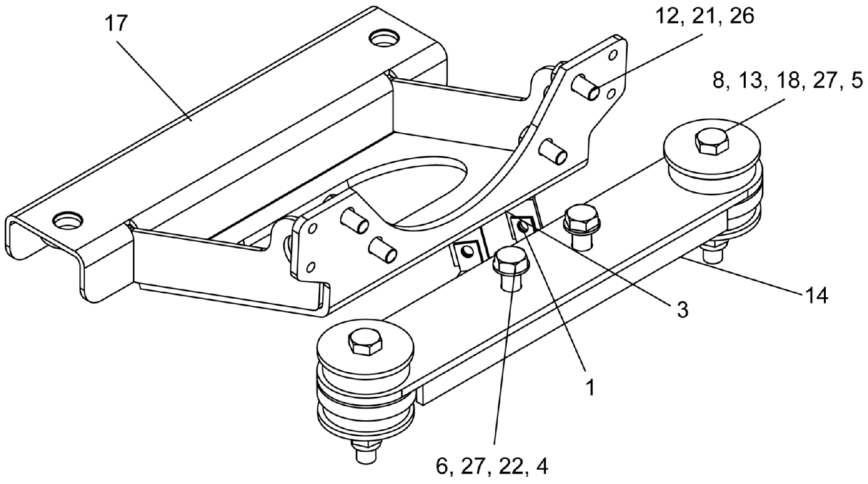
17
12, 21, 26
8, 13, 18, 27, 5
14
3
1
6, 27, 22, 4

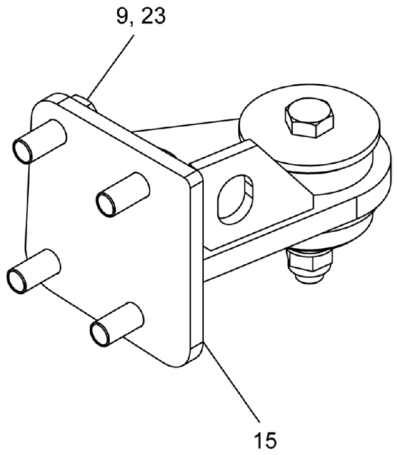
9, 23
15

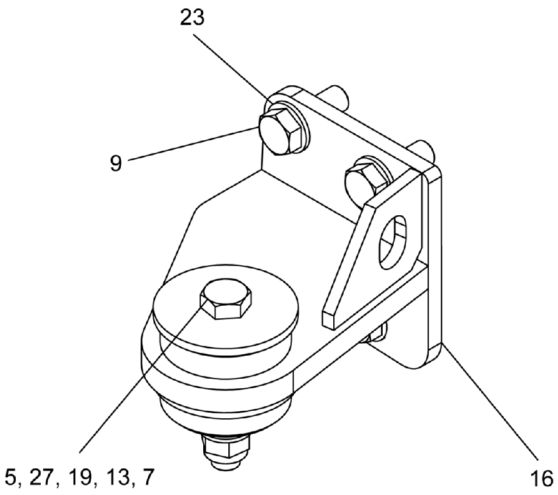
23
9
5, 27, 19, 13, 7
16

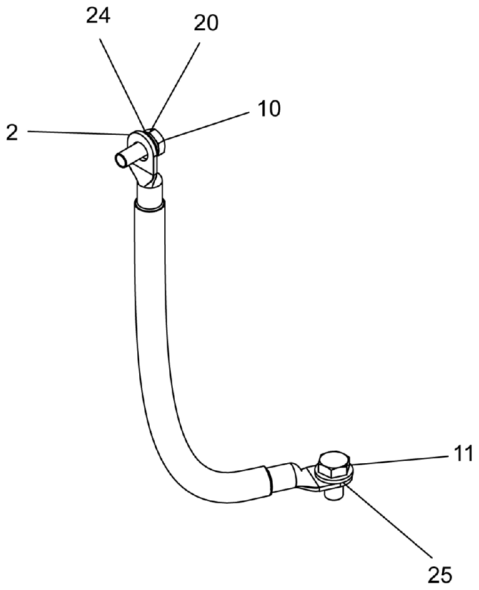
24
20
10
2
11
25

REF	PART NO.	DESCRIPTION	QTY
	T132744 (Rev. D)	*Mounting, Engine ASSY*	
1	1240-29	Clamp P, 1.125 DIA	2
2	707-4526	Cable, Ground	1
3	717-0602	Mount, Clamp	2
4	N24-B0FM000-28	Nut, HEX M20-2.5, DIN 934, ST SQC C8.8	2
5	NYM-20FM000-Y8	Nut, NYL-INS M20-2.5, ST SQC G8	4
6	S07-B0FM100-28	SCR, HHCS M20-2.5 X 100 PT, ST SQC C8.8	2
7	S07-B0FM130-28	SCR, HHCS M20-2.5 X 130 PT, ST SQC C8.8	2
8	S07-B0FM140-28	SCR, HHCS M20-2.5 X 140 PT, ST SQC C8.8	2
9	SHF-750CB00-Y8	SCR, HHCS FT 0.75-10 X 2.00, ST SQC G8	8
10	SMF-10CM025-28	SCR, HHCS M10-1.5 X 25 FT, ST Z 8.8	1
11	SMF-12DM020-28	SCR, HHCS M12-1.75 X 20 FT, ST SQC C8.8	1
12	SMF-A6CM040-28	SCR, HHCS M16-1.5 X 40 FT, ST SQC C8.8	4
13	T104664	Washer, Snubbing	6
14	T133073	Beam Front Weldment	1
15	T133076	Mount, Transmission Weld, RH	1
16	T133077	Mount, Transmission Weld, LH	1
17	T133637	Radiator Mount Weldment	1
18	T135781	Mount, ISO	2
19	T136321	Mount, ISO	2
20	W16-010X000-G2	WSH, Lock, SPLT M10 D127B, ST Z	1
21	W16-016X000-G2	WSH, Lock, SPLT M16 D127B, ST SQC	4
22	W16-020X000-G2	WSH, Lock, SPLT M20 D127B, ST SQC	2
23	WAH-75NX000-20	WSH, FL HRD A-NRW 0.75, ST SQC	8
24	WMF-010X000-20	WSH, Flat M10 DIN125, ST SQC	1
25	WMH-012X000-20	WSH, Flat, Hard M12 D125, ST SQC	1
26	WMH-016X000-20	WSH, Flat, Hard M16 D125, ST SQC	4
27	WMH-020X000-20	WSH, Flat, Hard M20 D125, ST SQC	8

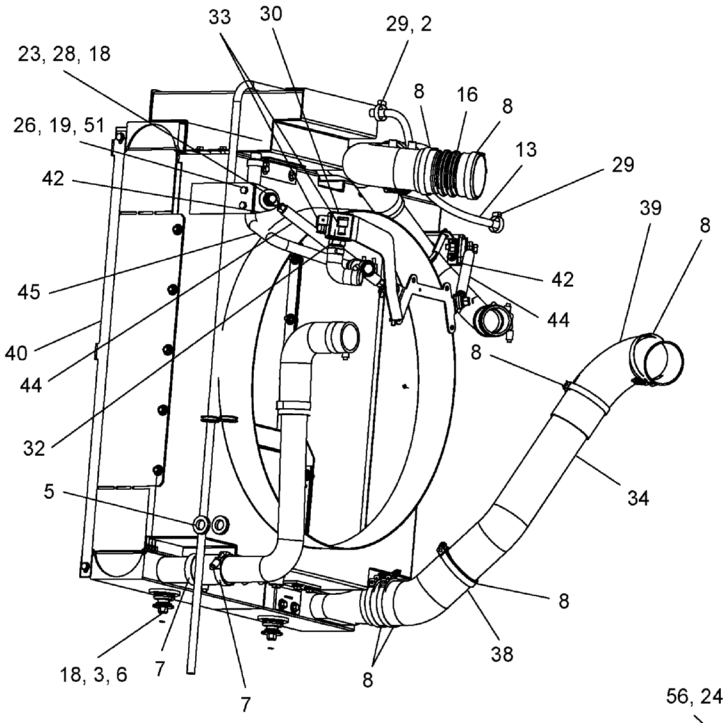

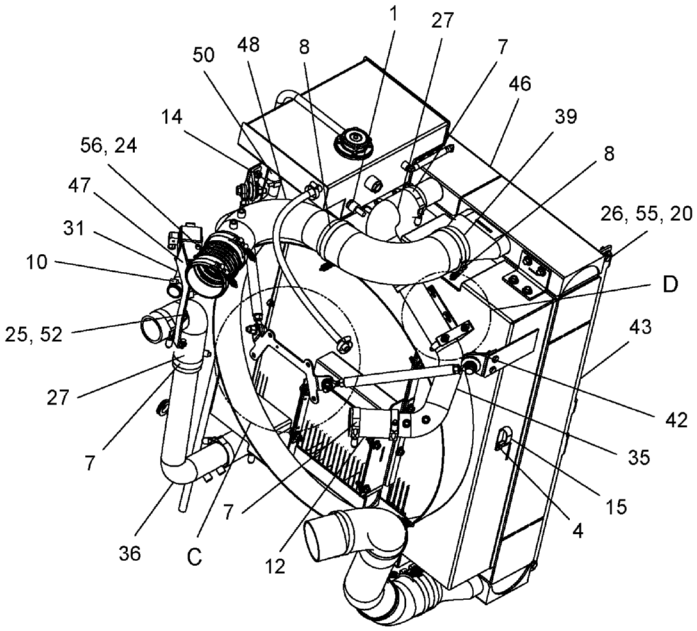

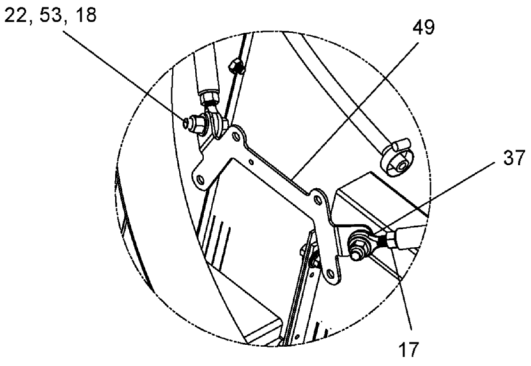

DETAIL C

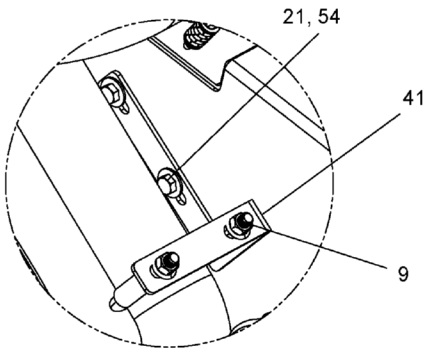

DETAIL D

REF	PART NO.	DESCRIPTION	QTY
	T150048 (Rev. A)	*Cooling Assembly, DD13, GHG17*	
1	12019-181	Adapter, FNPT-4/MNPT-8	1
2	12019-885	Adapter, MNPT-4/HBRB-6	1
3	1209-91	Washer, 0.5 ID X 2.00 OD X 1 GA	4
4	1211-12	Screw, Self Tap, .31C X .75	1
5	1221-66	Grommet	4
6	1221-89	Mount	2
7	1240-101	Clamp, T-Bolt, SAE 60	8
8	1240-275	Clamp, Hose, 4.31''-4.55'' DIA.	9
9	1240-3	Clamp	1
10	1240-74	Hose Clamp, .75-1.75	2
11*	1244-227	Hose, Coolant, 2.50'' ID, 5.0'' LG	4''
12	1244-227	Hose, Coolant, 2.50'' ID, 5.0'' LG	5''
13	12453-1-24	Hose, 3/8 ID, 24" LG	1
14	200B0087-3	Clamp Hose SAE#16	4
15	200B2007-58	Clamp-Medium Duty	1
16	420-3922	Bellows	1
17	N04-500F000-Y8	Nut, HEX 0.50-20, ST YZ GR8	4
18	NYL-500C000-25	Nut, Lock, .50C	6
19	NYM-10CM000-41	Nut, NYL-INS M10-1.5, STZ C8	4
20	NYM-10CM000-Y8	Nut, NYL-INS M10-1.5, ST SQC G8	4
21	S01-312CA00-25	Capscrew, .31C X 1.00	2
22	S01-500CA75-25	SCR, HHCS 0.50-13 X 1.75, ST Z GR5	2
23	S01-500CB75-25	SCR, HHCS 0.50-13 X 2.75, ST Z GR5	2
24	SMF-06AM020-28	SCR, HHCS M6-1 X 20 FT, ST Z 8.8	2
25	SMF-08BM020-28	SCR, HHCS M8-1.25 X 20 FT, ST Z 8.8	2
26	SMF-10CM025-28	SCR, HHCS M10-1.5 X 25 FT, ST Z 8.8	8
27	T113435	Hose, 90°	2
28	T115097	ISO Mount	2
29	T119206	Clamp, Hose	2
30	T120604	Manifold, Coolant Return, DD13	1
31	T120614	Elbow, Rubber, 1-1/4'' ID	1
32	T120661	Fitting, 1-1/4" BARB-TO-1" Pipe	1
33	T120783	Elbow, 90°, 5/8" BARB-TO-1/2"	2
34	T133907	Tube, CAC Lower	1
35	T133908	Tube, Upper RAD	1
36	T133909	Tube, Lower RAD	1
37	T135124	Rod End, Male 1/2	4
38	T136544	Elbow, 45°	1
39	T136545	Elbow, 90°	2
40	T137024	Bracket, A/C	1
41	T137068	Bracket	1
42	T137094	Bracket, Strut	2
43	T137400	Bracket, A/C	1
44	T144683	Strut, Radiator, DD13	2
45	T144979	Tube, Surge, DD13	1
46	T148344	Radiator/CAC/OC, DD13, GHG17	1
47	T150273	Bracket, Manifold	1
48	T150666	Tube, CAC, Upper	1
49	T151649	Bracket, Strut	1

* ITEM NOT SHOWN IN ILLUSTRATION

WHEN ORDERING PARTS, SPECIFY MODEL NUMBER, SERIAL NUMBER AND DESCRIPTION OF PARTS REQUIRED

REF	PART NO.	DESCRIPTION	QTY
	T150048 (Rev. A)	*Cooling Assembly, DD13, GHG17*	
50	T151685	Hose, 1'' ID	2
51	W16-010X000-G2	WSH, Lock, SPLT M10 D127B, ST Z	4
52	W16-80MX000-G2	WSH, Lock, SPLT M8 D127B, ST Z	2
53	WAH-50NX000-Y2	WSH, FL HRD A-NRW 0.50, ST YZ	2
54	WBR-31RX875-20	WSH, FL TYPB-REG 0.3125, ST Z	2
55	WMF-010X000-20	WSH, Flat M10 DIN125, ST SQC	4
56	WMF-60MX000-20	WSH, Flat M6 DIN125, ST Z	2
57*	WMF-80MX000-20	WSH, Flat M8 DIN125, ST Z	2

* ITEM NOT SHOWN IN ILLUSTRATION

WHEN ORDERING PARTS, SPECIFY MODEL NUMBER, SERIAL NUMBER AND DESCRIPTION OF PARTS REQUIRED

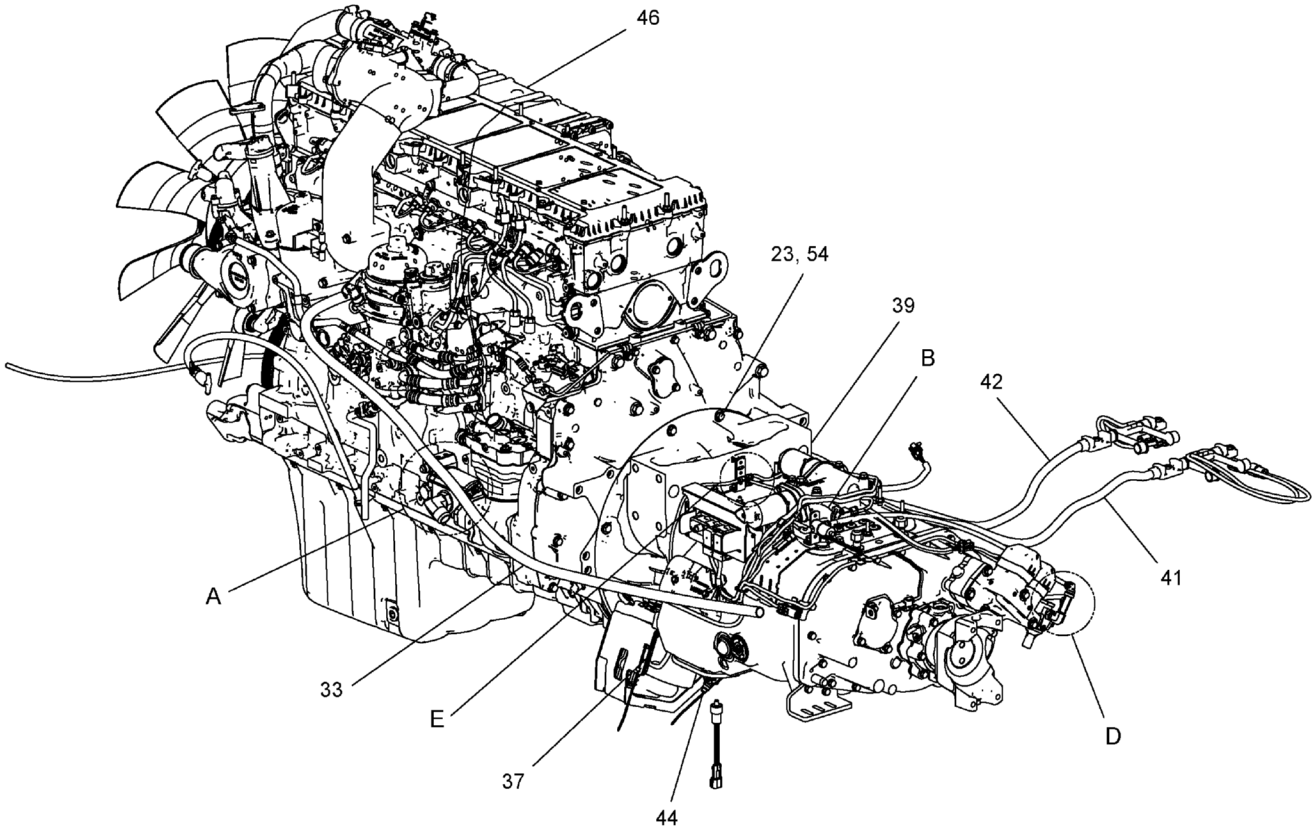
46
23, 54
39
B
42
41
A
33
E
37
44
D

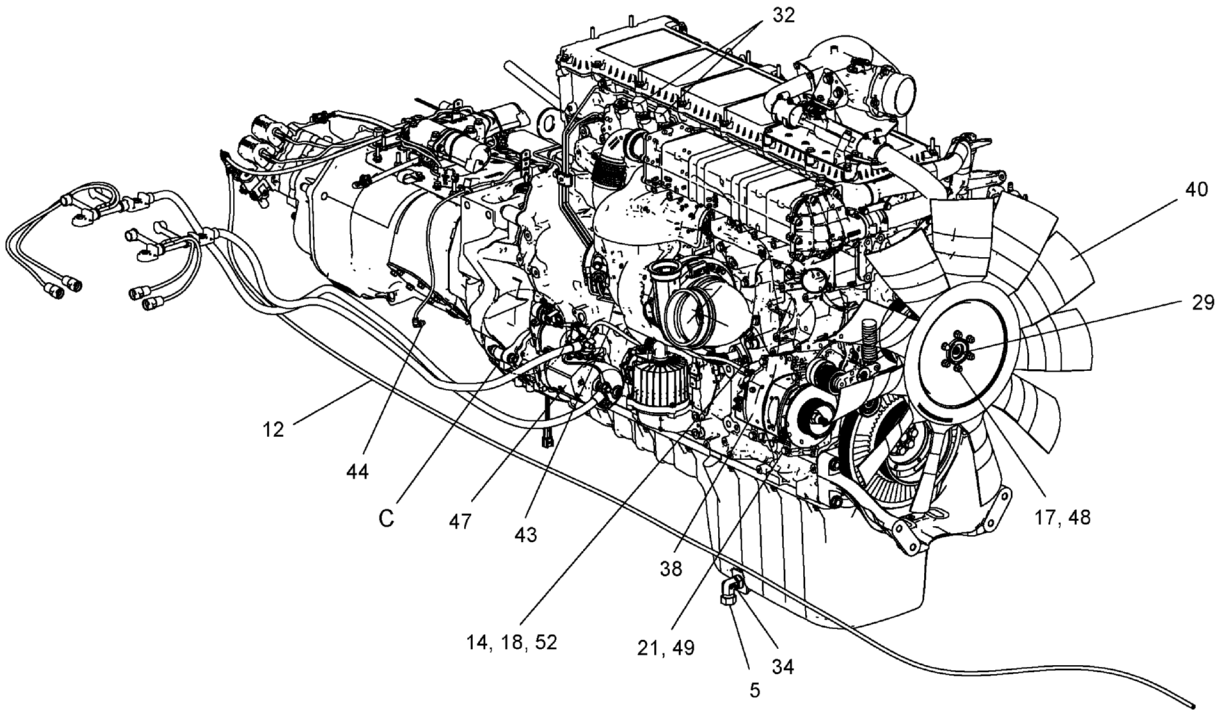
32
40
29
12
44
C
47
43
38
17, 48
14, 18, 52
21, 49
34
5

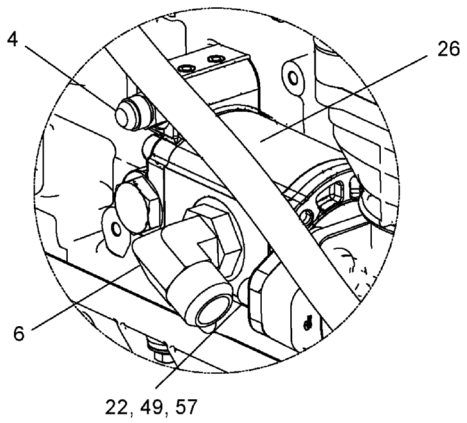

DETAIL A

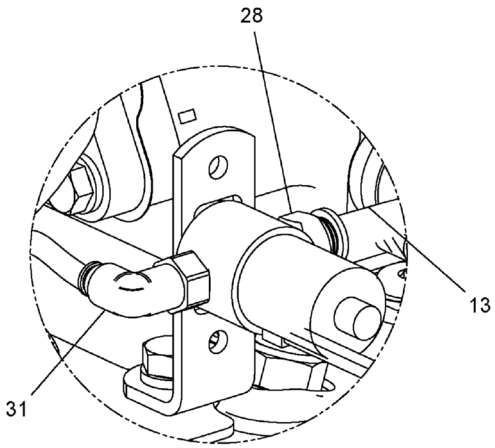

DETAIL B

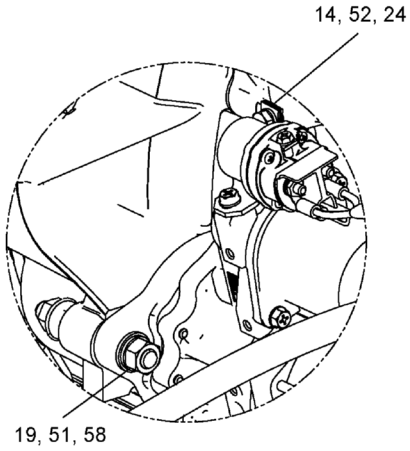

DETAIL C

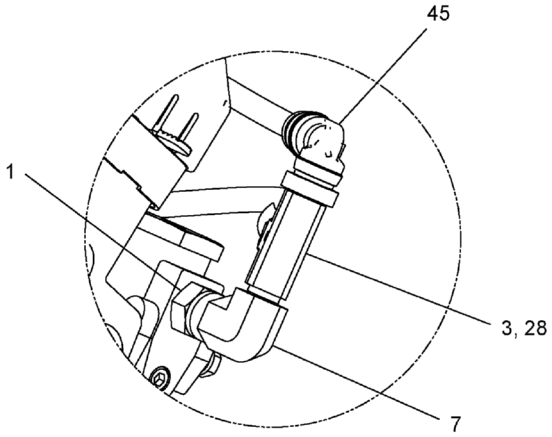

DETAIL D

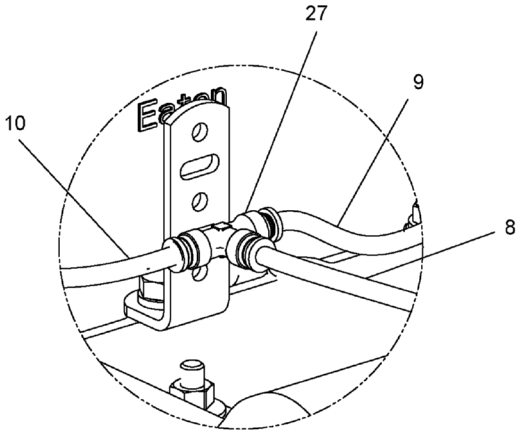

DETAIL E

REF	PART NO.	DESCRIPTION	QTY
	T148360 (Rev. A)	*T5/T7 Engine GP-DD13 GHG17*	
1	12019-461	Adapter, MNPT-6/MNPT-4	1
2*	1217-316	Pilot Bearing	1
3	1219-516	Tee, FNPT-4/FNPT-4/FNPT-4	1
4	1219-598	Adapter, MORB-6/MJIC-8	1
5	1219-638	Cap, FJIC-12	1
6	1219-680	Elbow, 90, MJIC-16/MORB-16	1
7	1219-848	Adapter, 1/4" NPT	1
8	12202-16	Tubing, -4, Black, 16" LG.	1
9	12202-22	Tubing, -4, Black, 22" LG.	1
10	12202-25	Tubing, -4, Black, 25" LG	1
11*	12202-53	Tube, 1/4 INCH Black	1
12	12203-150	Tubing, -6, Black, 150" LG.	1
13	12203-24	Tubing, -6, Black, 24" LG.	1
14	1240-38	Clamp ARDE #COV-0811	2
15*	200B2007-3	Clamp - Medium Duty	1
16*	717-0803-14	Grease Hose - 14" LG	1
17	N04-375F000-25	Nut, HEX 0.375-24, ST Z GR5	6
18	N24-08BM000-28	Nut, HEX M8-1.25, DIN934, STZ CL	1
19	N24-12CM000-28	Nut, HEX M12-1.5, DIN934, STZ CL	3
20*	S01-375CB50-Y8	SCR, HHCS 0.375-16 X 2.50, ST YZ G8	8
21	S07-10CM100-28	SCR, HHCS M10-1.5 X 100 PT, ST Z 8.8	4
22	S43-10CM030-43	SCR, SHCS M10 X 1.5 X 30, STZ 12.9	2
23	SHF-438CA75-Y8	SCR, HHCS FT 0.438-14 X 1.75, STYZG8	12
24	SMF-08BM016-28	SCR, HHCS M8-1.25 X 16 FT, ST Z 8.8	2
25*	SMF-12CM045-28	SCR, HHCS M12-1.5 X 45 FT, ST Z 8.8	4
26	T114999	Pump, Gear	1
27	T116558	Tee, PTC, -4 Tube	1
28	T116916	Adapter, Male, -6 Tube, -4 Pipe	2
29	T116938	Drive, Fan	1
30*	T116939	Valve, Fan Drive Solenoid	1
31	T118090	Elbow, 90, MNPT-4SW/PTC-4	1
32	T119677	Elbow, BARB To Metric	2
33	T121442	Block Heater ASSY, 120V	1
34	T121448	Elbow, 90, MJIC-12/MM27-2	1
35*	T122610	Elbow, 90, MNPT-2/PTC-4	1
36*	T126166	Clutch	1
37	T127504	Bracket	1
38	T133386	Alternator, 12V	1
39	T134131	Transmission, Eaton	1
40	T135292	Cooling Fan	1
41	T139022	Cable, 2-Battery, Negative	1
42	T139023	Cable, 2-Battery, Positive	1
43	T139196-30	Alternator Cable, Positive	1
44	T145513	Elbow, 90°, PTC-4-2	2
45	T145514	Elbow, 90°, PTC-6-4	1
46	T148338	Engine, DD13, GHG17, D471.942, 470BHP/1650LBFT	1
47	T150268	Starter, 12V, 11 Tooth, 3.175P	1
48	W07-375X000-20	Washer Lock 3/8 MED	6
49	W16-010X000-GP	WSH, Lock, SPLT M10 D127B, STL	6

* ITEM NOT SHOWN IN ILLUSTRATION

WHEN ORDERING PARTS, SPECIFY MODEL NUMBER, SERIAL NUMBER AND DESCRIPTION OF PARTS REQUIRED

REF	PART NO.	DESCRIPTION	QTY
	T148360 (Rev. A)	*T5/T7 Engine GP-DD13 GHG17*	
50*	W16-012X000-G2	WSH, Lock, SPLT M12 D127B, ST Z	4
51	W16-012X000-GP	WSH, Lock, SPLT M12 D127B, STL	3
52	W16-80MX000-G2	WSH, Lock, SPLT M8 D127B, ST Z	3
53*	WAH-37NX000-Y2	WSH, FL HRD A-NRW 0.375, ST YZ	8
54	WAH-43NX000-Y2	WSH, FL HRD A-NRW 0.4375, ST YZ	12
55*	WMF-012X000-20	WSH, Flat M12 DIN125, ST Z	4
56*	WMF-80MX000-20	WSH, Flat M8 DIN125, ST Z	1
57	WMH-010X000-Y2	WSH, Flat, Hard M10 D125, ST YZ	2
58	WMH-012X000-Y2	WSH, Flat, Hard M12 D125, ST YZ	3

* ITEM NOT SHOWN IN ILLUSTRATION

WHEN ORDERING PARTS, SPECIFY MODEL NUMBER, SERIAL NUMBER AND DESCRIPTION OF PARTS REQUIRED

REF	PART NO.	DESCRIPTION	QTY
	480-126-2017-WHEEL & TIRE* (Rev. 00)	*480-126-2017 Wheel & Tire*	
1	**718A0630**	Front Wheel & Tire ASSY (445/65R22.5) (see page 415)	1
2	**718A0608**	Rear Wheel & Tire ASSY (315/80R22.5) (see page 416)	1
2A	**T106174**	Rear Wheel & Tire ASSY (315/80R22.5 Tread XDY3) (see page 417)	1

* NOT PURCHASABLE AT THIS LEVEL

WHEN ORDERING PARTS, SPECIFY MODEL NUMBER, SERIAL NUMBER AND DESCRIPTION OF PARTS REQUIRED

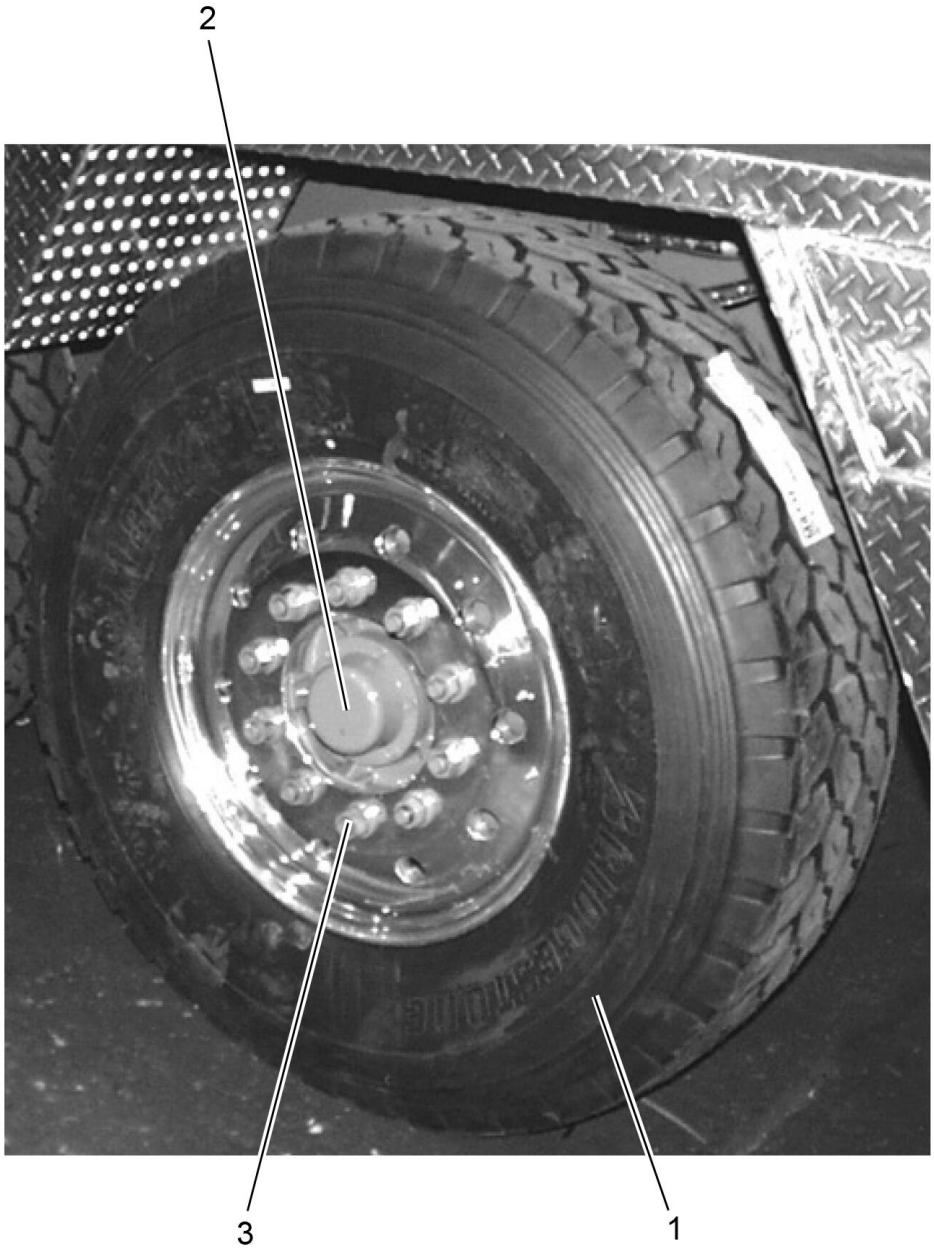

REF	PART NO.	DESCRIPTION	QTY
	718A0630 (Rev. 00)	*Front Wheel & Tire ASSY (445/65R22.5)*	
1	718A0627	Wheel & Tire Assembly, 445/65R22.5	4
1.1	718 0628	Wheel, Front	1
1.2	718 0629	Tire, Front, 445/65R22.5	1
2	714 0833	Cover, Hub Front	4
3	1222-356	Lug Nut Cover	40

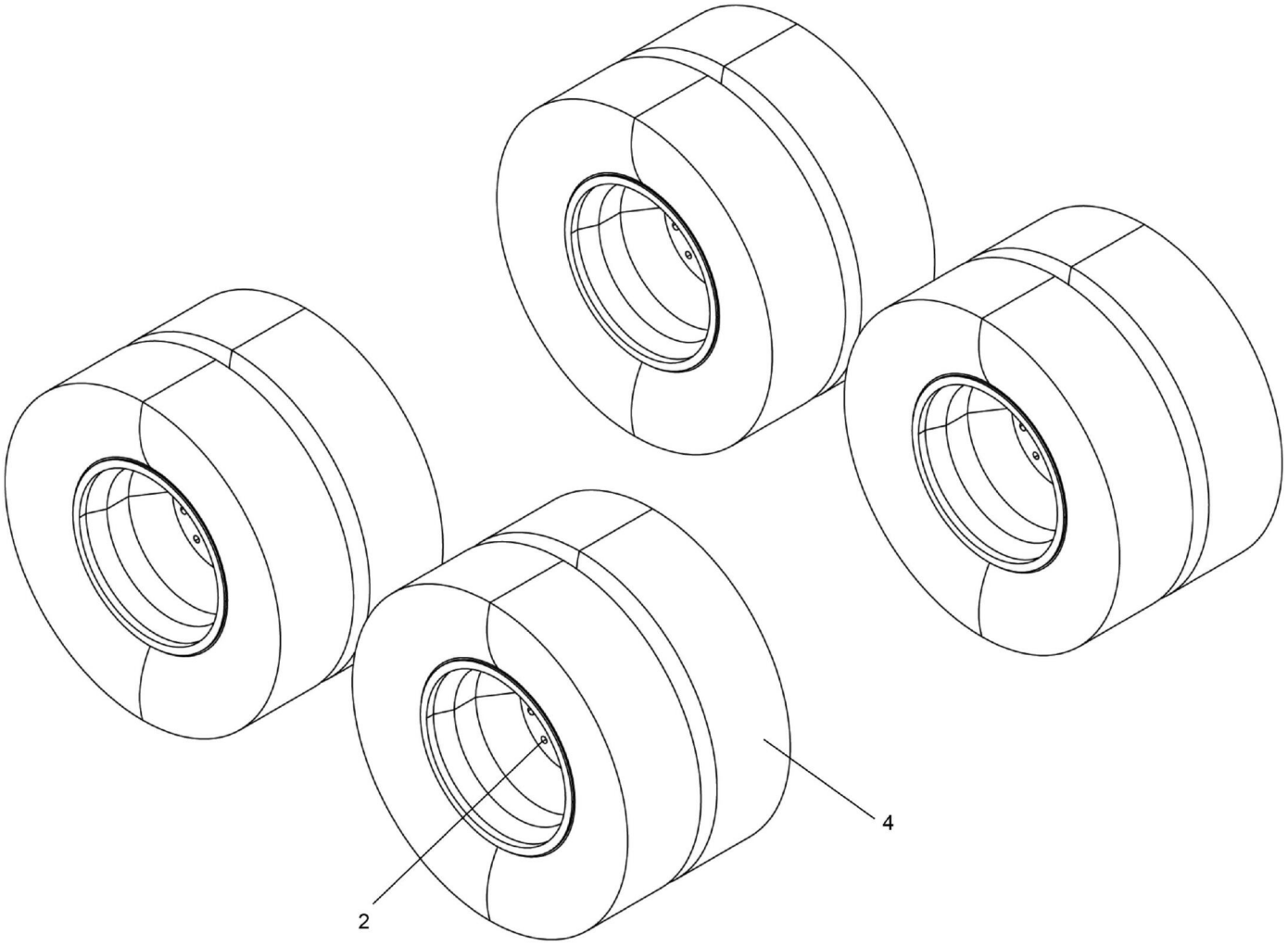

REF	PART NO.	DESCRIPTION	QTY
	718A0608 (Rev. A)	*Rear Wheel & Tire ASSY (315/80R22.5)*	
1*	32166	Extension, Valve Stem	4
2	1222-356	Lug Nut Cover	40
3*	714-1265	Cover, Hub Rear	4
4	718A0611	Wheel & Tire Assembly, 315/80R22.5	8
4.1	718 0606	Tire	1
4.2	718 0610	Wheel	1

* ITEM NOT SHOWN IN ILLUSTRATION

WHEN ORDERING PARTS, SPECIFY MODEL NUMBER, SERIAL NUMBER AND DESCRIPTION OF PARTS REQUIRED

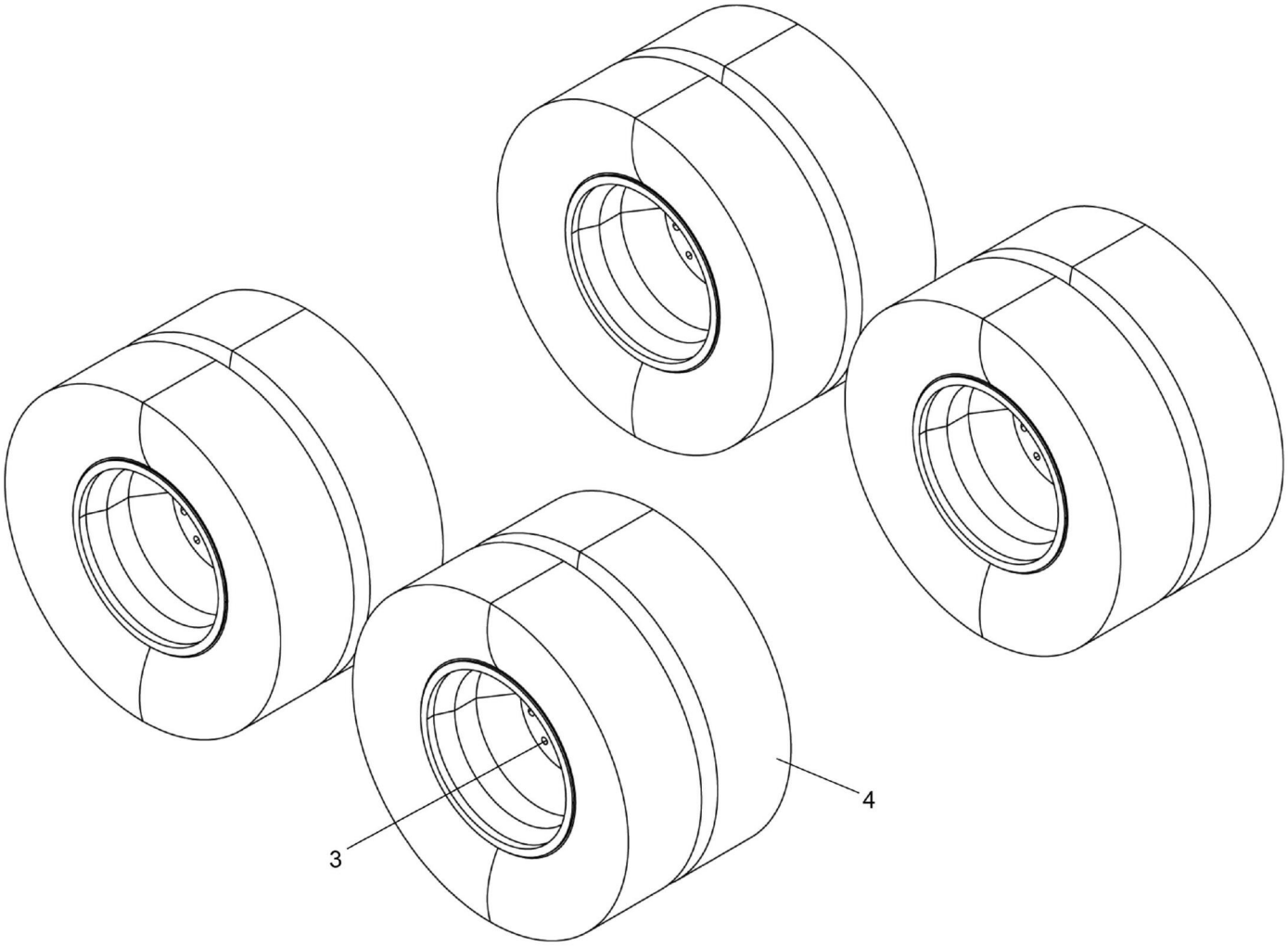

REF	PART NO.	DESCRIPTION	QTY
	T106174 (Rev. A)	*Rear Wheel & Tire ASSY (315/80R22.5 Tread XDY3)*	
1*	714-1265	Cover, Hub Rear	4
2*	32166	Extension, Valve Stem	4
3	1222-356	Lug Nut Cover	40
4	**T106175**	Wheel & Tire ASSY (Inside) (see page 418)	8

* ITEM NOT SHOWN IN ILLUSTRATION

WHEN ORDERING PARTS, SPECIFY MODEL NUMBER, SERIAL NUMBER AND DESCRIPTION OF PARTS REQUIRED

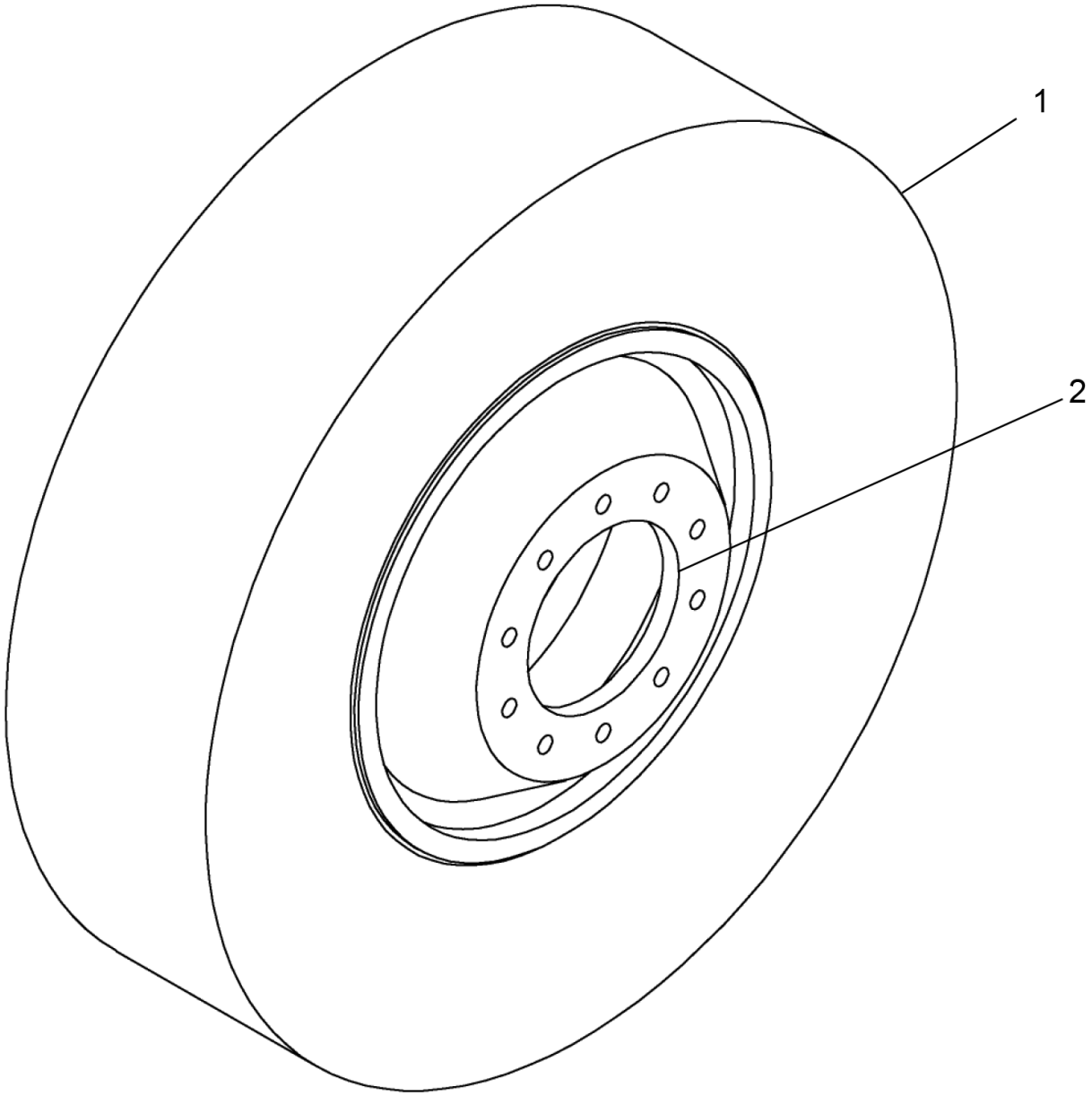

REF	PART NO.	DESCRIPTION	QTY
	T106175 (Rev. A)	*Wheel & Tire ASSY (Inside)*	
1	T106176	Tire	1
2	718 0610	Wheel	1

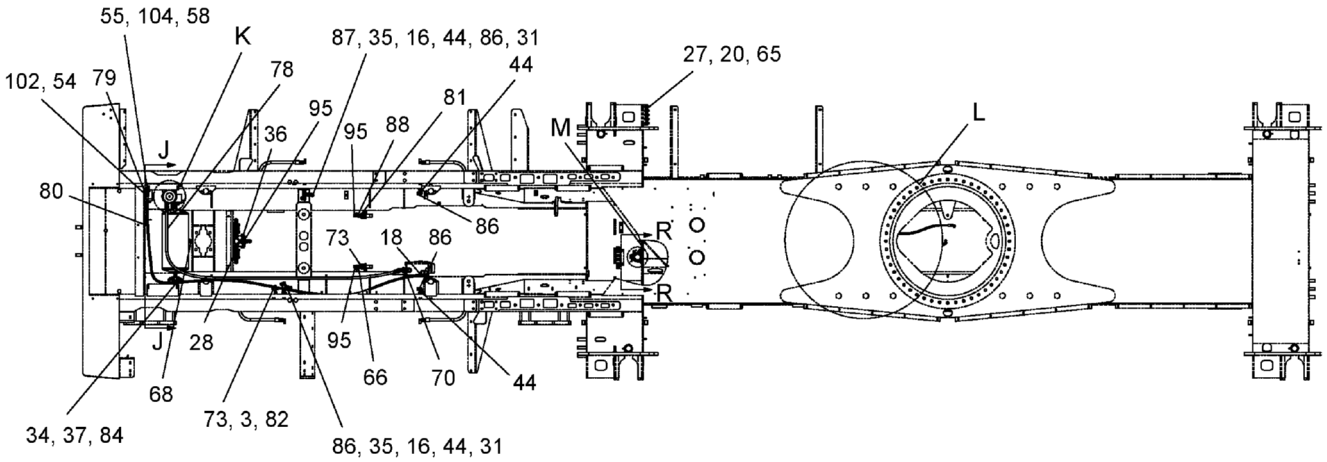

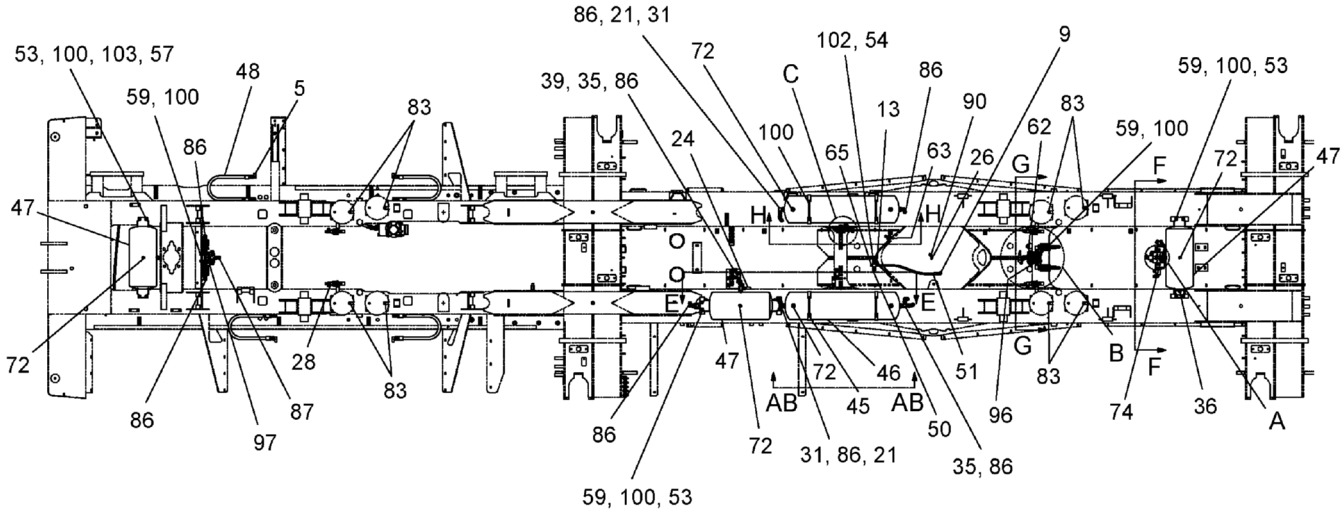

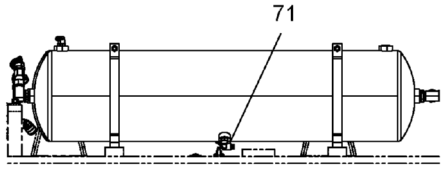

VIEW AB - AB

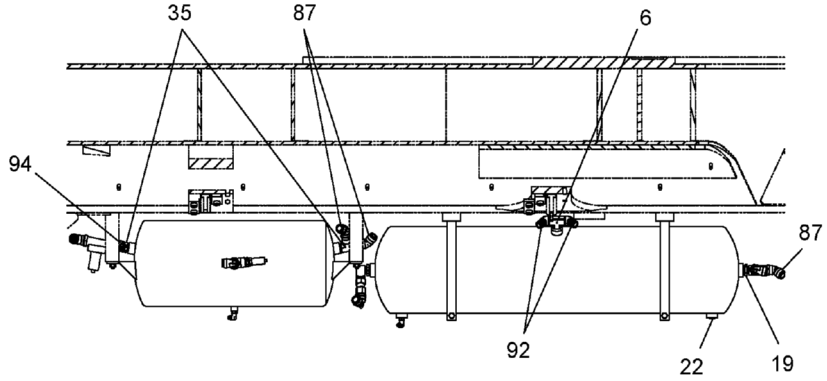

SECTION E - E

WHEN ORDERING PARTS, SPECIFY MODEL NUMBER, SERIAL NUMBER AND DESCRIPTION OF PARTS REQUIRED

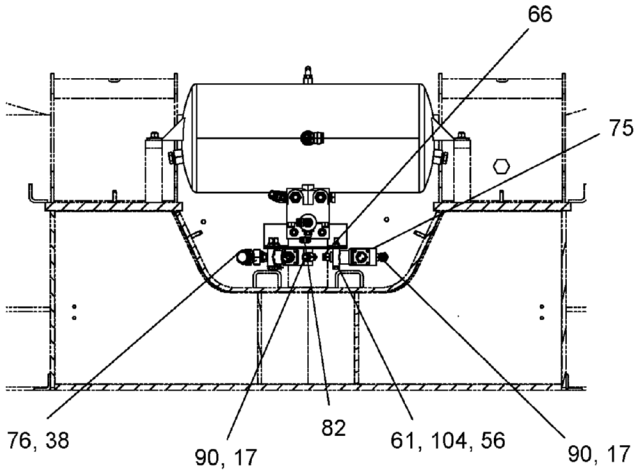

SECTION F - F

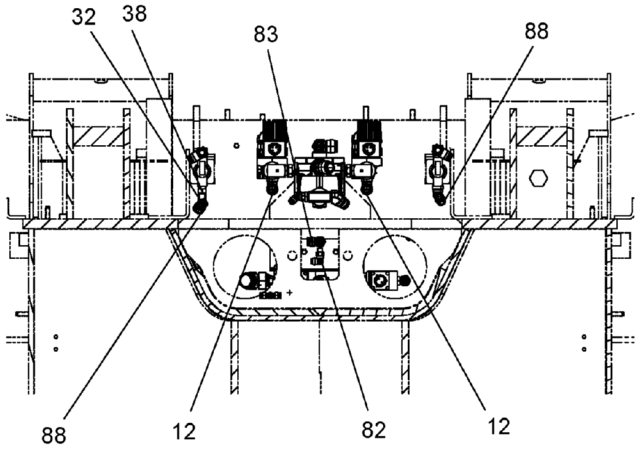

SECTION G - G

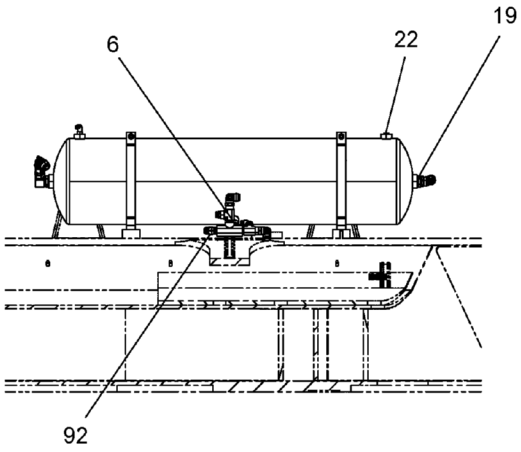

SECTION H - H

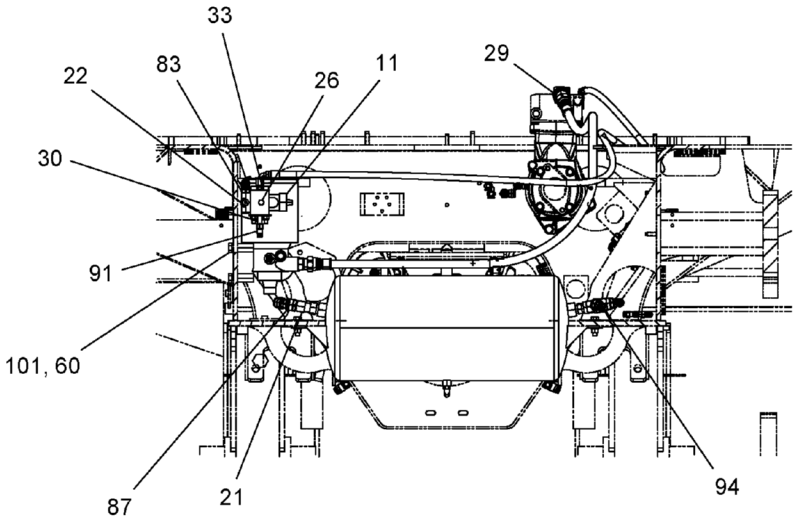

SECTION J - J

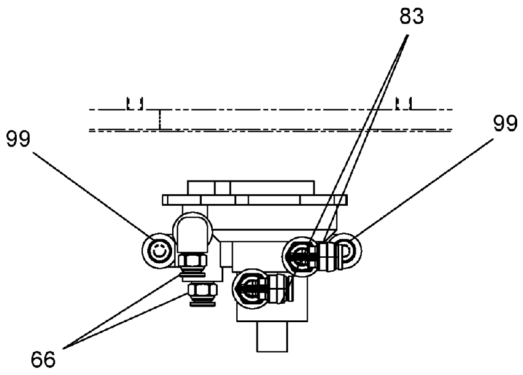

SECTION R - R

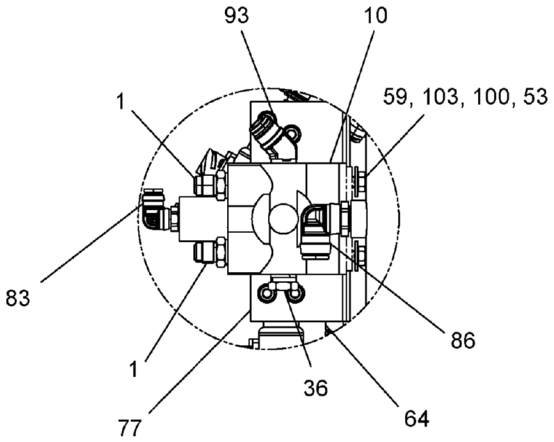

DETAIL A

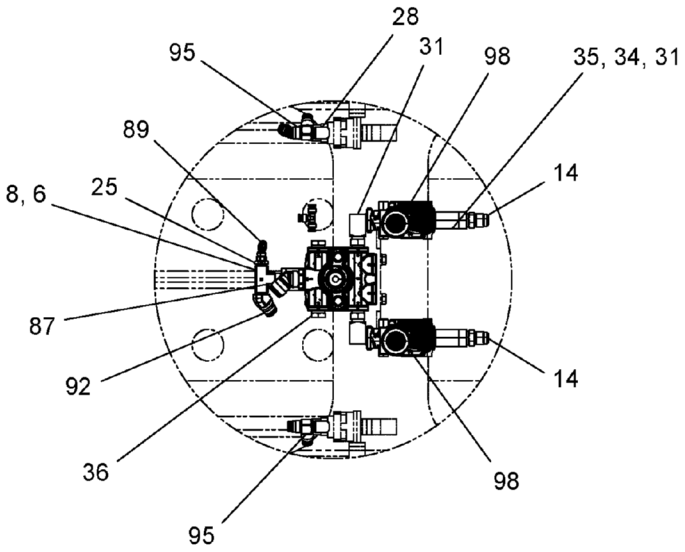

DETAIL B

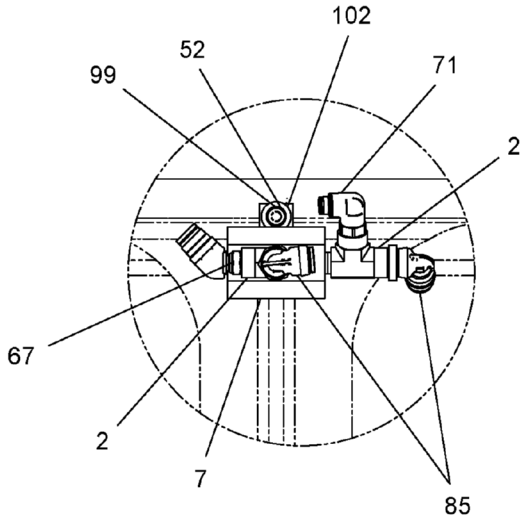

DETAIL C

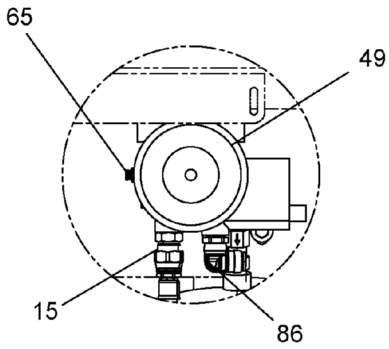

DETAIL K

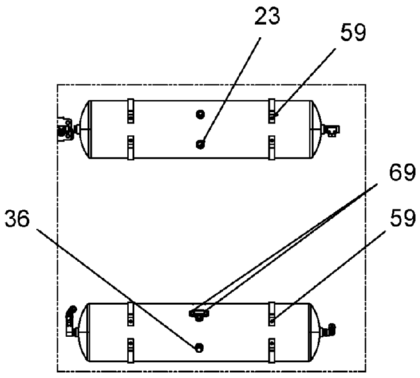

DETAIL L

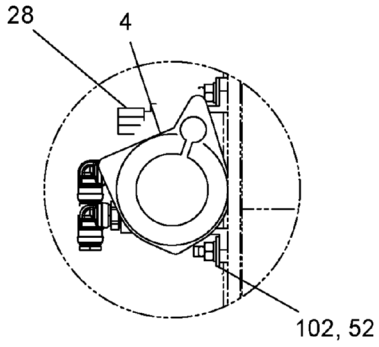

DETAIL M

REF	PART NO.	DESCRIPTION	QTY
	T153911 (Rev. A)	*Air Components Assembly, 2017*	
1	12019-191	Adapter 1/2"M SAE 1/2"M NPT	2
2	12019-235	Tee, Run FNPT-6/MNPT-6/FNPT-6	2
3	12019-300	Cross	1
4	12019-306	Valve	1
5	12019-314	Elbow 5/8"M SAE 3/8"M NPT	4
6	12019-315	Tee	3
7	12019-317	Air Valve, WM-80	1
8	12019-461	Adapter, MNPT-6/MNPT-4	1
9	12019-53	Adapter	1
10	12019-533	Valve Relay R-14	1
11	12019-543	Governor, Air	1
12	12019-58	Elbow 5/8"M SAE 1/2"M NPT	2
13	12019-60	Adapter	1
14	12019-64	Adapter	2
15	12019-697	Adapter	1
16	12019-705	Elbow	2
17	12019-843	Elbow, Female Pipe, 1/8-27 NPTF	2
18	12019-892	Elbow, 90, MJIC-4/MM10X1.5	1
19	12019-90	Adapter, MNPT-12/FNPT-8	4
20	12019-905	Adapter, BH, FNPT-4/FNPT-4	5
21	12019-96	Valve, Air, FNPT-8/CHECK/MNPT-8	3
22	1219-120	Plug, NPT-4	4
23	1219-191	Nipple	2
24	1219-213	Valve, Relief	1
25	1219-214	Adapter, MNPT-6/FNPT-4	1
26	1219-215	Plug, NPT-2, HEX	2
27	1219-217	Drain, MNPT-4	5
28	1219-29	Elbow, 90°, MNPTF-4/FNPTF-4	6
29	1219-290	Elbow, 45, MJIC-12/FJIC-12SW	1
30	1219-31	1.5 Long 1/8 Nipple	1
31	1219-333	Elbow, 90, MNPT-8/FNPT-8	8
32	1219-516	Tee, FNPT-4/FNPT-4/FNPT-4	1
33	1219-685	Adapter, MJIC-4/MNPT-2	1
34	1219-816	Adapter, MNPT-8/MNPT-8	3
35	1219-850	Tee, MNPT-8/FNPT-8/FNPT-8	8
36	1219-9	Plug, MNPT-8	8
37	1219-939	Cross, -8	1
38	1219-954	Adapter, MNPT-4/MNPT-4	2
39	1219-97	Adapter, MNPT-8/FNPT-6	1
40*	12202-1	Tubing, -4, Black	74.56"
41*	12203-1	3/8" PFT-6B Black Tube	93.18"
42*	12204-1	Tubing, 1/2", Black	50.27"
43*	12205-1	Tubing, -10, Black	54.72"
44	362-3648	Adapter, BH, FNPT-8/FNPT-8	4
45	44371	Bracket	4
46	48023	Tank, Air	2
47	52239	Tank, Air	3
48	707A7485	Hose	4
49	712-0510	Air Dryer	1

* ITEM NOT SHOWN IN INSTALLATION

WHEN ORDERING PARTS, SPECIFY MODEL NUMBER, SERIAL NUMBER AND DESCRIPTION OF PARTS REQUIRED

REF	PART NO.	DESCRIPTION	QTY
	T153911 (Rev. A)	*Air Components Assembly, 2017*	
50	A32569-1	Block	1
51	A52578	Hose Assembly	1
52	N04-312C000-25	Nut, HEX 0.3125-18, ST Z GR5	3
53	N04-375C000-25	Nut, HEX 0.375- 16, ST Z GR5	14
54	NYL-312C000-25	Nut, HEX NYL-INS 0.312-18, ST SQC G5	3
55	NYM-08BM000-41	Nut, NYL-INS M8-1.25, STZ C8	2
56	NYM-08BM000-Y8	HEX Nut, Nylon Insert Metric	4
57	S01-375CA50-25	SCR, HHCS 0.375-16 X 1.50, ST Z GR5	4
58	S43-08BM080-43	SCR, SHCS M8 X 1.25 X 80, STZ 12.9	2
59	SHF-375CA00-25	HHCS 3/8 NC X 1 GR5 Zinc	22
60	SHF-500CA25-25	SCR, HHCS FT 0.50-13 X 1.25, ST Z G5	3
61	SMF-08BM065-28	SCR, HHCS M8-1.25 X 65 FT, ST Z 8.8	4
62	T116558	Tee, PTC, -4 Tube	1
63	T116559	TEE, PTC	1
64	T116562	Elbow, 90, MNPT-4/PTC-6	2
65	T116914	Adapter, MNPT-4/PTC-4	7
66	T116916	Adapter, Male, -6 Tube, -4 Pipe	4
67	T116917	Adapter, MNPT-6/PTC-6	1
68	T116918	Adapter, Male, -6 Tube -8 Pipe	1
69	T116920	Adapter, Male, -8 Tube -6 Pipe	2
70	T117327	Adapter, MJIC-12/MM26 X 1.5ED	1
71	T118088	Elbow, 90°, PTC-6-6	2
72	T118090	Elbow, 90, MNPT-4SW/PTC-4	5
73	T120964	Adapter, MNPT-2/PTC-4	4
74	T122609	Tee, PTC-6/PTC-6/MNPT-4	1
75	T126380	Valve, ATC Solenoid	2
76	T126381	Valve, Pressure Reducing	1
77	T134753	Bracket	1
78	T135086	Hose, Air Dryer	1
79	T137760	Bracket	1
80	T138062	Hose, -4, FJIC-4SW/FJIC-4SW	1
81	T138165	Elbow, 45, MNPT-2/PTC-4	1
82	T145513	Elbow, 90°, PTC-4-2	3
83	T145514	Elbow, 90°, PTC-6-4	13
84	T145515	Elbow, 90, MNPT-8 PTC-6	1
85	T145516	Elbow, 90°, PTC-8-6	2
86	T145518	Elbow, 90, MNPT-8/PTC-10	15
87	T145519	Elbow, 45, MNPT-8, PTC-10	7
88	T145520	Elbow, 45°, PTC-6-4	4
89	T145521	Elbow, 45, MNPT-4/PTC-4	1
90	T145522	Adapter, MNPT-2/PMT-6	3
91	T149746	Adapter, FNPT-2/PTC-4	1
92	T149765	Elbow, 45, MNPT-6/PTC-8	4
93	T149766	Elbow, 45, MNPT-8/PTC-8	1
94	T149768	Elbow 45°, PTC-6-8	3
95	T149769	Branch Tee, MNPT-4/PTC-6/PTC-6	5
96	T153910	Relay, Pneumatic, ABS, R14	1
97	T158512	Valve, Ram ASM, ABS Air Brake R12/M40HF	1
98	T158548	Valve, Pneumatic, ABS MOD, M40HF	2

* ITEM NOT SHOWN IN INSTALLATION

WHEN ORDERING PARTS, SPECIFY MODEL NUMBER, SERIAL NUMBER AND DESCRIPTION OF PARTS REQUIRED

REF	PART NO.	DESCRIPTION	QTY
	T153911 (Rev. A)	*Air Components Assembly, 2017*	
99	W07-312X000-20	WSH, LCK, MED SPLT 0.3125, ST SQC	3
100	W07-375X000-20	Washer Lock 3/8 MED	26
101	W07-500X000-20	WSH, LCK, MED SPLT 0.50, ST SQC	3
102	WAW-31WX000-20	WSH, FL TYPA-WID 0.3125, ST SQC	6
103	WAW-37WX000-20	WSH, FL TYPA-WID 0.375, ST Z	6
104	WMF-80MX000-20	WSH, Flat M8 DIN125, ST Z	12

* ITEM NOT SHOWN IN INSTALLATION

WHEN ORDERING PARTS, SPECIFY MODEL NUMBER, SERIAL NUMBER AND DESCRIPTION OF PARTS REQUIRED

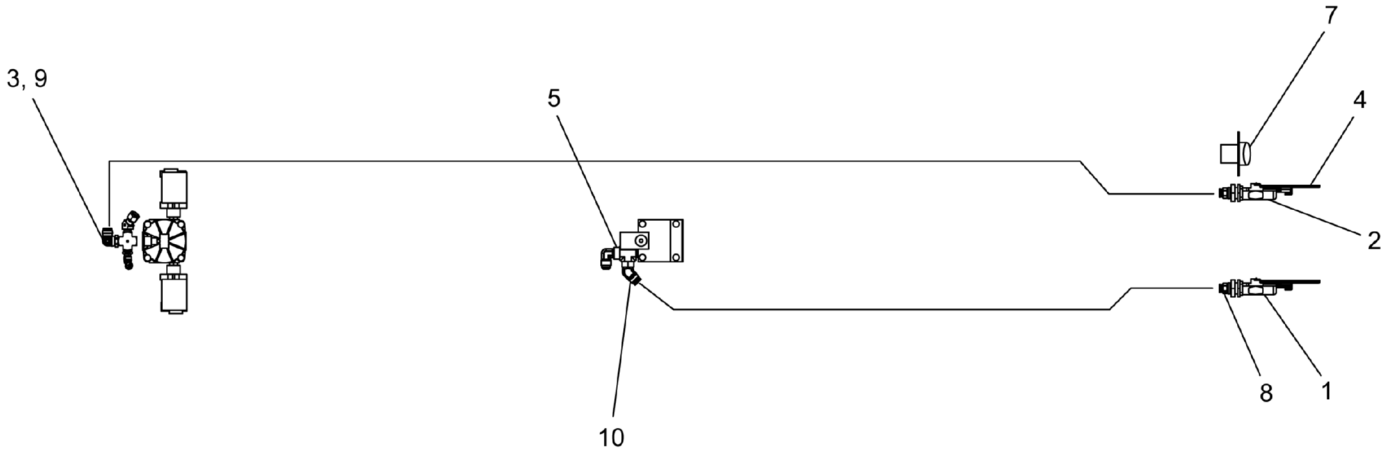
3, 9
5
7
4
2
8
1
10

REF	PART NO.	DESCRIPTION	QTY
	T103931-2 (Rev. B)	*Air COMP. Boom DOLLY*	
1	12019-709	Glad Hand, Emergency	1
2	12019-710	Glad Hand, Service	1
3	12019-712	Cross 3/8"F NPT	1
4	12019-797	Dummy Coupling	2
5	1219-850	Tee, MNPT-8/FNPT-8/FNPT-8	1
6*	12204-1	Tubing, 1/2", Black	1
7	1223-926	7 Pin Connector	1
8	T116920	Adapter, Male, -8 Tube -6 Pipe	2
9	T145516	Elbow, 90°, PTC-8-6	1
10	T149766	Elbow, 45, MNPT-8/PTC-8	1

* ITEM NOT SHOWN IN ILLUSTRATION

WHEN ORDERING PARTS, SPECIFY MODEL NUMBER, SERIAL NUMBER AND DESCRIPTION OF PARTS REQUIRED

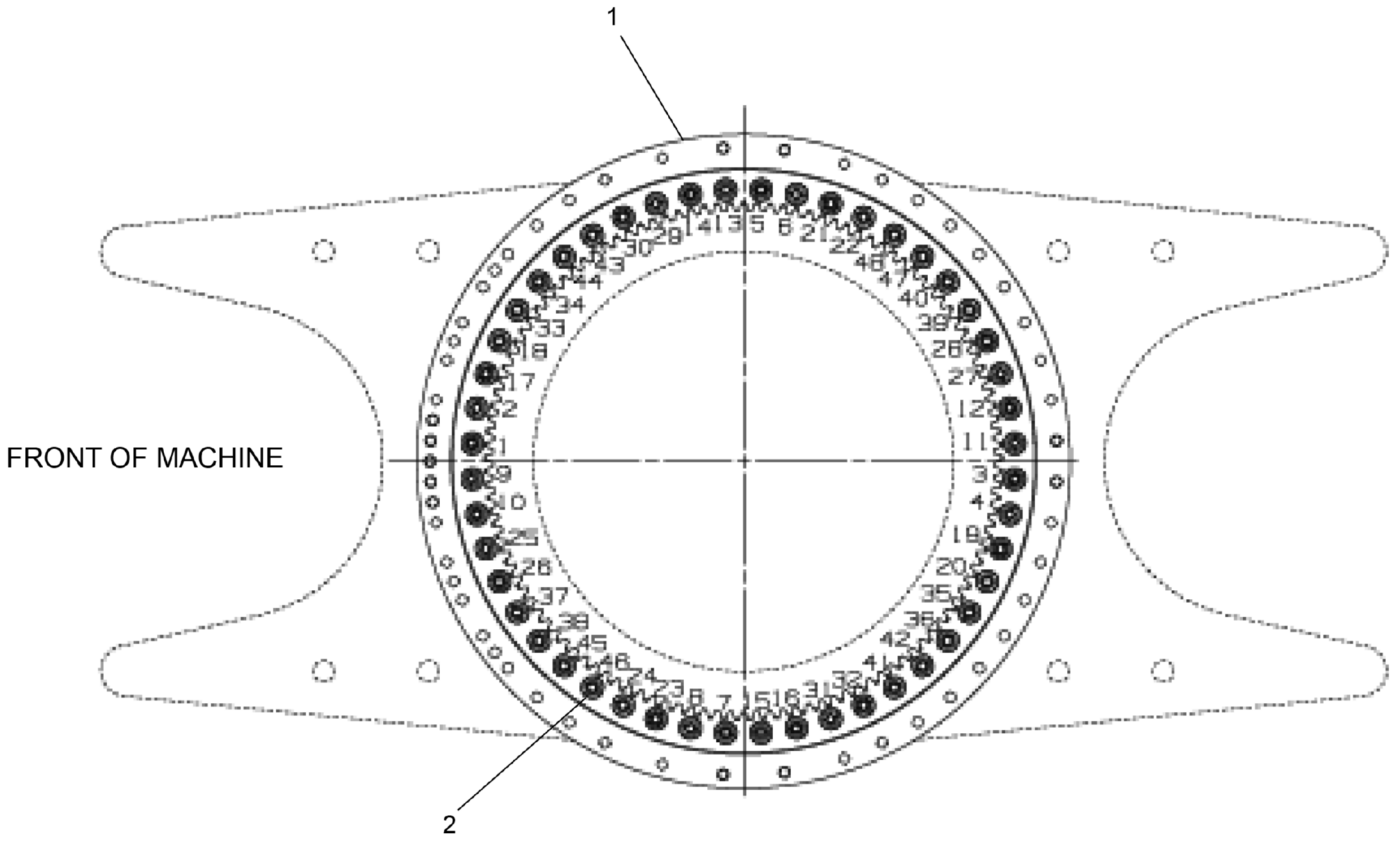

REF	PART NO.	DESCRIPTION	QTY
	718A0462 (Rev. C)	*Swing Bearing Assembly*	
1	718 0032	Bearing	1
2	**T146490**	Kit, Swing Bearing ASSY (see page 428)	1

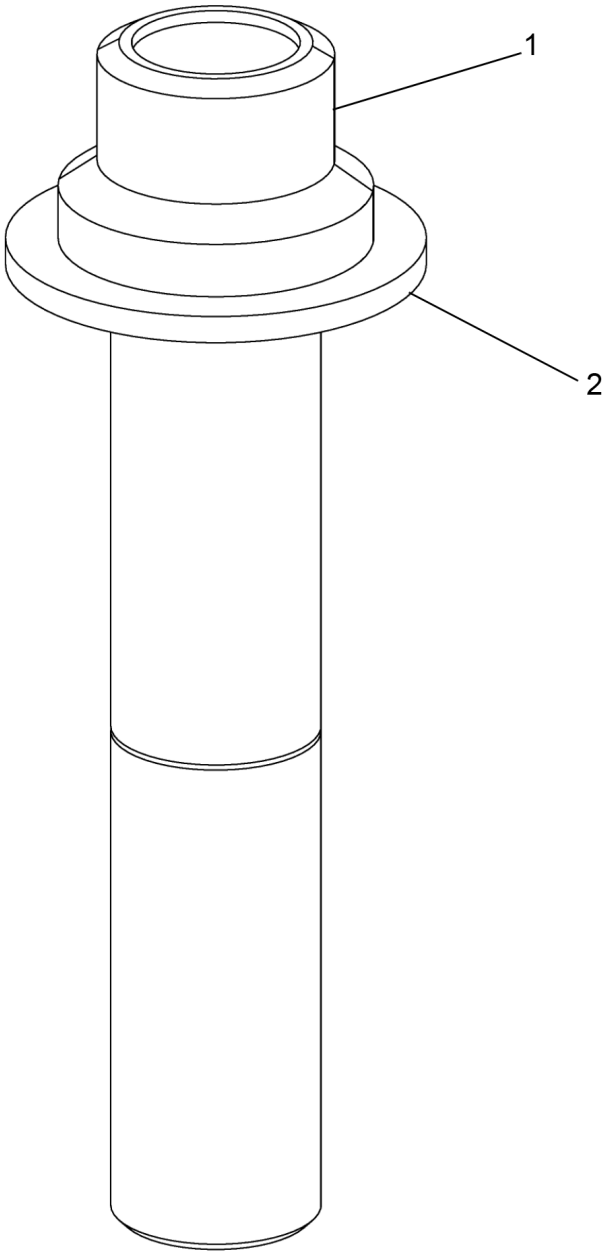

REF	PART NO.	DESCRIPTION	QTY
	T146490 (Rev. A)	*Kit, Swing Bearing ASSY*	
1	1203-284	1-8NC X 5.00 12 Point Flange Screw, 170KSI MIN	48
2	WAH-A0NX000-Y2	WSH, FL HRD A-NRW 1.00, ST YZ	48

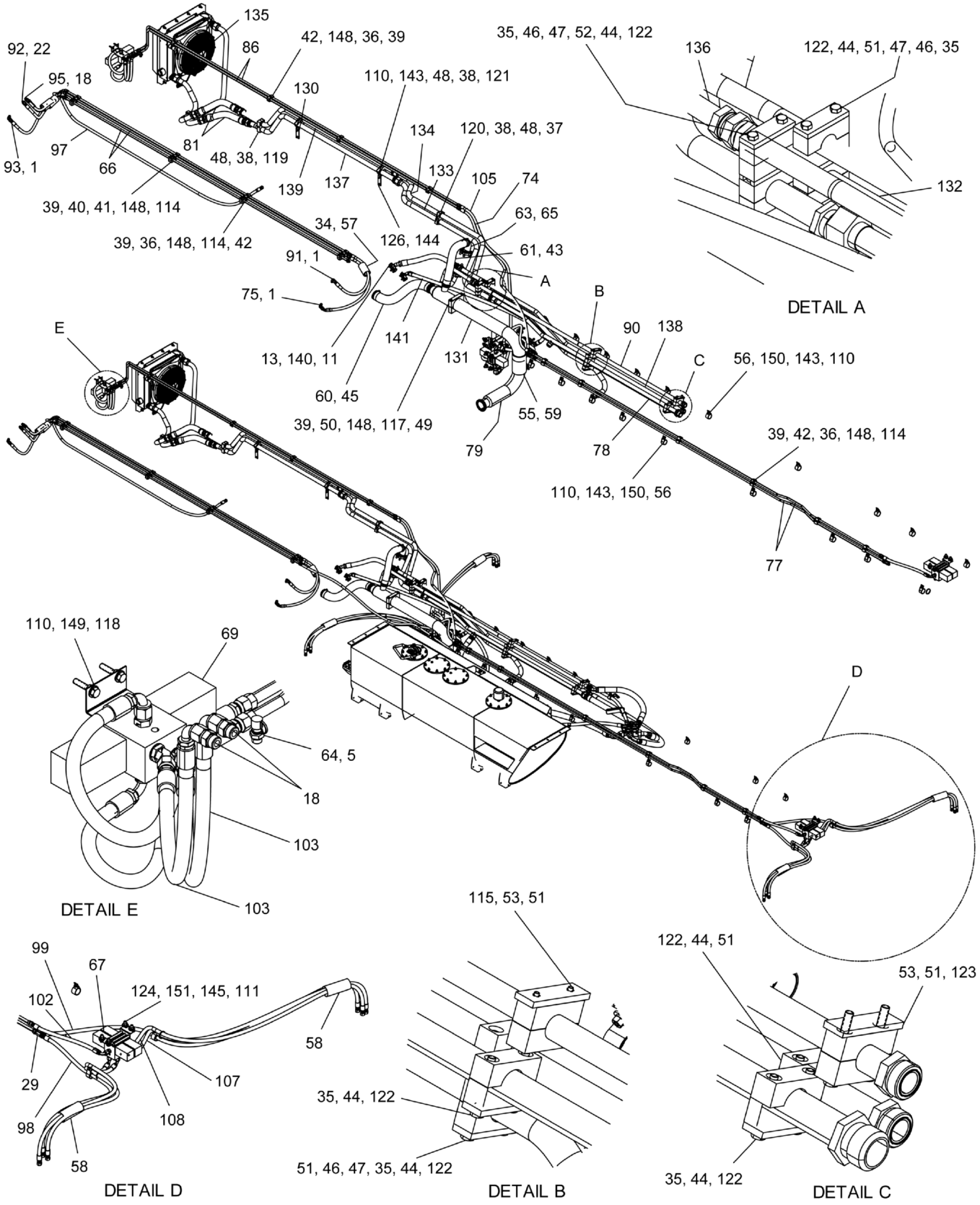

WHEN ORDERING PARTS, SPECIFY MODEL NUMBER, SERIAL NUMBER AND DESCRIPTION OF PARTS REQUIRED

LOAD KING BY CUSTOM TRUCK ONE SOURCE

LOWER HYDRAULIC ASSEMBLY (EXPORT & DOMESTIC)

DATE: Released 08-2018

MODEL: 480-126

PAGE: 429

CHAPTER 2

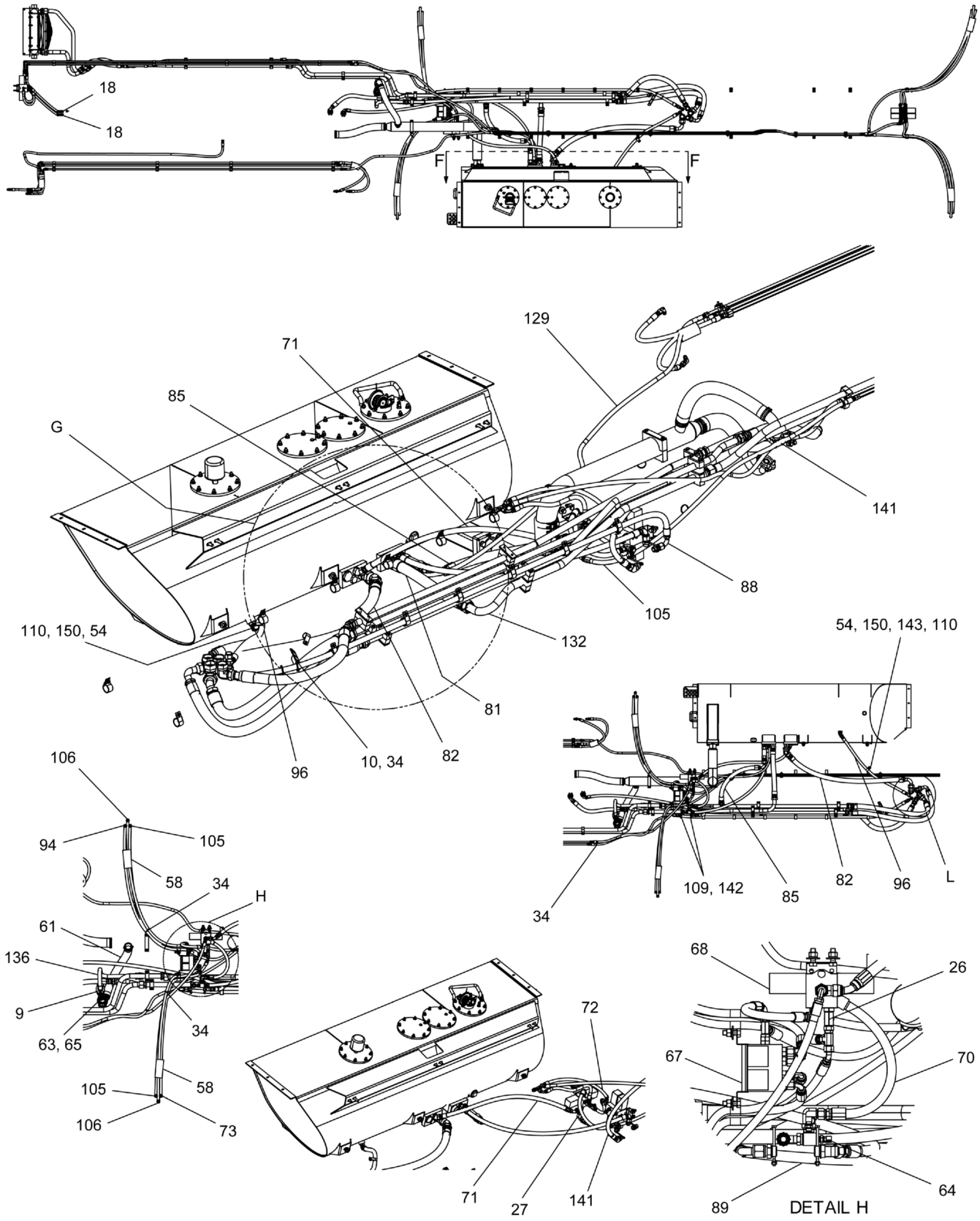

WHEN ORDERING PARTS, SPECIFY MODEL NUMBER, SERIAL NUMBER AND DESCRIPTION OF PARTS REQUIRED

LOAD KING BY CUSTOM TRUCK ONE SOURCE

LOWER HYDRAULIC ASSEMBLY (EXPORT & DOMESTIC)

DATE: Released 08-2018

MODEL: 480-126

PAGE: 430

CHAPTER 2

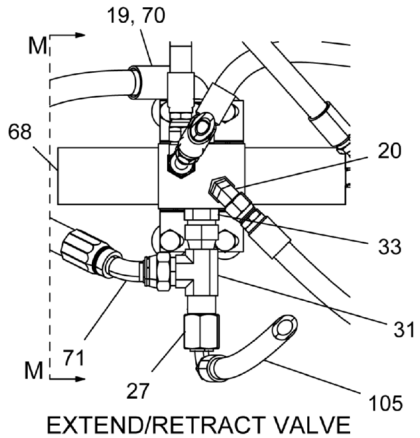

EXTEND/RETRACT VALVE
FRONT FACE OF VALVE

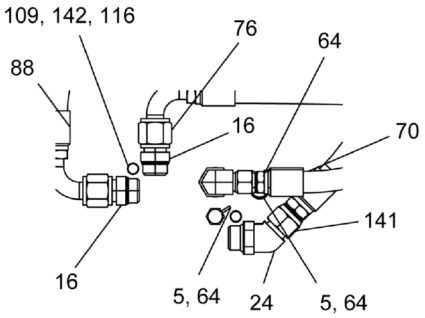

DIVERTER VALVE

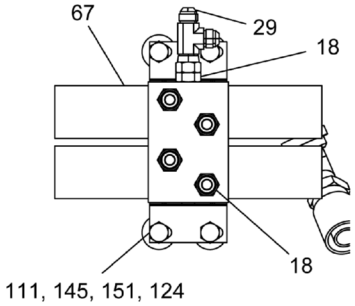

FRONT OUTRIGGER VALVE

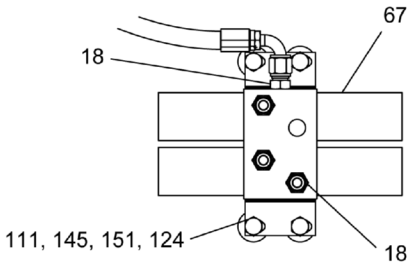

REAR OUTRIGGER VALVE

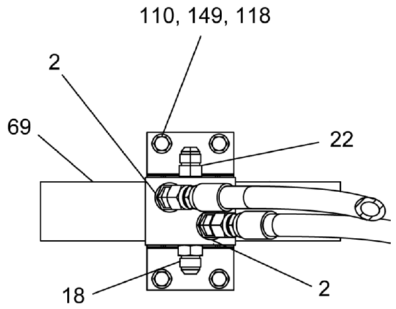

FRONT JACK VALVE
W/ CROSSOVER RELIEF

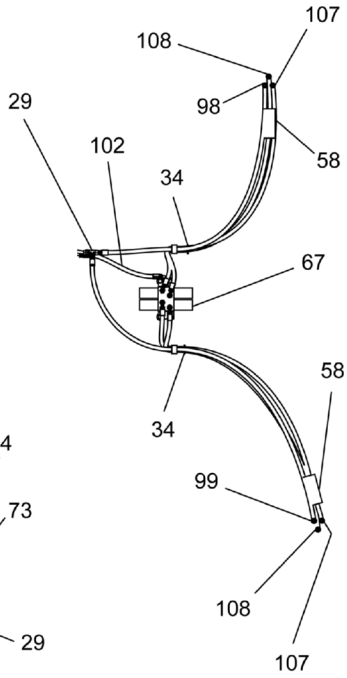

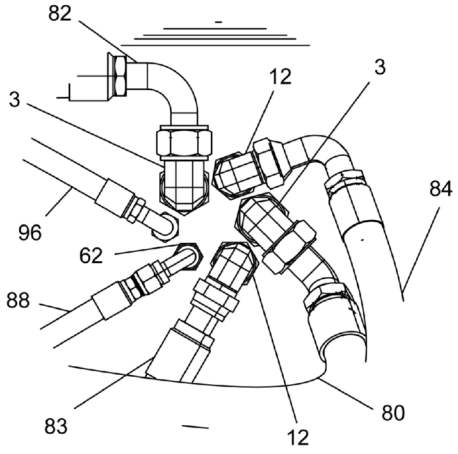

DETAIL L

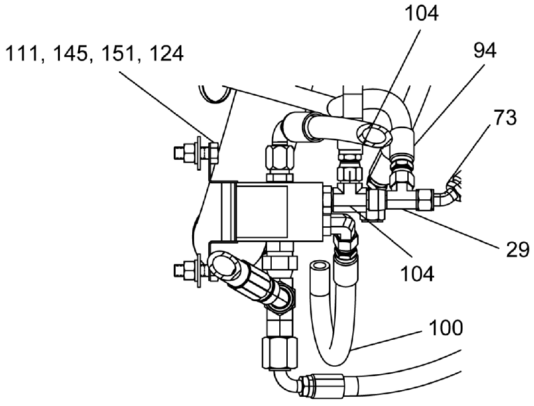

SECTION M-M

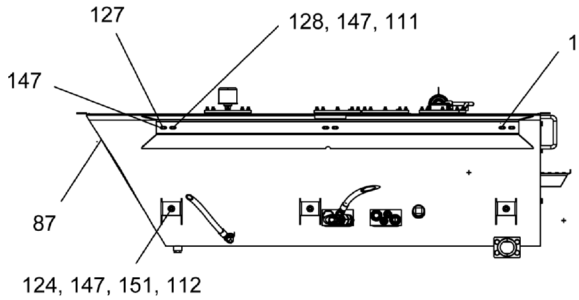

SECTION F-F

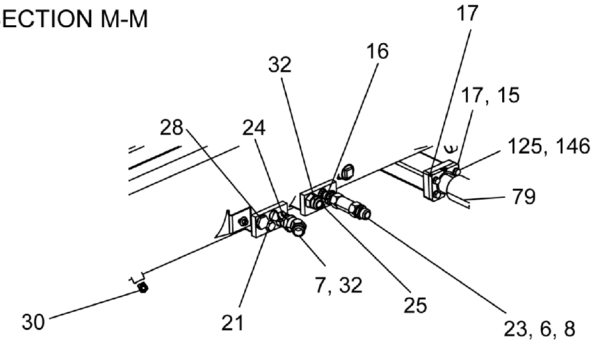

DETAIL G

WHEN ORDERING PARTS, SPECIFY MODEL NUMBER, SERIAL NUMBER AND DESCRIPTION OF PARTS REQUIRED

REF	PART NO.	DESCRIPTION	QTY
	T134320 (Rev. D)	*Lower Hydraulic ASSY T7*	
1	12019-274	Elbow, 90, MJIC-8/MORB-6	3
2	12019-447	Elbow, 45, MJIC-8/MORB-8	2
3	12019-503	Elbow, 90, FJIC-24SW/MJIC-24	2
4*	12019-517	Elbow, BLKHD, 90, MORB-12/MJIC-10	1
5	12019-558	Dust Cap, HQC-4	3
6	12019-736	Valve, FORB-20/CHECK-35/FORB-20	1
7	12019-739	Elbow, 45, MJIC-24/FJIC-24SW	1
8	12019-740	Adapter, STR, Oring/Oring	1
9	12019-742	Clamp, C62-20, Kit	1
10	12019-747	Miscellaneous Hose Shield	1
11	**12019-751**	Clamp, C61-16, Kit (see page 436)	1
12	12019-764	Elbow, 90°	2
13	12019-877	Clamp, C62-16, Kit	1
14*	1218-300	O-Ring-20 Faceseal	4
15	1218-61	O-Ring, SAE-48	1
16	1219-389	Adapter	3
17	1219-393	Clamp, Split Flange, C61-48	2
18	1219-441	Adapter, MJIC-8/MORB-8	15
19	1219-446	Adapter, MJIC-10/MORB-8	1
20	1219-470	Elbow, 90, MJIC-8/MORB-8	1
21	1219-485	Plug, ORB-12, HEX	1
22	1219-598	Adapter, MORB-6/MJIC-8	3
23	1219-661	Adapter, MJIC-20/MORB-20	1
24	1219-663	Elbow, 45, MJIC-12/MORB-12	2
25	1219-691	Adapter, MJIC-8/MORB-12	1
26	1219-695	Tee, Hydraulic	1
27	1219-713	Reducer, -12 -8	1
28	1219-783	Plug, ORB-20, HEX	1
29	1219-800	Tee, FJIC-8/MJIC-8/MJIC-8	4
30	1219-802	Elbow, 90, MJIC-12/MORB-12	1
31	1219-876	Tee, Run, -12	1
32	1219-890	Adapter, MJIC-24/MORB-20	2
33	1219-984	Adapter, MJIC-12/MORB-8	1
34	1222-184	Plastic Tie	17
35	1240-137	Clamp Body, 2 PCS, 1.50DIA	5
36	1240-143	Cover Plate, Dual 2.04 X 1.18	14
37	1240-153	Rail Nut, HEX 0.3125-18	1
38	1240-155	Cover Plate, Dual 4.02 X 1.18	4
39	1240-157	Rail Nut, HEX 0.25-20	24
40	1240-160	Clamp Body, 2 PCS, 0.625DIA	4
41	1240-162	Cover Plate 1.59 X 1.18	4
42	1240-167	Clamp Body, 2 PCS, 0.625DIA Dual	14
43	1240-186	Clamp T-Bolt	4
44	1240-195	Cover Plate 3.34 X 2.36	6
45	1240-206	Clamp	4
46	1240-236	Stacking Bolt, 0.375-16 X 3.03	6
47	1240-237	Plate, Safety Locking 3.34 X 1.18	3
48	1240-251	Clamp Body, 2 PCS, 1.50DIA Dual	4
49	1240-266	Clamp Body, 2 PCS, 4.00DIA	1

* ITEM NOT SHOWN IN ILLUSTRATION

WHEN ORDERING PARTS, SPECIFY MODEL NUMBER, SERIAL NUMBER AND DESCRIPTION OF PARTS REQUIRED

REF	PART NO.	DESCRIPTION	QTY
	T134320 (Rev. D)	*Lower Hydraulic ASSY T7*	
50	1240-267	Cover Plate 5.67 X 1.18	1
51	1240-270	Clamp Body, 2 PCS, 1.25DIA	5
52	1240-272	Clamp Body, 2 PCS, 1.08DIA	1
53	1240-276	Weld Plate 3.93 X 1.18, Plated	2
54	1240-29	Clamp P, 1.125 DIA	2
55	1240-81	4.13 / 4.44 Clamp	4
56	1240-91	Clamp P, 1.5 DIA	20
57	12508-15	Sleeve	3
58	12508-24	Sleeve	4
59	200B2270-47	Hose, Hydraulic	1
60	200B2270-69	Hose, Suction	1
61	200B2270-99	Hose, Hydraulic	1
62	363-1072	Elbow, 90°	1
63	363-1412	Insert, Beaded 2" 90	1
64	375-0400	Adapter, MORB-6/HQC-4	3
65	**505-05002**	Kit, Split Flange, C61-32 (see page 325)	1
66	707-7409	Tube, -10, MJIC-8/MJIC-8	3
67	**708-2210**	Outrigger Valve (see page 437)	2
68	**708-2211**	Valve, Extend-Retract (see page 440)	1
69	717-0328	Valve, Front Jack	1
70	717-0627-22	Hose	1
71	717-0629-50	Hose	1
72	717-0631-37	Hose	1
73	717-0631-70	Hose	1
74	717-0631-99	Hose	1
75	717-0668-39	Hose	1
76	717-0676-63	Hose, ASSY 0.75 ID	1
77	717-0765	Tube, -10, MJIC-8/MJIC-8	2
78	718-0333	Tube, -24, MJIC-24/FJIC-24SW/MJIC-20	1
79	718-0502	Tube, Suction	1
80	718-0554-32	Hose, ASSY 1.50 ID	1
81	718-0560-24	718-0560-24	3
82	718-0561-66	Hose, ASSY 1.50 ID	1
83	718-0562-27	Hose, ASSY 1.25 ID	1
84	718-0563-38	Hose, ASSY 1.25 ID	1
85	718-0565-36	Hose, ASSY 1.25 ID	1
86	718-0598	Tube, Front Jack	2
87	**718A0040**	Hydraulic Tank Assembly (see page 441)	1
88	720-0298-125	Hose, -12, FJIC-12SW/FJIC-12SW90	1
89	**720-0441**	Valve, Diverter (see page 443)	1
90	722-0274	Tube, Winch Pressure	1
91	MK212092-30	Hose, -8, FJIC-8SW/FJIC-8SW	1
92	MK212093-25	Hose	1
93	MK212093-32	Hose	1
94	MK212093-93	Hose	1
95	MK212095-19	Hose	1
96	MK212382-50	Hose, -12, FJIC-12SW/FJIC-12SW90	1
97	MK213521-135	Hose, 18, FJIC-8SW/FJIC-8SW	1
98	MK213521-76	Hose, ASSY .50 ID	1

* ITEM NOT SHOWN IN ILLUSTRATION

WHEN ORDERING PARTS, SPECIFY MODEL NUMBER, SERIAL NUMBER AND DESCRIPTION OF PARTS REQUIRED

REF	PART NO.	DESCRIPTION	QTY
	T134320 (Rev. D)	*Lower Hydraulic ASSY T7*	
99	MK213521-89	Hose	1
100	MK213522-16	Hose	1
101*	MK213522-21	Hose	1
102	MK213522-24	Hose	2
103	MK213522-35	Hose	2
104	MK213522-38	Hose	1
105	MK213522-69	Hose, -8, FJIC-8SW/FJIC-8SW90	3
106	MK213522-74	Hose, -8, FJIC-8SW/FJIC-8SW90	2
107	MK213522-75	Hose, -8, FJIC-8SW/FJIC-8SW90	2
108	MK213522-80	Hose	2
109	N04-250C000-25	Nut, HEX 0.25-20, ST SQC G5	2
110	N04-312C000-25	Nut, HEX 0.3125-18, ST Z GR5	28
111	N04-500C000-25	Nut, HEX 0.50-13, ST Z GR5	14
112	NYL-500C000-25	Nut, Lock, .50C	3
113*	S01-250CA75-25	SCR, HHCS 0.25-20 X 1.75, ST Z GR5	2
114	S01-250CB25-25	SCR, HHCS 0.25-20 X 2.25, ST Z GR5	20
115	S01-250CB50-25	SCR, HHCS 0.25-20 X 2.50, ST Z GR5	2
116	S01-250CD00-25	SCR, HHCS 0.25-20 X 4.00, ST Z GR5	2
117	S01-250CE00-25	SCR, HHCS 0.25-20 X 5.00, ST Z GR5	2
118	S01-312CA50-25	Capscrew, .31C X 1.50	4
119	S01-312CB25-25	SCR, HHCS 0.3125-18 X 2.25, ST Z G5	1
120	S01-312CB50-25	SCR, HHCS 0.3125-18 X 2.50, ST Z G5	1
121	S01-312CC00-25	SCR, HHCS 0.3125-18 X 3.00, ST SQC G5	2
122	S01-375CB75-25	SCR, HHCS 0.375-16 X 2.75, ST Z GR5	12
123	S01-375CC25-25	SCR, HHCS 0.375-16 X 3.25, ST Z GR5	2
124	S01-500CA50-25	SCR, HHCS 0.50-13 X 1.50, ST Z GR5	15
125	S01-625CA75-25	SCR, HHCS 0.625-11 X 1.75, ST Z GR5	4
126	SHF-375C750-25	SCR, HHCS FT 0.375-16 X 0.75, STZ G5	4
127	SHF-500CA25-Y8	SCR, HHCS FT 0.50-13 X 1.25, STYZ G8	4
128	T02-500CB50-P0	Stud, FT 0.500-13X 2.5, STL	2
129	T110887	Hose, -8, 250, FJIC-8SW/FJIC-8SW, 3450	1
130	T134207	Plate	2
131	T134757	Tube, Suction	1
132	T134758	Tube, Cooler-Tank	1
133	T134759	Tube, Cooler	1
134	T134761	Tube, Cooler	1
135	**T135078**	Oil Cooler ASSY (see page 444)	1
136	T135082	Tube, Winch	1
137	T135084	Tube	1
138	T135432	Tube, Boom Pressure	1
139	T135433	Tube, Cooler IN	1
140	T142661	Hose, -16, 5000, FOFS-20SW/45C62-16, 750	1
141	T144449-62	Hose, -12, 4000, FJIC-12/90C61-16, 1575	1
142	W07-250X000-20	WSH, LCK, MED SPLT 0.25, ST Z	2
143	W07-312X000-20	WSH, LCK, MED SPLT 0.3125, ST SQC	24
144	W07-375X000-20	Washer Lock 3/8 MED	4
145	W07-500X000-20	WSH, LCK, MED SPLT 0.50, ST SQC	12
146	W07-625X000-20	WSH, LCK, MED SPLT 0.625, ST Z	4
147	WAH-50NX000-Y2	WSH, FL HRD A-NRW 0.50, ST YZ	9

* ITEM NOT SHOWN IN ILLUSTRATION

WHEN ORDERING PARTS, SPECIFY MODEL NUMBER, SERIAL NUMBER AND DESCRIPTION OF PARTS REQUIRED

REF	PART NO.	DESCRIPTION	QTY
	T134320 (Rev. D)	*Lower Hydraulic ASSY T7*	
148	WAN-25NX000-20	WSH, FL TYPA-NRW 0.25, ST Z	24
149	WAN-31NX000-20	WSH, FL TYPA-NRW 0.3125, ST SQC	4
150	WAW-31WX000-20	WSH, FL TYPA-WID 0.3125, ST SQC	22
151	WAW-50WX000-20	WSH, FL TYPA-WID 0.50, ST SQC	15

* ITEM NOT SHOWN IN ILLUSTRATION

WHEN ORDERING PARTS, SPECIFY MODEL NUMBER, SERIAL NUMBER AND DESCRIPTION OF PARTS REQUIRED

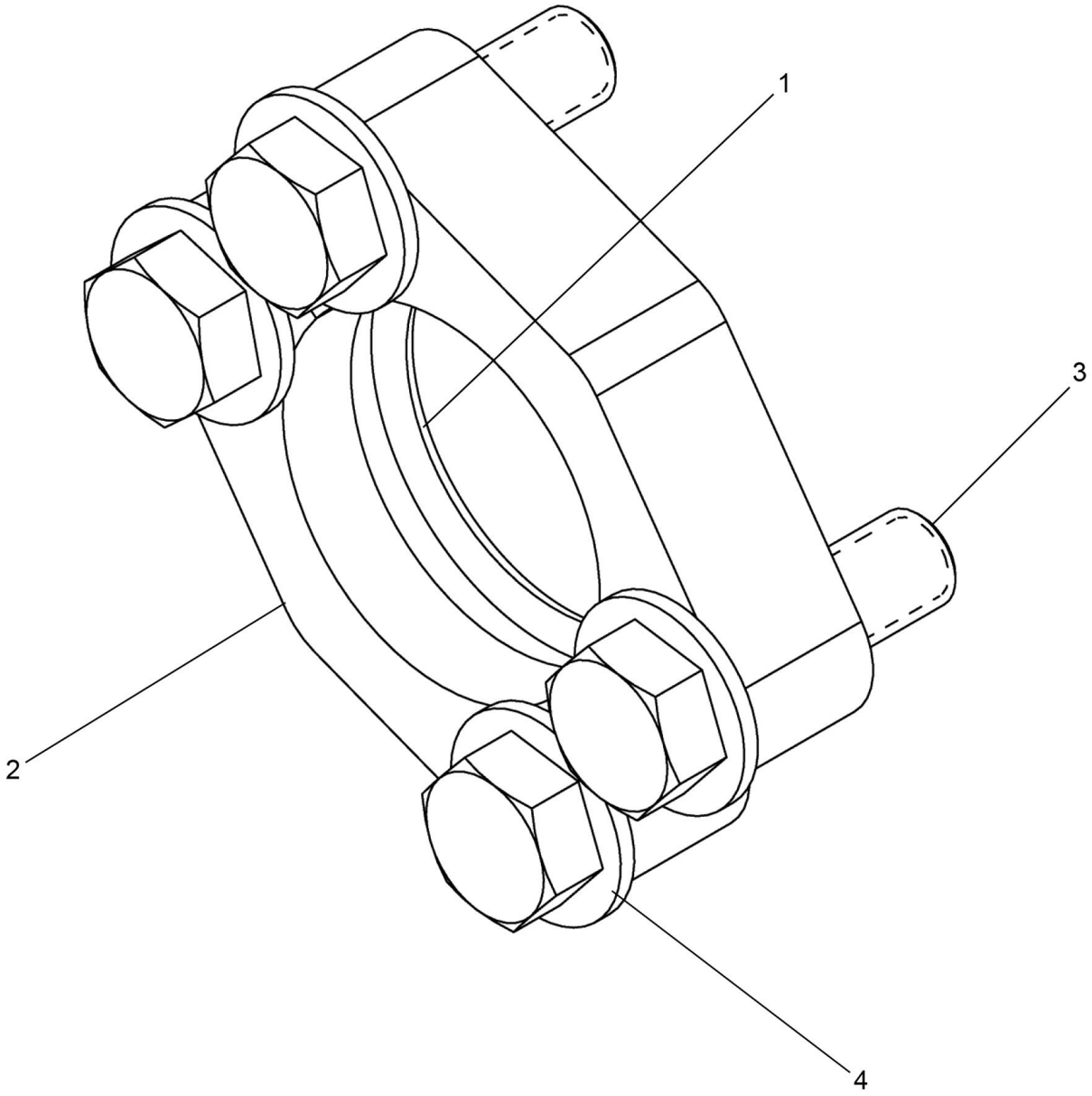

REF	PART NO.	DESCRIPTION	QTY
	12019-751 (Rev. B)	*Clamp, C61-16, Kit*	
1	1218-103	O-Ring, SAE-16	1
2	1219-665	Clamp, C61-16, Half	2
3	S01-375CA25-25	SCR, HHCS 0.375-16 X 1.25, ST Z GR5	4
4	WAR-375X000-20	WSH, FL TYPA-REG 0.375, ST Z	4

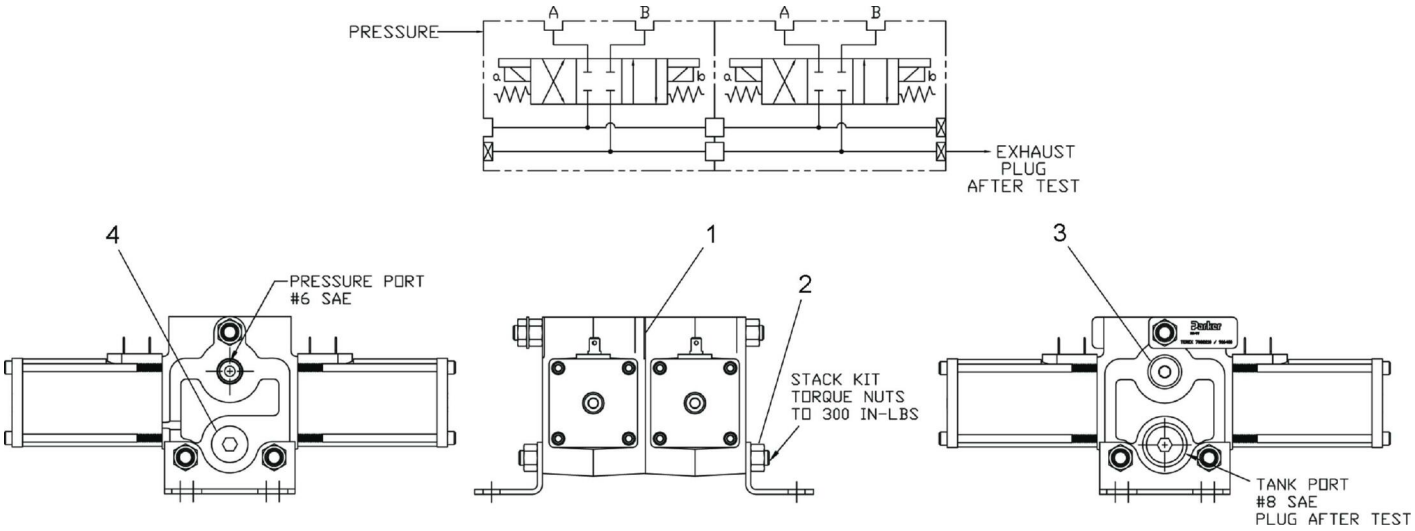

REF	PART NO.	DESCRIPTION	QTY
	708-2210 (Rev. 00)	*Outrigger Valve*	
1	219888*	Myler Shim	3
2	219887	Kit, Stack	1
3	222913	#6 SAE Plug	1
3.1	1218-144	O-Ring	1
4	222912	#8 SAE Plug	1
4.1	1218-34	O-Ring	1
5**	**OR Valve-Body & Spool**	Body & Spool ASSY, OR Valve (see page 438)	1

* Place Myler Shim on tie rods between sections.
** ITEM NOT SHOWN IN ILLUSTRATION

WHEN ORDERING PARTS, SPECIFY MODEL NUMBER, SERIAL NUMBER AND DESCRIPTION OF PARTS REQUIRED

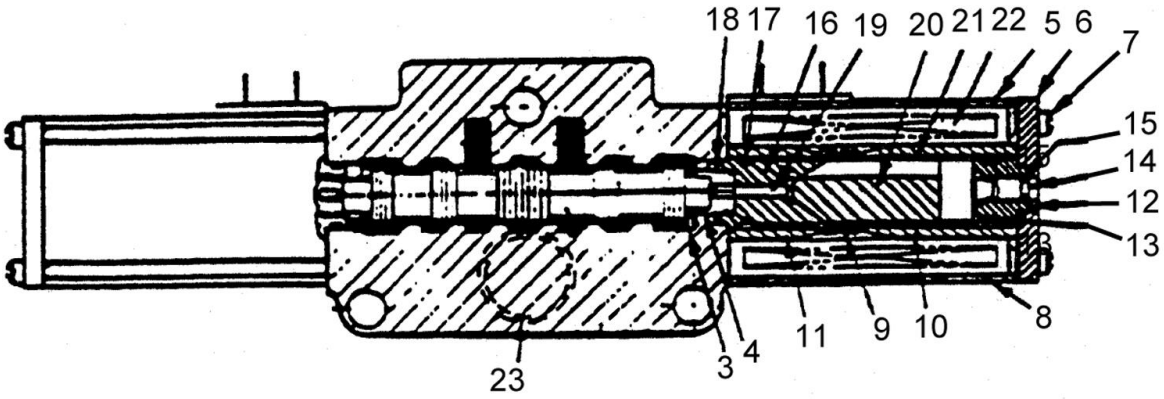
18
17
16
19
20
21
22
5
6
7
15
14
12
13
8
10
9
11
4
3
23

REF	PART NO.	DESCRIPTION	QTY
	OR Valve-Body & Spool (Rev. 00)	*Body & Spool ASSY, OR Valve*	
	A29309	Kit, Seal (Includes items 13, 15, 17 & 18 below)	
3	26841	Washer	1
4	29620	Spring	1
5	26843	Solenoid, Less Coil (Incl. Items 6 thru 21)	1
6	26808	Plate, End	2
7	29595	Screw	8
8	29596	Case	2
9	26802	Spring	2
10	29597	Sleeve, Outer	2
11	29598	Sleeve, Inner	2
12	29599	Guide, Push Pin	2
13	29311	O-Ring	2
14	29624	Pin, Push	2
15	29310	Ring, Quad	2
16	29602	Cone, Female	2
17	29311	O-Ring	2
18	29312	O-Ring	2
19	29603	Pin, Push	2
20	29605	Plunger	2
21	29607	Tube, Guide	2
22	24263	Coil	2
23	23291	O-Ring	1
23A	29627	O-Ring	1

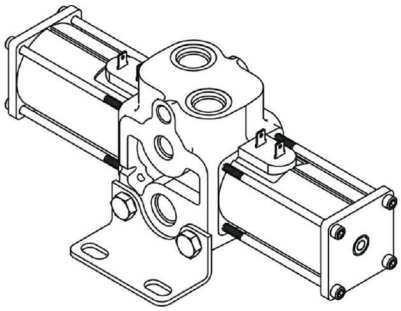

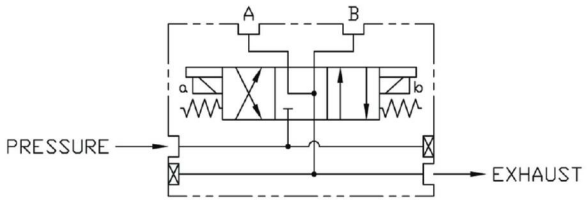

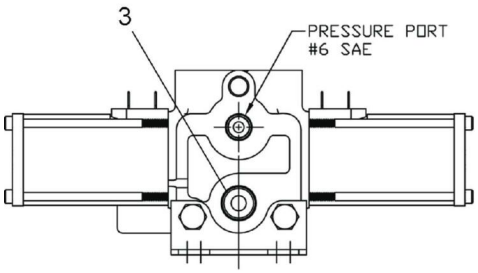

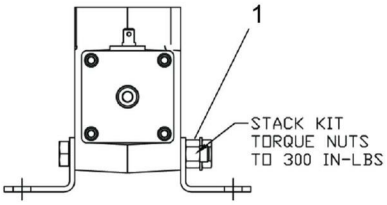

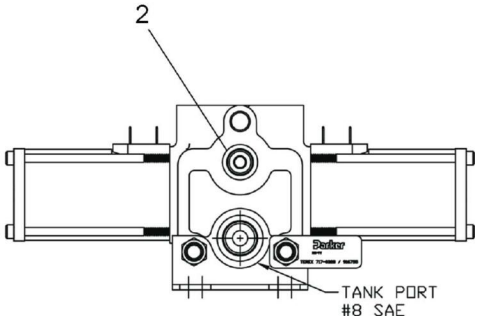

REF	PART NO.	DESCRIPTION	QTY
	708-2211 (Rev. 00)	*Valve, Extend-Retract*	
1	219874	Kit, Stack	1
2	222913	#6 SAE Plug	1
2.1	1218-144	O-Ring	1
3	222912	#8 SAE Plug	1
3.1	1218-34	O-Ring	1
4*	**OR Valve-Body & Spool**	Body & Spool ASSY, OR Valve (see page 438)	1

* ITEM NOT SHOWN IN ILLUSTRATION

WHEN ORDERING PARTS, SPECIFY MODEL NUMBER, SERIAL NUMBER AND DESCRIPTION OF PARTS REQUIRED

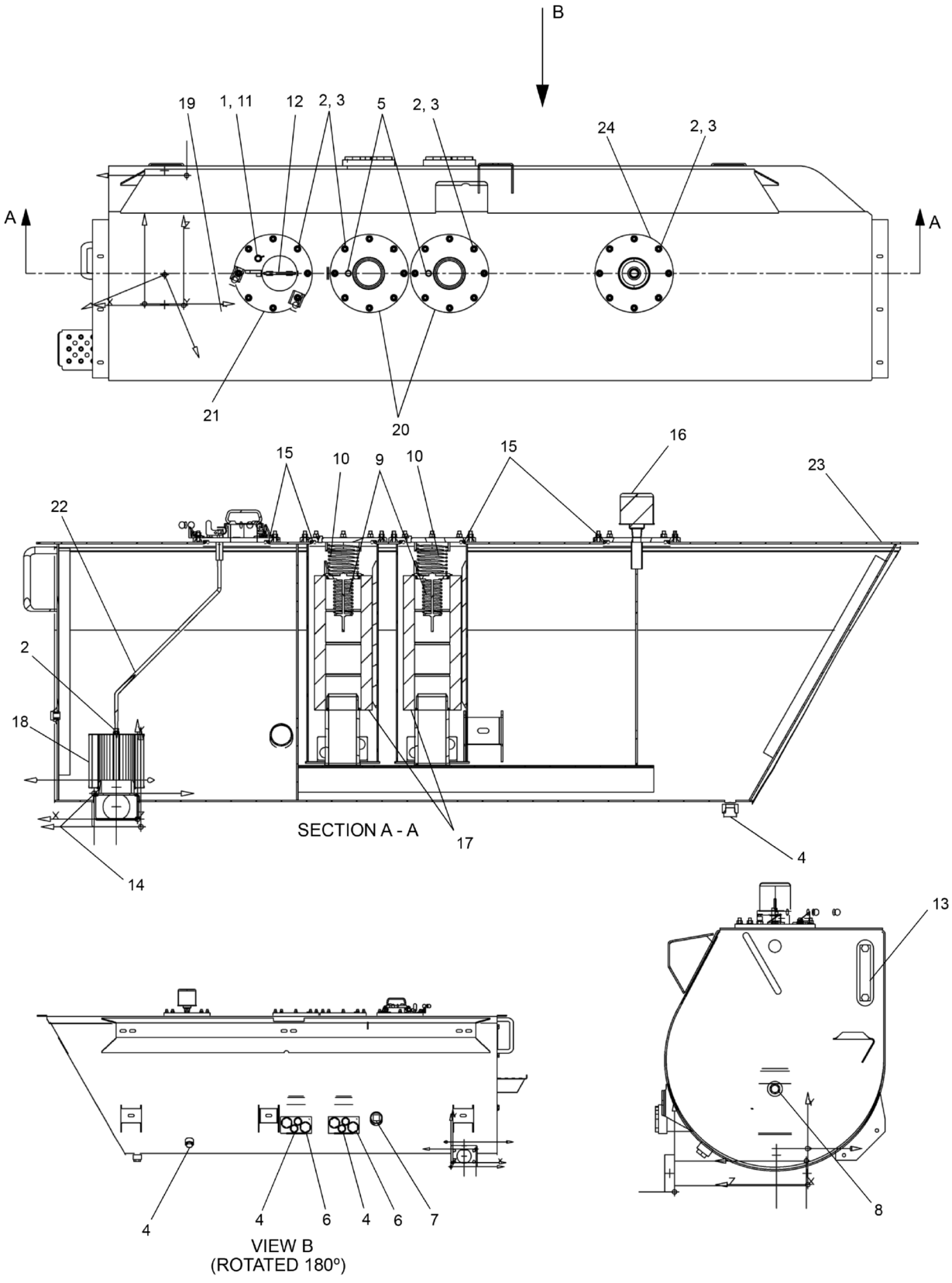

WHEN ORDERING PARTS, SPECIFY MODEL NUMBER, SERIAL NUMBER AND DESCRIPTION OF PARTS REQUIRED

REF	PART NO.	DESCRIPTION	QTY
	718A0040 (Rev. F)	*Hydraulic Tank Assembly*	
1	12019-558	Dust Cap, HQC-4	1
2	1205-194	3/8NC Lock Nut	34
3	1209-4	3/8 Flat Washer	32
4	1219-485	Plug, ORB-12, HEX	6
5	1219-763	4 O-Ring Plug	2
6	1219-783	Plug, ORB-20, HEX	4
7	1219-869	2 NPTF Plug	1
8	1219-9	Plug, MNPT-8	1
9	22919	By-Pass Valve	2
10	22920	Spring	2
11	375-6203	#4 O-Ring Test Port Coupling	1
12	37542	Fill Cap	1
13	434-4020	Gauge Level	1
14	460-0319	O-Ring ARP 346 70B	1
15	460-0436	O-Ring ARP 441 70B	4
16	708-6325	Breather	1
17	708-6449	Filter, Return	2
18	709-7783	Filter, Suction	1
19	709F6170	Handle	1
20	709F7778	Cover	2
21	709F7871	Cover, Fill Cap	1
22	718-0057	Rod	1
23	718F0042	Tank-Hydraulic	1
24	718F0914	Cover, Breather	1

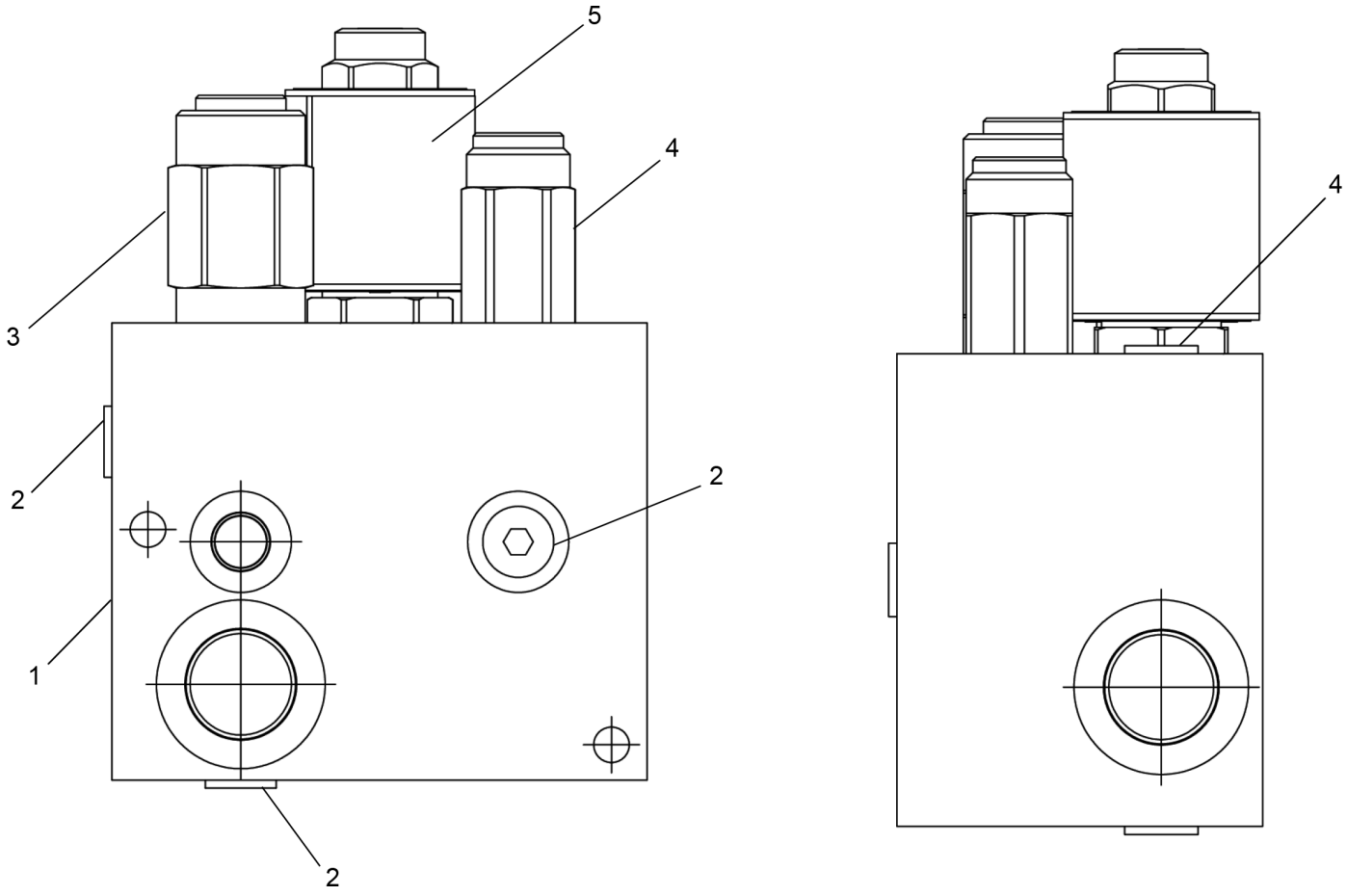

REF	PART NO.	DESCRIPTION	QTY
	720-0441 (Rev. 00)	*Valve, Diverter*	
1	222344	Block	1
2	222345	Plug6	4
3	226925	PR1	1
4	222346	RV1	1
5	222347	SV1	1

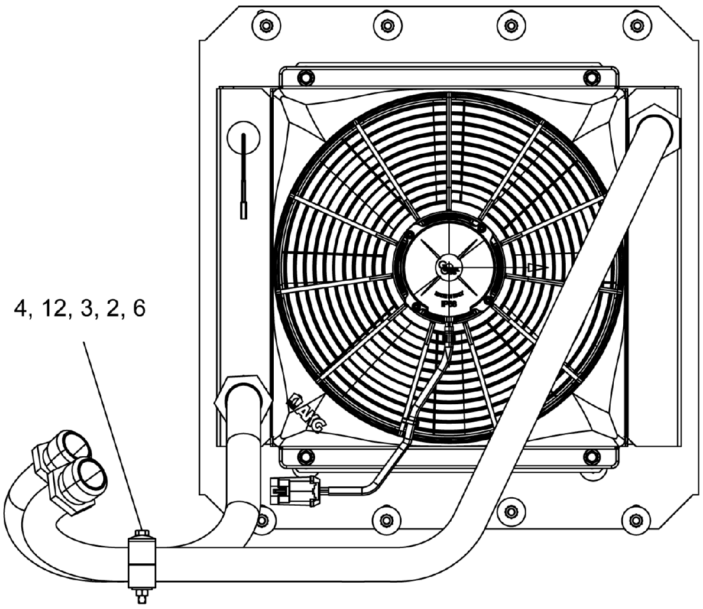
4, 12, 3, 2, 6

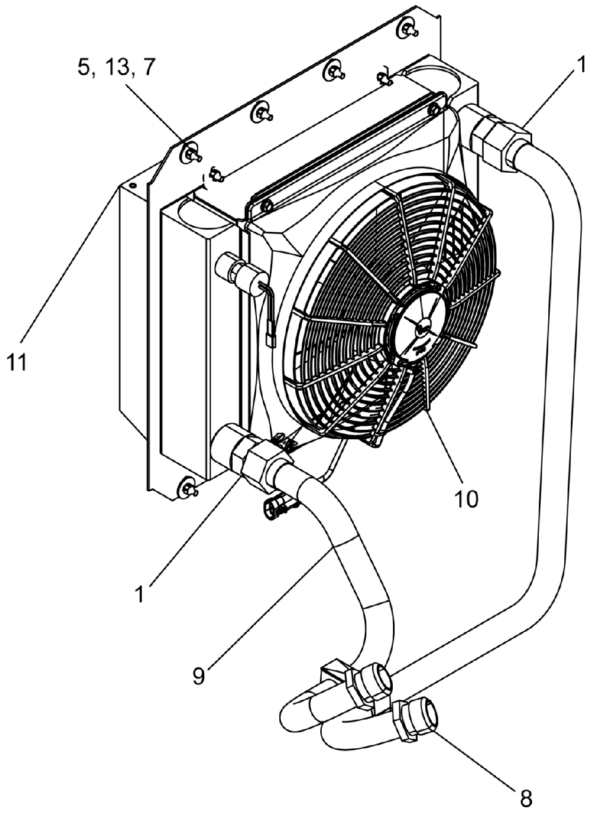
5, 13, 7
1
11
10
1
9
8

REF	PART NO.	DESCRIPTION	QTY
	T135078 (Rev. C)	*Oil Cooler ASSY*	
1	1219-820	Adapter, MJIC-24/MORB-24	2
2	1240-155	Cover Plate, Dual 4.02 X 1.18	1
3	1240-251	Clamp Body, 2 PCS, 1.50DIA Dual	1
4	N04-312C000-25	Nut, HEX 0.3125-18, ST Z GR5	1
5	NKL-312C000-20	Nut, HEX, K-LOCK 0.3125-18, ST SQC	12
6	S01-312CC00-25	SCR, HHCS 0.3125-18 X 3.00, ST SQC G5	1
7	S17-312CA00-E8	SCR, BHTCS 0.312-18 X 1.00, SS18-8	12
8	T135430	Tube	1
9	T135431	Tube	1
10	**T135783**	Oil Cooler (see page 446)	1
11	T135784	Grill	1
12	WAW-31WX000-20	WSH, FL TYPA-WID 0.3125, ST SQC	1
13	WAW-43WX000-E8	WSH, FL TYPA-WID 0.4375, SS 18-8	24

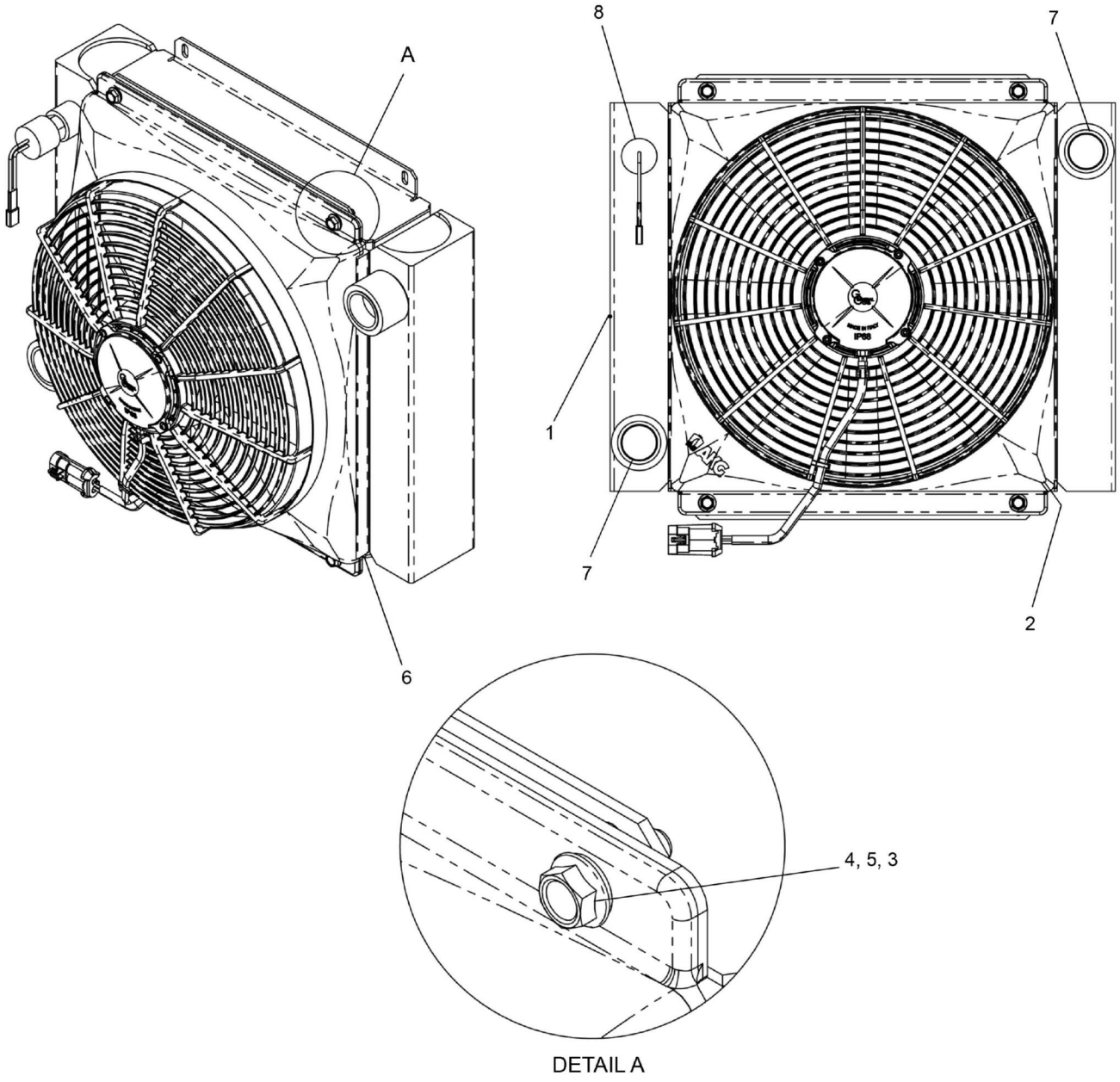

REF	PART NO.	DESCRIPTION	QTY
	T135783 (Rev. A)	*Oil Cooler*	
1	229717	Oil Cooler	1
2	229716	16" GC Fan W/ 12V Motor	1
3	229715	Nut, FLGHD - M8-1.25 (YZ)	4
4	229714	BLT HX FLG M8X1.25 X 25mm CL10.9 YZ	4
5	229713	FLW M8	4
6	229712	Locking Profile Seal	2
7	229711	Plug - Plastic (Tapered)	2
8	229710	Temperature Switch	1

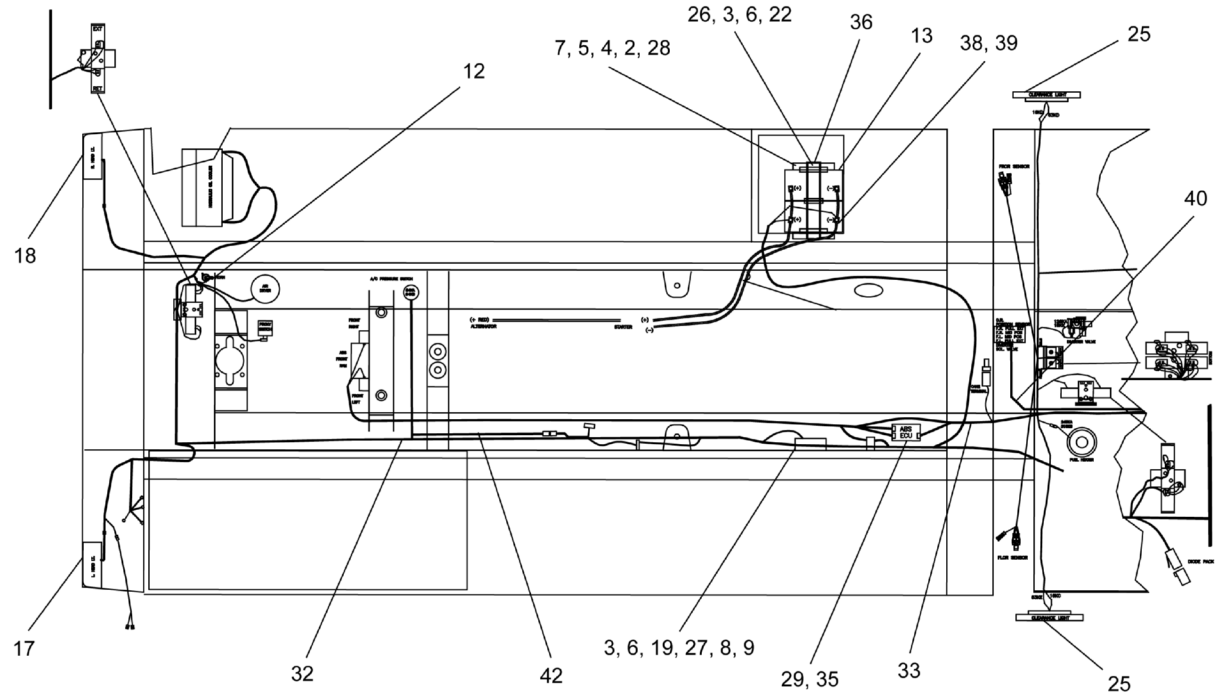

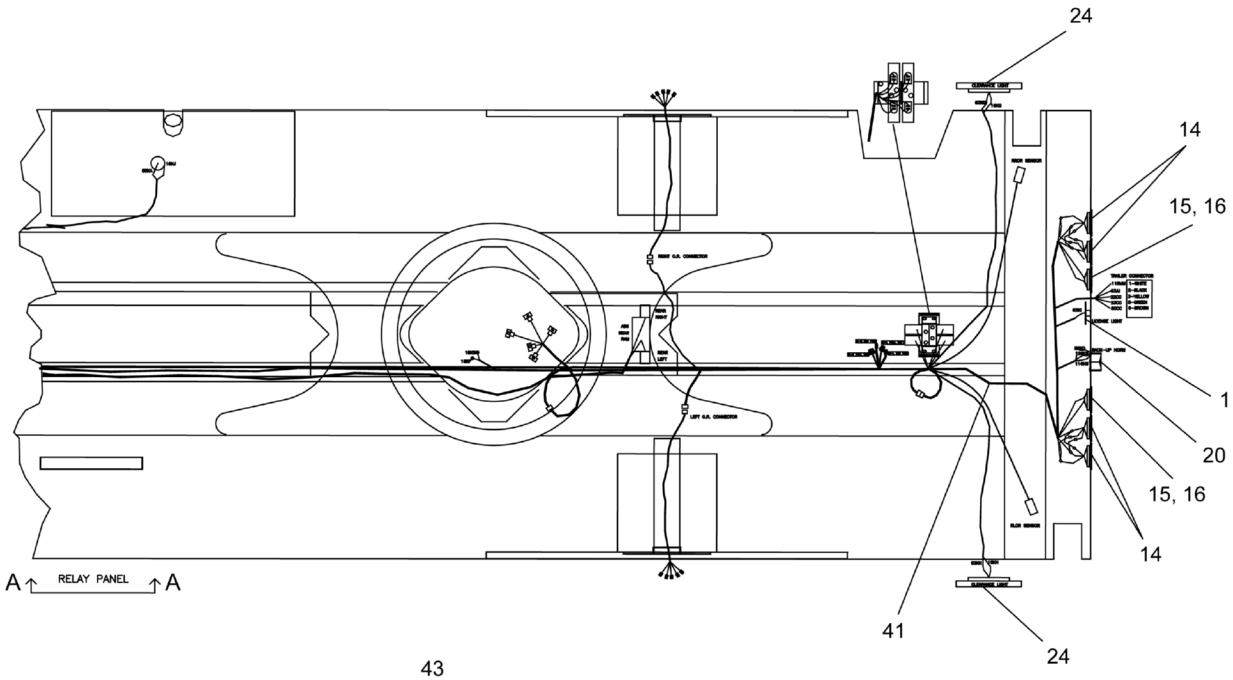

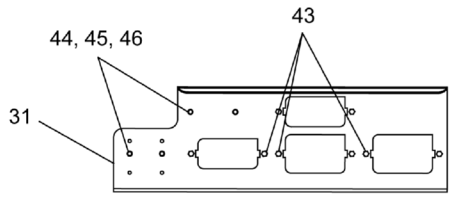

VIEW A - A

WHEN ORDERING PARTS, SPECIFY MODEL NUMBER, SERIAL NUMBER AND DESCRIPTION OF PARTS REQUIRED

REF	PART NO.	DESCRIPTION	QTY
	T156230 (Rev. A)	*Lower Electrical GP, T 7-2017*	
1	11731	License Plate Bracket	1
2	SHF-375CA00-25	HHCS 3/8 NC X 1 GR5 Zinc	4
3	NYL-312C000-25	Nut, HEX NYL-INS 0.312-18, ST SQC G5	6
4	N04-375C000-25	Nut, HEX 0.375- 16, ST Z GR5	4
5	WAW-37WX000-20	WSH, FL TYPA-WID 0.375, ST Z	4
6	WAN-31NX000-20	WSH, FL TYPA-NRW 0.3125, ST SQC	10
7	W07-375X000-20	Washer Lock 3/8 MED	4
8	W07-312X000-20	WSH, LCK, MED SPLT 0.3125, ST SQC	4
9	N04-312C000-25	Nut, HEX 0.3125-18, ST Z GR5	4
10*	1222-184	Plastic Tie	50
11*	1222-202	Plastic Tie	50
12	1223-387	Horn 12V	1
13	1223-824	Battery, 31-950T	2
14	1223-864	Tail Light (Red)	4
15	1223-866	Grommet	2
16	1223-867	Light Sealed Beam	2
17	1223-881	ATL Lamp ASSY L.H.	1
18	1223-882	ATL Lamp ASSY	1
19	S01-312CB00-25	SCR, HHCS 0.3125-18 X 2.00, ST Z	4
20	714A1432	Dual Function Alarm	1
21*	N23-190C000-20	Nut, HEX, MACH 10-24, ST Z	2
22	1231-2	5/16-18 Wing Nut	2
23*	SL4-190C750-20	SCR, SLT RND MS 10-24 X 0.750 ST Z	2
24	420 4411	Red Clearance Light	2
25	420 4412	Yellow Clear Light	2
26	F46300	Hold Down Bolt	2
27	T135291	Mount, ACM	1
28	707 9544	Angle	2
29	T148350	ECU, 12V, 500k, Premium	1
30*	W08-190X000-P0	WSH, LCK, HVY SPLT 10, STL	2
31	T141443	Panel, Relay Weldment, 2017	1
32	T150381	Harness, Main Chassis, 2017	1
33	T150378	Harness, ABS, 2017	1
34*	T155751	Upper Electrical SCH	REF
35	S14-250CA50-HB	SCR, SHCS 0.25-20 X 1.50, ST B	4
36	706F7613	Hold Down	1
37*	1223-770	Triple Light Bar	1
38	1233-39	Screw, Machine	2
39	NYL-190C000-22	Nut, HEX NYL-INS 10-24, ST Z G2	2
40	T154162	Harness, Outrigger Sensor, CAN, 2017	1
41	T150387	Harness, Tail, T5, T7, 2017	1
42	T150379	Hraness, AC Adaptor, MTU, 2017	1
43	SMF-06AM025-28	SCR, HHCS M6-1 X 25 FT, ST Z 8.8	6
44	SMF-508M016-28	SCR, HHCS M5-0.8 X 16 FT, ST SQC C8.8	4
45	WMF-50MX000-20	WSH, Flat M5 DIN 125, ST Z	4
46	NYM-508M000-41	Nut, NYL-INS M5-0.8, ST Z C8	4
47*	T150877	Lower Electrical SCH	REF

* ITEM NOT SHOWN IN ILLUSTRATION

WHEN ORDERING PARTS, SPECIFY MODEL NUMBER, SERIAL NUMBER AND DESCRIPTION OF PARTS REQUIRED

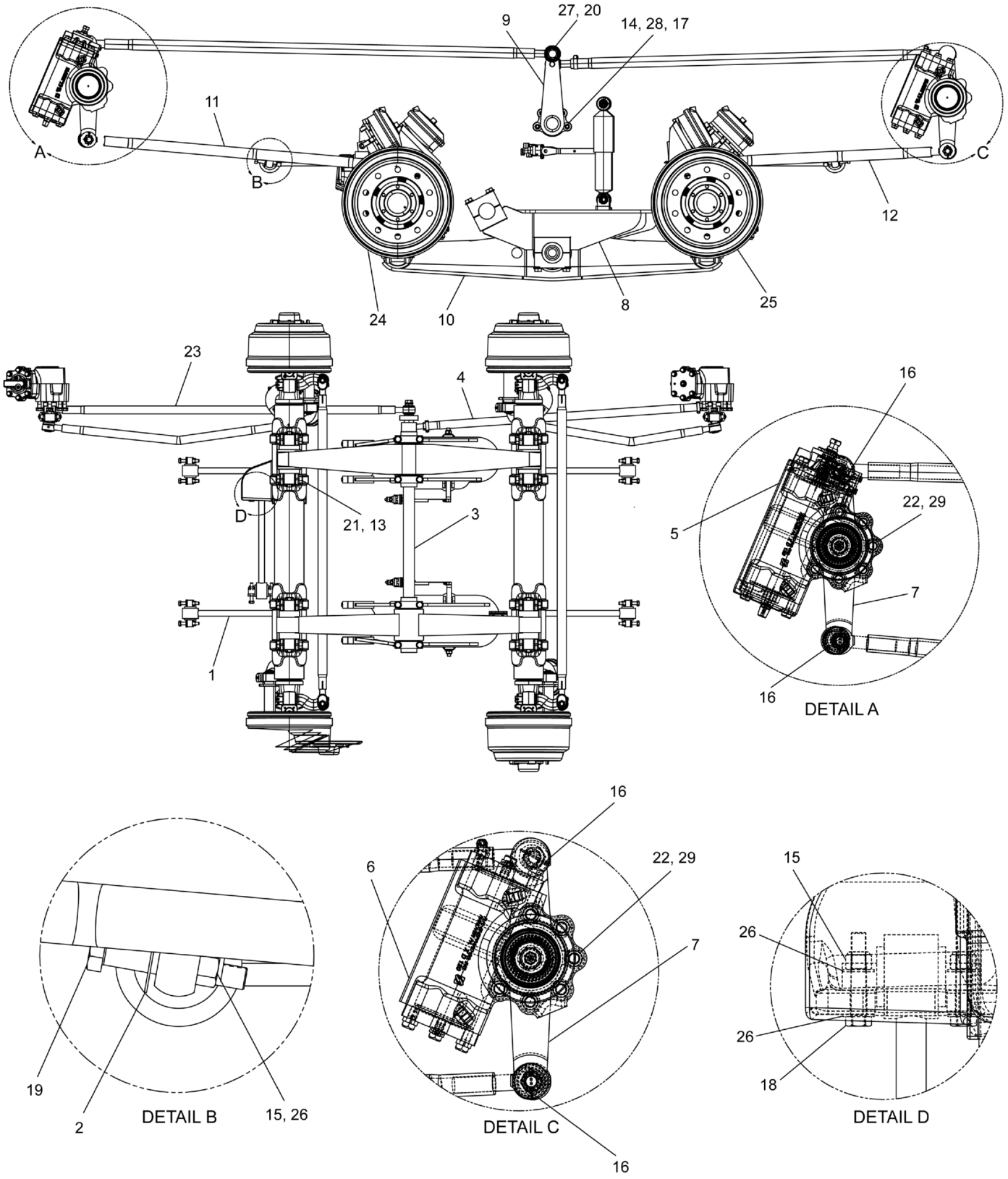

WHEN ORDERING PARTS, SPECIFY MODEL NUMBER, SERIAL NUMBER AND DESCRIPTION OF PARTS REQUIRED

LOAD KING BY CUSTOM TRUCK ONE SOURCE

FRONT SUSPENSION ASSEMBLY

DATE: Released 08-2018

MODEL: 480-126

PAGE: 449

CHAPTER 2

REF	PART NO.	DESCRIPTION	QTY
	722A0194 (Rev. G)	*Front Suspension Assembly*	
1	717-0178	Torque Rod	5
2	717-0180	Shim 2.00 X 1.50 X 0.060	10
3	717-0181	Tube, Center Cross	1
4	717-0413	Steering Link	1
5	**717-1224**	Gear ASSY, Power Steering (see page 451)	1
6	**717-1225**	Gear ASSY, PWR STRNG, Slave (see page 454)	1
7	717-1226	ARM, Vertical Socket	2
8	**717A0375**	Suspension Assembly (see page 456)	1
9	**717A0851**	Steering Pivot Assembly (see page 458)	1
10	**718-0706**	BOGY Beam Kit (see page 459)	1
11	722-0191	Drag Link, Front	1
12	722-0192	Drag Link, Rear	1
13	NTT-A00C000-2A	Nut, HX-TPLCK-TH 1.00-8, ST SQC GA	8
14	NYL-500C000-25	Nut, Lock, .50C	4
15	NYL-625F000-Y8	Nut, HEX NYL-INS 0.625-18, ST YZ G8	20
16	P02-156XA75-20	Pin, Cotter 0.1562 X 1.75, ST SQC	4
17	S01-500CA75-25	SCR, HHCS 0.50-13 X 1.75, ST Z GR5	4
18	S01-625FC50-Y8	SCR, HHCS 0.625-18 X 3.50, ST YZ G8	10
19	S01-625FD00-Y8	SCR, HHCS 0.625-18 X 4.00, ST YZ G8	10
20	S01-875CD00-Y8	SCR, HHCS 0.875-9 X 4.00, ST SQC G8	2
21	S01-A00CE00-25	SCR, HHCS 1.00-8 X 5.00,ST SQC G5	8
22	S07-B0FM070-29	SCR, HHCS M20-2.5 X 70 PT, ST SQC C10.9	12
23	T118121	Steering Link Upper Front	1
24	**T127197**	Axle, Front Steer (see page 460)	1
25	**T127198**	Axle, Rear Steer (see page 467)	1
26	WAH-62NX000-20	WSH, FL HRD A-NRW 0.625, ST SQC	30
27	WAN-87NX000-20	WSH, FL TYPA-NRW 0.875, ST SQC	2
28	WAW-50WX000-20	WSH, FL TYPA-WID 0.50, ST SQC	8
29	WMH-020X000-20	WSH, Flat, Hard M20 D125, ST SQC	12

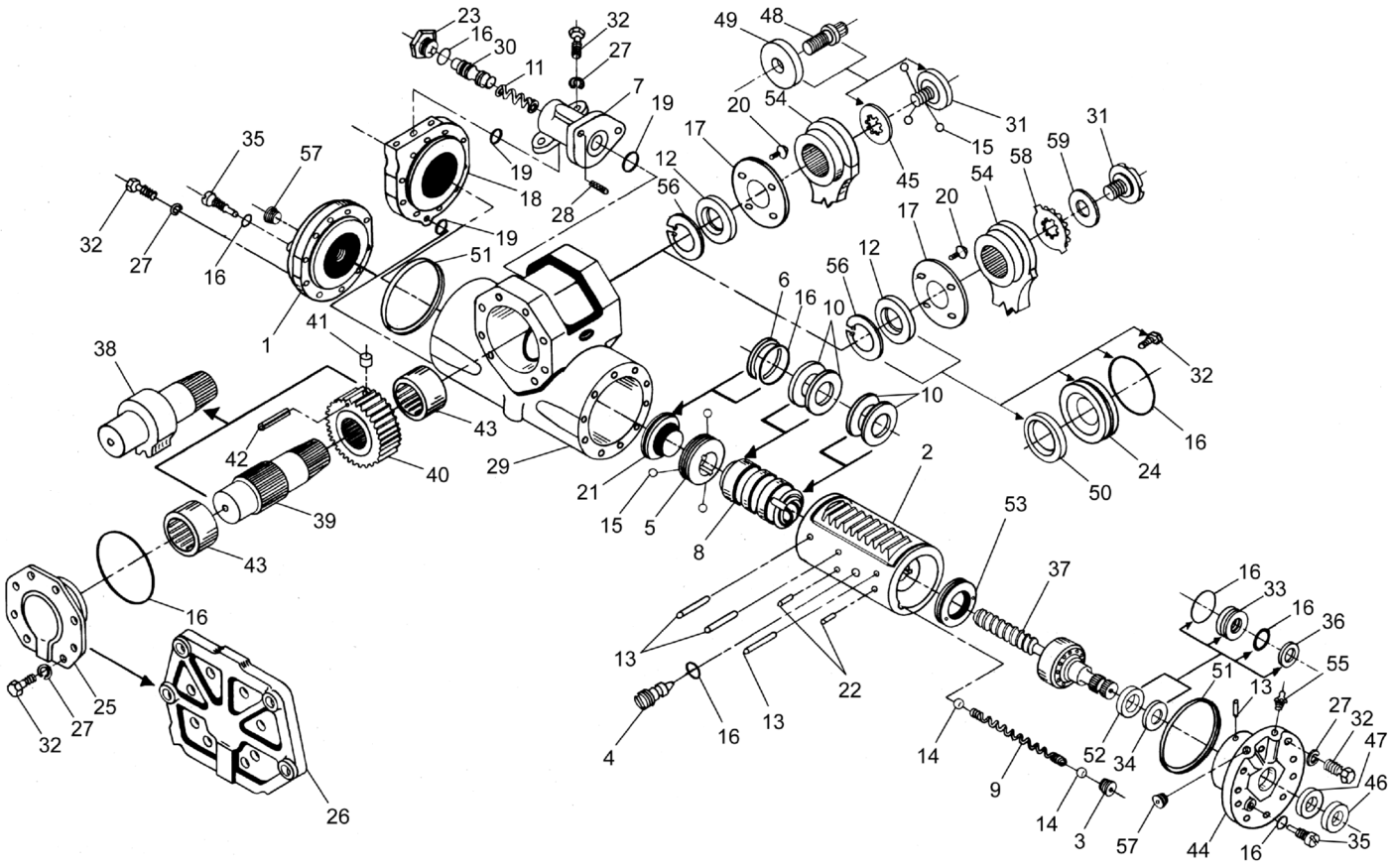

WHEN ORDERING PARTS, SPECIFY MODEL NUMBER, SERIAL NUMBER AND DESCRIPTION OF PARTS REQUIRED

LOAD KING BY CUSTOM TRUCK ONE SOURCE

STEERING GEAR MASTER

DATE: Released 08-2018

MODEL: 480-126

PAGE: 451

CHAPTER 2

REF	PART NO.	DESCRIPTION	QTY
	717-1224 (Rev. 00)	*Gear ASSY, Power Steering*	
1	NSS*_Head	Cylinder Head	1
2	NSS*_Piston	Piston	1
3	NSS*_Valve Seat	Valve Seat (Plunger)	1
4	NSS*_Valve Pin	Valve Positioning Pin	1
5	NSS*_Valve Nut	Valve Adjusting Nut	1
6	NSS*_Teflon Ring	Teflon Ring Hi-Press. Seal	1
7	NSS*_Valve Body	Valve Body, OPT. Press. Relief	1
8	NSS*_Valve	Valve	1
9	NSS*_Spring	Spring, Optional Press. Relief	1
10	NSS*_Springs	Reversing Springs	1
11	NSS*_Spring	Spring, Optional Press. Relief	1
12	NSS*_Oil Seal	Oil Seal (Lip Type)	1
13	NSS*_Pin, Locking	Pin, Locking	1
14	NSS*_Ball, Plunger	Ball, Plunger Relief	1
15	NSS*_Ball, Nylon	Ball, Nylon	1
16	NSS*_O-Ring	O-Ring	1
17	NSS*_Seal Retainer	Seal Retainer	1
18	NSS*_CYL. Relief	CYL. HD. OPT. Press. Relief	1
19	NSS*_Tetra Seal	Tetra Seal OPT. Press. REL.	1
20	NSS*_Capscrew	Capscrew (Button Head)	1
21	NSS*_Piston Plug	Piston Plug	1
22	NSS*_Knurled Plug	Knurled Plug	1
23	NSS*_Plug, Rel.	Plug, Optional Pressure Rel.	1
24	NSS*_Seal Retainer	Seal Retainer	1
25	NSS*_Standard Cover	Standard Cover	1
26	NSS*_Mounting Cover	Mounting Cover	1
27	NSS*_Lockwasher	Lockwasher	1
28	NSS*_REL. Valve	Screen Press. REL. Valve	1
29	NSS*_Housing	Housing	1
30	NSS*_Relief	Relief Valve Assembly OPT.	1
31	NSS*_Retainer	Retainer	1
32	NSS*_Hex Head Bolts	Hex Head Bolts	1
33	NSS*_Retainer Seal	Retainer Hi-Press. Seal	1
34	NSS*_Seal Washer	Hi-Press. Seal Back-Up Washer	1
35	NSS*_Plunger	Plunger	1
36	NSS*_Teflon Ring	Teflon Ring Hi-Press. Seal	1
37	NSS*_Actuating Shaft	Actuating Shaft / BRG. ASSY	1
38	NSS*_Sector Shaft	Sector Shaft	1
39	NSS*_Output Shaft	Output Shaft	1
40	NSS*_Pinion	Pinion	1
41	NSS*_Gear Retaining Pin	Gear Retaining Pin	1
42	NSS*_Rollpin	Rollpin	1
43	NSS*_Roller Bearing	Roller Bearing	1
44	NSS*_Bearing Cap	Bearing Cap	1
45	NSS*_Washer	Washer	1
46	NSS*_Salt Seal	Salt Seal	1
47	NSS*_Dirt Seal	Dirt Seal	1
48	NSS*_Special Bolt	Special P. Arm Retention Bolt	1
49	NSS*_Washer Retention	Washer P. Arm Retention	1

* NOT SOLD SEPARATELY.

WHEN ORDERING PARTS, SPECIFY MODEL NUMBER, SERIAL NUMBER AND DESCRIPTION OF PARTS REQUIRED

REF	PART NO.	DESCRIPTION	QTY
	717-1224 (Rev. 00)	*Gear ASSY, Power Steering*	
50	NSS*_Oil.Seal	Oil Seal (Quad-O-DYN)	1
51	NSS*_Seal Ring	Seal RIng	1
52	NSS*_Hi-Pressure	Hi-Pressure Oil Seal	1
53	NSS*_Bearing	Bearing Retaining Nut	1
54	NSS*_Pitman	Pitman Arm	1
55	NSS*_Grease	Grease Fitting	1
56	NSS*_Snap Ring	Snap Ring	1
57	NSS*_Plug	Plug (BRG. Cap & CYL. HD.)	1
58	NSS*_Tabwasher	Tabwasher	1
59	NSS*_Thrust Washer	Thrust Washer	1

* NOT SOLD SEPARATELY.

WHEN ORDERING PARTS, SPECIFY MODEL NUMBER, SERIAL NUMBER AND DESCRIPTION OF PARTS REQUIRED

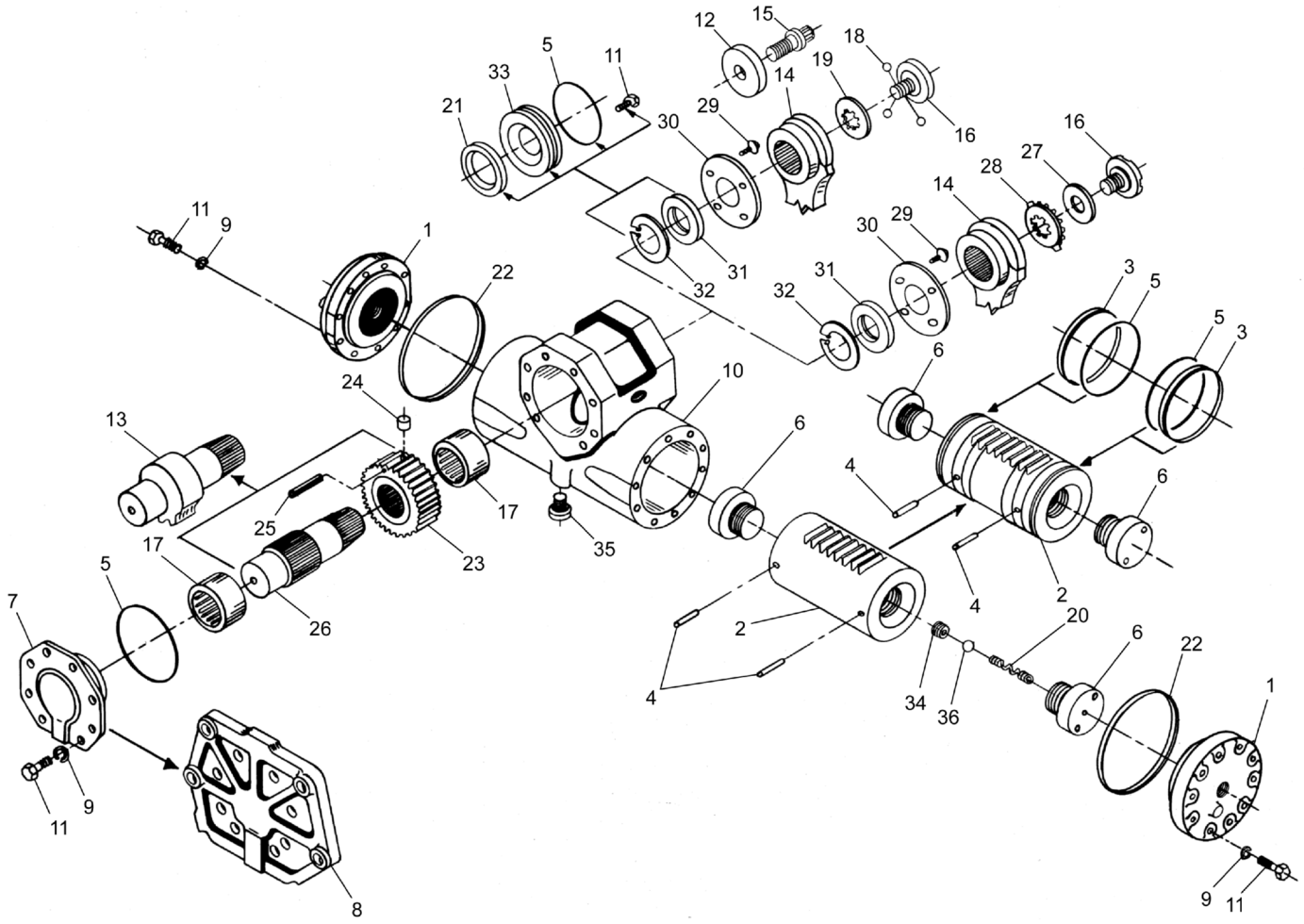

WHEN ORDERING PARTS, SPECIFY MODEL NUMBER, SERIAL NUMBER AND DESCRIPTION OF PARTS REQUIRED

LOAD KING BY CUSTOM TRUCK ONE SOURCE

STEERING GEAR SLAVE

DATE: Released 08-2018

MODEL: 480-126

PAGE: 454

CHAPTER 2

REF	PART NO.	DESCRIPTION	QTY
	717-1225 (Rev. 00)	*Gear ASSY, PWR STRNG, Slave*	
1	NSS*_Cyl.Head	Cylinder Head	1
2	NSS*_Piston	Piston	1
3	NSS*_Tef.Pist	Teflon Piston Ring	1
4	NSS*_Pin.Lock	Pin, Locking	1
5	NSS*_O-Ring	O-Ring	1
6	NSS*_Piston.Plug	Piston Plugs	1
7	NSS*_Std Cover	Standard Cover	1
8	NSS*_MTG Cover	Mounting Cover	1
9	NSS*_LCKWSH	Lockwasher	1
10	NSS*_Housing	Housing	1
11	NSS*_HEX.HBolt	HEX Head Bolt	1
12	NSS*_Washer P.Arm	Washer Pitman Arm Retention	1
13	NSS*_Sector Shaft	Sector Shaft	1
14	NSS*_Pitman Arm	Pitman Arm	1
15	NSS*_Special P. Arm	Special P. Arm Retention Bolt	1
16	NSS*_P. Arm Retainer	Pitman Arm Retainer	1
17	NSS*_Roller Bearing	Roller Bearing	1
18	NSS*_Ball Nylon	Ball Nylon	1
19	NSS*_Washer	Washer	1
20	NSS*_Spring, Piston Plug	Spring, Piston Plug	1
21	NSS*_Oil.Seal	Oil Seal (Quad-O-DYN)	1
22	NSS*_Seal Ring	Seal RIng	1
23	NSS*_Pinion	Pinion	1
24	NSS*_Gear Ret.Pin	Gear Retaining Pin	1
25	NSS*_Rollpin	Rollpin	1
26	NSS*_O/P Shaft	Output Shaft	1
27	NSS*_THR WSH	Thrust Washer	1
28	NSS*_Tab Washer	Tab Washer	1
29	NSS*_CSW	Capscrew (Button Head)	1
30	NSS*_Seal Retainer	Seal Retainer	1
31	NSS*_Oil Seal (Lip Type)	Oil Seal (Lip Type)	1
32	NSS*_Snap Ring	Snap Ring	1
33	NSS*_Seal Retainer	Seal Retainer	1
34	NSS*_Valve Sea	Valve Seat Piston Plug	1
35	NSS*_Plug W/ O-Ring	Plug W/O-Ring	1
36	NSS*_Ball Piston	Ball Piston Plug	1

* NOT SOLD SEPARATELY.

WHEN ORDERING PARTS, SPECIFY MODEL NUMBER, SERIAL NUMBER AND DESCRIPTION OF PARTS REQUIRED

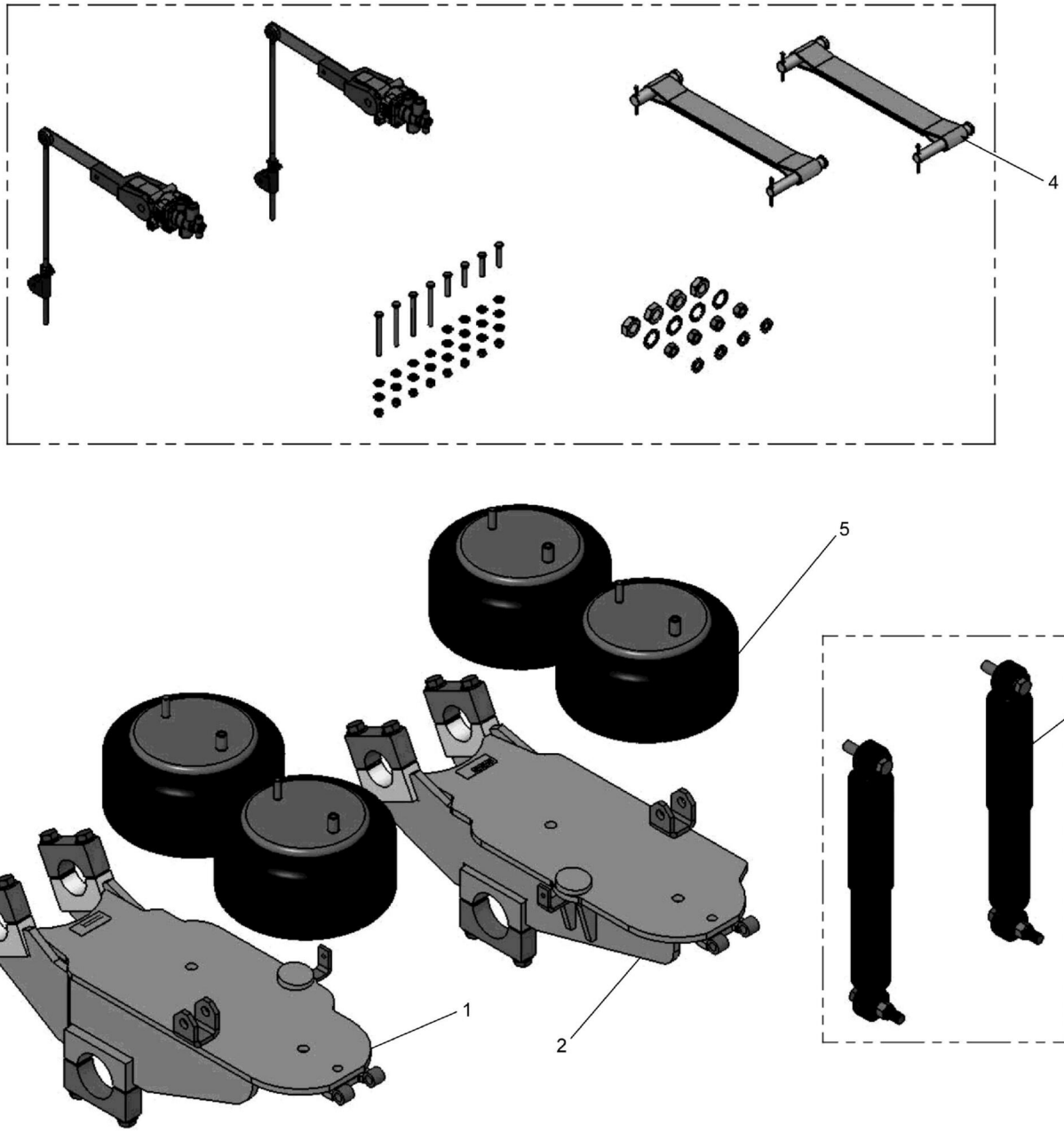

WHEN ORDERING PARTS, SPECIFY MODEL NUMBER, SERIAL NUMBER AND DESCRIPTION OF PARTS REQUIRED

REF	PART NO.	DESCRIPTION	QTY
	717A0375 (Rev. C)	*Suspension Assembly*	
1	226218	Trailing Arm, RR, Left (11,7)	1
2	226219	Trailing Arm, RR, Right (11,7)	1
3	225468	Shock Assembly	1
4	**219123***	Air/Restraint Assembly (see page 268)	1
4A	**228476***	Restraint Strap Kit (see page 270)	1
4B	**228477***	Air/Restraint Kit (see page 271)	1
5	219125	Air Spring, Rolling Lobe	4

SEE NOTES IN THEIR RESPECTIVE PAGES

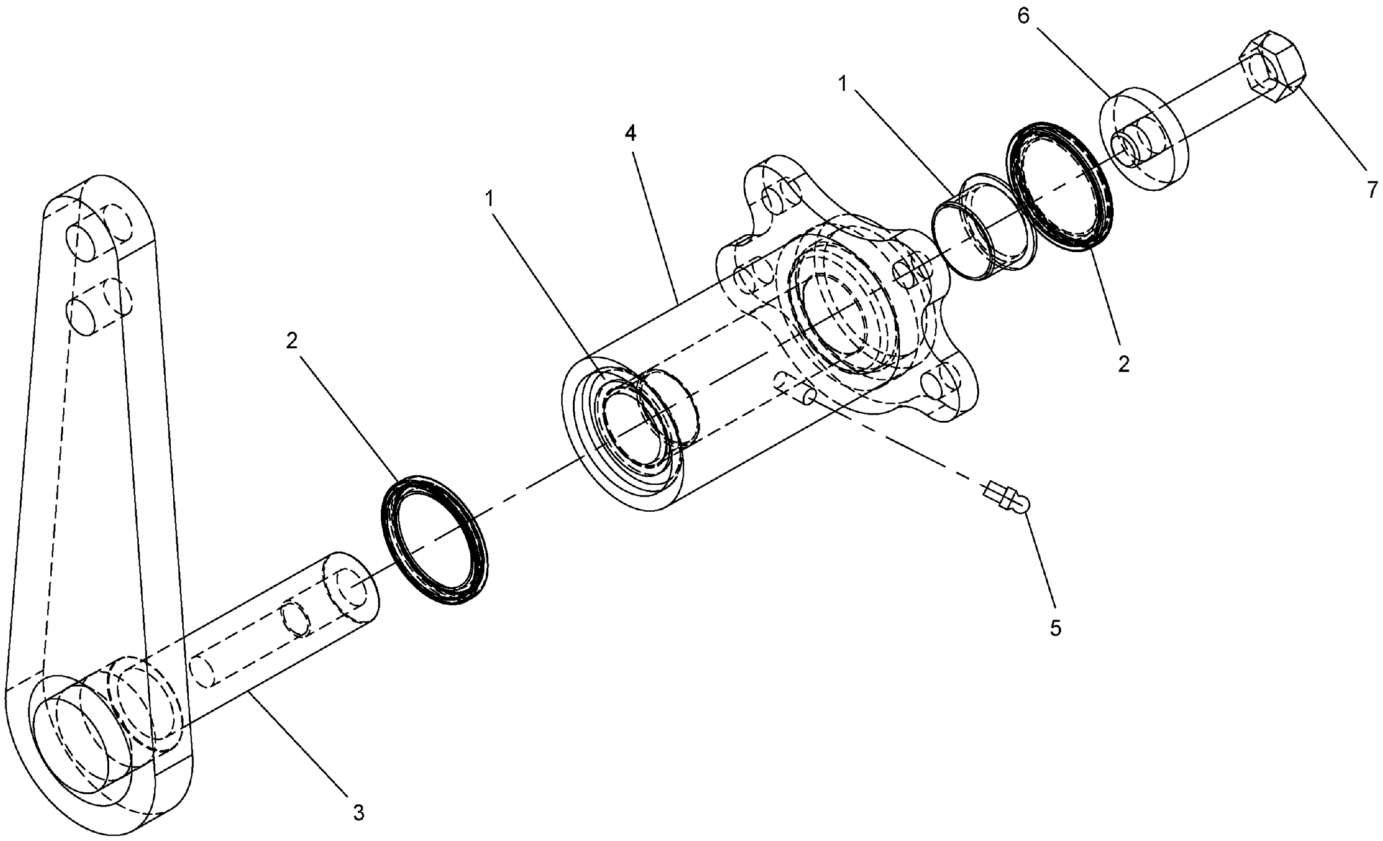

REF	PART NO.	DESCRIPTION	QTY
	717A0851 (Rev. A)	*Steering Pivot Assembly*	
1	1214-146	Bearing	2
2	1218-299	Seal	2
3	717F0854	ARM	1
4	717F0852	Housing Weld	1
5	1213-1	1/8NPT Greese Zerk STR.	1
6	717 0855	Slug	1
7	S01-750CC75-Y8	SCR, HHCS 0.75-10 X 3.75, ST SQC G8	1

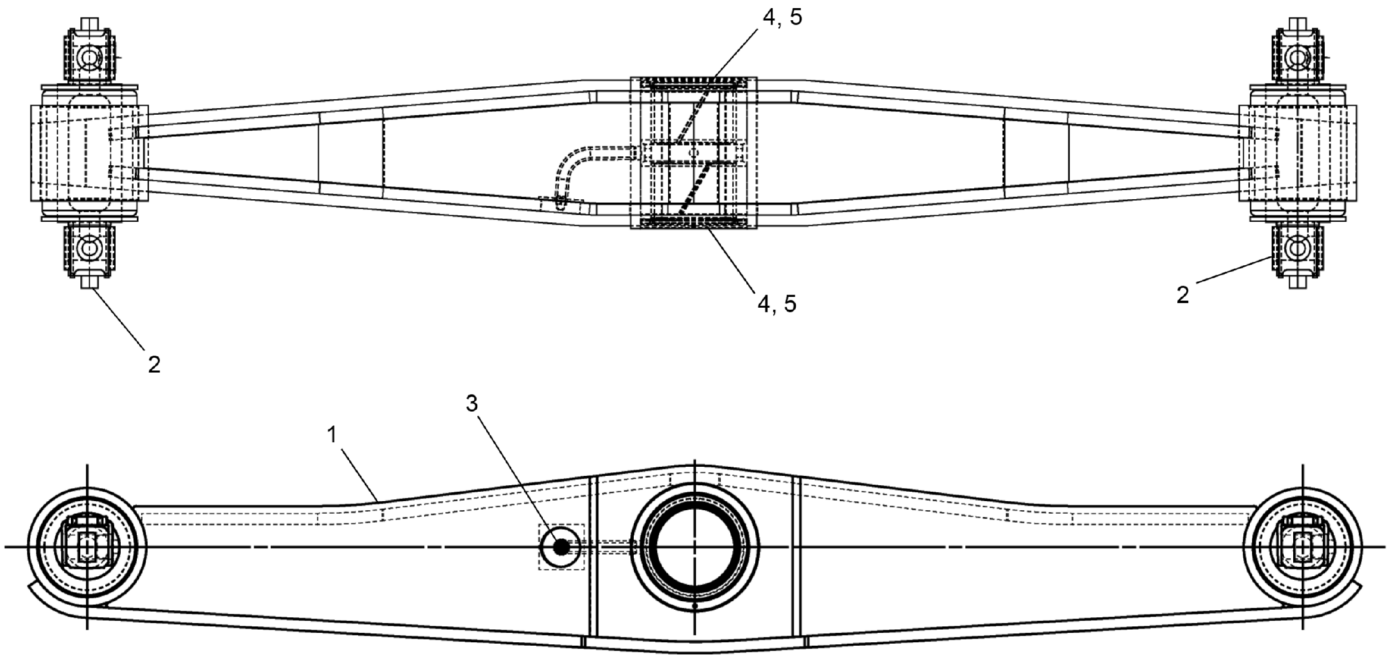

REF	PART NO.	DESCRIPTION	QTY
	718-0706 (Rev. 00)	*BOGY Beam Kit*	
1	225017	Beam Fabrication	1
2	225018	Bushing Assembly	2
3	225019	Fitting	1
4	225020	Seal	2
5	225021	Closure Center Bushing	2

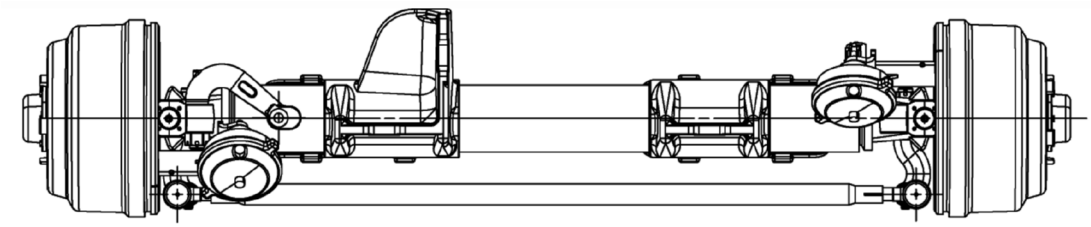

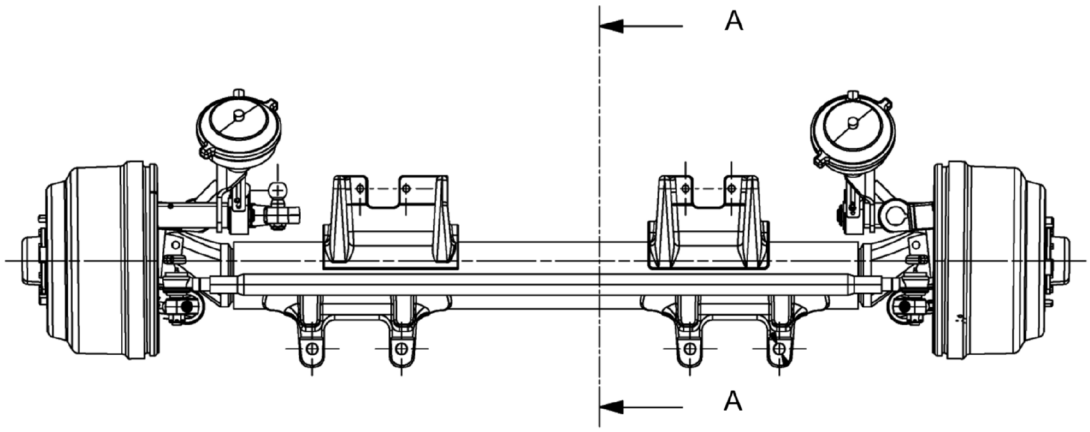

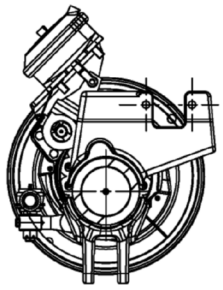

SECTION A-A

WHEN ORDERING PARTS, SPECIFY MODEL NUMBER, SERIAL NUMBER AND DESCRIPTION OF PARTS REQUIRED

REF	PART NO.	DESCRIPTION	QTY
	T127197 (Rev. A)	*Axle, Front Steer*	
1	224290	Oil Seal	2
2	**225030**	Brake ASM - ES16507D LMS (LH) (see page 462)	1
3	**225031**	Brake ASM - ES16507D LMS (RH) (see page 464)	1
4	225443	Steer Axle ASSY - 24T2	1
5	224294	Chaveta Barra Dir	3
6	224295	Torn TAPA Ponta I-80	16
7	224296	Chaveta Brazo DIR	3
8	224297	Nut	2
9	224298	Washer	16
10	224299	Knuckle Pin	2
11	224300	Cotter Pin	2
12	224301	LAINA [0.0300] Punta ED E	1
13	224302	Knuckle Sub-Assembly	1
14	224336	Knuckle Sub-Assembly	1
15	224304	Ackermann Arm	1
16	224305	Ackermann Arm	1
17	225445	Steering Arm	1
18	224307	Knuckle Cap Assembly	4
19	224308	Draw Key	2
20	224309	Key Steer Arm & ACK Arm	3
21	224310	Laina [0.0050] PUNTA ED E	1
22	224311	Laina [0.0100] PUNTA ED E	3
23	224312	Washer Flat	2
24	224313	Gasket-Silastic (OZ)	4
25	224314	Grasa (OZ)	2
26	224315	Nut	2
27	224316	Nut	3
28	224317	Stop Screw	2
29	224318	Locknut	2
30	221968	Cross Link Assembly-72	1
31	225446	Axle Beam & BRKTS Assembly	1
32	224320	Ball Stud	1
33	224321	Nut-Ball Stud	1
34	224322	Rod CIL T188S Perno DIR ED	2
35	224324	Bolt	14
36	224325	Bearing Cone	2
37	225447	CONO RDC	2
38	224314	Grasa (OZ)	18
39	216793	Flat Washer	14
40	216792	Nut-Lock	14
41	224327	Hub Cap Assembly	2
42	224328	Hub & Drum Assembly WEBB	2
43	224329	Flange Nut Assembly	16

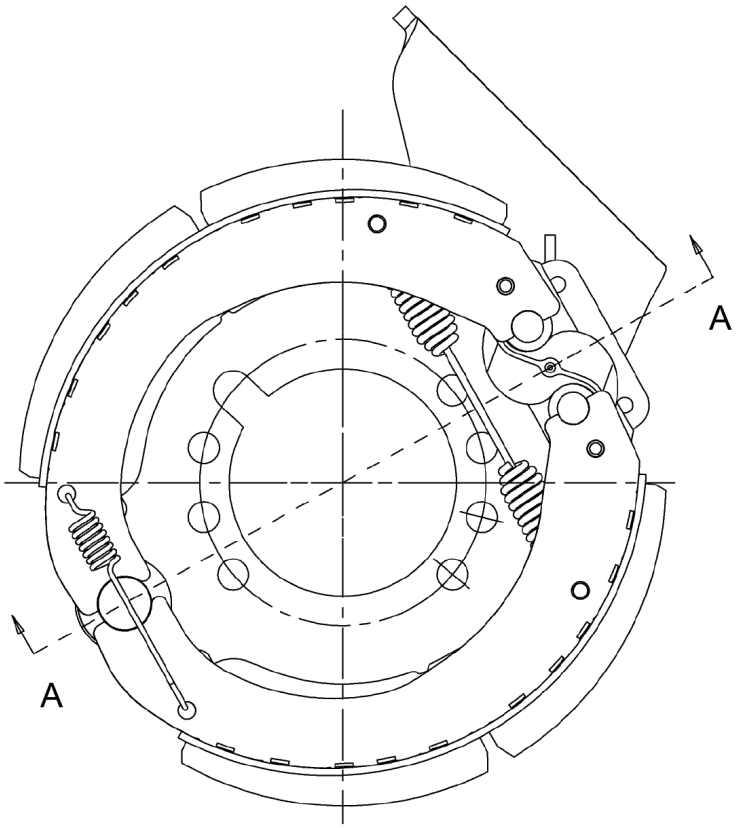

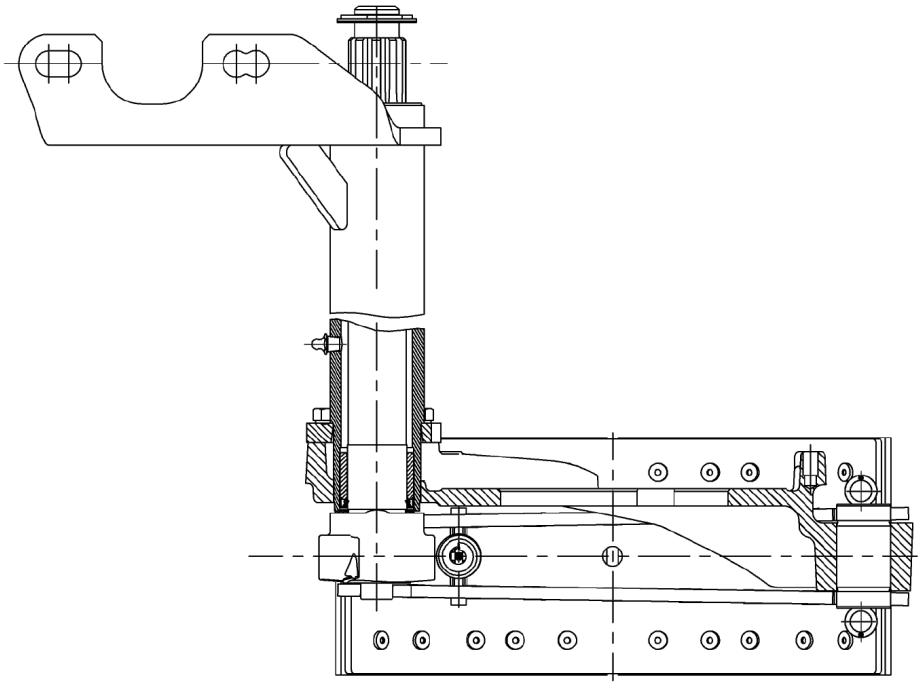

SECTION A - A

REF	PART NO.	DESCRIPTION	QTY
	225030 (Rev. 00)	*Brake ASM - ES16507D LMS (LH)*	
1	229327	Kit-Slack Anchoring	1
2	229318	Grease	1
3	229328	Bracket ASM-Camshaft	1
4	229329	Air Chamber - 30''	1
5	229330	Camshaft-(CCW)-Notch	1
6	229319	Cap - Plastic, LMS Grease Cap	2
7	229320	Module-Hardware-LMS (Cast Spider)	1
8	229331	Module-Roller/Spring	1
9	229321	Module-Dustshield	1
10	217414	Shoe / Lining ASM	2
11	229332	Slack ADJ	1
12	229333	Spider + Pin Assembly (CCW)	1

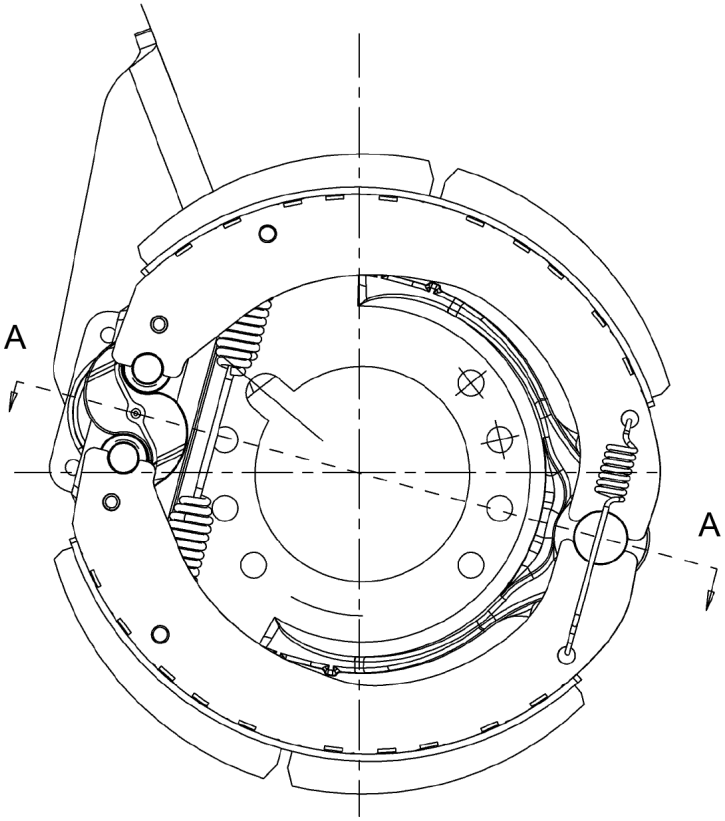

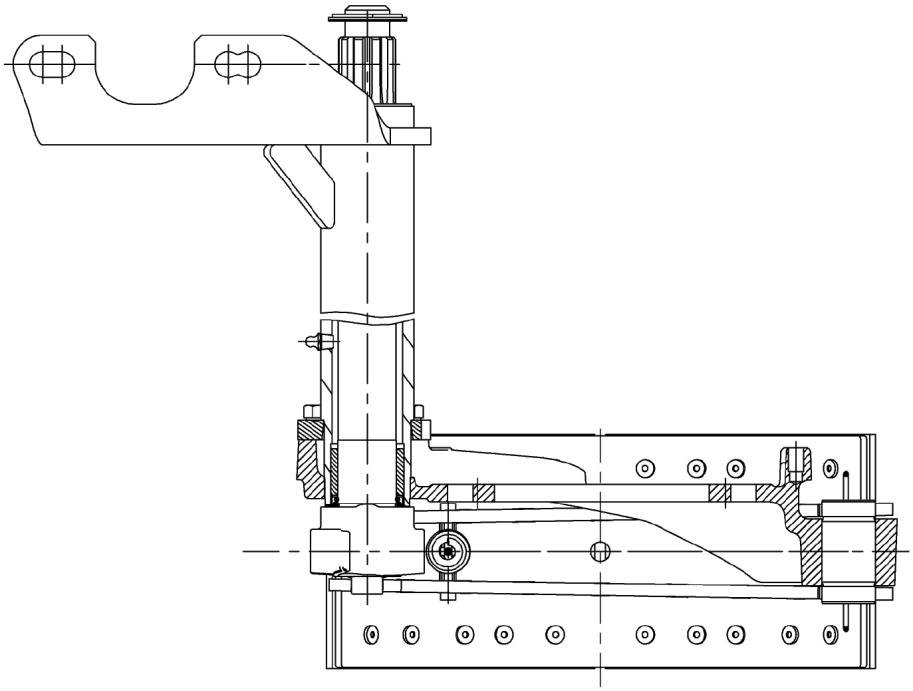

SECTION A - A

REF	PART NO.	DESCRIPTION	QTY
	225031 (Rev. 00)	*Brake ASM - ES16507D LMS (RH)*	
1	229327	Kit-Slack Anchoring	1
2	229318	Grease	1
3	229340	Bracket ASM-Camshaft	1
4	229329	Air Chamber - 30''	1
5	229335	Camshaft-(CW)-Notch	1
6	229319	Cap - Plastic, LMS Grease Cap	2
7	229320	Module-Hardware-LMS (Cast Spider)	1
8	229331	Module-Roller/Spring	1
9	229321	Module-Dustshield	1
10	217414	Shoe / Lining ASM	2
11	229332	Slack ADJ	1
12	229339	Spider + Pin ASSY	1
13	**228505**	Kit Assembly (see page 466)	REF

REF	PART NO.	DESCRIPTION	QTY
	228505 (Rev. 00)	*Kit Assembly*	
1	228518	Roller	2
2	228519	Retainer	2
3	228520	Spring	2
4	228521	Spring	1
5	228522	Spring Retaining	2
6	217414	Shoe / Lining ASM	2

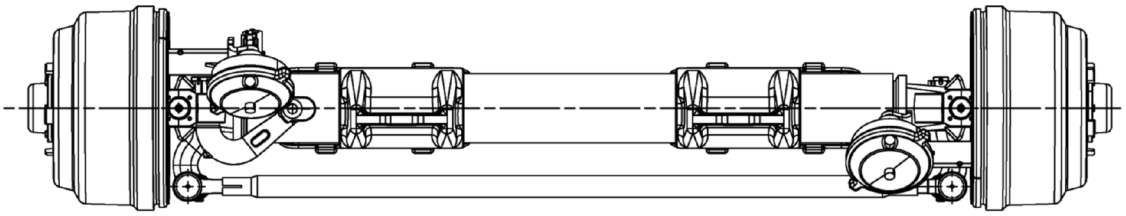

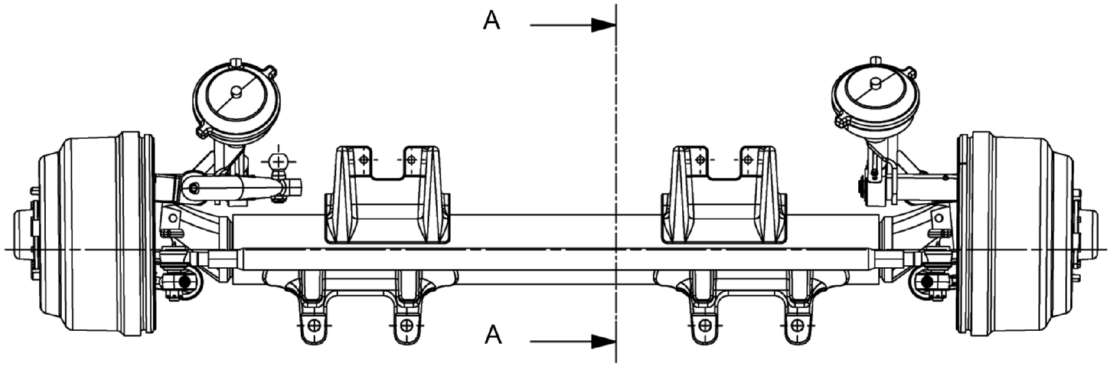

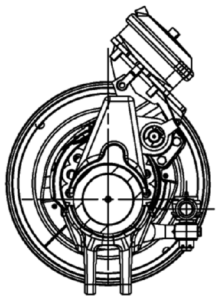

SECTION A-A

WHEN ORDERING PARTS, SPECIFY MODEL NUMBER, SERIAL NUMBER AND DESCRIPTION OF PARTS REQUIRED

REF	PART NO.	DESCRIPTION	QTY
	T127198 (Rev. A)	*Axle, Rear Steer*	
1	224290	Oil Seal	2
2	224330	Sensor Assembly	2
3	224331	Sleeve-Sensor Mounting	2
4	**225032**	Brake ASM - ES16507D LMS (LH) (see page 469)	1
5	**225033**	Brake ASM - ES16507D LMS (RH) (see page 471)	1
6	225448	Steer Axle Assembly - 24T2	1
7	224294	Chaveta Barra Dir	3
8	224295	Torn TAPA Ponta I-80	16
9	224296	Chaveta Brazo DIR	3
10	224297	Nut	2
11	224298	Washer	16
12	224299	Knuckle Pin	2
13	224300	Cotter Pin	2
14	224301	LAINA [0.0300] Punta ED E	1
15	224335	Knuckle Sub-Assembly	1
16	224336	Knuckle Sub-Assembly	1
17	224304	Ackermann Arm	1
18	224305	Ackermann Arm	1
19	225453	Steering Arm	1
20	224307	Knuckle Cap Assembly	4
21	224308	Draw Key	2
22	224309	Key Steer Arm & ACK Arm	3
23	224310	Laina [0.0050] PUNTA ED E	1
24	224311	Laina [0.0100] PUNTA ED E	3
25	224312	Washer Flat	2
26	224313	Gasket-Silastic (OZ)	4
27	224314	Grasa (OZ)	2
28	224315	Nut	2
29	224316	Nut	3
30	224318	Locknut	2
31	221968	Cross Link Assembly-72	1
32	224338	Axle Beam & BRKTS Assembly	1
33	224320	Ball Stud	1
34	224321	Nut-Ball Stud	1
35	224339	Stop Screw	2
36	224322	Rod CIL T188S Perno DIR ED	2
37	224325	Bearing Cone	2
38	225447	CONO RDC	2
39	224314	Grasa (OZ)	18
40	216793	Flat Washer	14
41	224327	Hub Cap Assembly	2
42	224328	Hub & Drum Assembly WEBB	2
43	224324	Bolt	14
44	216792	Nut-Lock	14
45	224329	Flange Nut Assembly	16

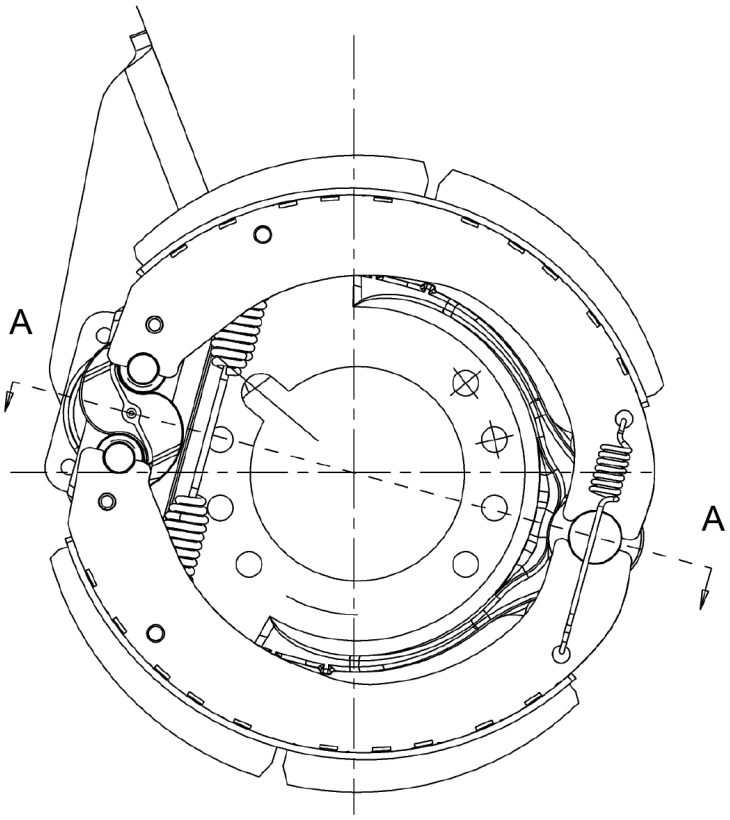

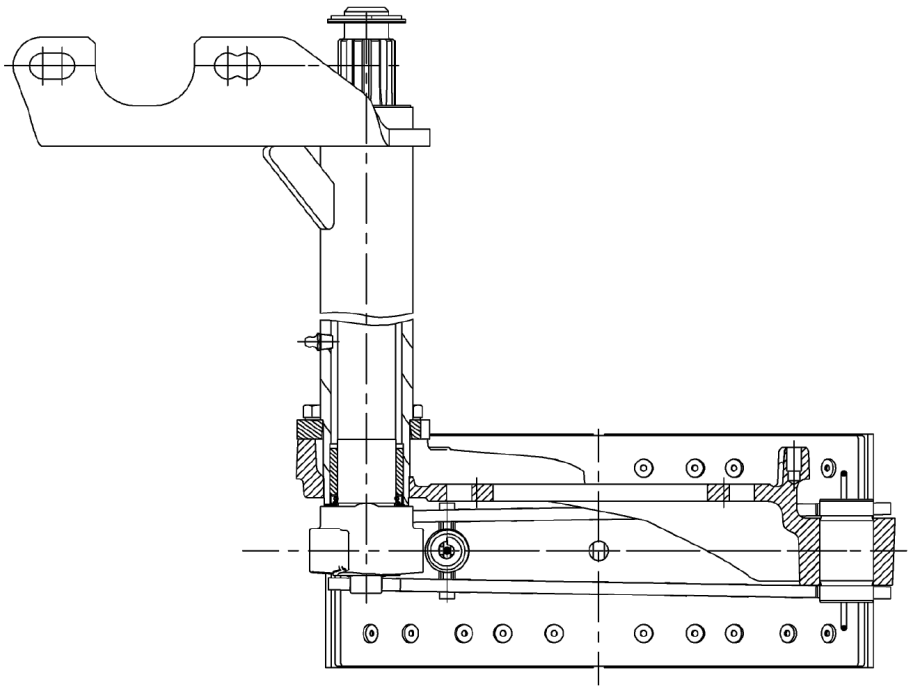

SECTION A - A

REF	PART NO.	DESCRIPTION	QTY
	225032 (Rev. 00)	*Brake ASM - ES16507D LMS (LH)*	
1	229327	Kit-Slack Anchoring	1
2	229318	Grease	1
3	229337	Bracket ASM-Camshaft	1
4	229329	Air Chamber - 30''	1
5	229319	Cap - Plastic, LMS Grease Cap	1
6	229319	Cap - Plastic, LMS Grease Cap	2
7	229320	Module-Hardware-LMS (Cast Spider)	1
8	229331	Module-Roller/Spring	1
9	229321	Module-Dustshield	1
10	217414	Shoe / Lining ASM	2
11	229332	Slack ADJ	1
12	229338	Spider + Pin ASSY	1
13	**228505**	Kit Assembly (see page 466)	REF

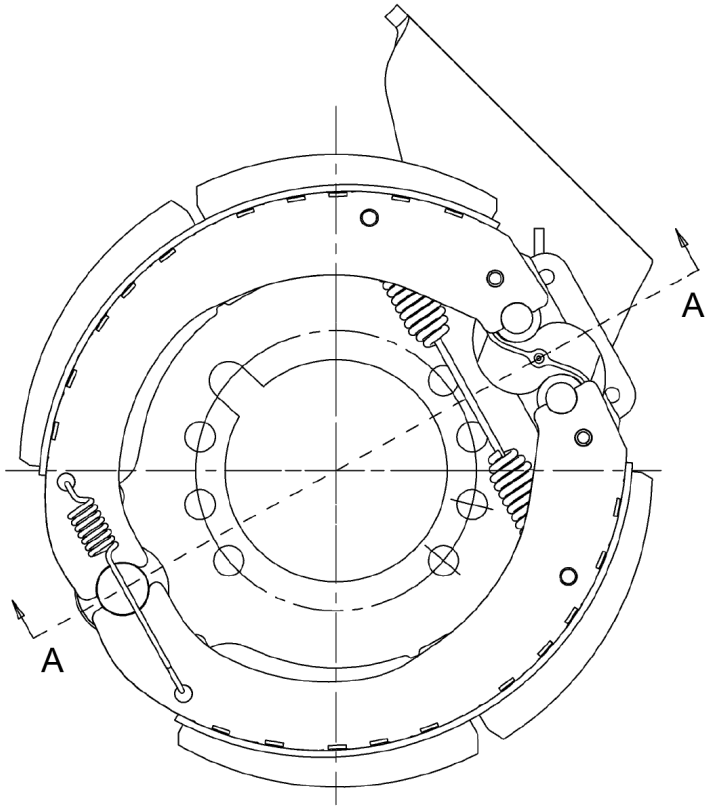

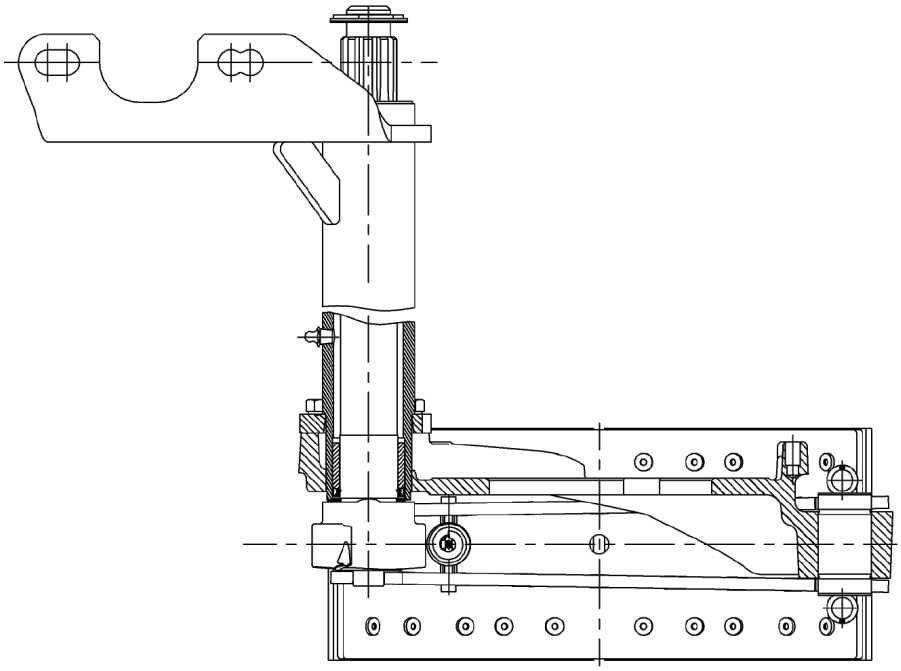

SECTION A - A

REF	PART NO.	DESCRIPTION	QTY
	225033 (Rev. 00)	*Brake ASM - ES16507D LMS (RH)*	
1	229327	Kit-Slack Anchoring	1
2	229318	Grease	1
3	229334	Bracket ASM-Camshaft	1
4	229329	Air Chamber - 30''	1
5	229335	Camshaft-(CW)-Notch	1
6	229319	Cap - Plastic, LMS Grease Cap	2
7	229320	Module-Hardware-LMS (Cast Spider)	1
8	229331	Module-Roller/Spring	1
9	229321	Module-Dustshield	1
10	217414	Shoe / Lining ASM	2
11	229332	Slack ADJ	1
12	229336	Spider + Pin Assembly (CW)	1
13	**228505**	Kit Assembly (see page 466)	REF

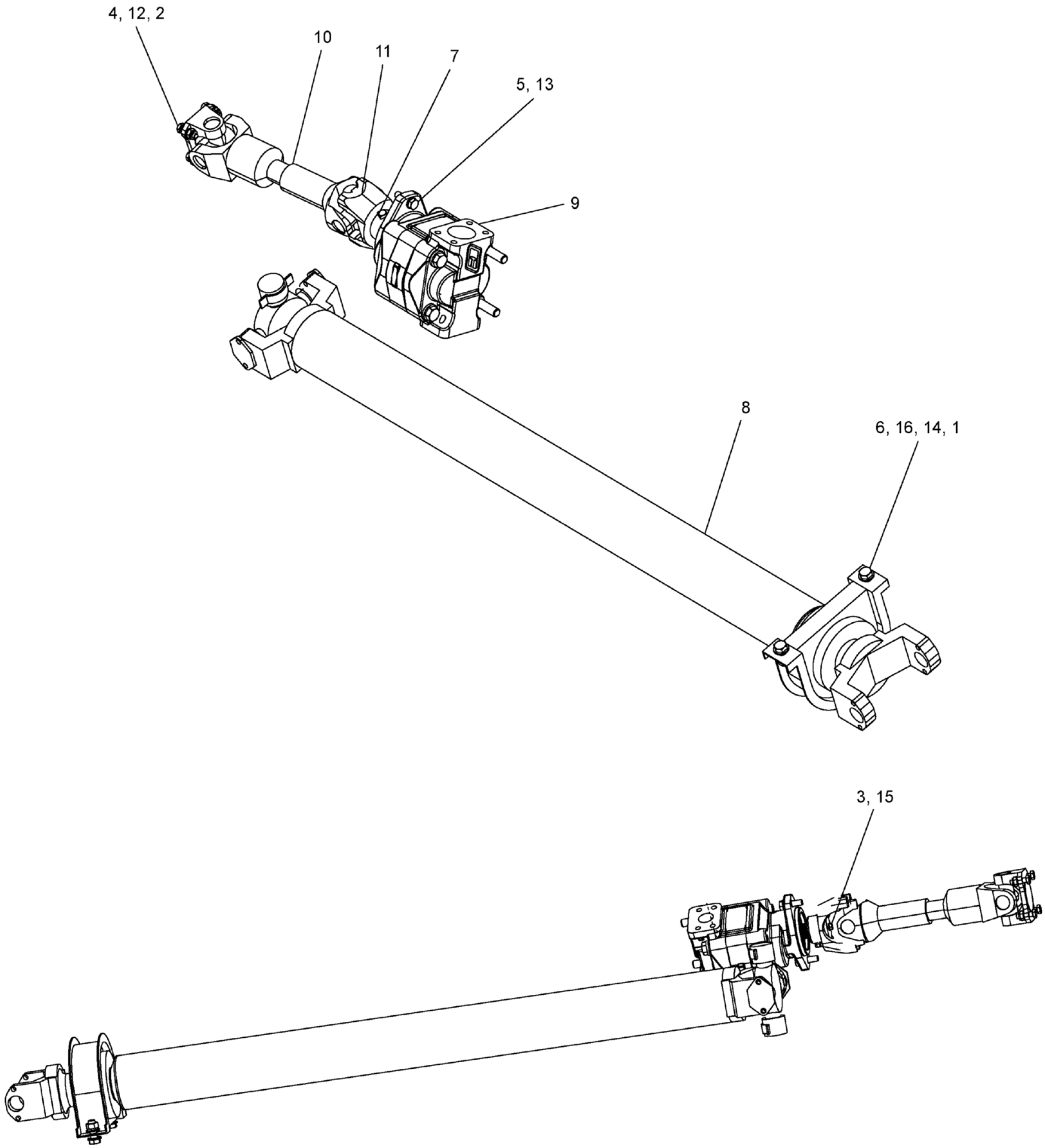

WHEN ORDERING PARTS, SPECIFY MODEL NUMBER, SERIAL NUMBER AND DESCRIPTION OF PARTS REQUIRED

LOAD KING BY CUSTOM TRUCK ONE SOURCE

DRIVE SHAFT ASSEMBLY

DATE: Released 08-2018

MODEL: 480-126

PAGE: 473

CHAPTER

2

REF	PART NO.	DESCRIPTION	QTY
	T136444 (Rev. B)	*T7 Drive Shaft Assembly*	
1	N24-14EM000-28	Nut, HEX M14-2, DIN 934, ST SQC C8.8	2
2	NYM-10CM000-Y8	Nut, NYL-INS M10-1.5, ST SQC G8	4
3	S07-08BM025-28	SCR, HHCS M8-1.25 X 25 PT, ST SQC C8.8	1
4	S07-10CM035-28	SCR, HHCS M10-1.5 X 35 PT, ST SQC C8.8	4
5	S07-12DM040-28	SCR, HHCS M12-1.75 X 40 PT, ST SQC C8.8	2
6	SMF-14EM040-28	SCR, HHCS M14-2 X 40 FT, ST SQC C8.8	2
7	T128171	Square Head SetScrew 3/8-16 X .750	2
8	T133086	Drive Shaft, Front	1
9	**T133561**	Pump, Hydraulic (see page 475)	1
10	**T136444-PTO Shaft**	PTO Shaft 1410 (see page 477)	1
11	**T136444-Yoke**	Yoke 1410 (see page 478)	1
12	W16-010X000-G2	WSH, Lock, SPLT M10 D127B, ST Z	4
13	W16-012X000-G2	WSH, Lock, SPLT M12 D127B, ST Z	2
14	W16-014X000-GP	WSH, Lock, SPLT M14 D127B, STL	2
15	W16-80MX000-G2	WSH, Lock, SPLT M8 D127B, ST Z	1
16	WMH-014X000-20	WSH, Flat, Hard M14 D125, ST SQC	4

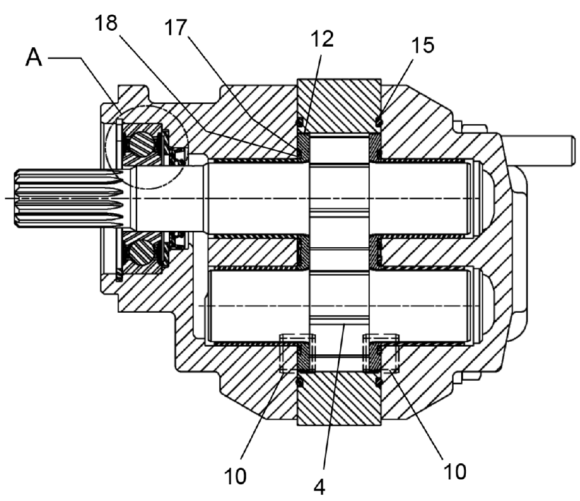

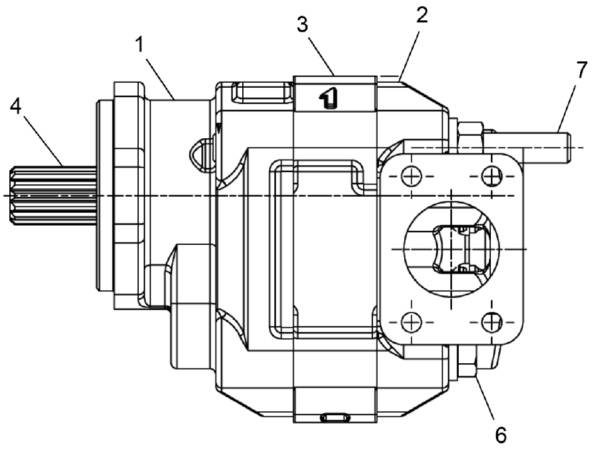

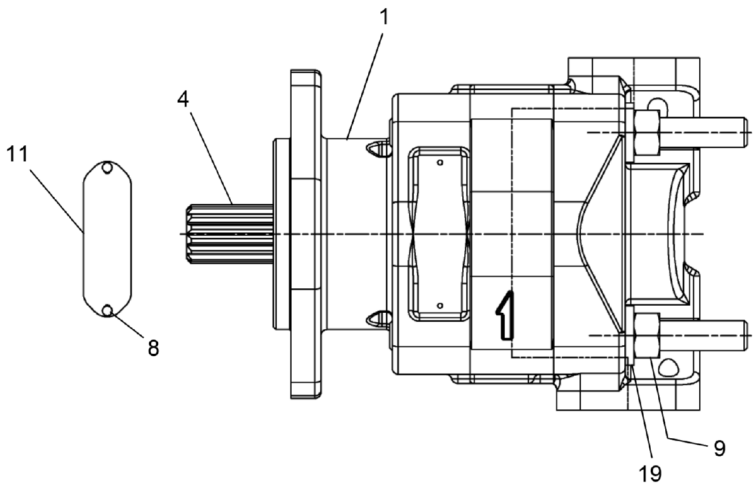

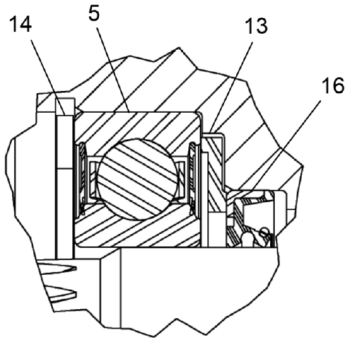

DETAIL A

REF	PART NO.	DESCRIPTION	QTY
	T133561 (Rev. A)	*Pump, Hydraulic*	
1	222965	Housing, SEC	1
2	227806	Housing, PEC	1
3	222968	Housing, Gear	1
4	227807	Set, Gear Shaft	1
5	227808	BRG, Ball	1
6	227809	Cap Screw	2
7	227810	Stud	2
8	221316	Screw, Drive	2
9	221285	Nut, HEX	2
10	217938	Pin, Dowel	8
11	220247	Name Plate	1
12	217934	THRPL	2
13	227811	RTNR, Seal	1
14	227812	Ring, Snap	1
15	217937	Seal, O-R	2
16	217933	Seal, Lip	1
17	217935	Seal, Chan	2
18	217936	Seal, BK-Up	2
19	218937	Washer	4

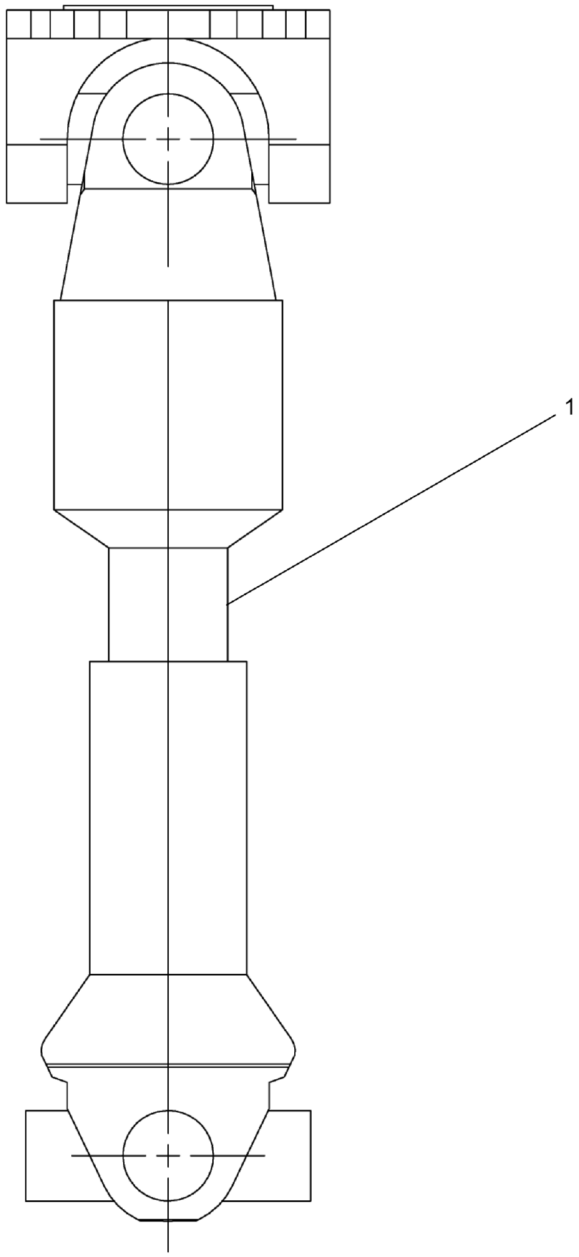

REF	PART NO.	DESCRIPTION	QTY
	T136444-PTO Shaft (Rev. 00)	*PTO Shaft 1410*	
1	T134125	PTO Shaft 1410	1

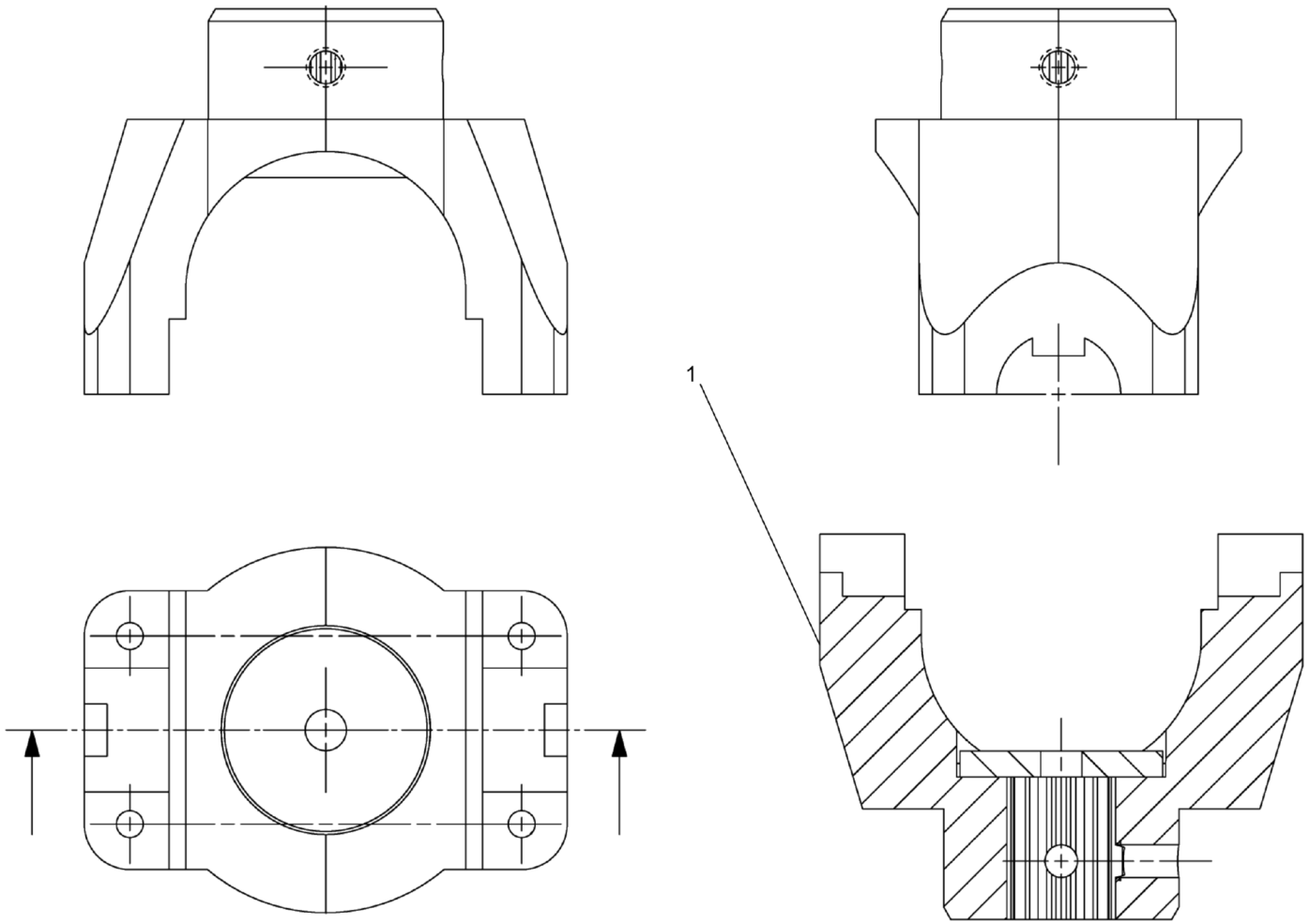

REF	PART NO.	DESCRIPTION	QTY
	T136444-Yoke (Rev. 00)	*Yoke 1410*	
1	T134280	Yoke 1410	1

WHEN ORDERING PARTS, SPECIFY MODEL NUMBER, SERIAL NUMBER AND DESCRIPTION OF PARTS REQUIRED

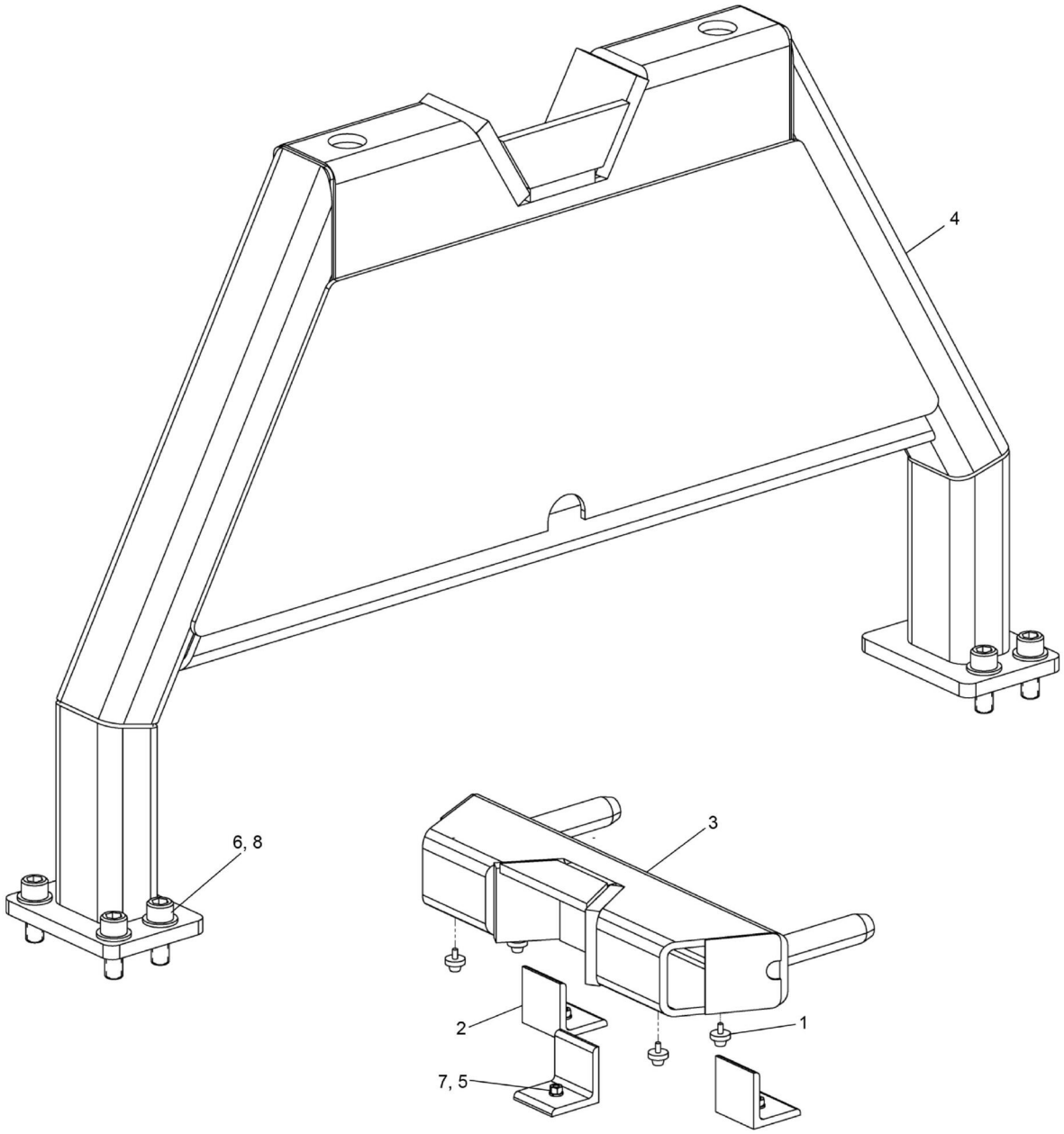

REF	PART NO.	DESCRIPTION	QTY
	722A0247 (Rev. A)	*Boom Rack Assembly*	
1	714-0770	Bumper, Rubber	4
2	718-0396	Angle	3
3	718F0588	Support Pedestal	1
4	718F1049	Boom Rack	1
5	N04-375C000-2A	Nut, HEX 0.375-16, ST Z GRA	3
6	S14-750CB00-H2	SCR, SHCS 0.75-10 X 2.00, ST SQC	6
7	W07-375X000-20	Washer Lock 3/8 MED	3
8	WAH-75NX000-Y2	WSH, FL HRD A-NRW 0.75, ST YZ	6

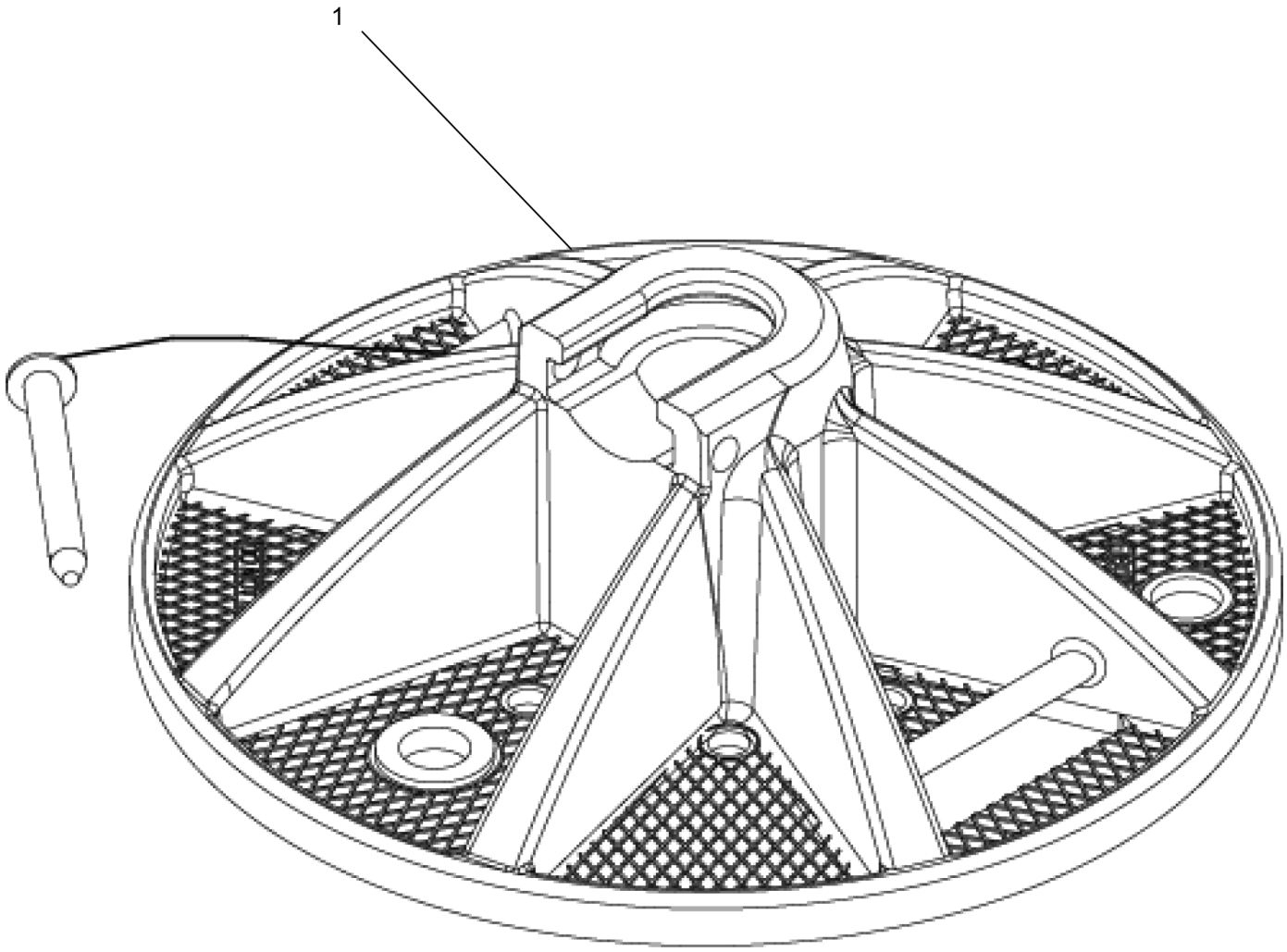

REF	PART NO.	DESCRIPTION	QTY
	718A0805 (Rev. A)	*Outrigger Pad Assembly*	
1	718 0751	Pad Outrigger 24"	4

CHAPTER NO. 3

OPTIONAL EQUIPMENT

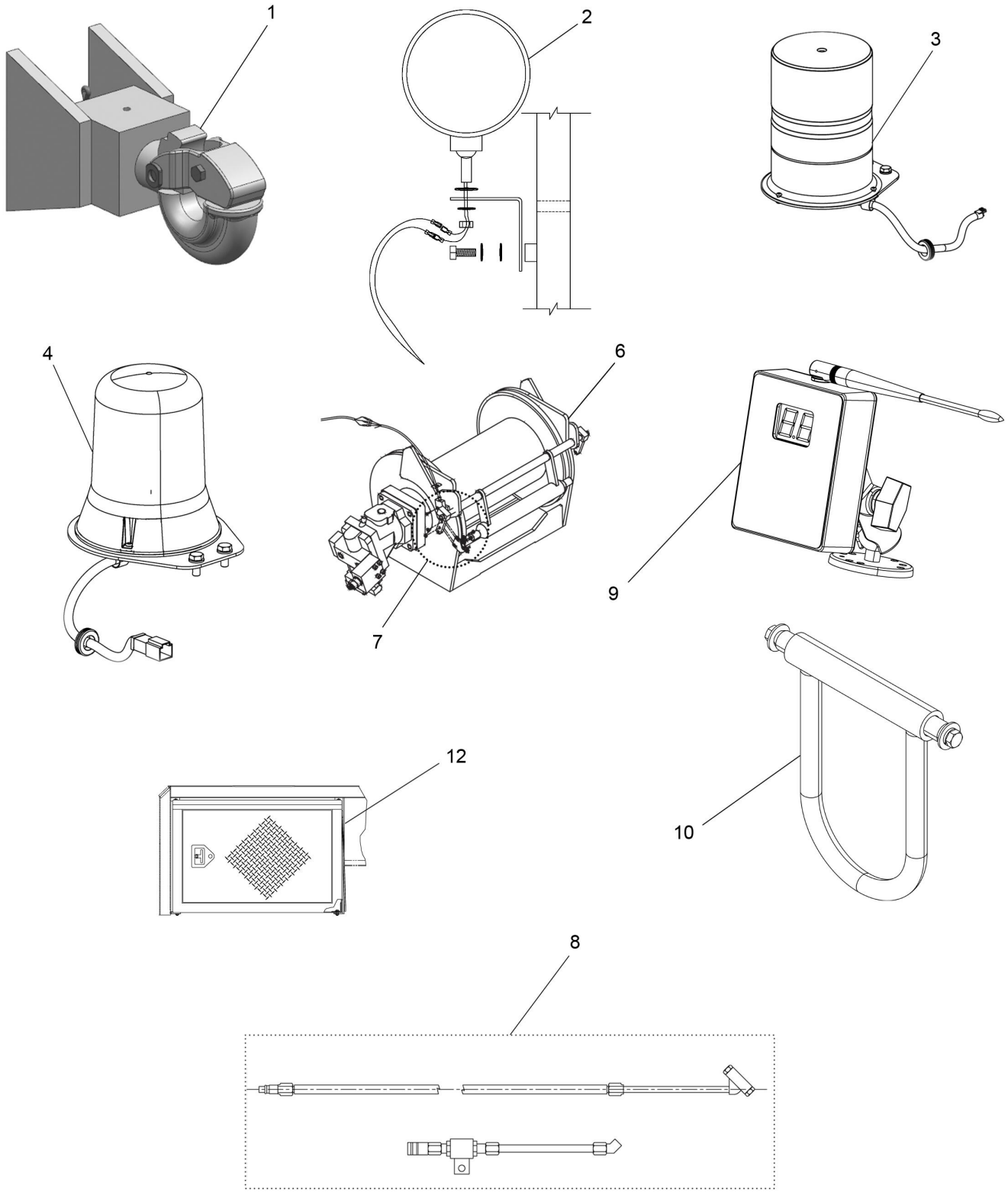

WHEN ORDERING PARTS, SPECIFY MODEL NUMBER, SERIAL NUMBER AND DESCRIPTION OF PARTS REQUIRED

REF	PART NO.	DESCRIPTION	QTY
	480-126-2017-OPT-EQUIP* (Rev. 00)	*OPTIONAL EQUIPMENT*	
1	**709A2954**	Pintle Hook Assembly (see page 485)	1
2	**T117513**	Assembly, Work Light (see page 486)	1
3	**719A0942**	Strobe Light, Yellow (see page 488)	1
4	**719A0915**	Revolving Amber Light (see page 489)	1
5**	**707A5736**	360° Spotlight (see page 490)	1
6	**722A0007**	Auxiliary Winch Assembly (Braden) (see page 491)	1
7	**718A0947**	3RD Wrap Indicator (Main/Aux Winch) (see page 498)	1
8	**717A1263**	Kit, Tire Inflation (see page 501)	1
9	**T103540**	Wind Speed Sensor (see page 504)	1
10	**717A0397**	Tie Down Assembly (see page 505)	1
11**	**T130435**	Emergency Air Shutoff Kit (see page 506)	1
12	**480-126-2017-COLD START***	Cold Start Options (see page 511)	REF
13**	**T150057**	Remote Drive Assembly (see page 513)	1
14**	**722A0103**	Boom Dolly Assembly (see page 529)	1
15**	**718A0699**	Remote Outrigger ASSY (see page 538)	1
16**	**718A0627**	Wheel & Tire Assembly, 445/65R22.5 (see page 539)	1
17**	**718A0611**	Wheel & Tire Assembly, 315/80R22.5 (see page 540)	1

* NOT PURCHASABLE AT THIS LEVEL.
** ITEM NOT SHOWN IN ILLUSTRATION.

WHEN ORDERING PARTS, SPECIFY MODEL NUMBER, SERIAL NUMBER AND DESCRIPTION OF PARTS REQUIRED

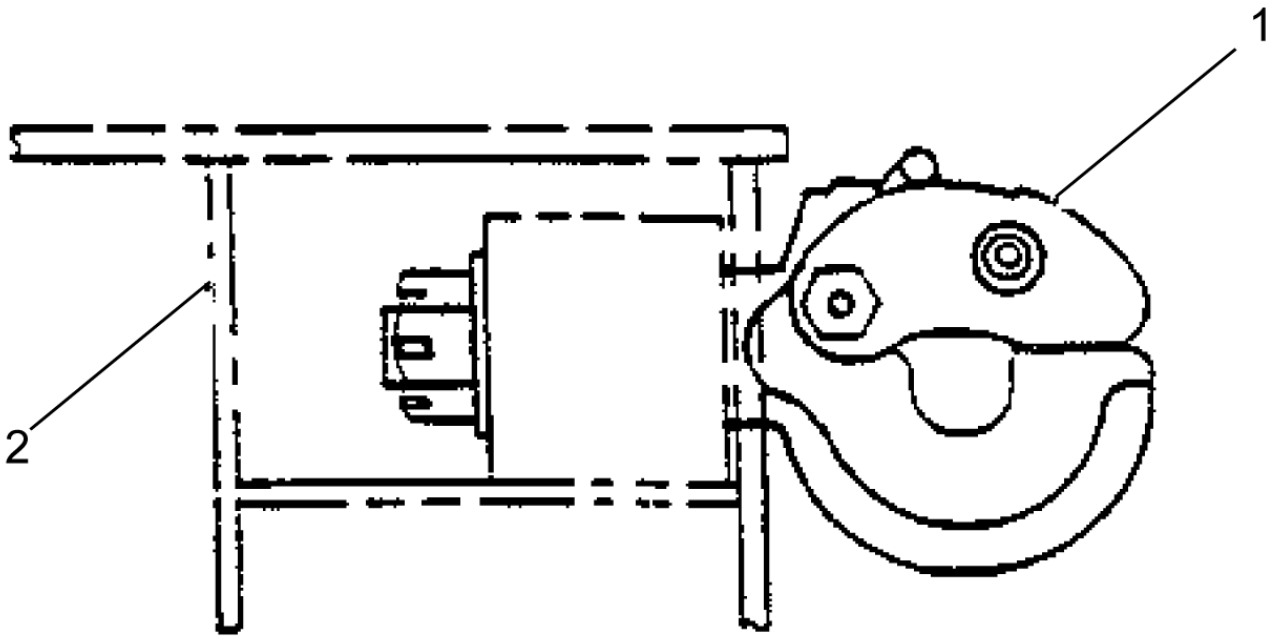

REF	PART NO.	DESCRIPTION	QTY
	709A2954 (Rev. 00)	*Pintle Hook Assembly*	
1	714 1516	Hook, Pintle	1
2	709F2955	Frame Rework	4

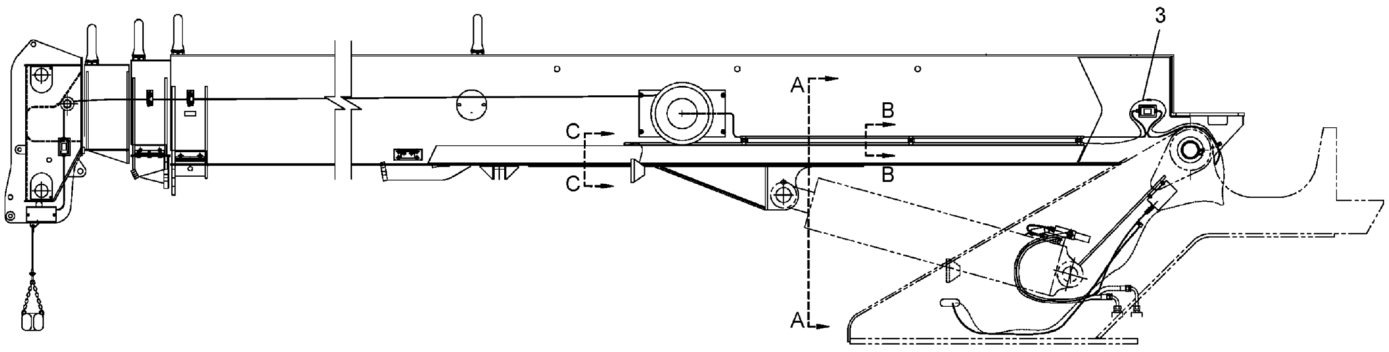

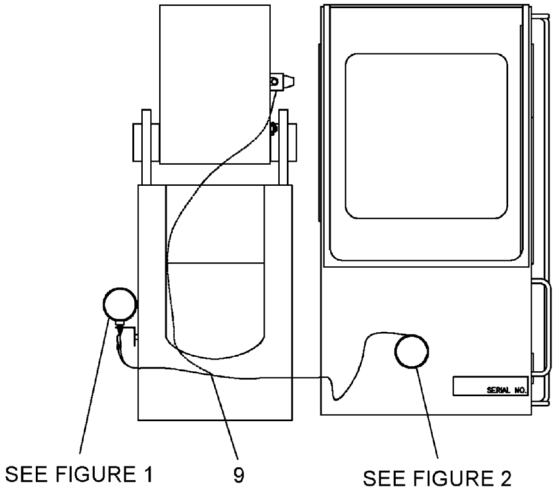

SECTION A - A

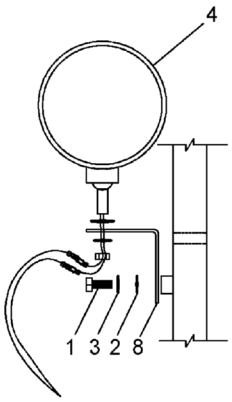

FIGURE 1

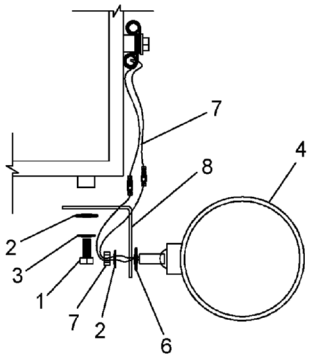

SECTION C - C

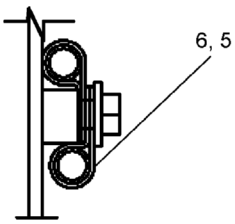

SECTION B - B

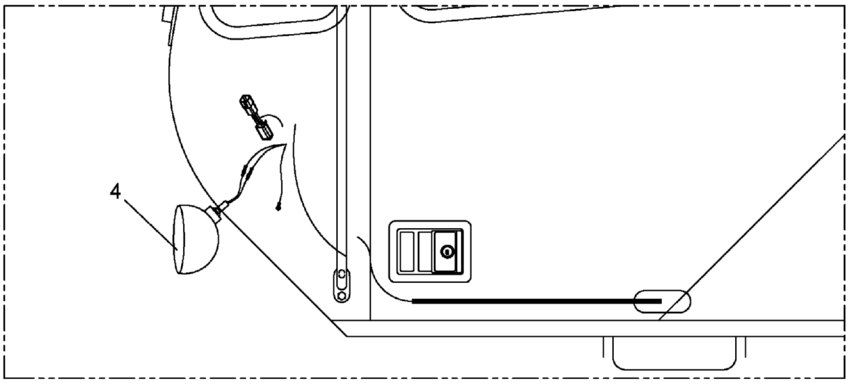

FIGURE 2

WHEN ORDERING PARTS, SPECIFY MODEL NUMBER, SERIAL NUMBER AND DESCRIPTION OF PARTS REQUIRED

REF	PART NO.	DESCRIPTION	QTY
	T117513 (Rev. D)	*Assembly, Work Light*	
1	SHF-375C750-25	SCR, HHCS FT 0.375-16 X 0.75, STZ G5	2
2	WAW-31WX000-20	WSH, FL TYPA-WID 0.3125, ST SQC	2
3	W07-375X000-20	Washer Lock 3/8 MED	2
4	1223-1067	Work Light	3
5	200B2007-4	Clamp, MED, 1/2 ID	3
6	206F4255	Tube 0.5 X 0.049 X 120, 501 Zinc Plated	1
7	707 4552	Harness, Worklight option	2
8	707 4688	Bracket, A.C.	2
9	T116824	Harness, Work Light	1
10*	1223-1012	Switch, Work Lights, Rocker	1

* ITEM NOT SHOWN IN ILLUSTRATION

WHEN ORDERING PARTS, SPECIFY MODEL NUMBER, SERIAL NUMBER AND DESCRIPTION OF PARTS REQUIRED

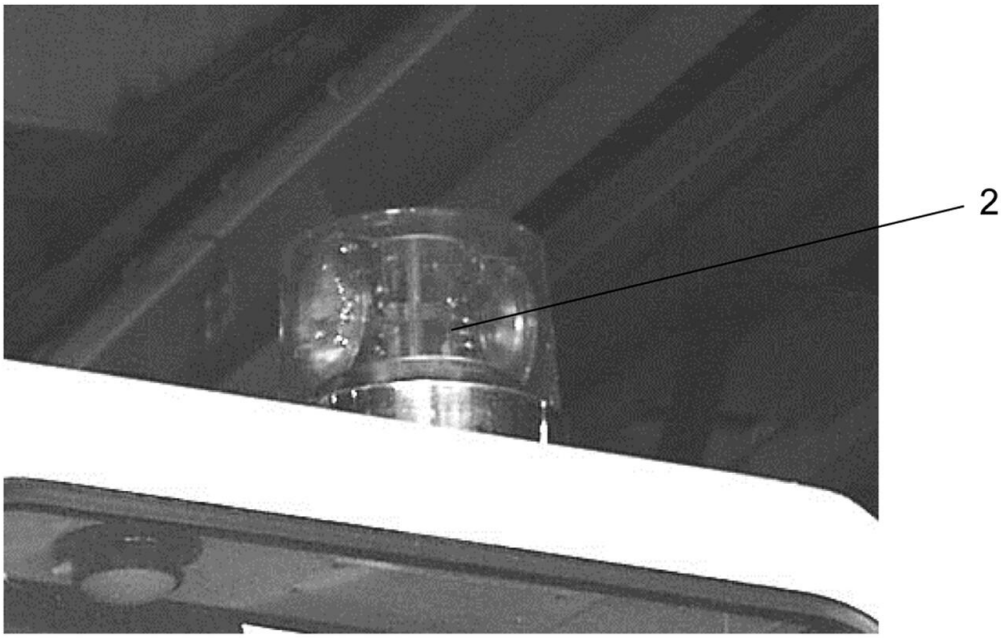

REF	PART NO.	DESCRIPTION	QTY
	719A0942 (Rev. 00)	*Strobe Light, Yellow*	
1*	1223-1026	Switch, Beacon	1
2	420 4974	Light, Strobe	1

* ITEM NOT SHOWN IN ILLUSTRATION

WHEN ORDERING PARTS, SPECIFY MODEL NUMBER, SERIAL NUMBER AND DESCRIPTION OF PARTS REQUIRED

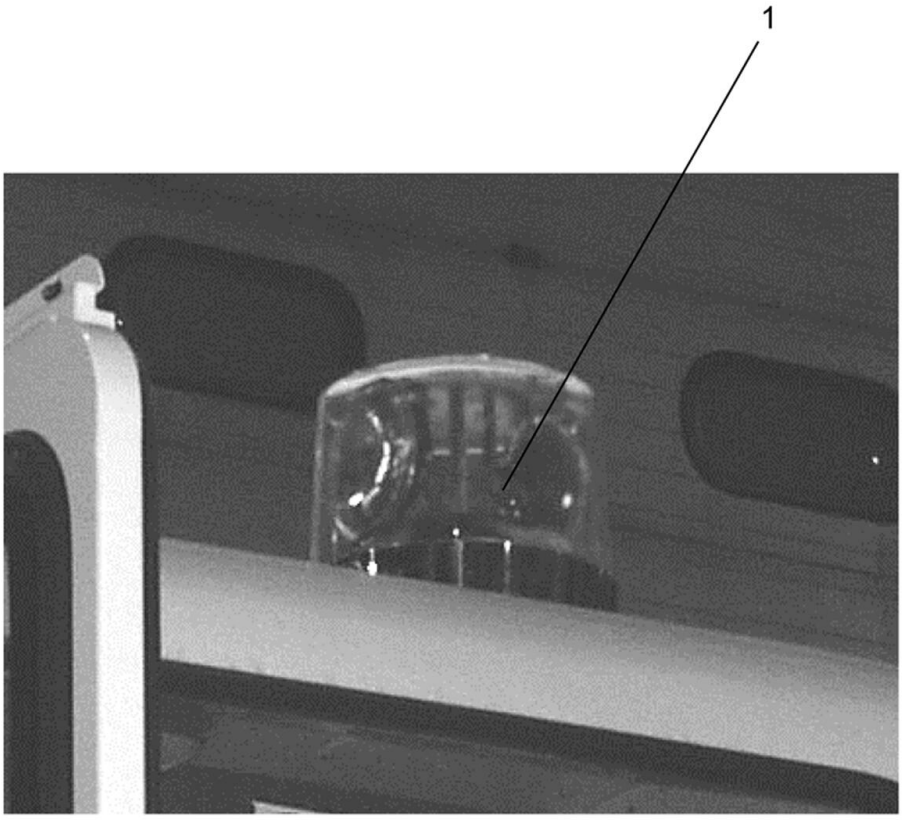

REF	PART NO.	DESCRIPTION	QTY
	719A0915 (Rev. 00)	*Revolving Amber Light*	
1	1223-505	Light, Amber	1
2*	1223-1026	Switch, Beacon	1

* ITEM NOT SHOWN IN ILLUSTRATION

WHEN ORDERING PARTS, SPECIFY MODEL NUMBER, SERIAL NUMBER AND DESCRIPTION OF PARTS REQUIRED

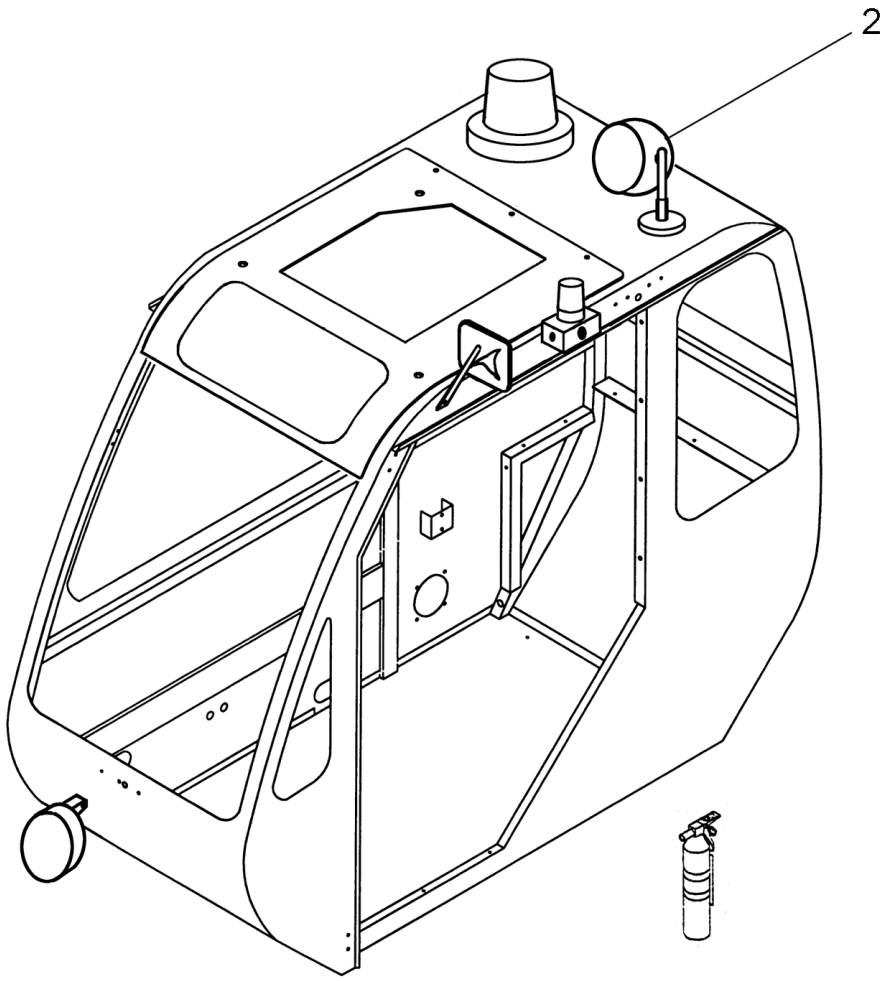

REF	PART NO.	DESCRIPTION	QTY
	707A5736 (Rev. A)	*360° Spotlight*	
1*	SL3-190XA00-20	Screw, Sheet Metal #10-12, STZ	2
2	707 5460	Spotlight BALKAMP 7301506	1

* ITEM NOT SHOWN IN ILLUSTRATION

WHEN ORDERING PARTS, SPECIFY MODEL NUMBER, SERIAL NUMBER AND DESCRIPTION OF PARTS REQUIRED

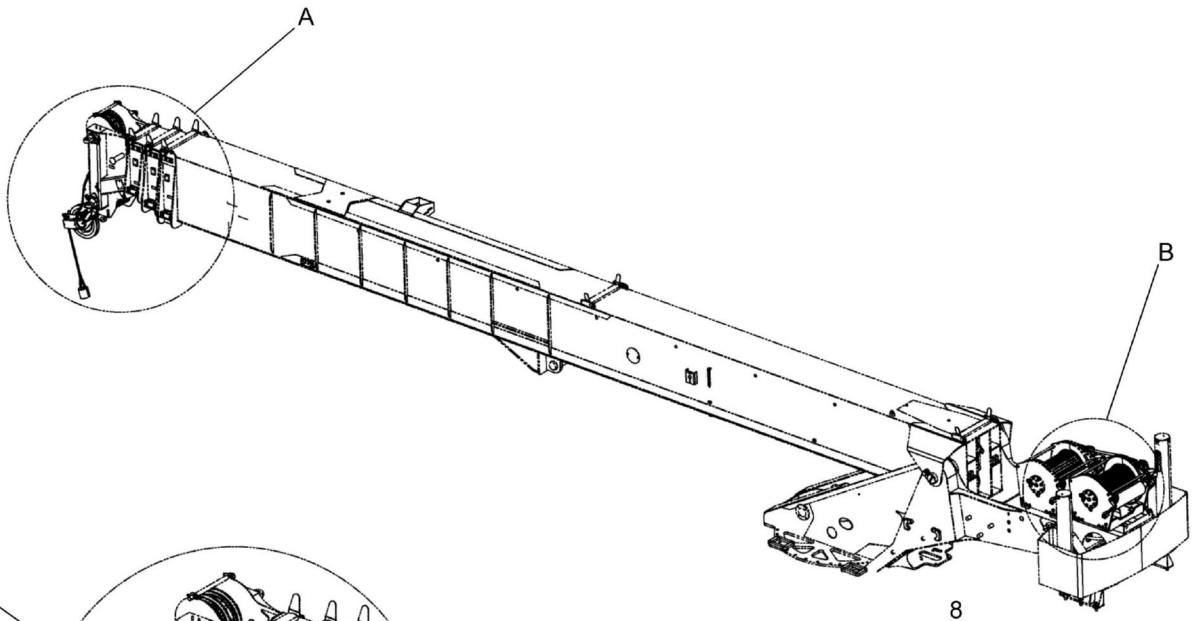

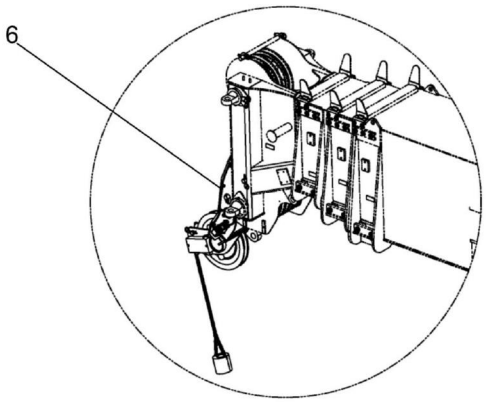

DETAIL A

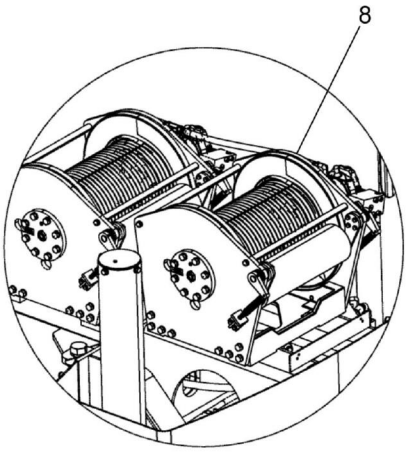

DETAIL B

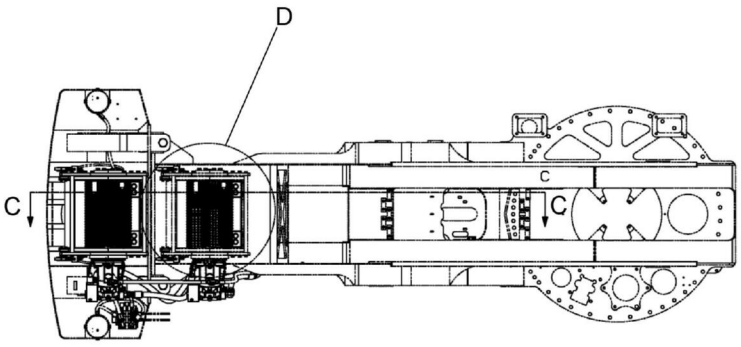

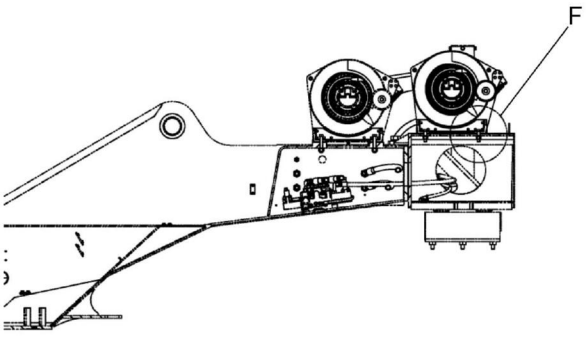

SECTION C-C

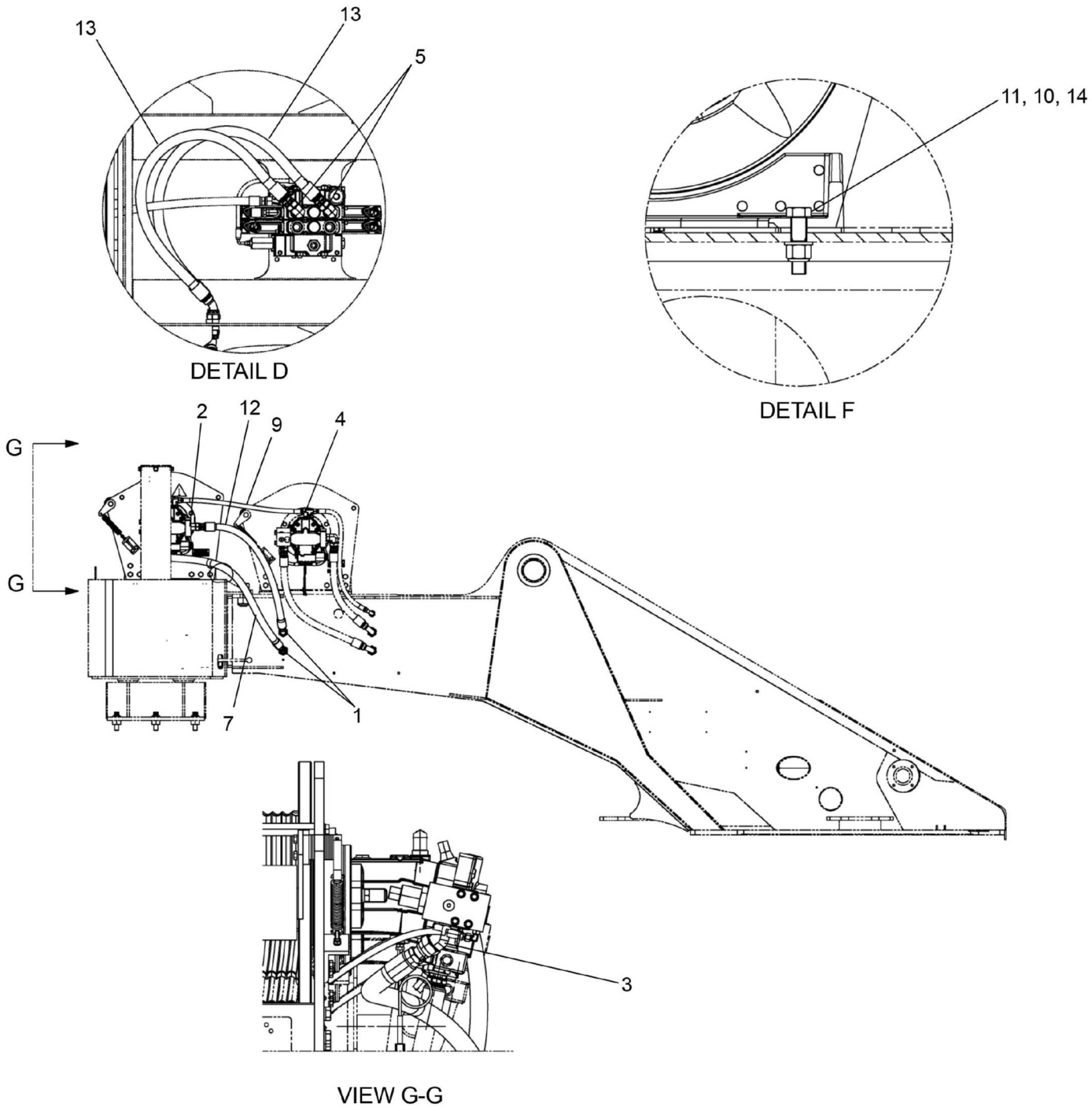
13
13
5
DETAIL D
11, 10, 14
DETAIL F
G
G
2
12
9
4
7
1
3
VIEW G-G

REF	PART NO.	DESCRIPTION	QTY
	722A0007 (Rev. C)	*Auxiliary Winch Assembly (Braden)*	
1	12019-733	Adapter, BH, MOFS-16/MOFS-16	2
2	12019-734	Adapter, MOFS-16/MORB-12	1
3	12019-755	Elbow, 45, MOFS-16/MORB-12	1
4	12019-787	Tee, MJIC-10/MJIC-10/MORB-12	1
5	376-1002	Adapter, 90, -16	2
6	**718A0324**	AUX Sheave ASSY (see page 494)	1
7	720-0236-48	Hose, -16, FJIC-16SW/FJIC-16SW45	1
8	**720-0408**	Hydraulic Winch Assembly (Braden) (see page 45)	1
9	MK212109-31	Hose, -10,2 50, FJIC-10SW/FJIC-10SW	1
10	NYL-750C000-Y8	Nut, HEX NYL-INS 0.75-10,ST YZ G8	8
11	S01-750CC00-Y8	SCR, HHCS 0.75-10 X 3.00,ST YZ GR8	8
12	T133603	Hose, -16,5000, FOFS-16SW45/FOFS-16SW,1025	1
13	T144960	Hose,- 16, 5000,FOFS-16SW/FOFS-16SW45,1150	2
14	WAH-75NX000-Y2	WSH, FL HRD A-NRW 0.75, ST YZ	8

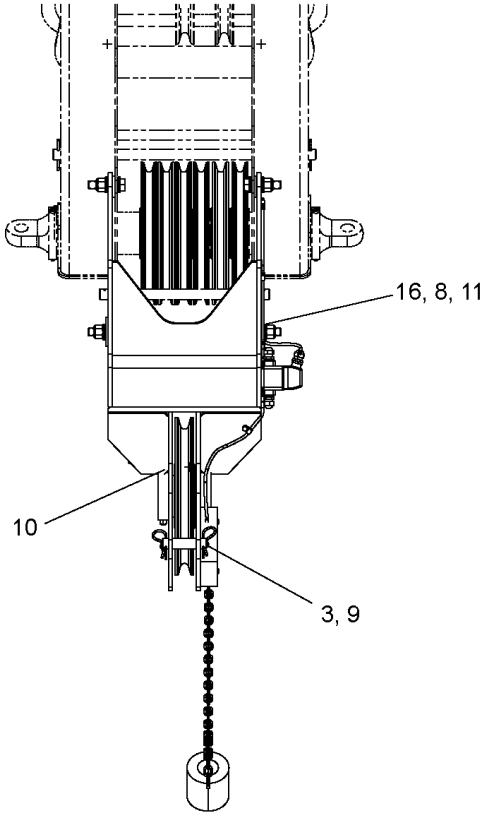

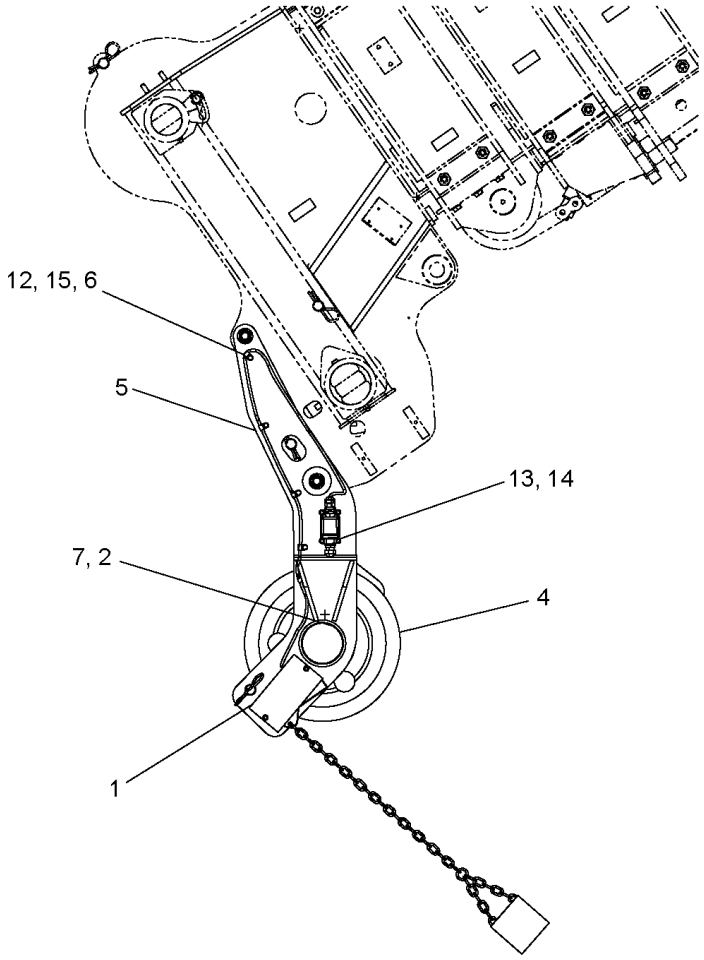

WHEN ORDERING PARTS, SPECIFY MODEL NUMBER, SERIAL NUMBER AND DESCRIPTION OF PARTS REQUIRED

REF	PART NO.	DESCRIPTION	QTY
	718A0324 (Rev. F)	*AUX Sheave ASSY*	
1	**706A8816**	Anti-Two Aux Sheave (see page 496)	1
2	718-0239	Shaft	1
3	718-0323	Pin	1
4	**718A0226**	Sheave Assy, 0.75 DIA Rope (see page 497)	1
5	718F0278	Bracket	1
6	MK765	Clamp, Rubber	5
7	NYL-375C000-25	Nut, HEX NYL-INS 0.375-16, ST SQC G5	1
8	NYL-750C000-25	Nut, HEX NYL-INS 0.75-10, ST SQC G5	4
9	PHP-178XC75-20	PIN, CTRHAIR 0.178 X 3.75 X 1.03, ST SQC	2
10	S01-375CE00-25	SCR, HHCS 0.375-16 X 5.00, ST SQC G5	1
11	S01-750CC00-Y8	SCR, HHCS 0.75-10 X 3.00,ST YZ GR8	4
12	SHF-250C500-25	SCR, HHCS FT 0.25-20 X 0.50, ST SQC G5	5
13	SMF-508M016-28	SCR, HHCS M5-0.8 X 16 FT, ST SQC C8.8	4
14	W07-190X000-20	WSH, LCK, MED SPLT 10, ST SQC	4
15	W07-250X000-20	WSH, LCK, MED SPLT 0.25, ST Z	5
16	WAH-75NX000-20	WSH, FL HRD A-NRW 0.75, ST SQC	12

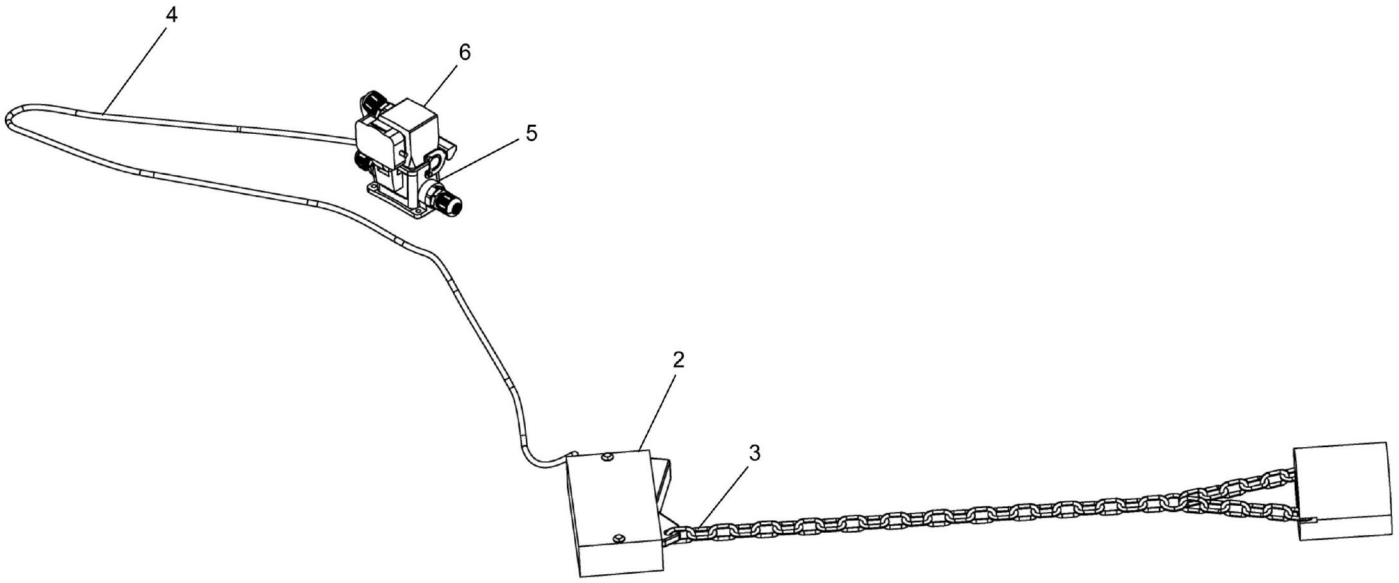

REF	PART NO.	DESCRIPTION	QTY
	706A8816 (Rev. A)	*Anti-Two Aux Sheave*	
1*	708-2982	Pad 1 X 1 X 1/4	1
2	709-7821	Switch	1
3	717-0882	Counterweight, W/Chain	1
4	T116674	Cable, 2 Conductor	1
5	T127374	Base, Weidmuller	1
6	T127379	Hood, Weidmuller	1

* ITEM NOT SHOWN IN ILLUSTRATION

WHEN ORDERING PARTS, SPECIFY MODEL NUMBER, SERIAL NUMBER AND DESCRIPTION OF PARTS REQUIRED

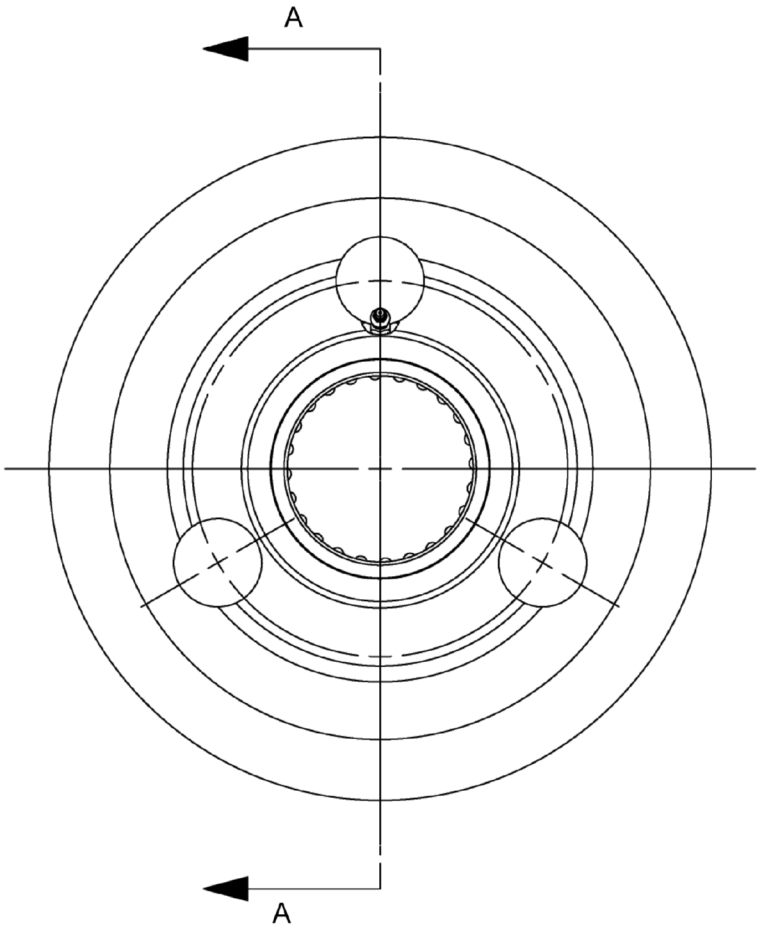

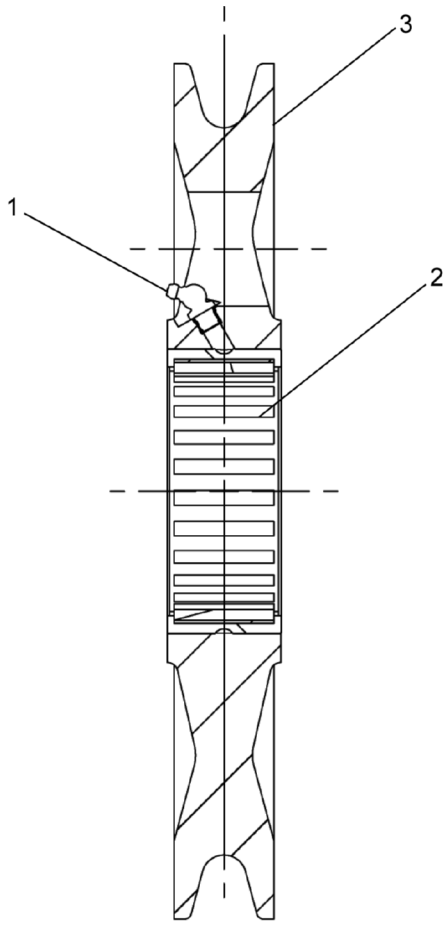

SECTION A-A

REF	PART NO.	DESCRIPTION	QTY
	718A0226 (Rev. B)	*Sheave Assy, 0.75 DIA Rope*	
1	1213-3	Fitting, Grease 1/8 45°	1
2	1217-360	Bearing ASSY, Outer, 4.00 Shaft	1
3	718-0225	Sheave, 0.75 DIA Rope	1

REF	PART NO.	DESCRIPTION	QTY
	718A0947 (Rev. A)	*3RD Wrap Indicator (Main/Aux Winch)*	
1	442-2201	Switch, Roller	1
2	**718-0948**	PD17 Roller Kit (Braden) (see page 499)	1

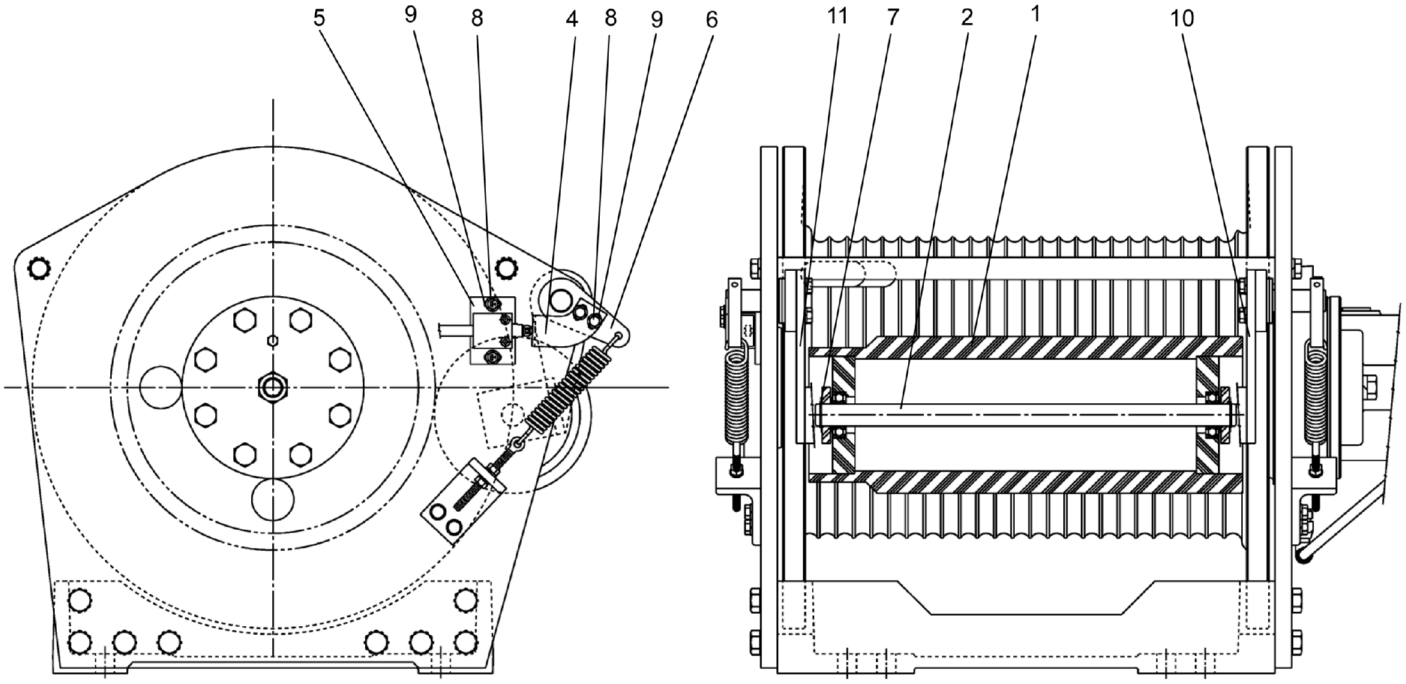
5
9
8
4
8
9
6
11
7
2
1
10

REF	PART NO.	DESCRIPTION	QTY
	718-0948 (Rev. 00)	*PD17 Roller Kit (Braden)*	
1	223074	Roller	1
2	220064	Shaft, Roller	1
3*	223075	1241004 BRG Ball	2
4	223076	Switch Bracket	1
5	219751	Switch Plate	1
6	223077	Lever Arm	1
7	223078	1941004 Snap Ring	2
8	219753	Capscrew	4
9	219754	Washer	4
10	223079	Arm, Roller	1
11	223080	Arm, Roller	1

* ITEM NOT SHOWN IN ILLUSTRATION

WHEN ORDERING PARTS, SPECIFY MODEL NUMBER, SERIAL NUMBER AND DESCRIPTION OF PARTS REQUIRED

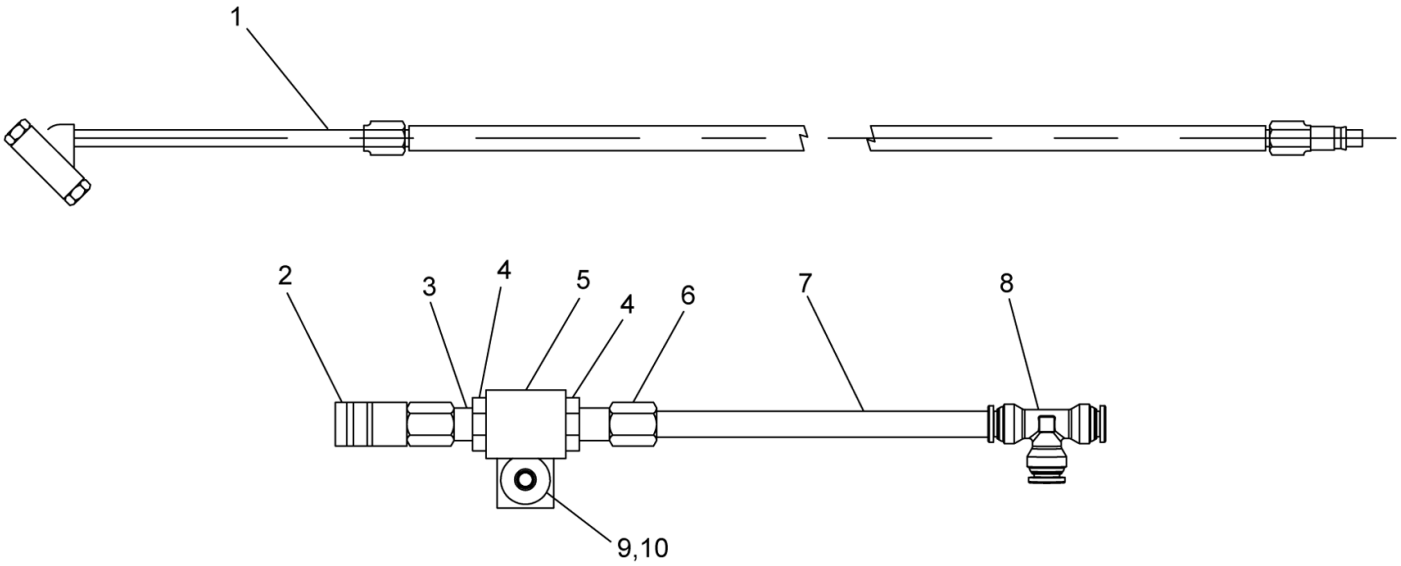

WHEN ORDERING PARTS, SPECIFY MODEL NUMBER, SERIAL NUMBER AND DESCRIPTION OF PARTS REQUIRED

REF	PART NO.	DESCRIPTION	QTY
	717A1263 (Rev. B)	*Kit, Tire Inflation*	
1	**714A1634**	Air Hose Assembly (see page 503)	1
2	707-5721	Coupler, 1/4" Female NPT	1
3	1219-954	Adapter, MNPT-4/MNPT-4	1
4	12019-181	Adapter, FNPT-4/MNPT-8	2
5	F52273	Coupline	1
6	T116916	Adapter, Male, -6 Tube, -4 Pipe	1
7	12203-27	Tube	1
8	T116559	TEE, PTC	1
9	WAW-31WX000-20	WSH, FL TYPA-WID 0.3125, ST SQC	1
10	NYL-312C000-25	Nut, HEX NYL-INS 0.312-18, ST SQC G5	1



REF	PART NO.	DESCRIPTION	QTY
	714A1634 (Rev. 00)	*Air Hose Assembly*	
1	707-5720	Nipple, 1/4" NPT	1
2	714-1635	Hose, Air	1
3	707-5722	Chuck, Air, 1/4" NPT	1

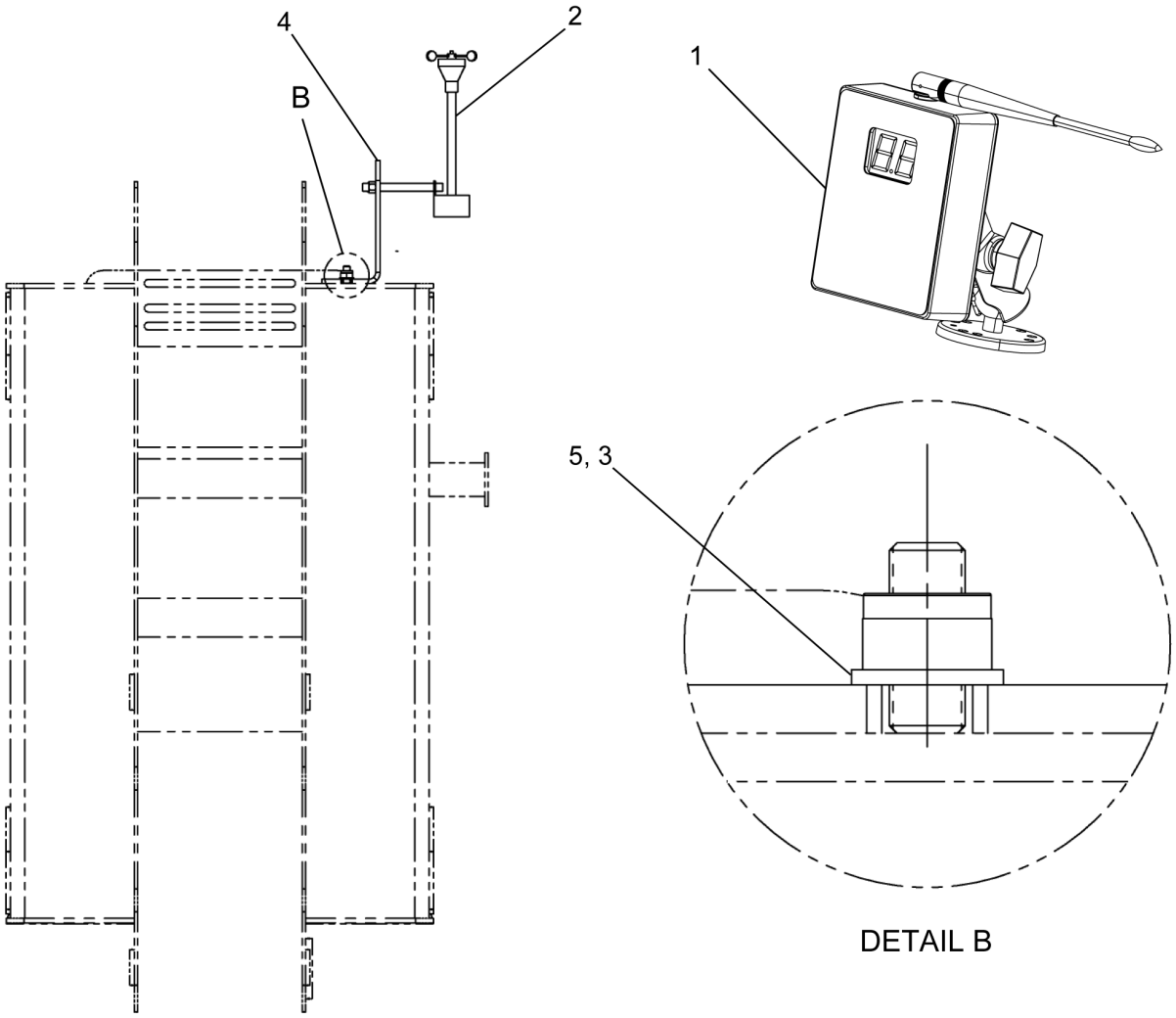

REF	PART NO.	DESCRIPTION	QTY
	T103540 (Rev. C)	*Wind Speed Sensor*	
1	714-1695	Wind Speed Display	1
2	714-1696	Wind Speed Sensor	1
3	NYM-10CM000-Y8	Nut, NYL-INS M10-1.5, ST SQC G8	2
4	T128170	Mounting Bracket	1
5	WMF-010X000-20	WSH, Flat M10 DIN125, ST SQC	2

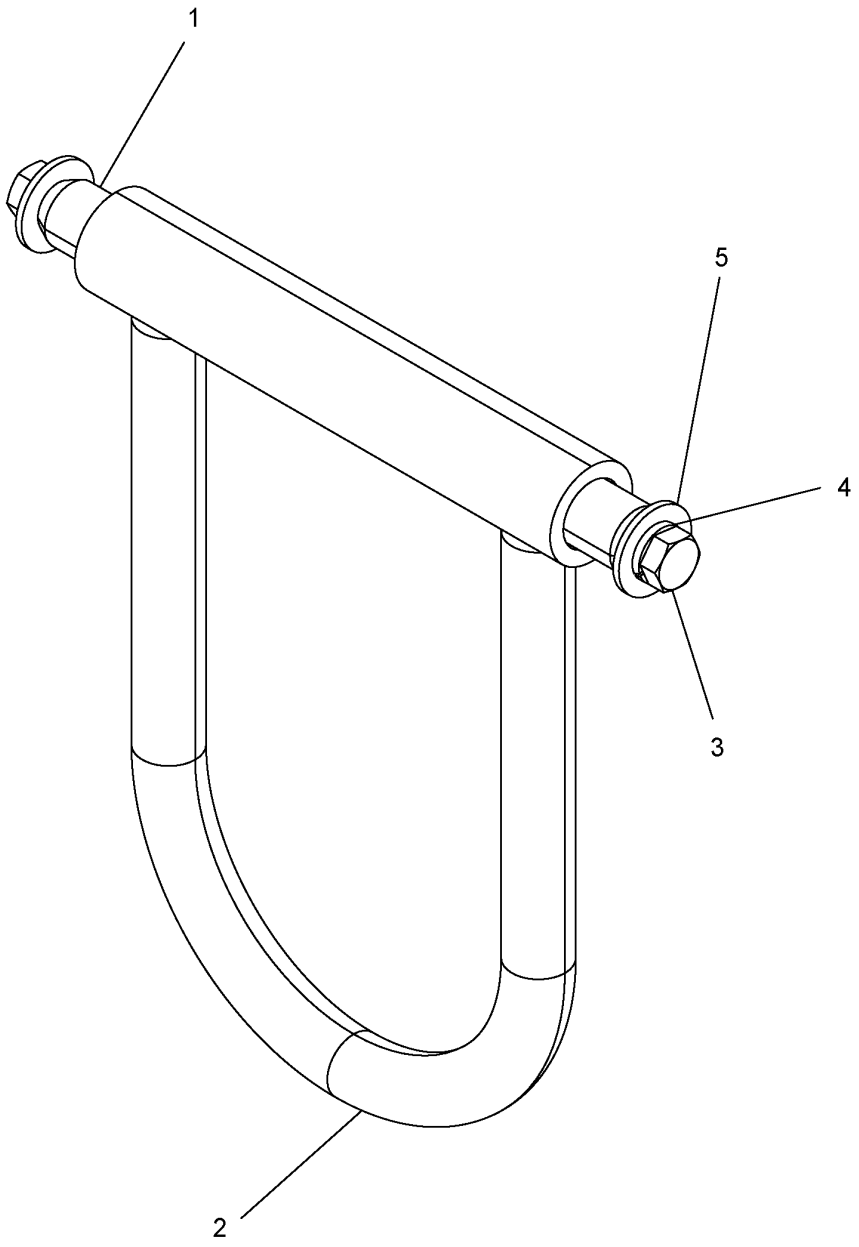

REF	PART NO.	DESCRIPTION	QTY
	717A0397 (Rev. A)	*Tie Down Assembly*	
1	717-0395	Pin	1
2	717F0391	Tie Down	1
3	SHF-500CA00-25	SCR, HHCS FT 0.50-13 X 1.00, ST SQC G5	2
4	W07-500X000-20	WSH, LCK, MED SPLT 0.50, ST SQC	2
5	WAW-50WX000-20	WSH, FL TYPA-WID 0.50, ST SQC	2

REF	PART NO.	DESCRIPTION	QTY
	T130435 (Rev. A)	*Emergency Air Shutoff Kit*	
1	**T130436**	Emergency Shutoff Setup (see page 507)	1
2	**T130543**	Air Shutoff Electrical Assembly (see page 509)	1
3	**T130551**	Switch, Revguard Speed (see page 510)	1
4	722 0253	Tube, CAC Upper	1

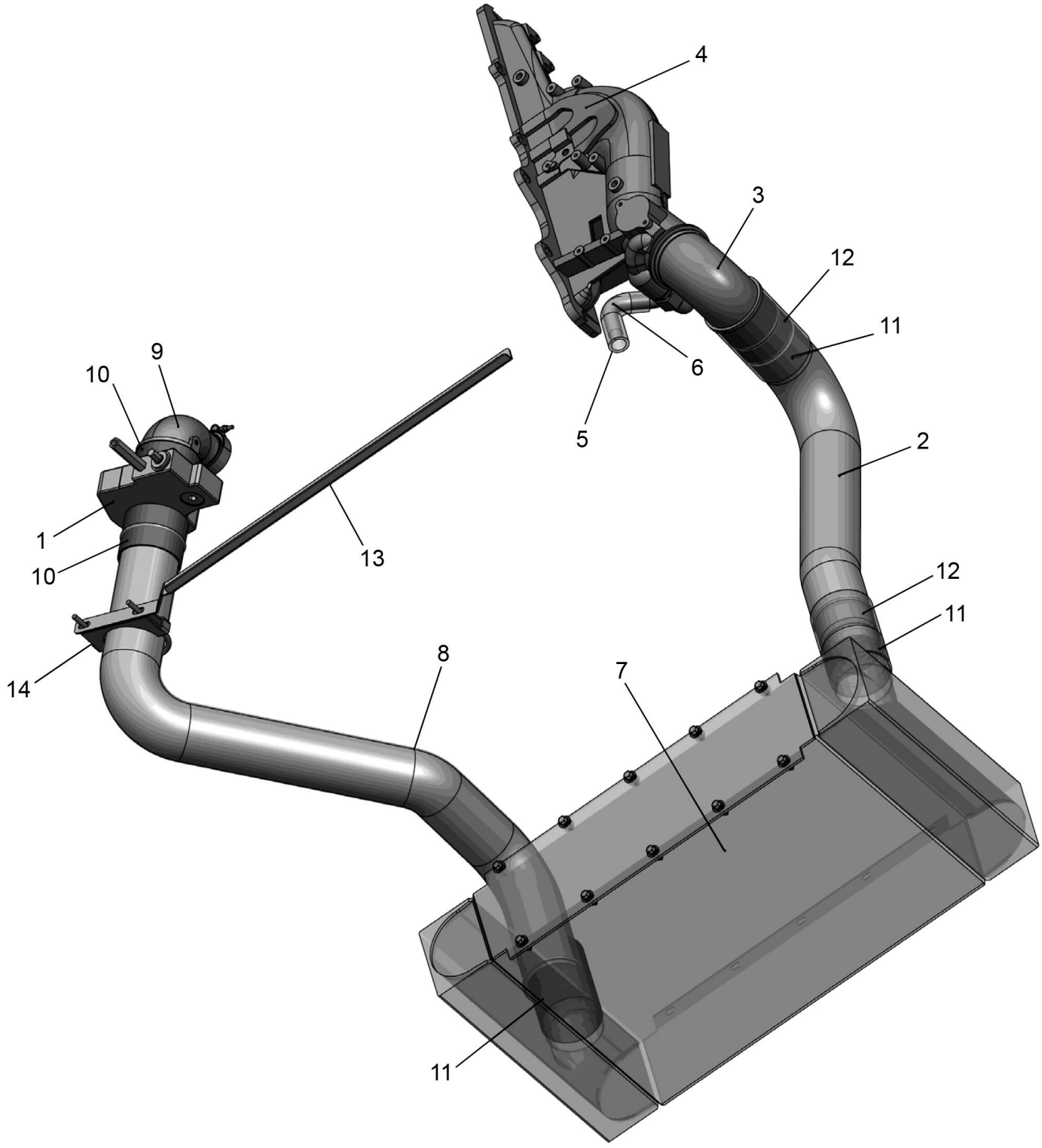

WHEN ORDERING PARTS, SPECIFY MODEL NUMBER, SERIAL NUMBER AND DESCRIPTION OF PARTS REQUIRED

REF	PART NO.	DESCRIPTION	QTY
	T130436 (Rev. A)	*Emergency Shutoff Setup*	
1	226015	Air Shutdown Device - Pneumatic	1
2	226016	Cold Side CAC Pipe	1
3	226017	Intake Connection Option	1
4	226018	Intake Manifold Option	1
5	226019	Compressor Inlet Option	1
6	226020	Air Compressor Inlet Pipe Reinforcement	1
7	226021	Charge Air Cooler	1
8	226022	Hot Side CAC Pipe	1
9	226023	Turbo Air Transfer Connection Option	1
10	222766	4.00" 4-PLY Turbocharger Hose (Config 325)	2
11	226024	4.00" 4-PLY Turbocharger Hose (Config 600)	3
12	226025	Spacer Ring	2
13	226026	Pipe Support Bracket	1
14	222616	4.00 Saddle Clamp	1

REF	PART NO.	DESCRIPTION	QTY
	T130543 (Rev. B)	*Air Shutoff Electrical Assembly*	
1	T122919	EI-Stop Harness	1
2	T109500	EI-Stop Switch	1
3	T130437	Harness, Air Shut Off	1
4	1223-981	EI-Stop Switch	1

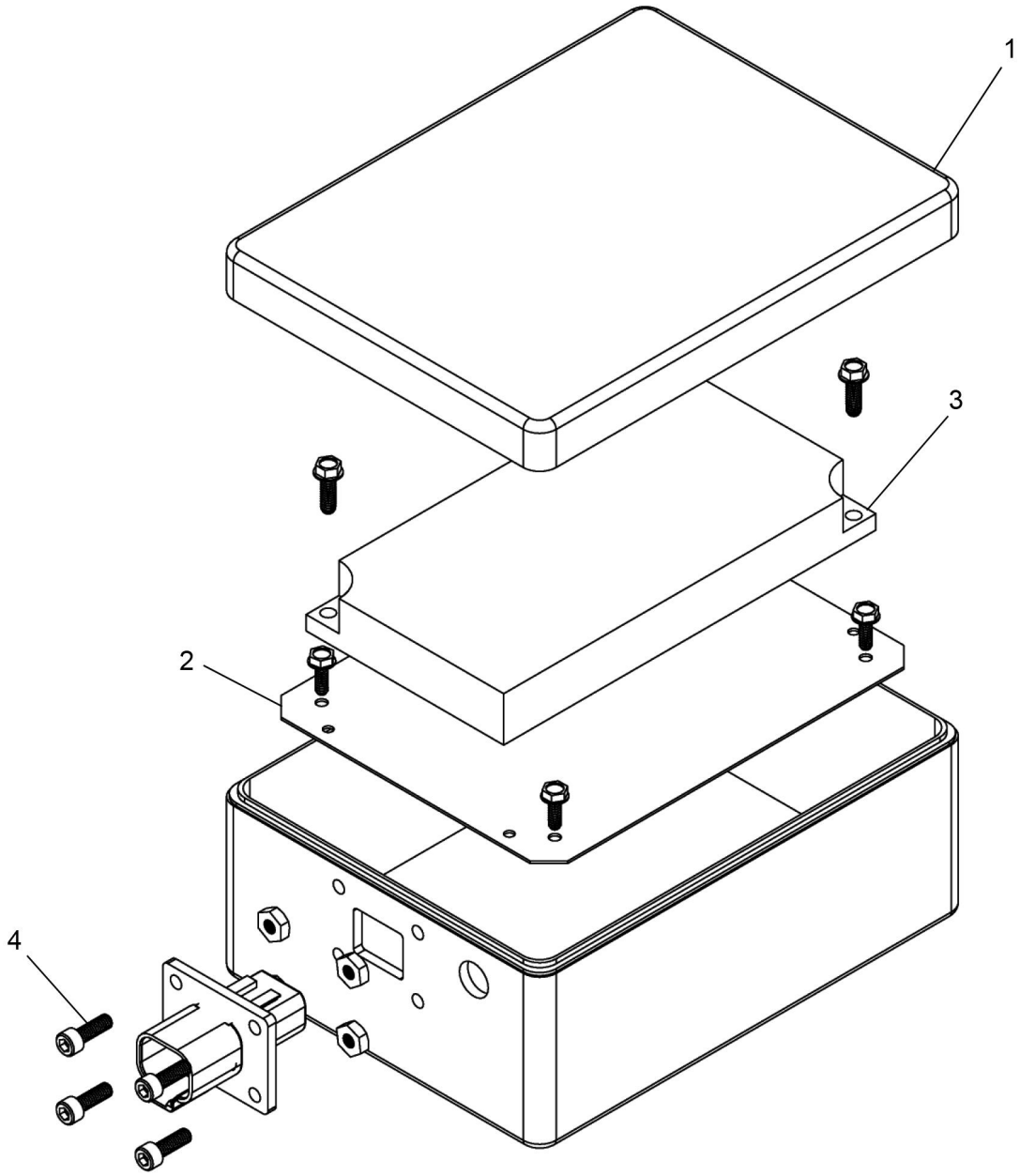

REF	PART NO.	DESCRIPTION	QTY
	T130551 (Rev. A)	*Switch, Revguard Speed*	
1	226356	Revguard Box	1
2	226357	Mounting Plate	1
3	226358	Revguard, Speed Switch	1
4	226359	Hardware Kit	1
5*	226360	Clear Circuit Breaker Boot	1
6*	226361	20A Panel Mount Circuit Breaker	1
7*	226362	Wire Harness	1

* ITEM NOT SHOWN IN ILLUSTRATION

WHEN ORDERING PARTS, SPECIFY MODEL NUMBER, SERIAL NUMBER AND DESCRIPTION OF PARTS REQUIRED

REF	PART NO.	DESCRIPTION	QTY
	480-126-2017-COLD START* (Rev. 00)	*Cold Start Options*	
1	717A0813	HYD Immersion Heater	1
1.1	**1223-1028**	Immersion Heater (see page 512)	1
1.2	1223-819	Connector	1
2	224749	DD13 Block Heater	1
3	224750	DD13 Engine Oil Immersion Heater, 450W 120V	1

* NOT PURCHASABLE AT THIS LEVEL

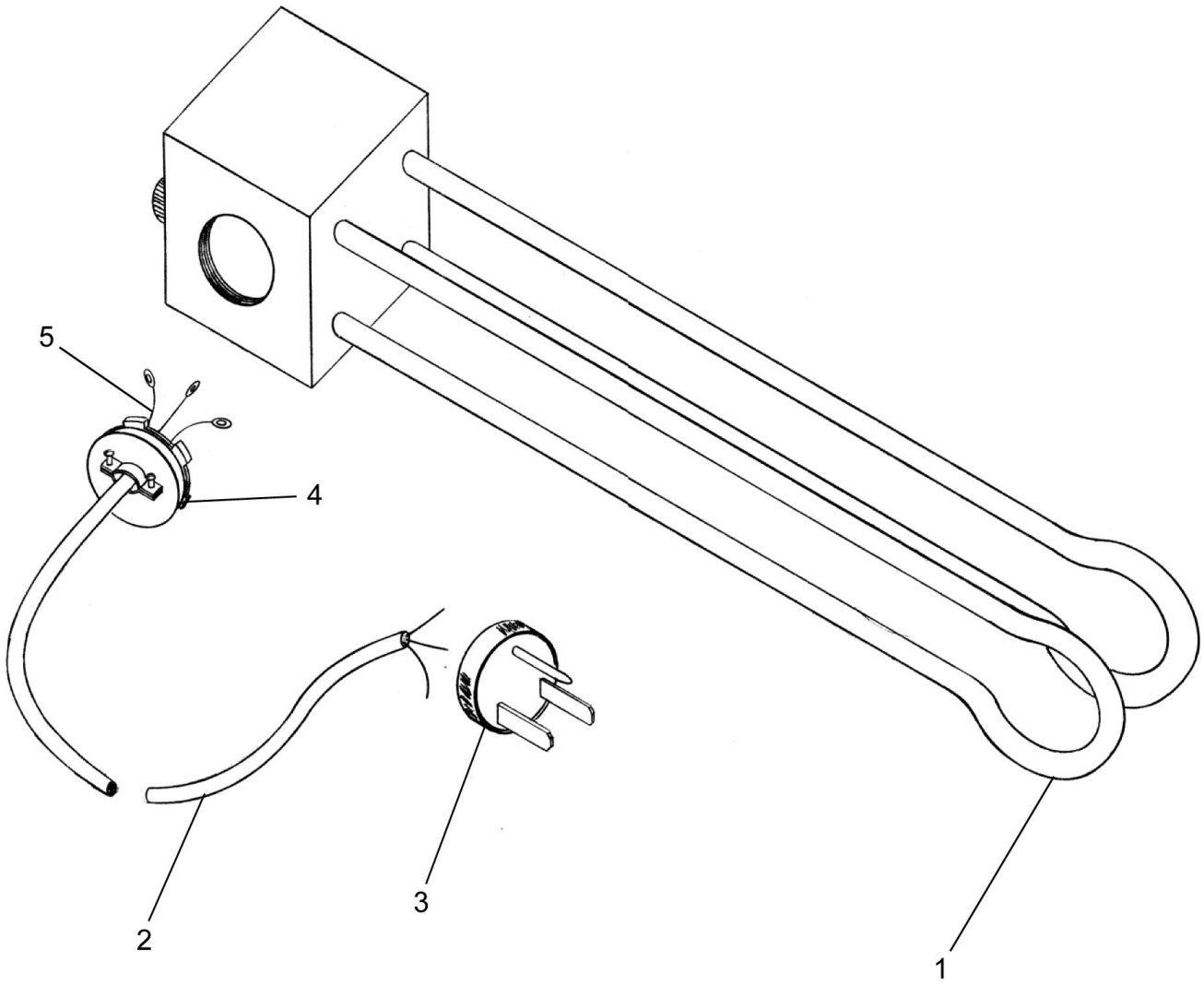

REF	PART NO.	DESCRIPTION	QTY
	1223-1028 (Rev. C)	*Immersion Heater*	
1	442-0316	Immersion Heater	1
2	12239-36	Cord, 12GA. 3 Wire	1
3	1223-478	Plug	1
4	1223-819	Connector	1
5	1223-54	Terminal	3

REF	PART NO.	DESCRIPTION	QTY
	T150057 (Rev. A)	*Remote Drive Assembly*	
1	**714A1416-3**	Air Assembly, Remote Drive (see page 514)	1
2	**T138733**	49 Pass Collector Ring (see page 515)	1
3	T150386	Harness, Remote Drive, Lower, 2017	1
4	**T151101**	Remote Steer, Upper ASSY, 2017 (see page 520)	1
5	**T156045**	Remote Steer, Lower ASSY, 2017 (see page 522)	1

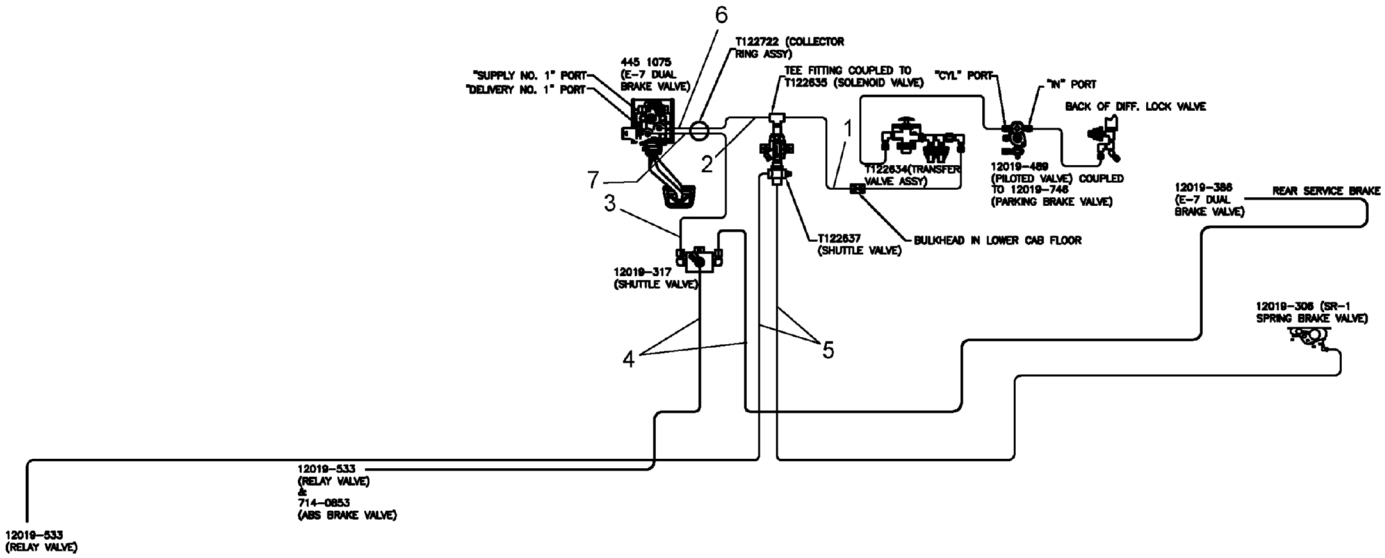

REF	PART NO.	DESCRIPTION	QTY
	714A1416-3 (Rev. L)	*Air Assembly, Remote Drive*	
1	12203-1	3/8" PFT-6B Black Tube	160
2	12203-1	3/8" PFT-6B Black Tube	156
3	12203-1	3/8" PFT-6B Black Tube	18
4	12204-1	Tubing, 1/2", Black	48
5	12203-1	3/8" PFT-6B Black Tube	48
6	12203-1	3/8" PFT-6B Black Tube	72
7	12203-1	3/8" PFT-6B Black Tube	72

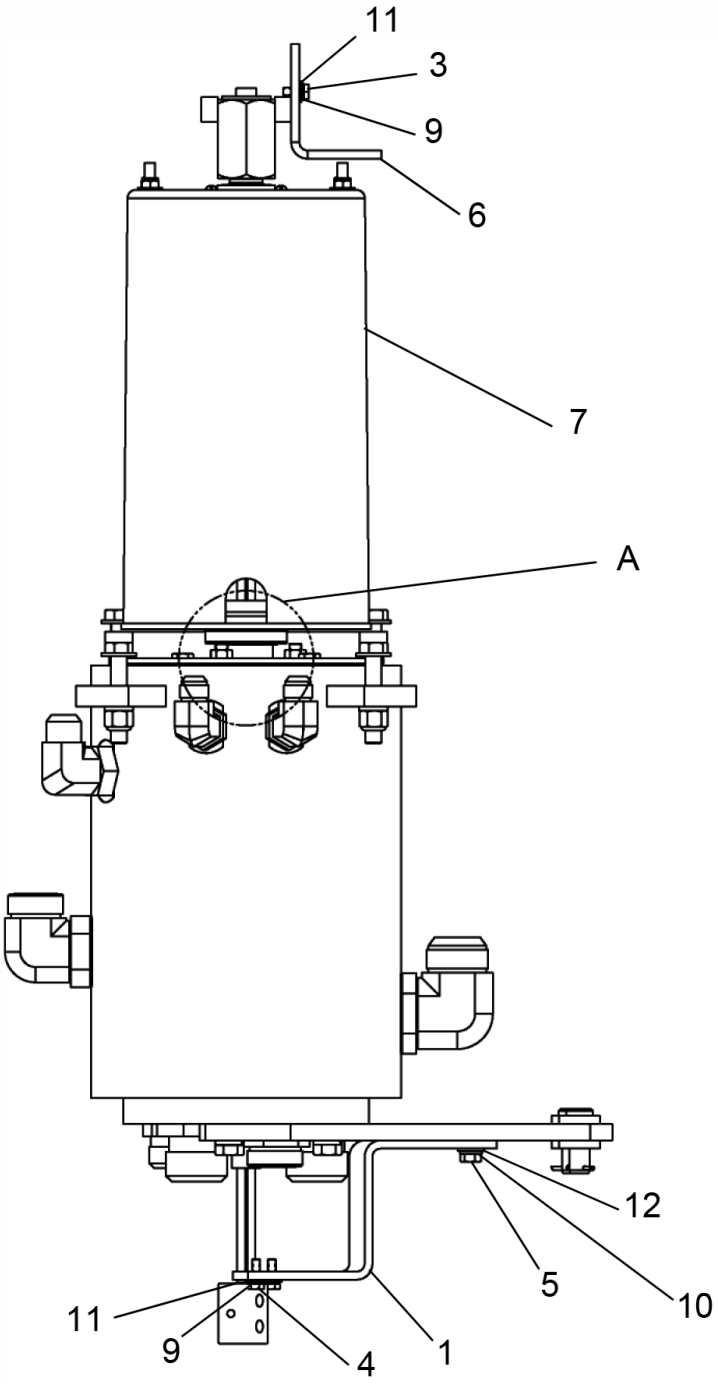

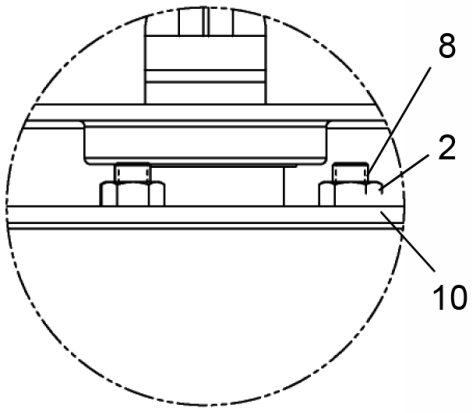

DETAIL A

WHEN ORDERING PARTS, SPECIFY MODEL NUMBER, SERIAL NUMBER AND DESCRIPTION OF PARTS REQUIRED

REF	PART NO.	DESCRIPTION	QTY
	T138733 (Rev. A)	*49 Pass Collector Ring*	
1	719-0413	Bracket-Bottom	1
2	N04-375C000-25	Nut, HEX 0.375- 16, ST Z GR5	3
3	SHF-250C625-25	SCR, HHCS FT 0.25-20 X 0.625, STZ G5	1
4	SHF-250C750-25	SCR, HHCS FT 0.25-20 X 0.75, ST Z G5	2
5	SHF-375C750-25	SCR, HHCS FT 0.375-16 X 0.75, STZ G5	1
6	T132665	Bracket, Air Swivel, Upper	1
7	**T138863**	Ring, 49 Circuit W/Air (see page 517)	1
8	TSD-375CA50-BX	Stud, DBLTHRD 0.375-16 X 1.50, ST BX	3
9	W07-250X000-20	WSH, LCK, MED SPLT 0.25, ST Z	3
10	W07-375X000-20	Washer Lock 3/8 MED	4
11	WAN-25NX000-20	WSH, FL TYPA-NRW 0.25, ST Z	3
12	WAN-37NX000-20	WSH, FL TYPA-NRW 0.375, ST Z	1

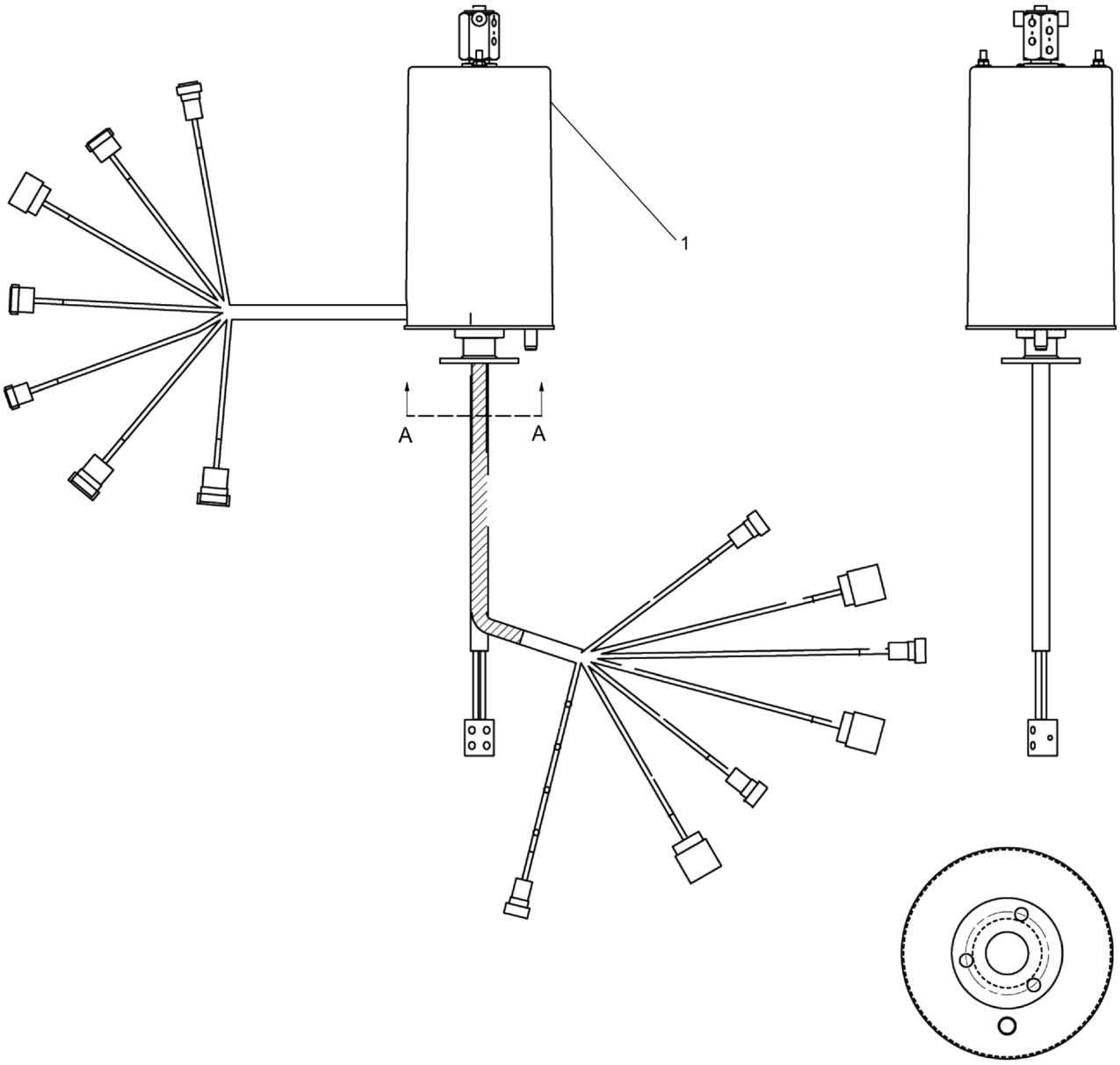

REF	PART NO.	DESCRIPTION	QTY
	T138863 (Rev. A)	*Ring, 49 Circuit W/Air*	
1	**224533**	4 - Passage Pneumatic Swivels (see page 518)	1

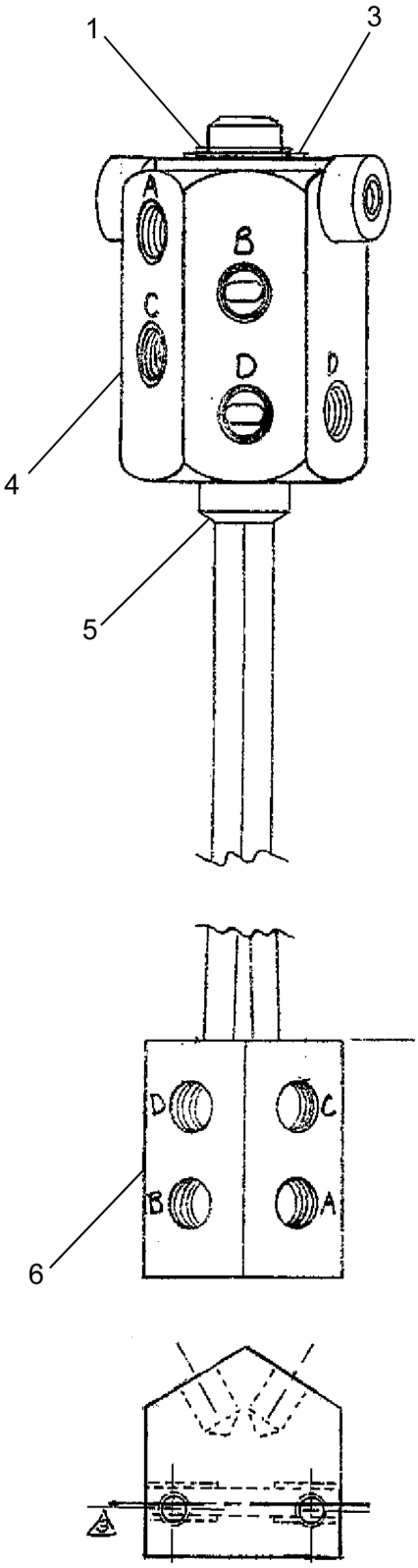
1
3
A
B
C
D
D
4
5
D
C
B
A
6

REF	PART NO.	DESCRIPTION	QTY
	224533 (Rev. 00)	*4 - Passage Pneumatic Swivels*	
	218885	Repair Kit, 4-Pass Air Swivel (Includes items 1 & 2)	1
1	224534	Retaining Ring	1
2*	224537	Quad Seals	5
3	224535	Washer (Below Retaining Ring)	1
4	224536	Jacket	1
5	224785	Spool	1
6	227791	Fixed End Block	1
7*	227801	Jacket Cap	1
8*	227802	Screw #8-32 X 0.50"	2

* ITEM NOT SHOWN IN ILLUSTRATION

WHEN ORDERING PARTS, SPECIFY MODEL NUMBER, SERIAL NUMBER AND DESCRIPTION OF PARTS REQUIRED

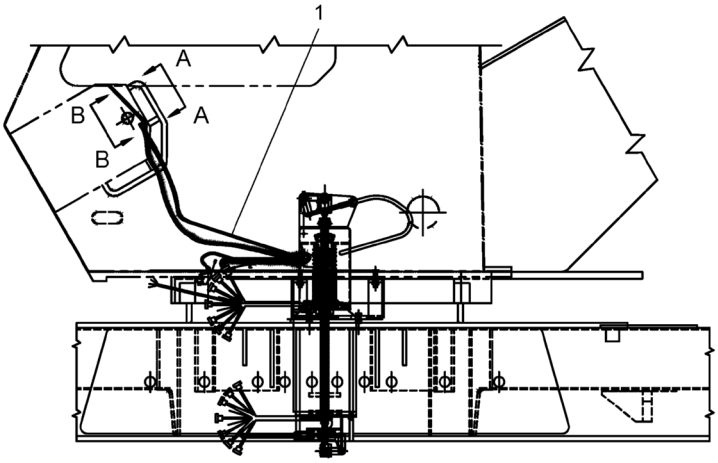

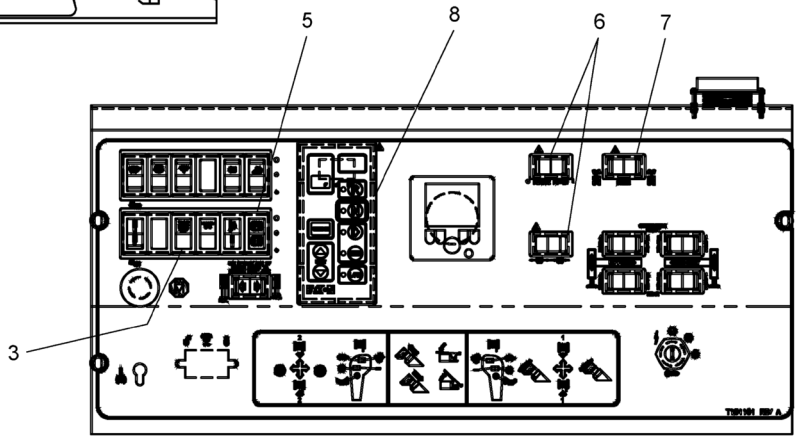

VIEW A - A

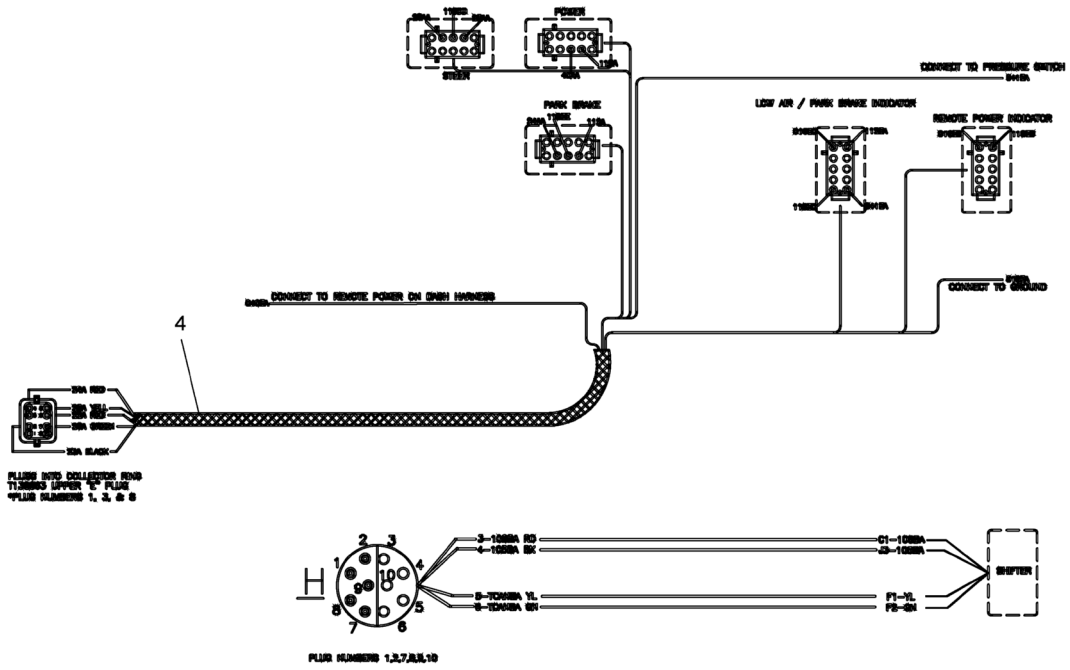

VIEW B - B

WHEN ORDERING PARTS, SPECIFY MODEL NUMBER, SERIAL NUMBER AND DESCRIPTION OF PARTS REQUIRED

REF	PART NO.	DESCRIPTION	QTY
	T151101 (Rev. A)	*Remote Steer, Upper ASSY, 2017*	
1	T138028	Harness, Remote Shift	1
2*	1223-662	Circuit Breaker 10AMP	1
3	T150668	INDIC, SVR, Remote Power	1
4	T150390	Harness, Remote Steer, GHG 2017	1
5	T150671	INDIC, SVR, Low Air, Park Brake	1
6	1223-1036	Rocker Switch	2
7	1223-1051	Rocker Switch	1
8	T126170	Shift Console	1

* ITEM NOT SHOWN IN ILLUSTRATION

WHEN ORDERING PARTS, SPECIFY MODEL NUMBER, SERIAL NUMBER AND DESCRIPTION OF PARTS REQUIRED

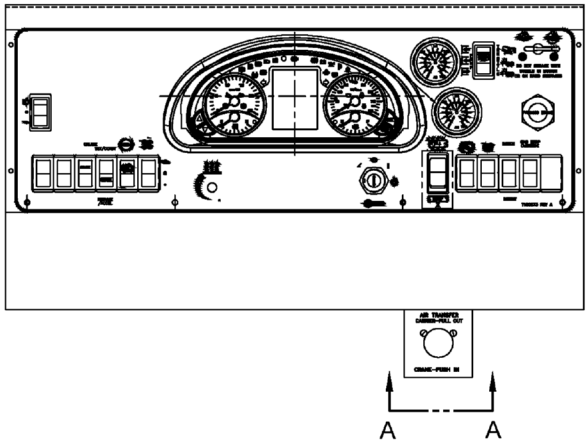

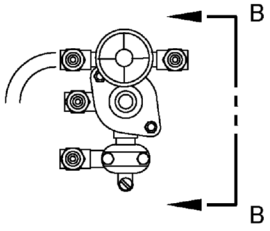

DETAIL OF PARKING BRAKE
AIR HOSE CONNECTORS
& PRESS SWITCH

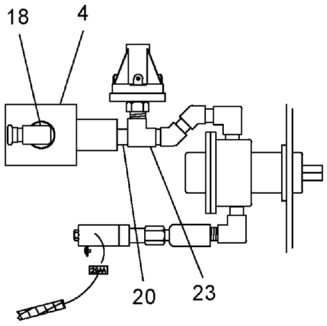

VIEW B - B

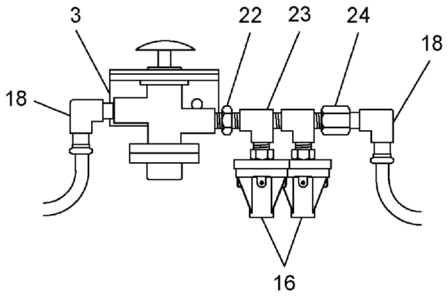

VIEW A - A

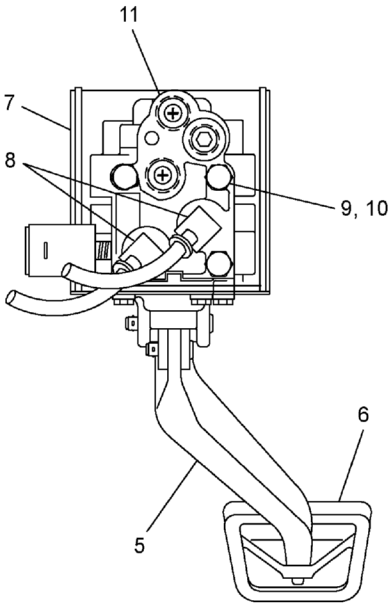

UPPER BRAKE ASSEMBLY

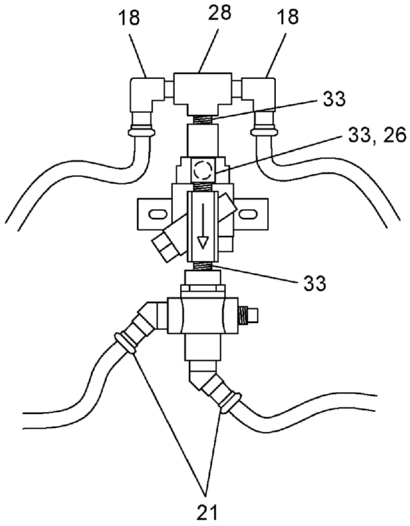

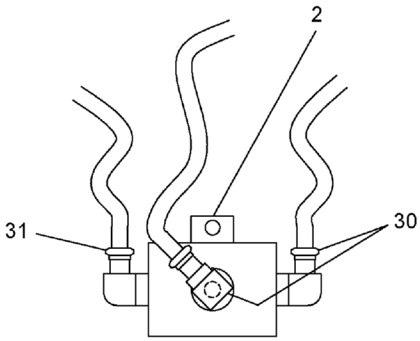

SHUTTLE VALVE ASSEMBLY

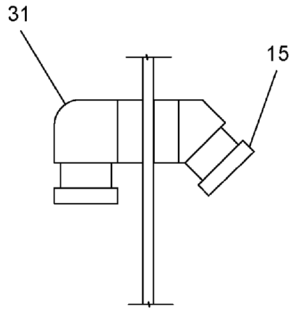

DETAIL OF UPPER CAB WALL

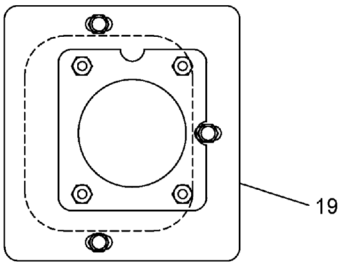

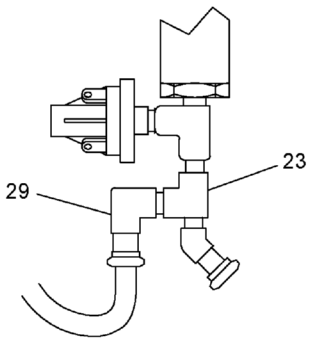

BACK OF DIFF LOCK

REF	PART NO.	DESCRIPTION	QTY
	T156045 (Rev. A)	*Remote Steer, Lower ASSY, 2017*	
1*	**T156046**	Kit, Remote Steering, 2017 (see page 524)	1
2	12019-317	Air Valve, WM-80	1
3	708-0026	Bracket	1
4	12019-489	Valve Pilot 250A-3-11-20	1
5	708F2432	Pedal	1
6	1221-19	Pad, Pedal	1
7	709F6761	Bracket, Brake	1
8	T149768	Elbow 45°, PTC-6-8	4
9	SHF-375CA00-25	HHCS 3/8 NC X 1 GR5 Zinc	4
10	W07-375X000-20	Washer Lock 3/8 MED	4
11	445-1075	Valve Air Brake (ALLIED 1083)	1
12*	**T118604**	Steering shaft Assembly (see page 528)	1
13*	1206-63	Set Screw	1
14*	1214-48	Bushing RBC B-14-L	1
15	T150074	Elbow 45°, PTC-6-6	2
16	1223-1070	Pressure Switch	2
17*	12019-388	Bulkhead Union #62NBH	1
18	T145514	Elbow, 90°, PTC-6-4	6
19	T123967	Cover	1
20	1219-99	Nipple Close 215PN-2	1
21	T145520	Elbow, 45°, PTC-6-4	2
22	1219-43	Reducer	1
23	1219-55	T Fitting	4
24	1219-52	Adapter	1
25*	12203-1	3/8" PFT-6B Black Tube	72"
26	1219-848	Adapter, 1/4" NPT	1
27*	T127251	Seal, Steering Shaft	1
28	1219-849	Tee, Female, 1/4" NPT	1
29	T149767	Elbow, 90°, PTC-6-2	1
30	T145516	Elbow, 90°, PTC-8-6	2
31	T118088	Elbow, 90°, PTC-6-6	3
32*	1219-551	Plug, -4, NPTF	1
33	1219-512	Nipple, 1/4 NPT	3

* ITEM NOT SHOWN IN ILLUSTRATION

WHEN ORDERING PARTS, SPECIFY MODEL NUMBER, SERIAL NUMBER AND DESCRIPTION OF PARTS REQUIRED

REF	PART NO.	DESCRIPTION	QTY
	T156046 (Rev. A)	*Kit, Remote Steering, 2017*	
1	**T118603**	Remote Steering, Actuator ASSY (see page 525)	1
2	T122634	Valve Transfer ASSY	1
3	T122635	Valve, Solenoid	1
4	T122636	Floreg Control	1
5	T122637	Valve, Air Shuttle	1
6	T122638	Pressure Switch	1
7	T154161	Harness, Remote Steer, Lower, 2017	1
8	**T156047**	Assembly, Remote Steer Motor, 2017 (see page 527)	1

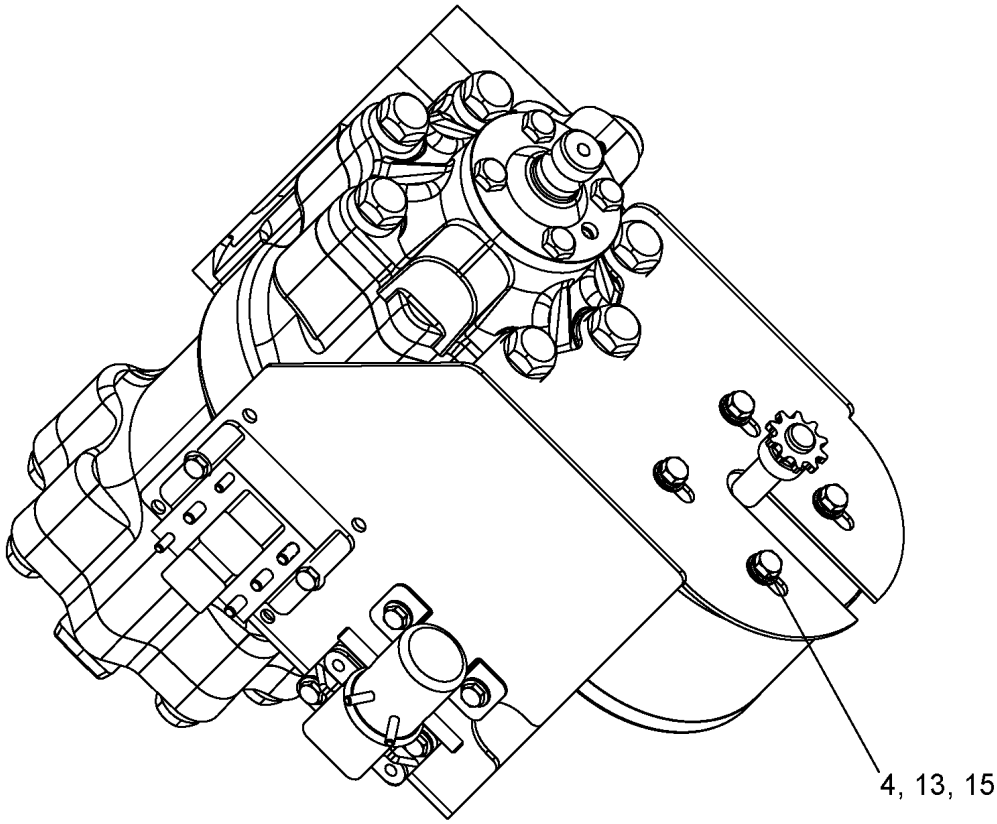
4, 13, 15

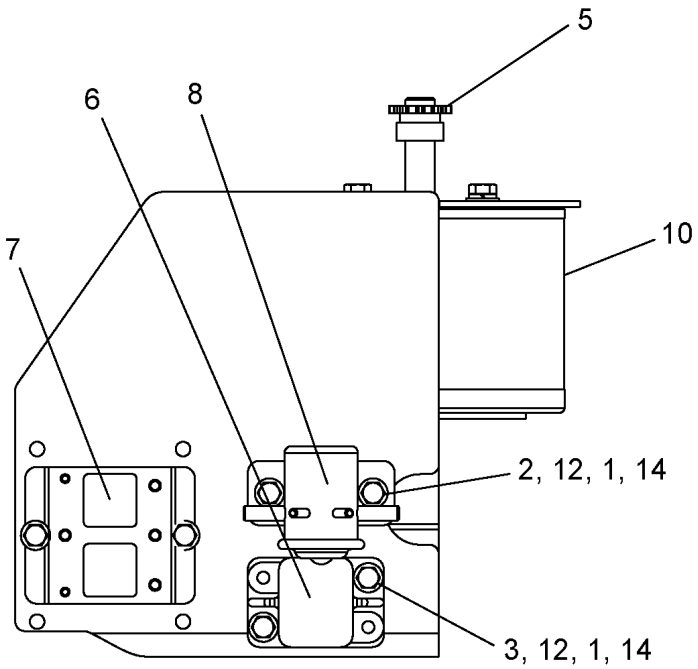
5
6
8
7
10
2, 12, 1, 14
3, 12, 1, 14

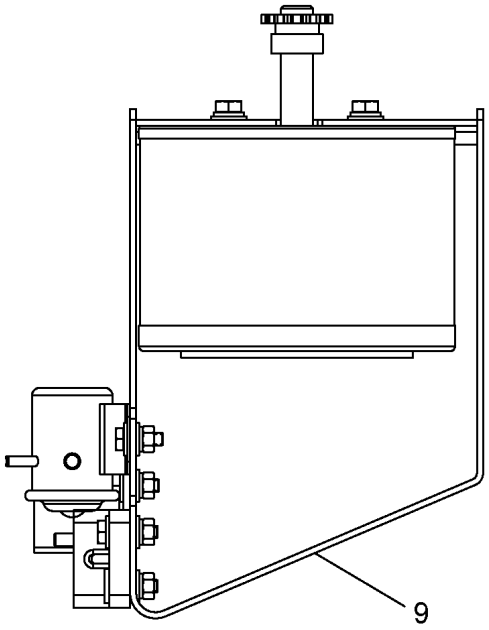
9

REF	PART NO.	DESCRIPTION	QTY
	T118603 (Rev. C)	*Remote Steering, Actuator ASSY*	
1	N04-250C000-25	Nut, HEX 0.25-20, ST SQC G5	6
2	SHF-250C750-25	SCR, HHCS FT 0.25-20 X 0.75, ST Z G5	4
3	SHF-250CA00-25	SCR, HHCS FT 0.25-20 X 1.00, ST SQC G5	2
4	SHF-312C750-25	SCR, HHCS FT 0.312-18 X 0.75, ST SQC G5	4
5	T118592	Sprocket, 35BS10	1
6	T118594	Circuit Breaker	1
7	T118595	Relay Module, Reversing	1
8	T118596	Relay, Solenoid	1
9	T118597	Bracket Assembly	1
10	T118598	Motor, Electric	1
11*	T118789	Roller Chain	1
12	W07-250X000-20	WSH, LCK, MED SPLT 0.25, ST Z	6
13	W07-312X000-20	WSH, LCK, MED SPLT 0.3125, ST SQC	4
14	WAN-25NX000-20	WSH, FL TYPA-NRW 0.25, ST Z	12
15	WAN-31NX000-20	WSH, FL TYPA-NRW 0.3125, ST SQC	4

* ITEM NOT SHOWN IN ILLUSTRATION

WHEN ORDERING PARTS, SPECIFY MODEL NUMBER, SERIAL NUMBER AND DESCRIPTION OF PARTS REQUIRED

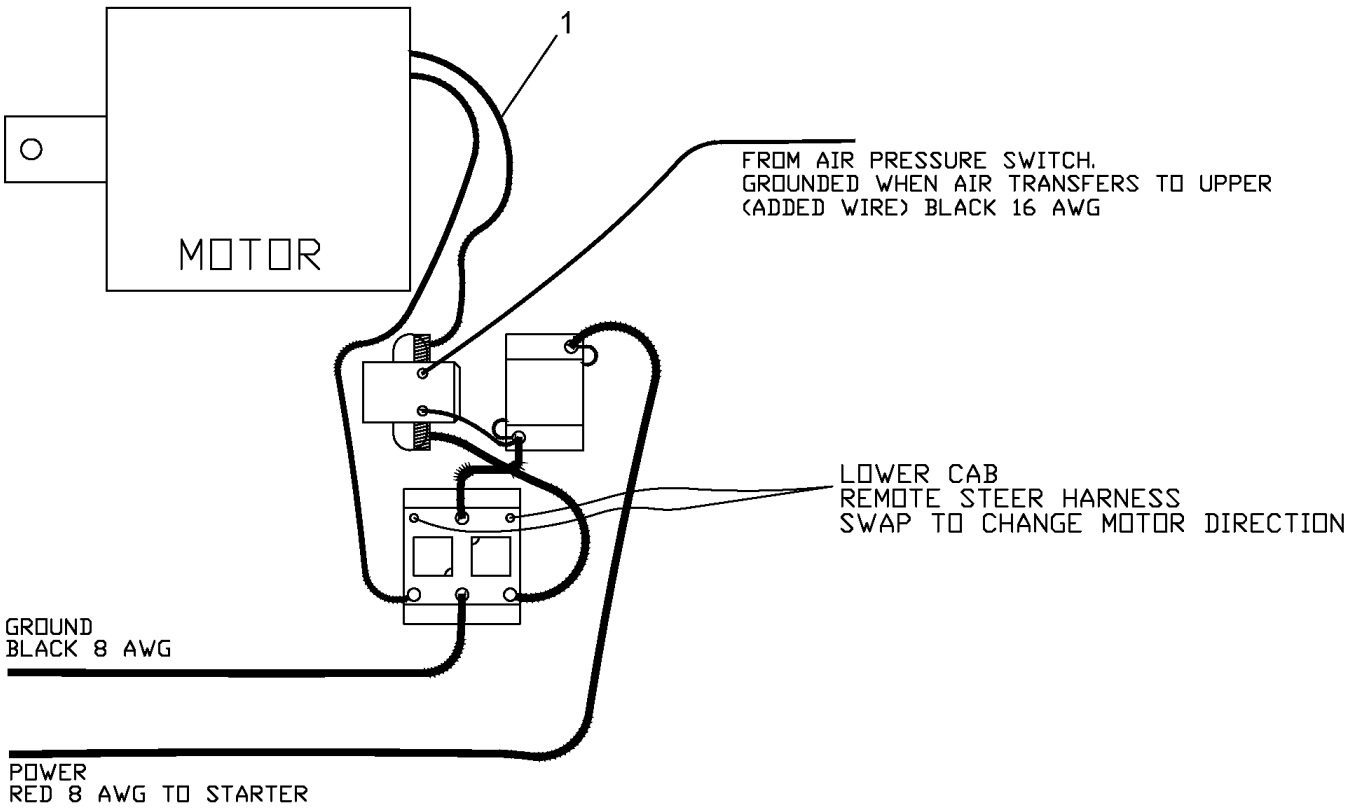

REF	PART NO.	DESCRIPTION	QTY
	T156047 (Rev. A)	*Assembly, Remote Steer Motor, 2017*	
1	T155747	Harness, Remote Steer Power, MTU, 2017	1

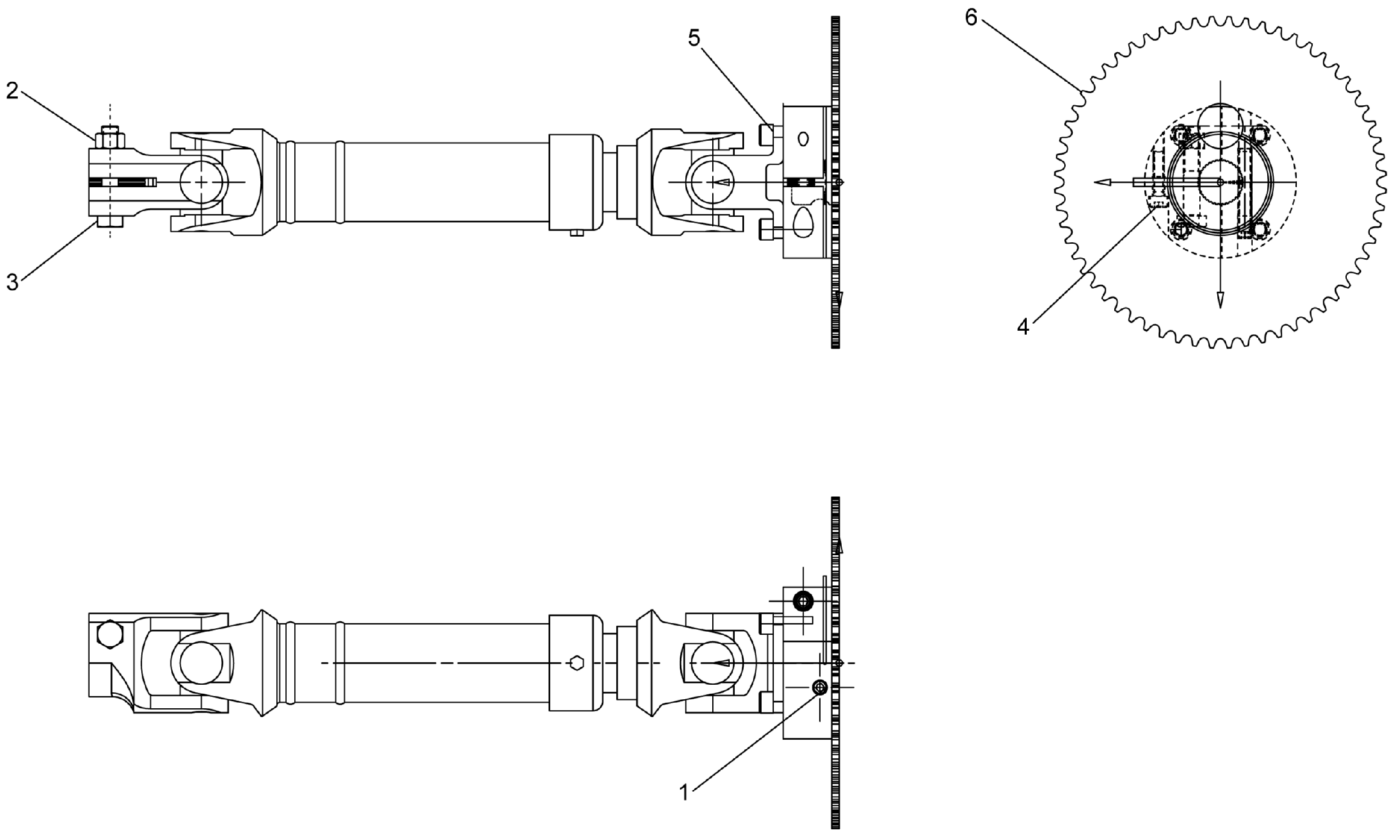

REF	PART NO.	DESCRIPTION	QTY
	T118604 (Rev. C)	*Steering shaft Assembly*	
1	ASME_B18_3_M_A, 0.3125-18X2	HEX Socket Head Set Screw, Flat Point, AI, 0.3125-18 X 2	1
2	N04-375C000-25	Nut, HEX 0.375- 16, ST Z GR5	1
3	S01-375CB00-25	SCR, HHCS 0.375-16 X 2.00, ST Z GR5	1
4	S14-250CA00-H2	SCR, SHCS 0.25-20 X 1.00, ST Z	1
5	S14-312F875-H2	SCR, SHCS 0.3125-24 X 0.875, ST Z	4
6	T118593	Sprocket Assembly	1

REF	PART NO.	DESCRIPTION	QTY
	722A0103 (Rev. 00)	*Boom Dolly Assembly*	
1	**718-0905**	Boom Dolly (see page 530)	1
2	**718A0716**	Boom Dolly Hydraulic Assembly (see page 534)	1
3	**718A0729**	Light Bar Assembly (see page 536)	1
4	722F0102	Boom Modifications Boom Dolly	1

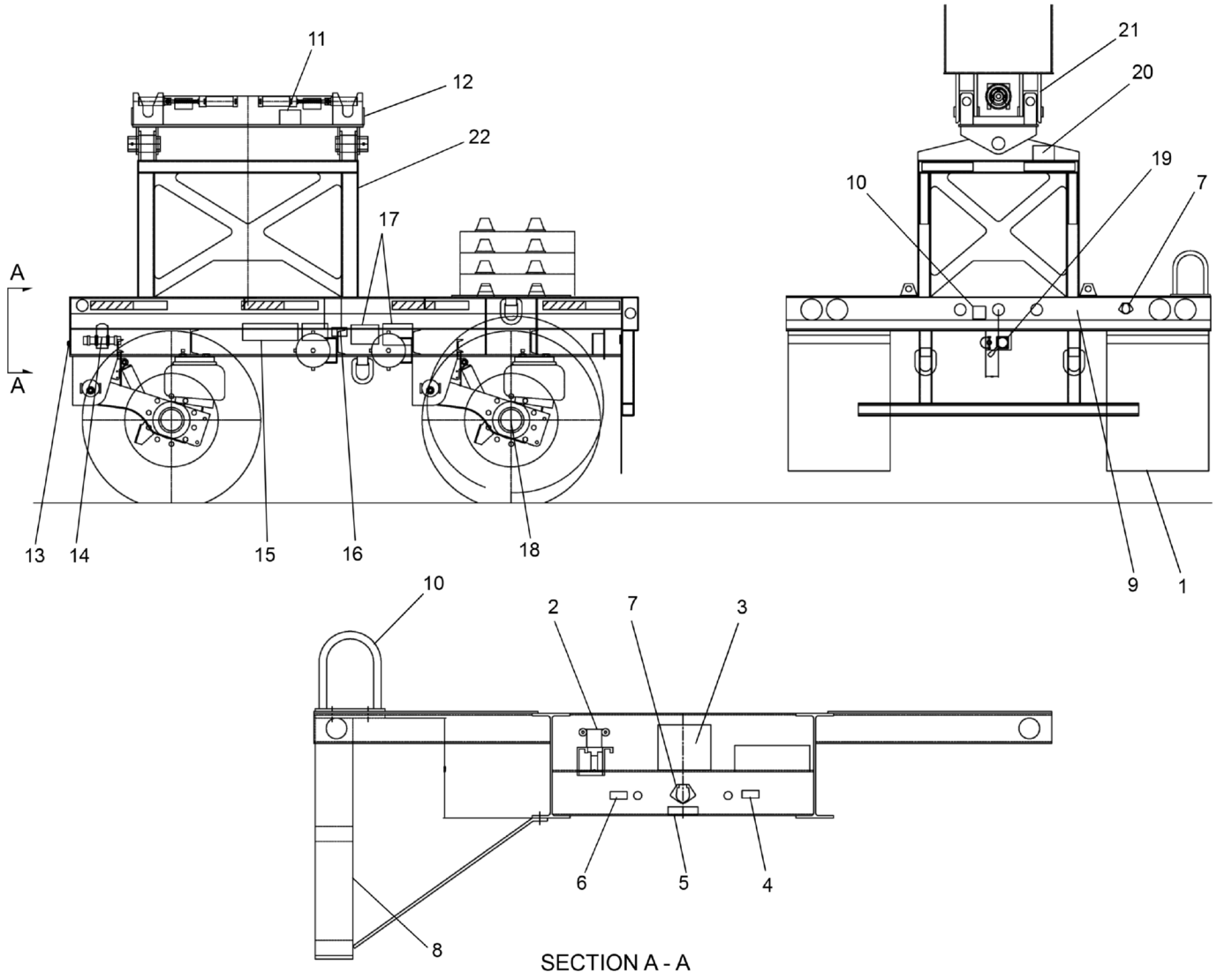

WHEN ORDERING PARTS, SPECIFY MODEL NUMBER, SERIAL NUMBER AND DESCRIPTION OF PARTS REQUIRED

REF	PART NO.	DESCRIPTION	QTY
	718-0905 (Rev. 00)	*Boom Dolly*	
1	219255	Mud Flap, 24" x 32"	2
2	219256	Function Holder	1
3	219257	Decal, Connection Procedure	1
4	219258	Control Decal	1
5	219259	12 Volt System Decal	1
6	219260	Supply Decal	1
7	219261	7-Way Receptacle	2
8	219262	Ladder, Step	1
9	219263	Decal, Nelson	1
10	219264	Air Locking Pin Decal	1
11	219265	Warning, Hands & Fingers	2
12	219266	Rocker Assembly	1
13	219267	Bulkhead Fitting	1
14	219268	Registration Holder	1
15	219269	Webb Wheel Decal	1
16	219270	Brake Lining Decal	1
17	219271	Suspension Decal, (Torque SPEC)	1
17.1	219272	Suspension Decal, (Safety & INSP.)	1
18	219273	11R22.5 Dunlop Tires	8
18.1	219274	Wheels (ALUM. Mach Finish - Inside)	4
18.2	219275	Wheels (ALUM. Polish Finish - Outside)	4
18.3	**219276**	Hendrickson Suspension - 71 1/2" (see page 532)	2
19	219277	Air Control Valve Plate	1
20	219278	Pinch Point Decal	2
21	219279	Boom Ear Assembly - Long	2
21.1	219280	Boom Ear Assembly - Short	2
22	219281	Tower Assembly	1

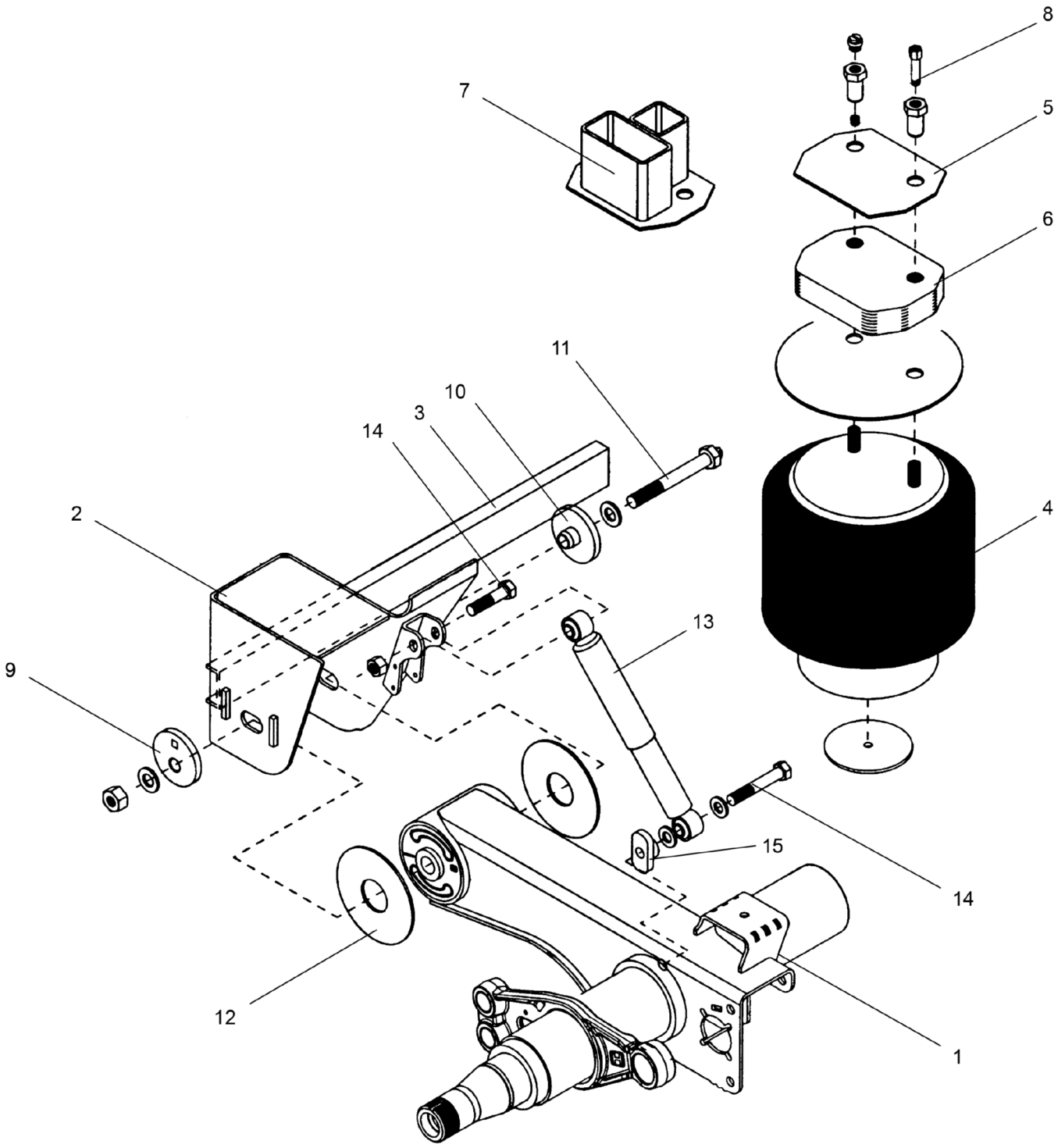

WHEN ORDERING PARTS, SPECIFY MODEL NUMBER, SERIAL NUMBER AND DESCRIPTION OF PARTS REQUIRED

REF	PART NO.	DESCRIPTION	QTY
	219276 (Rev. 00)	*Hendrickson Suspension - 71 1/2"*	
1	NSS*_Axle / Beam Weld	Axle / Beam Weldment	REF
2	219281	Tower Assembly	1
2.1	219285	Frame Bracket (Curbside)	1
3	219286	Frame Bracket Channel	1
4	219287	Air Spring	2
5	219288	Air Spring Mounting Plate	2
6	219289	Spacer, Plastic 1 1/8"	2
7	219290	Spacer Assembly, Air Spring	2
8	219291	Mounting Kit, Air Spring	2
9	219292	Collar, Alignment - Eccentric	2
10	219293	Collar, Alignment - Concentric	2
11	219294	Pivot Bolt Kit	2
11.1	219295	Pivot Bushing Kit	2
12	219296	Spacers, Bushing Tube	4
12.1	219297	Spacer Kit, Bushing	2
13	219298	Absorber, Shock	2
13.1	219302	Strap Kit, Shock	2
14	219299	Bolt Kit, Shock Absorber	2
15	219300	Shock Spacer Assembly	2

* NOT SOLD SEPARATELY

WHEN ORDERING PARTS, SPECIFY MODEL NUMBER, SERIAL NUMBER AND DESCRIPTION OF PARTS REQUIRED

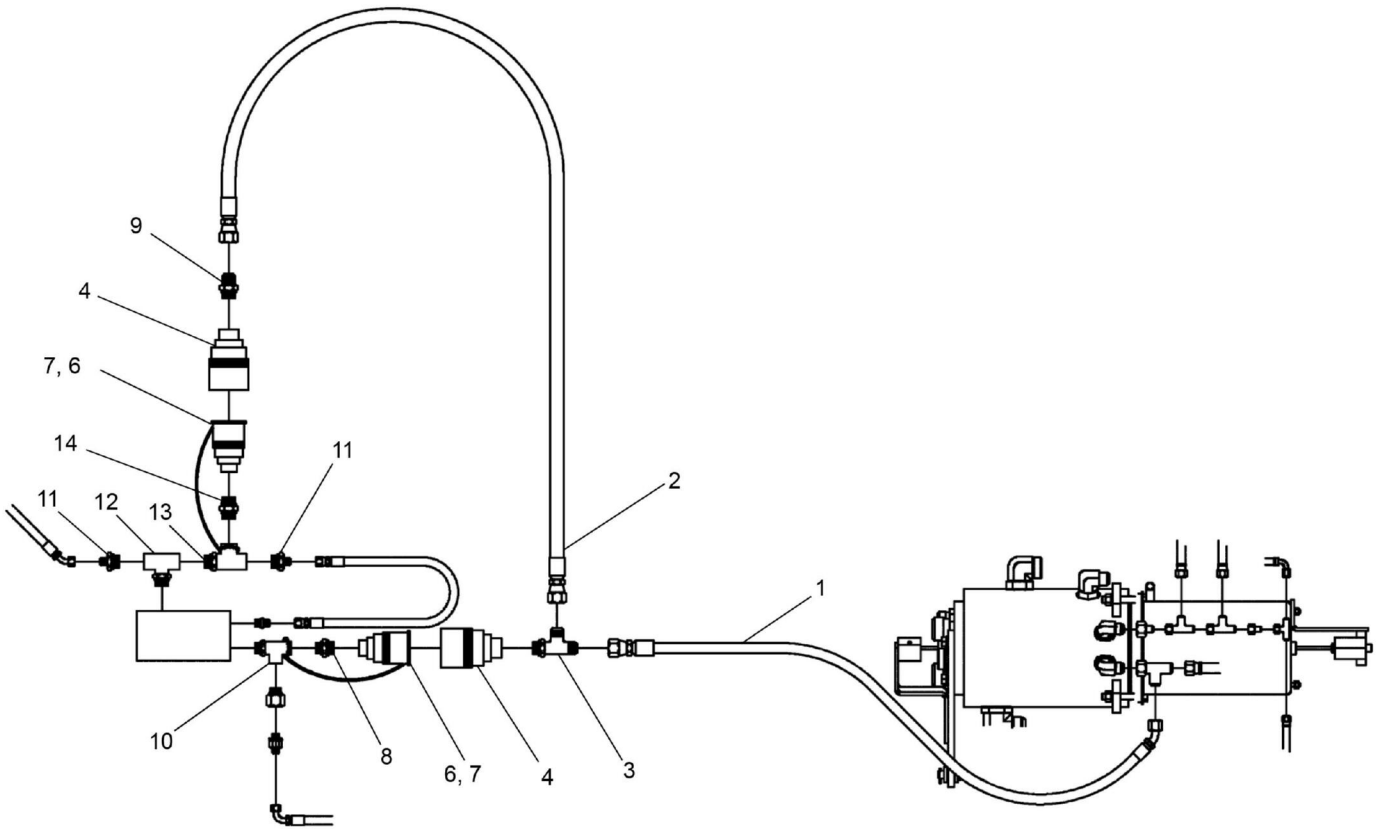
9
4
7, 6
14
11
11
12
13
2
1
10
8
6, 7
4
3

REF	PART NO.	DESCRIPTION	QTY
	718A0716 (Rev. C)	*Boom Dolly Hydraulic Assembly*	
1	718 0717-60	Hose	1
2	709 5012-38	Hose	1
3	1219-714	Tee, Run	1
4	717 0837	Disconnect, Coupler	2
5*	12400-925	Decal, Boom Float	1
6	717 0838	Disconnect, Nipple	2
7	717 1250	Dust Plug & Cap	2
8	12019-713	Adapter	1
9	1219-389	Adapter	1
10	12019-714	Tee, Run	1
11	12019-704	Adapter	2
12	12019-716	Tee, Branch	1
13	12019-715	Tee, Run	1
14	12019-292	Adapter	1

* ITEM NOT SHOWN IN ILLUSTRATION

WHEN ORDERING PARTS, SPECIFY MODEL NUMBER, SERIAL NUMBER AND DESCRIPTION OF PARTS REQUIRED

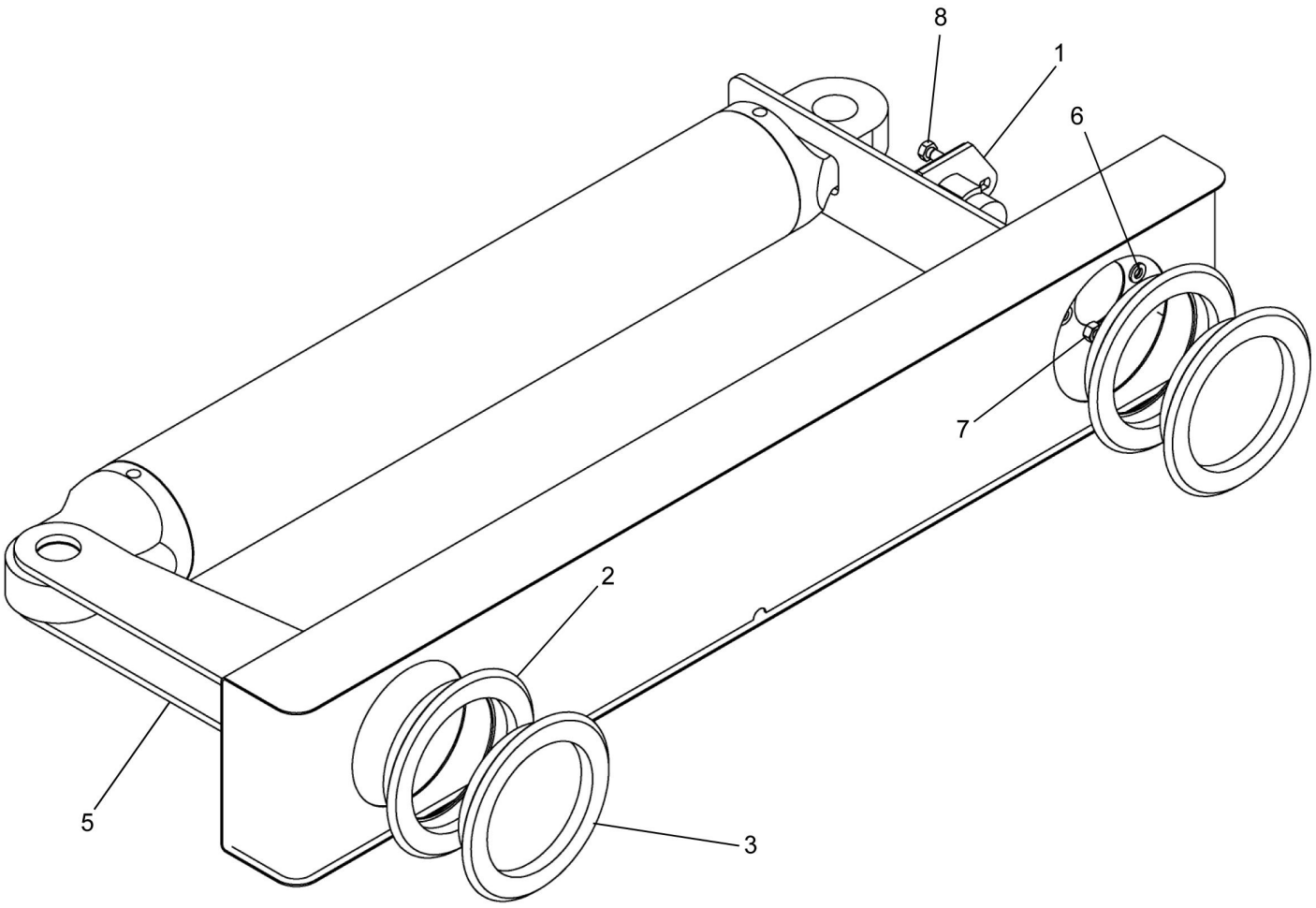

WHEN ORDERING PARTS, SPECIFY MODEL NUMBER, SERIAL NUMBER AND DESCRIPTION OF PARTS REQUIRED

LOAD KING BY CUSTOM TRUCK ONE SOURCE

LIGHT BAR ASSEMBLY

DATE: Revised 06-2018

MODEL: 480-126

PAGE: 536

CHAPTER 3

REF	PART NO.	DESCRIPTION	QTY
	718A0729 (Rev. B)	*Light Bar Assembly*	
1	1223-926	7 Pin Connector	1
2	1223-866	Grommet	2
3	1223-864	Tail Light (Red)	2
4*	1223-969	19' Coiled Cord	1
5	718F0730	Light Bar WELD	1
6	W07-312X000-20	WSH, LCK, MED SPLT 0.3125, ST SQC	2
7	N04-312C000-2A	Nut, HEX 0.3125-18, ST SQC GA	2
8	SHF-312C750-25	SCR, HHCS FT 0.312-18 X 0.75, ST SQC G5	2

* ITEM NOT SHOWN IN ILLUSTRATION

WHEN ORDERING PARTS, SPECIFY MODEL NUMBER, SERIAL NUMBER AND DESCRIPTION OF PARTS REQUIRED

REF	PART NO.	DESCRIPTION	QTY
	718A0699 (Rev. 00)	*Remote Outrigger ASSY*	
1	1223-945	Switch	12
2	12400-850	Decal, Front Jack	1
3	12400-936	Decal, Remote Outriggers	2
4	718 0456	Harness-Remote Outrigger	2
5	718 0458	Harness-Remote Outrigger Front	1

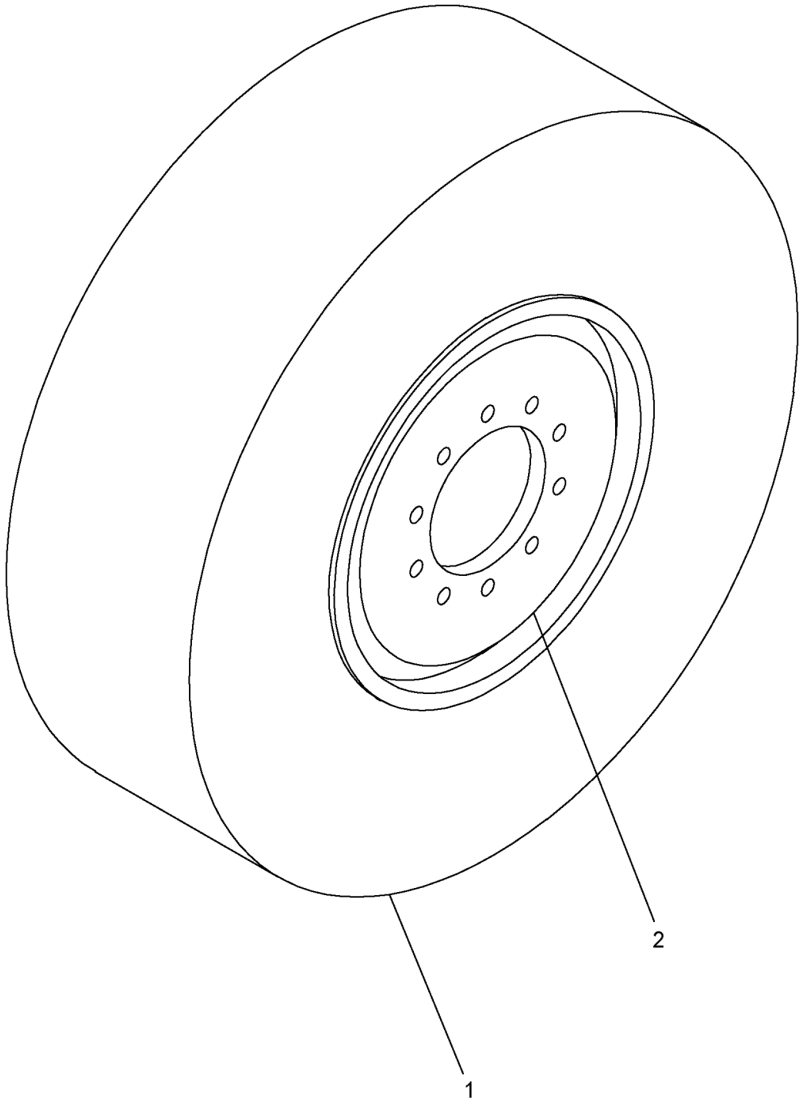

REF	PART NO.	DESCRIPTION	QTY
	718A0627 (Rev. 00)	*Wheel & Tire Assembly, 445/65R22.5*	
1	718 0628	Wheel, Front	1
2	718 0629	Tire, Front, 445/65R22.5	1

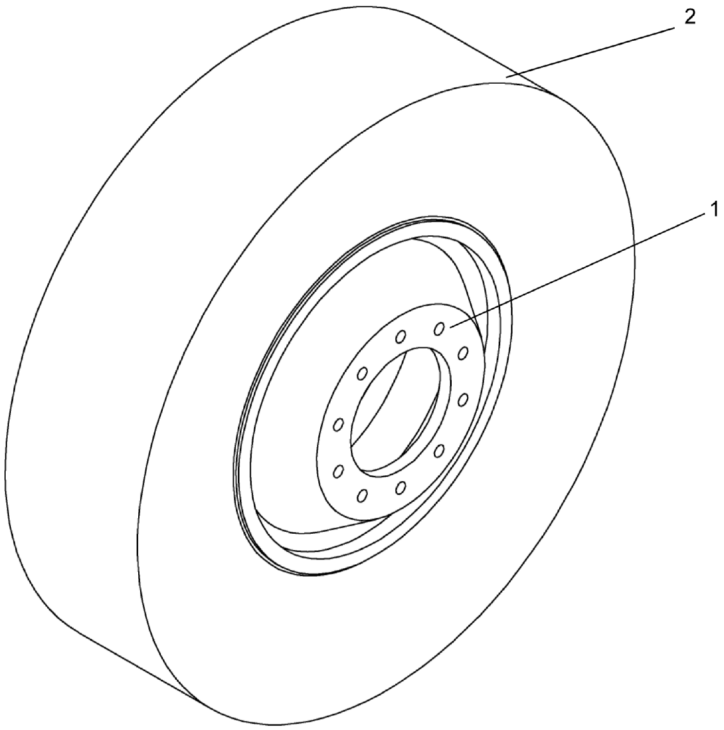

REF	PART NO.	DESCRIPTION	QTY
	718A0611 (Rev. 00)	*Wheel & Tire Assembly, 315/80R22.5*	
1	718 0606	Tire	1
2	718 0610	Wheel	1

CHAPTER NO. 4

PAINT & MARKING



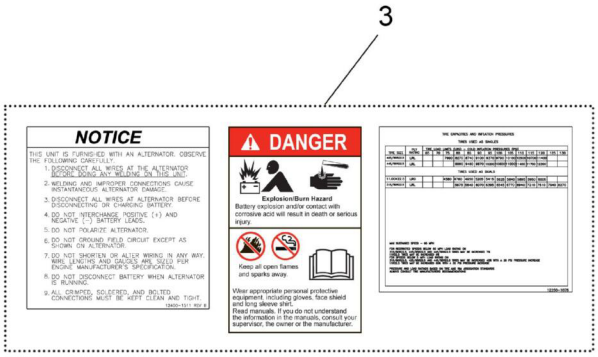

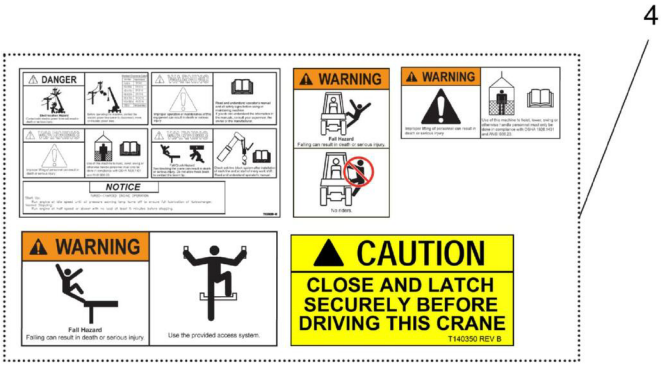

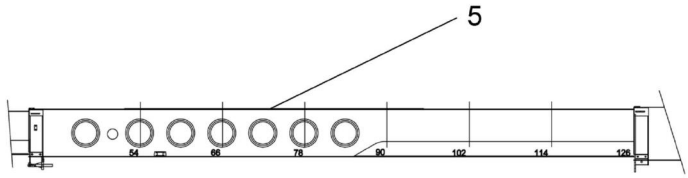

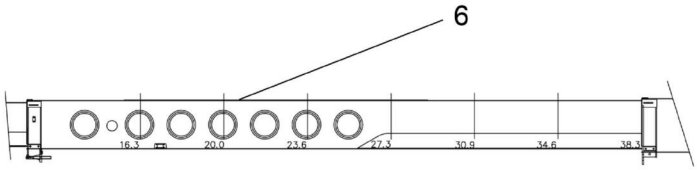

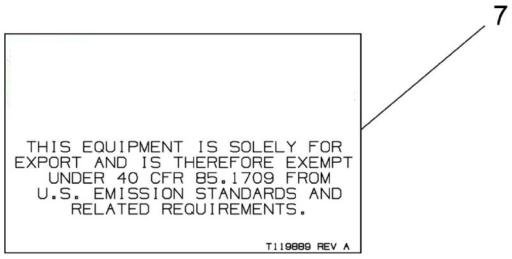

NOTE: Above decals are indicative only. For actual decals used on a crane model, refer to their respective part nos. in its parts table & drawings therefore.

REF	PART NO.	DESCRIPTION	QTY
	480-126-2017-DECALS* (Rev. 00)*PAINT & MARKING*		
1	**722A0028-1**	Paint & Marking (see page 545)	1
1A	**722A0028-2**	Paint & Marking (see page 548)	1
2	**T152649**	ISO Decals Assembly (see page 551)	1
3	**T150876-Decals***	Lower Cab Decals (W/ Supplier Cab) (see page 553)	1
4	**T120173-Decals***	Upper Cab Decals (W/ Supplier Cab) (see page 554)	1
5	**721A0156**	Boom Marking 126' English (see page 555)	1
6	**721A0157**	Boom Marking 126' Metric (see page 556)	1
7	**T119918**	Tier 3 Emissions Decal Installation (see page 557)	1

* NOT PURCHASABLE AT THIS LEVEL

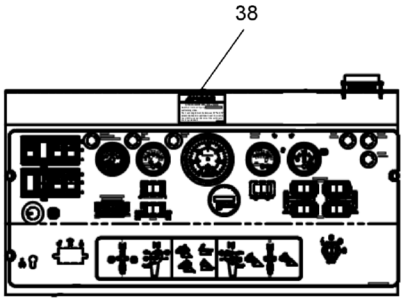

DASH PANEL LOCATED IN UPPER CAB

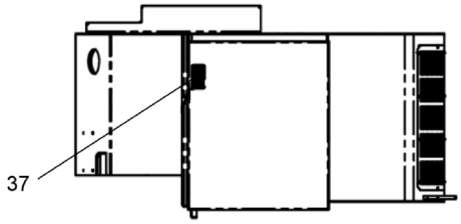

TOP VIEW OF ENGINE HOUSING

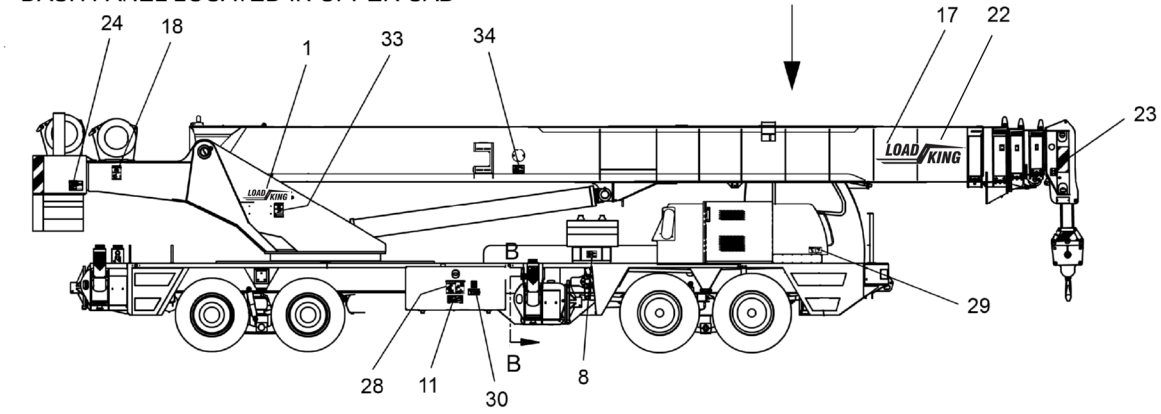



VIEW OF
UPPER CAB THRESHOLD

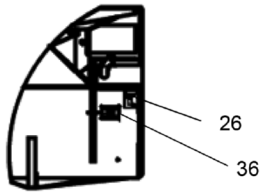

SECTION B-B

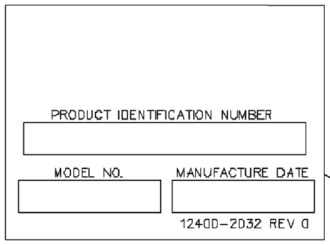

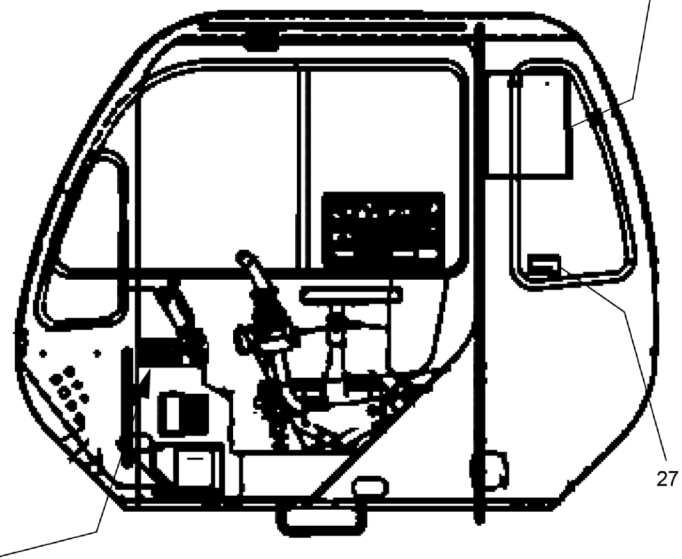

INTERIOR DETAIL
OF UPPER CAB

WHEN ORDERING PARTS, SPECIFY MODEL NUMBER, SERIAL NUMBER AND DESCRIPTION OF PARTS REQUIRED

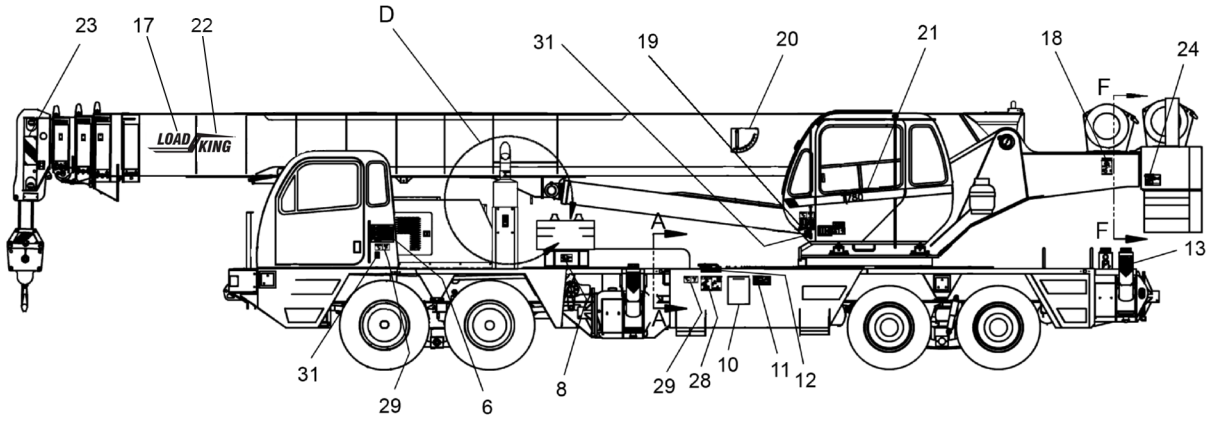

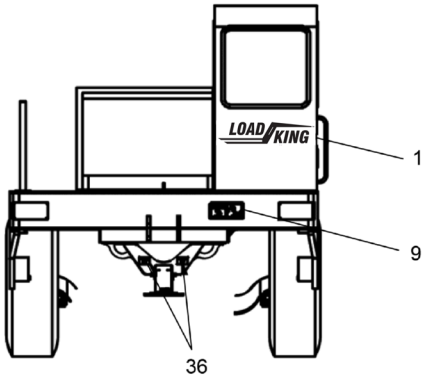

FRONT VIEW OF MACHINE

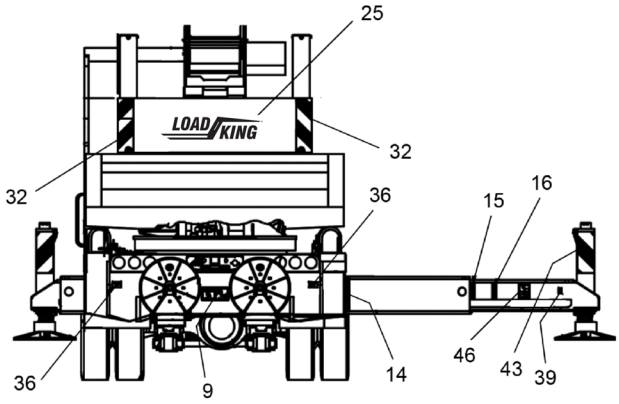

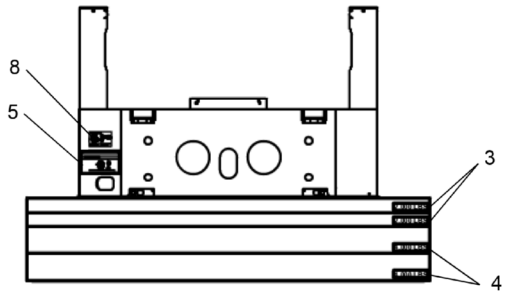

SECTION F-F

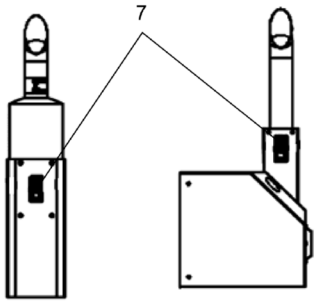

DETAIL D



LOCATE ON SHROUD BY ENGINE FAN

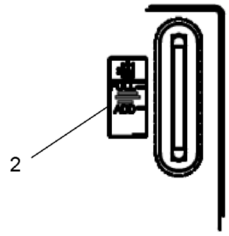

SECTION A-A

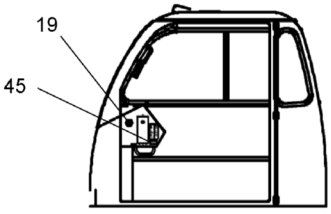

INTERIOR DETAIL OF LOWER CAB

REF	PART NO.	DESCRIPTION	QTY
	722A0028-1 (Rev. AE)	*Paint & Marking*	
1	1007066	5 INCH LOADKING DECAL	2
2	12400-976	Decal, HYD Oil Level	1
3	12400-985	Decal, 2000 LBS.	2
4	12400-986	Decal, 4000 LBS.	2
5	12400-854	Decal, HYD CTWT Removal	1
6	12400-943	Lube Chart	1
7	T127330	Decal, Burn Hazard	1
8	1006842	Decal, Danger Crush	3
9	1006855	Decal, Electrocution	2
10	12260-524	Decal, Hand Signal	2
11	1006841	Decal, Entanglement	2
12	12260-75	Decal, HYD Oil	1
13	12400-1514	Decal, O.R. Crush Hazard	4
14	714 0494-1	Striping, Yellow 2 X 10	8
15	714 1522-5	Yellow Strip 2 X 5	8
16	714 1521-3	Red Strip 2 X 5	8
17	1007067	10 INCH LOADKING DECAL.	2
18	651-00424	Decal, Crush Hazard Winch	2
19	1007065	Decal, Product Registration	1
20	1006843	Decal, Boom Angle	1
21	T108183	Decal, Cab T775	1
22	VBB-125X400-L5	RVT, BTNHD, Blnd 0.125 X 0.400, AL	4
23	T105658	Decal, Boom Stripe	2
24	12400-1505	Decal, Danger Tail Swing	2
25	1007066	5 INCH LOADKING DECAL	2
26	12400-1510	Decal, Air Tank	1
27	12260-843	Decal, Do Not Remove	1
28	12400-1512	Decal, Electrocution	2
29	12400-1516	Decal, Fall Hazard	3
30	12400-1508	Decal, Diesel Fuel, Explosion	1
31	12400-1003	Decal, Fire Extinguisher	2
32	1006859	Decal, CWT Stripe	2
33	12400-1503	Decal, Skin Injection	1
34	12400-1515	Decal, Jib Retaining Pin	1
35	12400-1506	Decal, Fan Warning	1
36	T135919	Decal, Tie Down Indicator	6
37	12400-1504	Decal, Hot Fluids	1
38	12400-984	Decal, Back Stability	1
39	T135917	Decal, Lift Point Indicator	4
40*	Q70H-977261 N/A	Paint, LOAD KING WHITE	5 GAL
41*	Q70H-977271 RAL	Paint, LOAD KING GRAY	5 GAL
42	12400-2032	Decal, Serial No	1
43	1006860	Decal, O.R. Stripe	4
44	714 0622	Anti Slip Tape, Upper Door Jam	2
45	CTOS-CIC	Decal, Product Support	1
46	1006834	Decal, Fall Hazard, O.R.	8

* ITEM NOT SHOWN IN ILLUSTRATION

WHEN ORDERING PARTS, SPECIFY MODEL NUMBER, SERIAL NUMBER AND DESCRIPTION OF PARTS REQUIRED

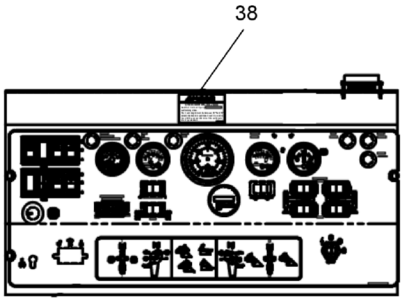

DASH PANEL LOCATED IN UPPER CAB

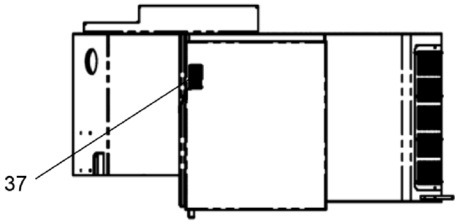

TOP VIEW OF ENGINE HOUSING

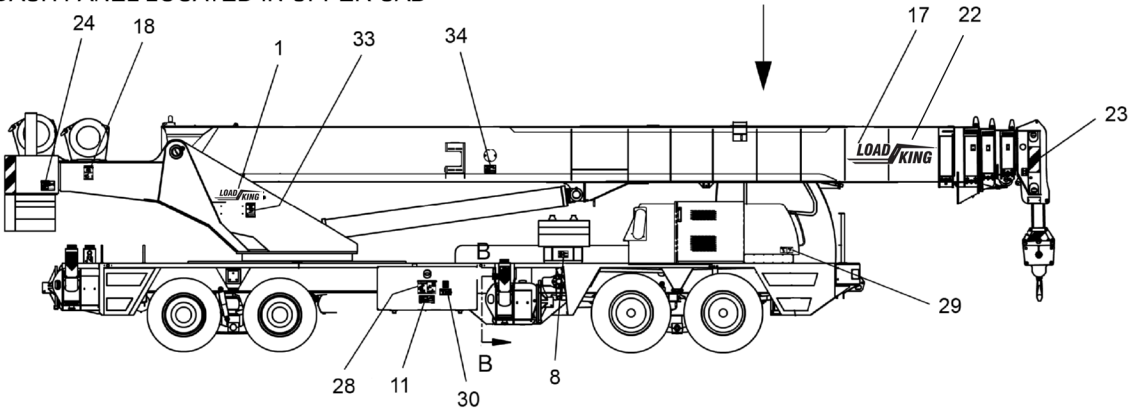



VIEW OF
UPPER CAB THRESHOLD

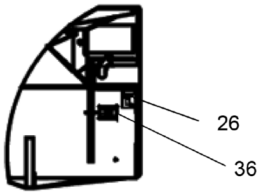

SECTION B-B

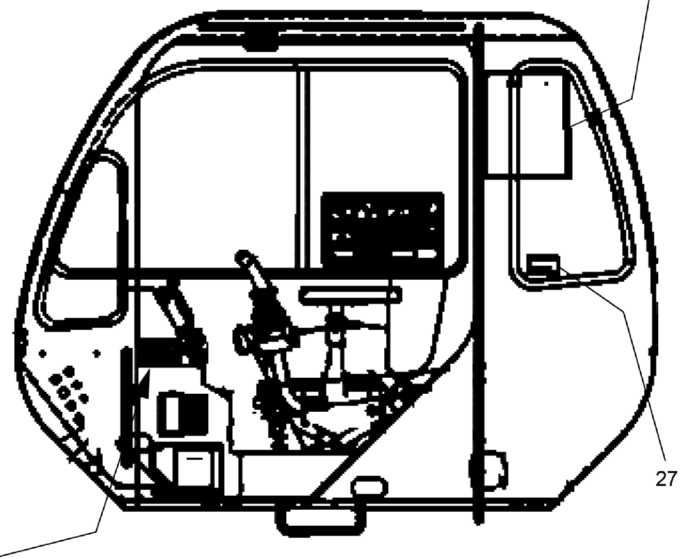

INTERIOR DETAIL
OF UPPER CAB

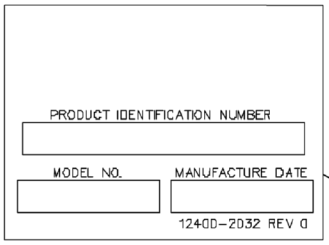

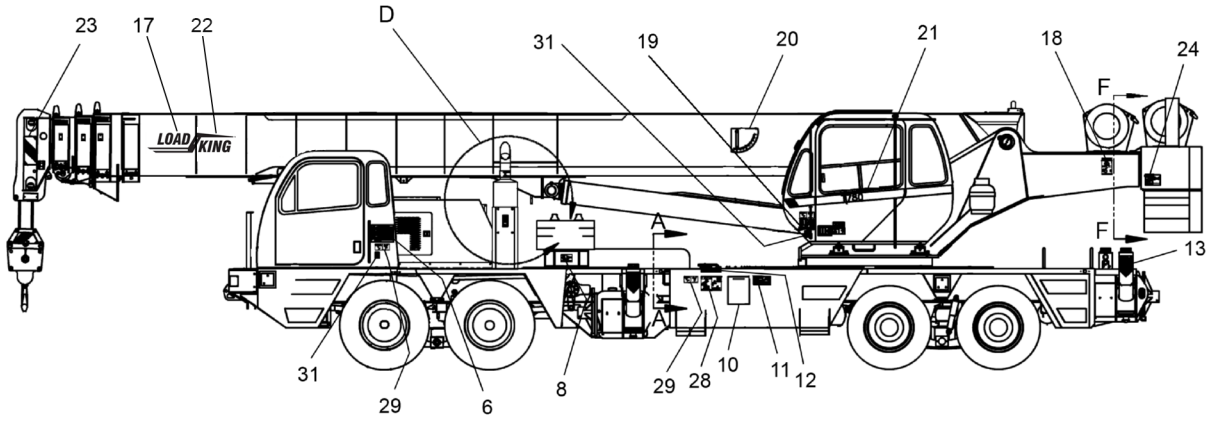

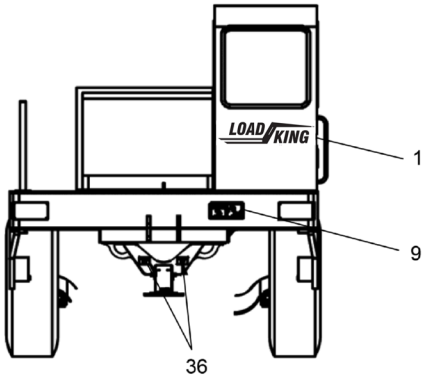

FRONT VIEW OF MACHINE

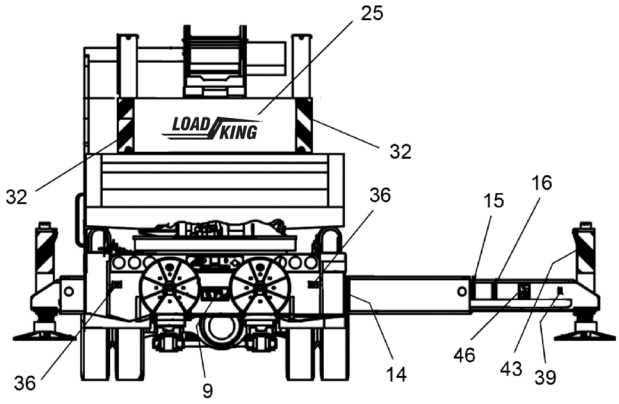

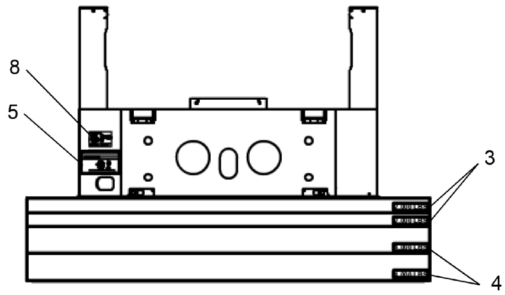

SECTION F-F

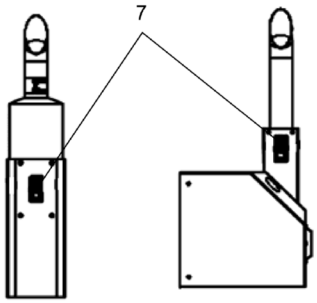

DETAIL D



LOCATE ON SHROUD BY ENGINE FAN

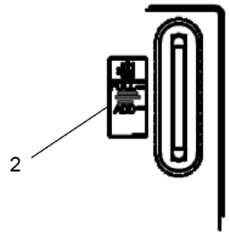

SECTION A-A

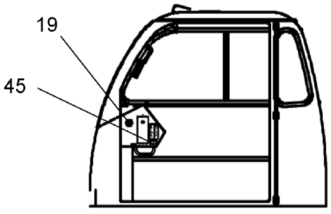

INTERIOR DETAIL OF LOWER CAB

WHEN ORDERING PARTS, SPECIFY MODEL NUMBER, SERIAL NUMBER AND DESCRIPTION OF PARTS REQUIRED

REF	PART NO.	DESCRIPTION	QTY
	722A0028-2 (Rev. AE)	*Paint & Marking*	
1	1007066	5 INCH LOADKING DECAL	1
2	12400-976	Decal, Hydraulic oil level	1
3	12400-985	Decal, 2000 LBS.	2
4	12400-986	Decal, 4000 LBS.	2
5	12400-854	Decal, HYD CTWT Removal	1
6	12400-943	Lube Chart	1
7	T127330	Decal, Burn Hazard	1
8	1006842	Decal, Danger Crush	3
9	1006855	Decal, Electrocution	2
10	12260-524	Decal, Hand Signal	2
11	1006841	Decal, Entanglement	2
12	12260-75	Decal, HYD Oil	1
13	12400-1514	Decal, O.R. Crush Hazard	4
14	714 0494-1	Striping, Yellow 2 X 10	8
15	714 1522-5	Yellow Strip 2 X 5	8
16	714 1521-3	Red Strip 2 X 5	8
17	1008677	480-126 LEFT LK LOGO BOOM DECAL.	1
18	651-00424	Decal, Crush Hazard Winch	2
19	1007065	Decal, Product Registration	1
20	1006843	Decal, Boom Angle	1
21	T106639	Decal, Cab 480-126	1
22	1008681	480-126 RIGHT LK LOGO BOOM DECAL.	1
23	T105658	Decal, Boom Stripe	2
24	12400-1505	Decal, Danger Tail Swing	2
25	1007067	10 INCH LOADKING DECAL	1
26	12400-1510	Decal, Air Tank	1
27	12260-843	Decal, Do Not Remove	1
28	12400-1512	Decal, Electrocution	2
29	12400-1516	Decal, Fall Hazard	3
30	12400-1508	Decal, Diesel Fuel, Explosion	1
31	12400-1003	Decal, Fire Extinguisher	2
32	1006859	Decal, CWT Stripe	2
33	12400-1503	Decal, Skin Injection	1
34	12400-1515	Decal, Jib Retaining Pin	1
35	12400-1506	Decal, Fan Warning	1
36	T135919	Decal, Tie Down Indicator	6
37	12400-1504	Decal, Hot Fluids	1
38	12400-984	Decal, Back Stability	1
39	T135917	Decal, Lift Point Indicator	4
40*	3900-165	Paint, White	5 GAL
41*	3900-166	Paint, Gray	5 GAL
42	1007087	Decal, Serial No	1
43	1006860	Decal, O.R. Stripe	4
44	714 0622	Anti Slip Tape, Upper Door Jam	2
45	CTOS-CIC	Decal, Product Support	1
46	1006834	Decal, Fall Hazard, O.R.	8

* ITEM NOT SHOWN IN ILLUSTRATION

WHEN ORDERING PARTS, SPECIFY MODEL NUMBER, SERIAL NUMBER AND DESCRIPTION OF PARTS REQUIRED

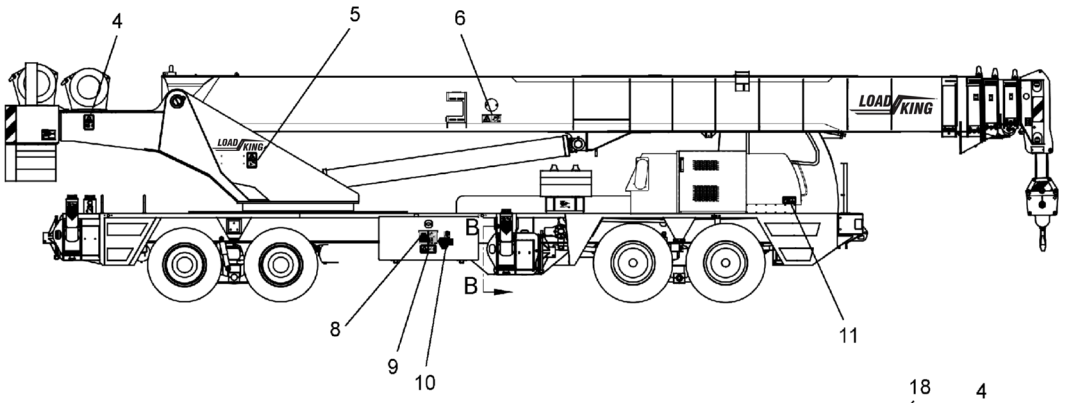

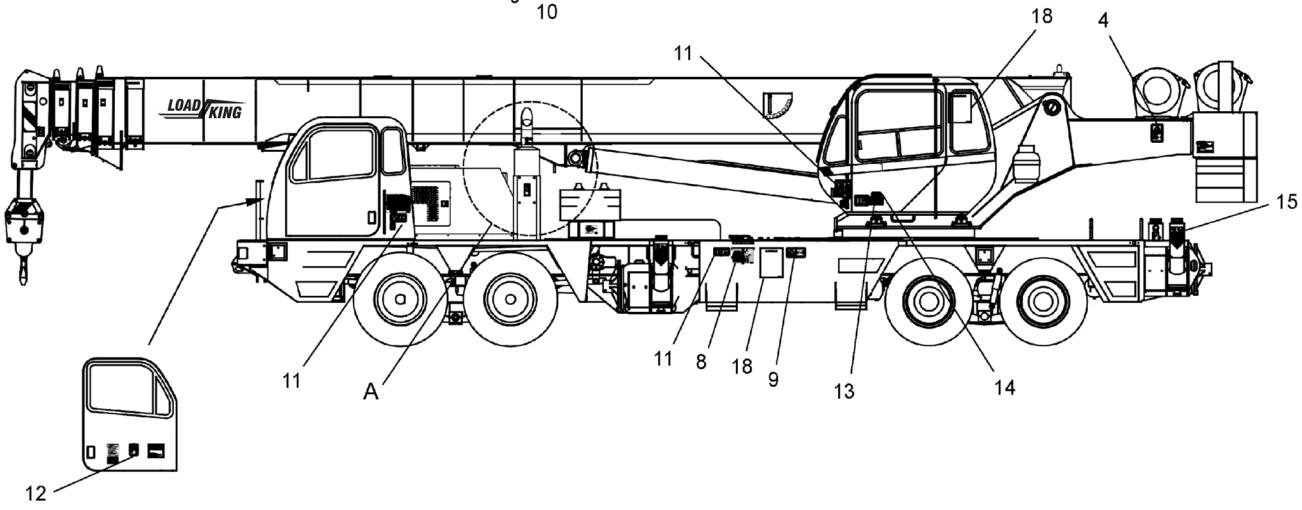

INTERIOR DETAIL OF
LOWER CAB DOOR

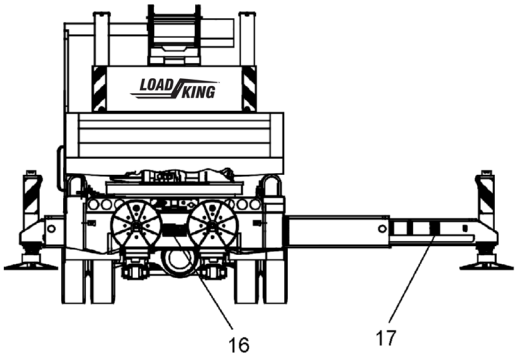

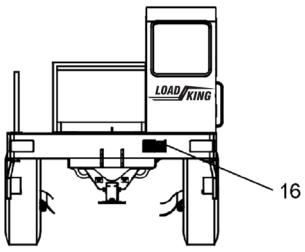

FRONT VIEW OF MACHINE

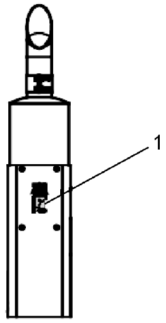

DETAIL A

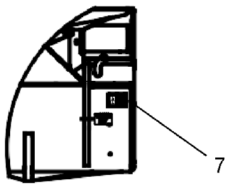

SECTION B - B

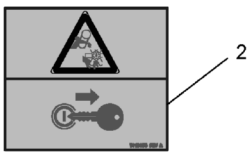

LOCATE ON SHROUD
BY ENGINE FAN

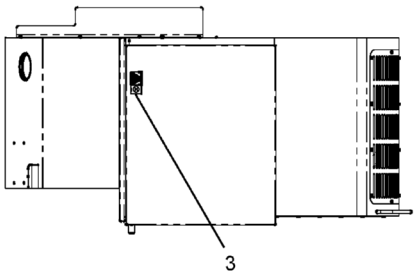

TOP VIEW OF ENGINE HOUSING

WHEN ORDERING PARTS, SPECIFY MODEL NUMBER, SERIAL NUMBER AND DESCRIPTION OF PARTS REQUIRED

REF	PART NO.	DESCRIPTION	QTY
	T152649 (Rev. B)	*ISO Decals Assembly*	
1	T152648	Decal, Burn Hazard	1
2	T119175	Decal, Fan Warning	1
3	T125182	Decal, Hot Fluids	1
4	1006877	Decal, Crush Hazard Winch	2
5	1007048	Decal, Skin Injection	1
6	T108935	Decal, Jib Retaining Pin	1
7	12400-1124	Decal, Air Tank	1
8	T119174	Decal, Electrocution	2
9	1007046	Decal, Entanglement	2
10	T119179	Decal, Diesel Fuel, Explosion	1
11	1007047	Decal, Fall Hazard	4
12	1007045	Decal, Booster Cable	1
13	T119182	Decal, No Riders	1
14	1007050	Decal, Personnel Handeling	1
15	1007077	Decal, O.R. Crush Hazard	4
16	T151301	Decal, Electrocution	2
17	T137071	Decal, Fall Hazard, O.R.	8
18	T158369	Decal, Hand Signals	2

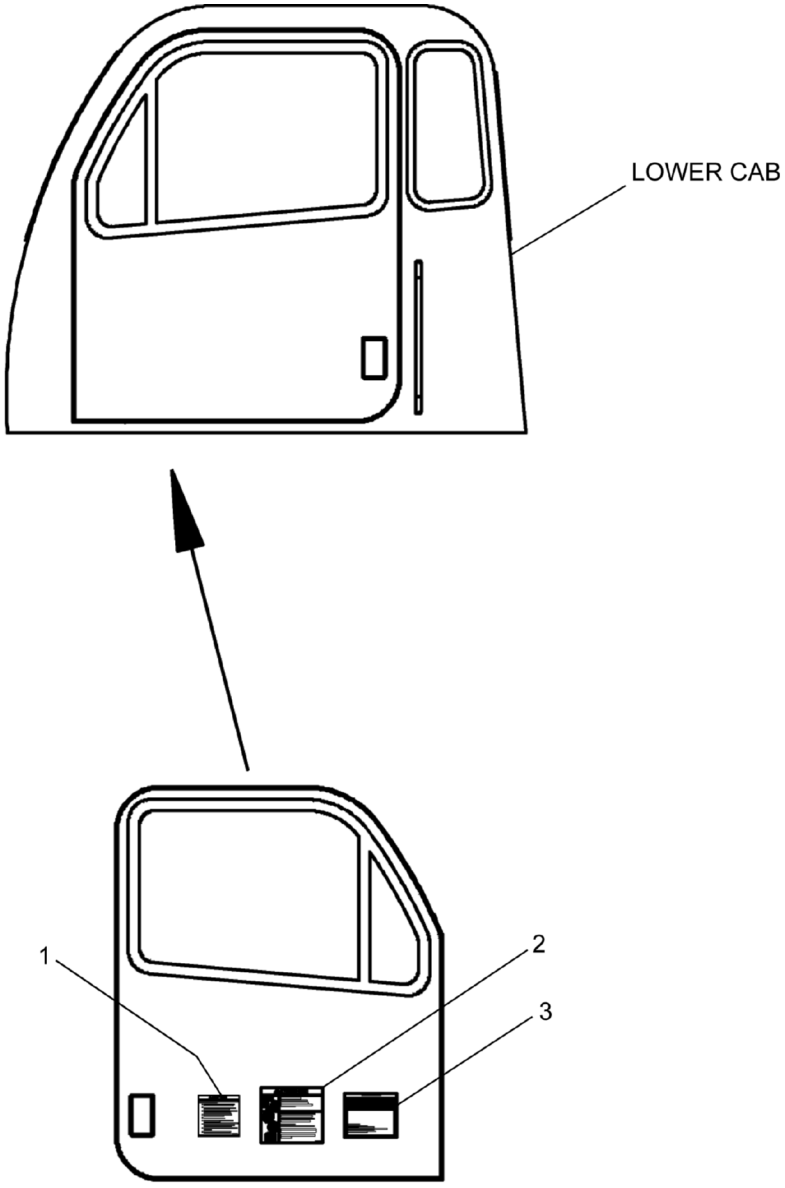

INTERIOR DETAIL OF LOWER CAB DOOR

REF	PART NO.	DESCRIPTION	QTY
	T150876-Decals* (Rev. 00)	*Lower Cab Decals (W/ Supplier Cab)*	
1	12400-1511	Alternator Caution	1
2	12400-1501	Booster Cable	1
3	12260-1076	Tire Capacity Chart	1

* NOT PURCHASABLE AT THIS LEVEL

WHEN ORDERING PARTS, SPECIFY MODEL NUMBER, SERIAL NUMBER AND DESCRIPTION OF PARTS REQUIRED

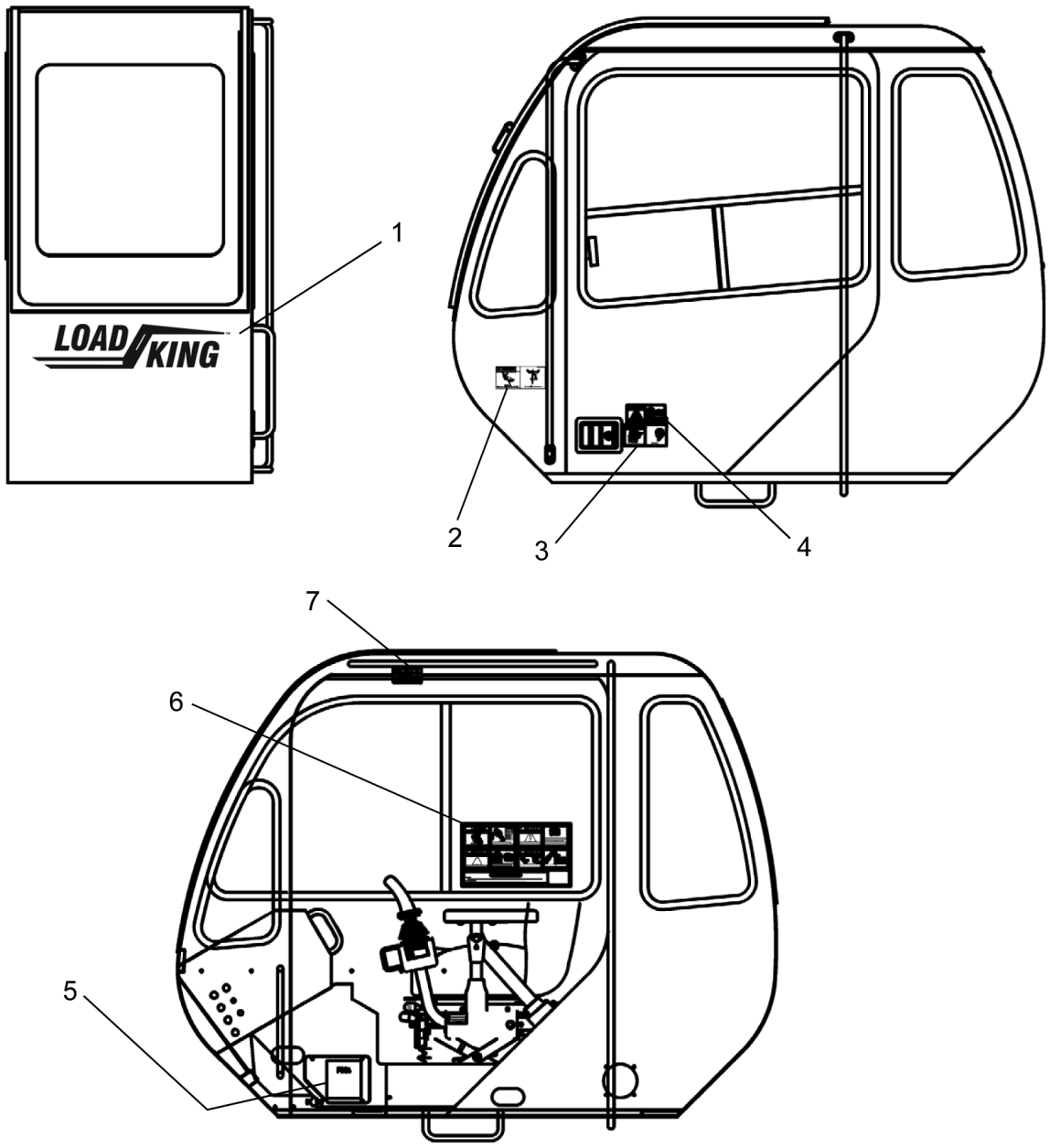

REF	PART NO.	DESCRIPTION	QTY
	T120173-Decals* (Rev. 00)	*Upper Cab Decals (W/ Supplier Cab)*	
1	1007066	5 INCH LOADKING DECAL	1
2	12400-1516	Decal, Fall Hazard	1
3	12400-1502	Decal, No Riders	1
4	12400-1500	Decal, Personnel Handeling	1
5	12260-96	Decal, PCSA Standard	1
6	T133238	Decal, Window	1
7	1006856	Decal, Window Latch	1

* NOT PURCHASABLE AT THIS LEVEL

WHEN ORDERING PARTS, SPECIFY MODEL NUMBER, SERIAL NUMBER AND DESCRIPTION OF PARTS REQUIRED

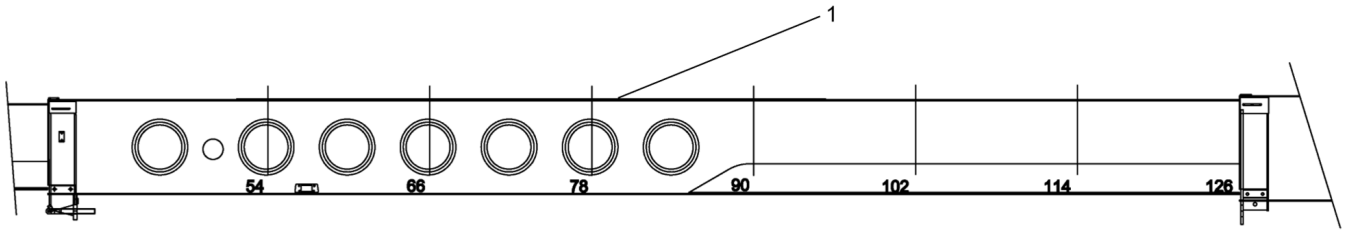

REF	PART NO.	DESCRIPTION	QTY
	721A0156 (Rev. 00)	*Boom Marking 126' English*	
1	12400-971	Decal, 126' Boom English	1

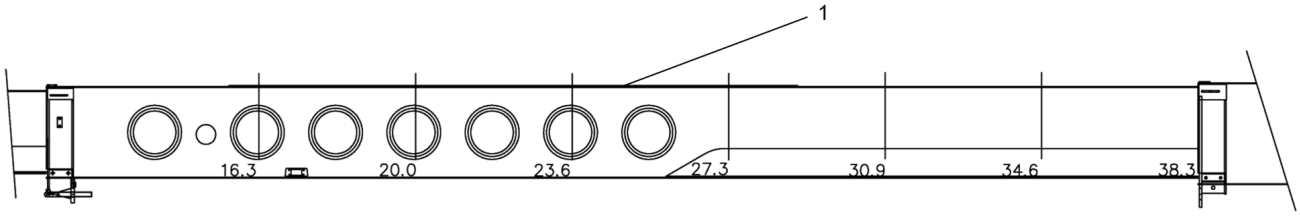

REF	PART NO.	DESCRIPTION	QTY
	721A0157 (Rev. 00)	*Boom Marking 126' Metric*	
1	12400-972	Decal, 126' Boom Metric	1

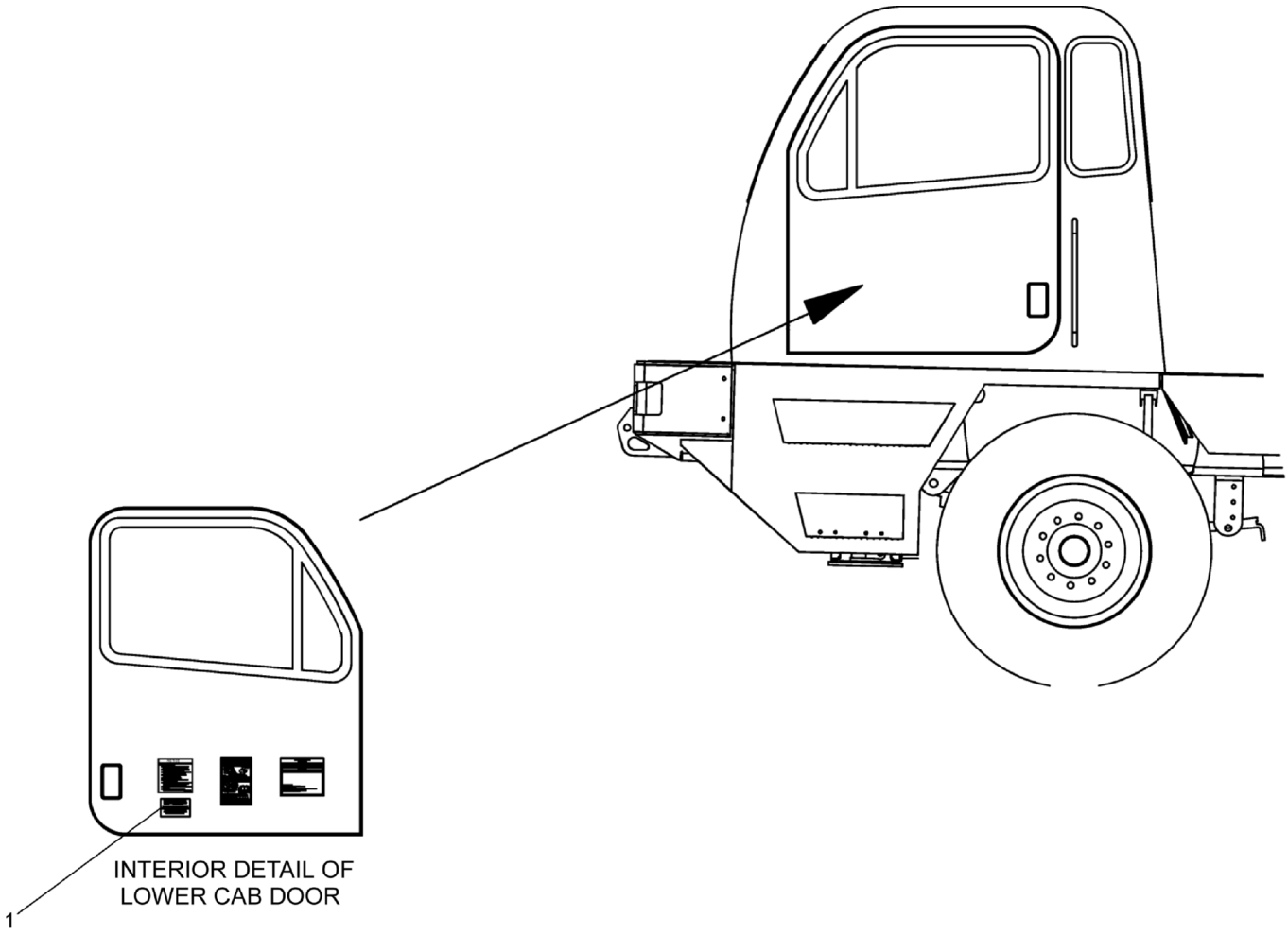

REF	PART NO.	DESCRIPTION	QTY
	T119918 (Rev. D)	*Tier 3 Emissions Decal Installation*	
1	T119889	Decal, Tier 3 Emissions	1

CHAPTER NO. 5

FILTERS



REF	PART NO.	DESCRIPTION	QTY
	480-126-2017-FILTERS* (Rev. 00) *FILTERS*		
1	**T132942-Filters***	Filter (Export-Mercedes Benz) (see page 562)	REF
2	**T148338-Filters***	Filter (Domestic-Detroit Diesel) (see page 565)	REF

* NOT PURCHASABLE AT THIS LEVEL

WHEN ORDERING PARTS, SPECIFY MODEL NUMBER, SERIAL NUMBER AND DESCRIPTION OF PARTS REQUIRED

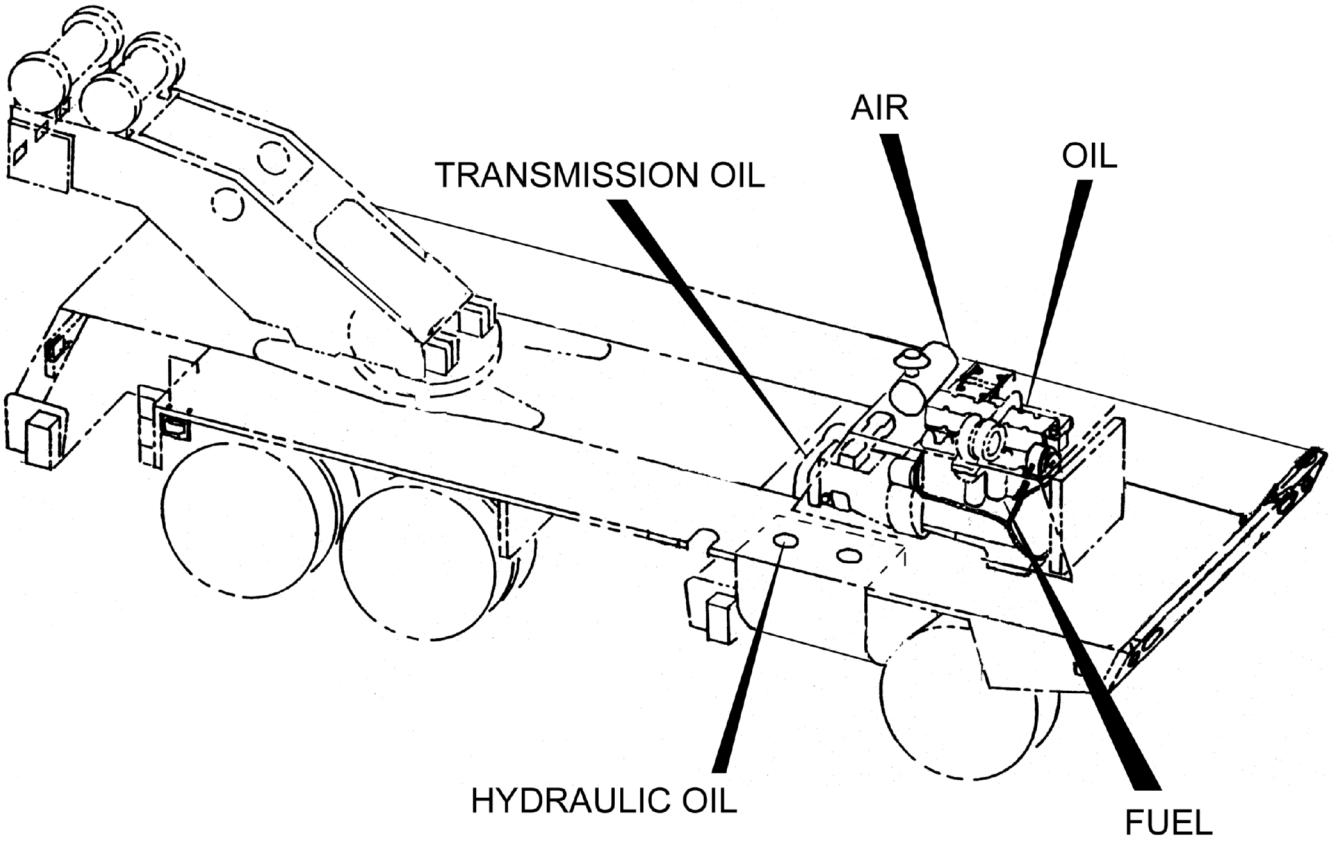
AIR
TRANSMISSION OIL
OIL
HYDRAULIC OIL
FUEL

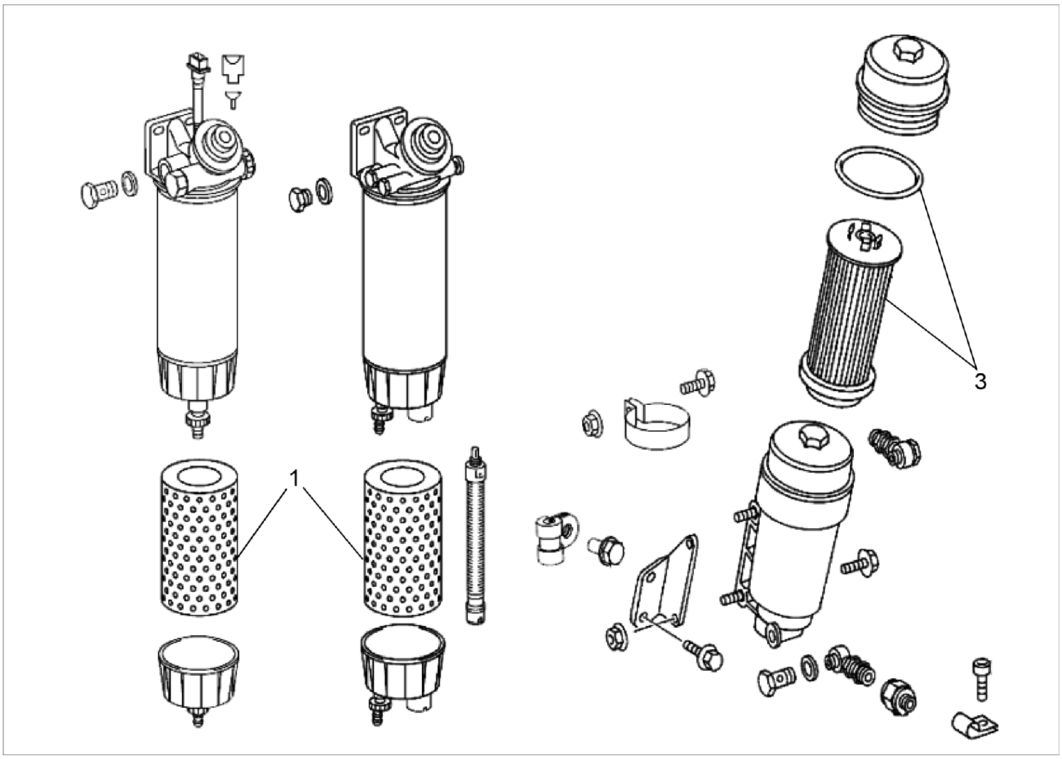
1
3

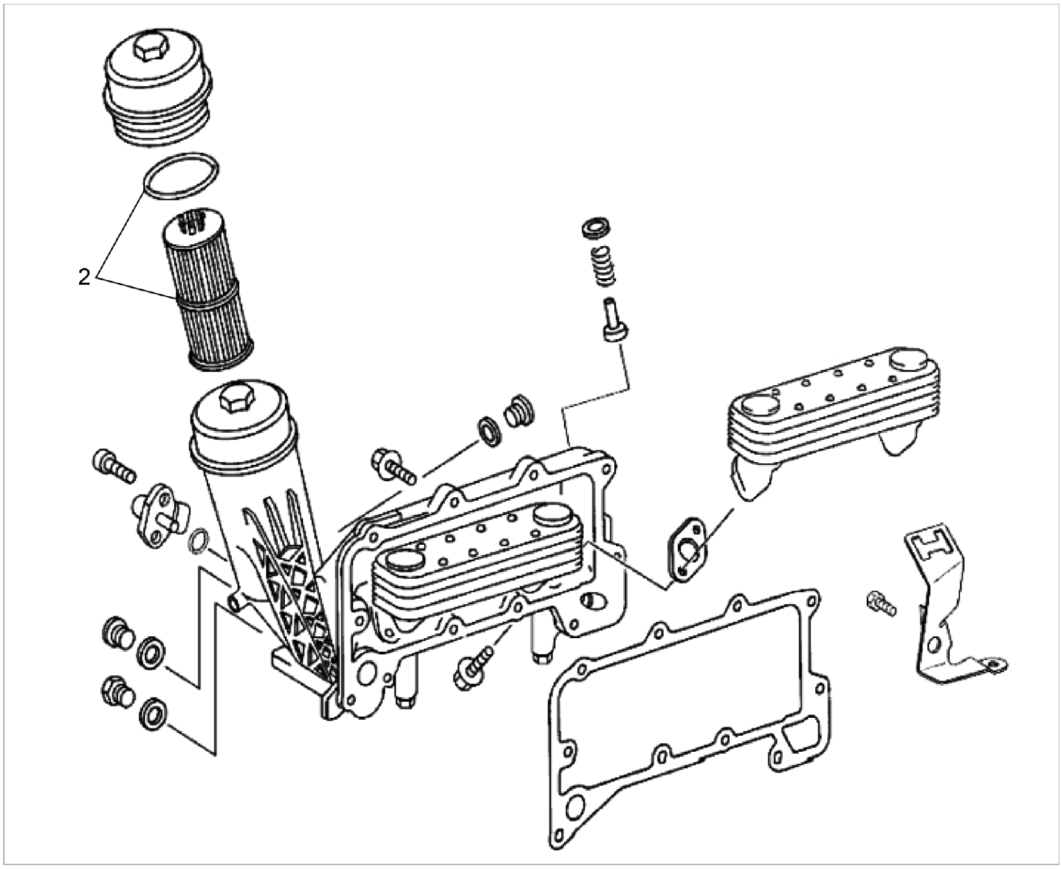
2

REF	PART NO.	DESCRIPTION	QTY
	T132942-Filters* (Rev. 00)	*Filter (Export-Mercedes Benz)*	
	Carrier Engine	Carrier Engine (Includes items 1 thru 2)	
	Hydraulic Oil Filter	Hydraulic Oil Filter (Includes items 3 thru 4)	
	Eaton-Fuller Transmission	Eaton-Fuller Transmission (Includes items 5)	
	Air Cleaner Assembly	Air Cleaner Assembly (Includes items 6 thru 8)	
1	222792	Primary Fuel Filter W/ Water Separator, Heated (Export Tier 3 OM460LA Engine)	1
2	222794	Oil Filter (Export Tier 3 OM460LA Engine)	1
3	222795	Fuel Filter (US-5410900151) or (Europe-4570900051) (Export Tier 3 OM460LA Engine)	1
4**	709-7783	Filter, Suction	1
5**	708-6449	Filter, Return	2
6**	226434	Oil Filter Element	1
7**	216686	Primary (Large) Filter Element	1
8**	216687	Safety (Small) Filter Element	1
9**	224001	Safety Signal for Safety Filter	1

* NOT PURCHASABLE AT THIS LEVEL
** ITEM NOT SHOWN IN ILLUSTRATION.

WHEN ORDERING PARTS, SPECIFY MODEL NUMBER, SERIAL NUMBER AND DESCRIPTION OF PARTS REQUIRED

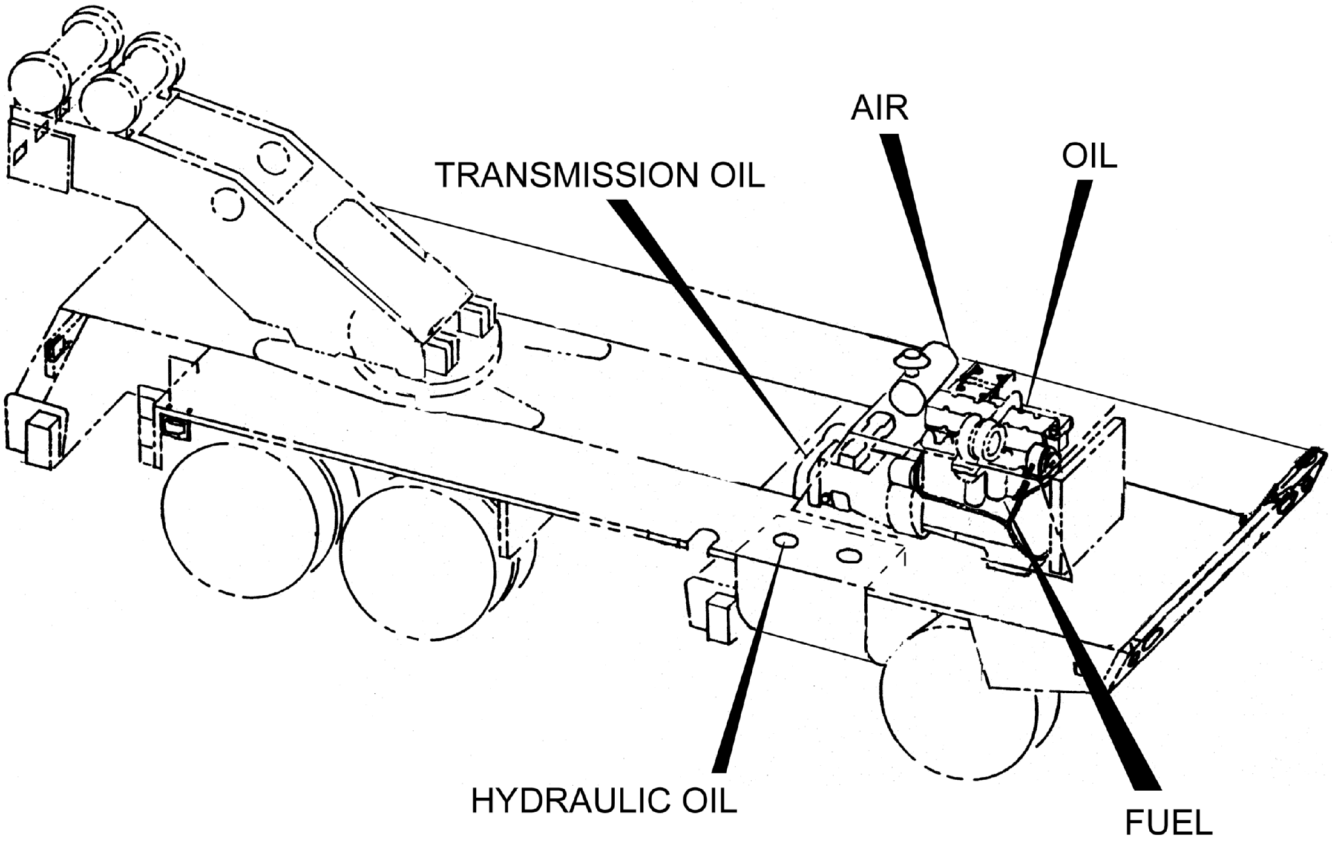
AIR
OIL
TRANSMISSION OIL
HYDRAULIC OIL
FUEL

REF	PART NO.	DESCRIPTION	QTY
	T148338-Filters* (Rev. 00)	*Filter (Domestic-Detroit Diesel)*	
	Carrier Engine	Carrier Engine (Includes items 1 thru 2)	
	Hydraulic Oil Filter	Hydraulic Oil Filter (Includes items 3 thru 4)	
	Eaton-Fuller Transmission	Eaton-Fuller Transmission (Includes items 5)	
	Air Cleaner Assembly	Air Cleaner Assembly (Includes items 6 thru 8)	
1	224601	Fuel Filter	1
2	228029	Oil Filter	1
3	709-7783	Filter, Suction	1
4	708-6449	Filter, Return	2
5	226434	Oil Filter Element	1
6	216686	Primary (Large) Filter Element	1
7	216687	Safety (Small) Filter Element	1
8	224001	Safety Signal for Safety Filter	1

* NOT PURCHASABLE AT THIS LEVEL

WHEN ORDERING PARTS, SPECIFY MODEL NUMBER, SERIAL NUMBER AND DESCRIPTION OF PARTS REQUIRED

CHAPTER NO. 6

MANUALS



REF	PART NO.	DESCRIPTION	QTY
	480-126-2017-MANUALS* (Rev. 00)	*MANUALS*	
1	**1007554**	STINGER 480-126 MANUAL PACK, ENGLISH (see page 570)	1
1A	**1025353**	STINGER 480-126 MANUAL PACK, ENGLISH (see page 571)	1
1B	**1026214**	STINGER 480-126 MANUAL PACK, FRENCH (see page 572)	1
1C	**1026215**	STINGER 480-126 MANUAL PACK, PORTUGUESE (see page 573)	1

* NOT PURCHASABLE AT THIS LEVEL

WHEN ORDERING PARTS, SPECIFY MODEL NUMBER, SERIAL NUMBER AND DESCRIPTION OF PARTS REQUIRED

REF	PART NO.	DESCRIPTION	QTY
	1007554 (Rev. 00)	*Manual Pack-English*	
1	1025359	480-126 FLASHDRIVE - OPERATOR'S, PARTS, SHOP & SCHEMATICS, ENGLISH	1
2	1025357	480-126 Parts Manual (2017 & Export Tier 3)	1
3	1025356	STINGER 480-126 OPERATOR'S MANUAL, ENGLISH (2017 & Export Tier 3)	1
4	12261-954	480-126 Shop Manual-CD (2017 & Export Tier 3)	1
5	MC-1407	AEM Safety Manual	1
6	DVD-CR	AEM Safety Video	1
7	T144483	Load King Limited Product Warranty Certificate-24 Month	1

REF	PART NO.	DESCRIPTION	QTY
	1025354 (Rev. 00)	*Manual Pack-Spanish-LA*	
1	1025360	480-126 FLASHDRIVE - OPERATOR'S, PARTS, SHOP & SCHEMATICS, SPANISH	1
2	1025357	480-126 Parts Manual (2017 & Export Tier 3)	1
3	102360	STINGER 480-126 OPERATOR'S MANUAL, SPANISH (2017 & Export Tier 3)	1
4	12261-954	480-126 Shop Manual-CD (2017 & Export Tier 3)	1
5	MC-1407	AEM Safety Manual	1
6	DVD-CR	AEM Safety Video	1
7	T144484	Load King Limited Product Warranty Certificate-24 Month	1

REF	PART NO.	DESCRIPTION	QTY
	1026214 (Rev. 00)	*Manual Pack-French-CA*	
1	12261-979	CD-Operator's & Parts Manuals	1
2	12261-950	480-126 Parts Manual (2017 & Export Tier 3)	1
3	12261-956	T500, 480-126 Operator's Manual (2017 & Export Tier 3)	1
4	12261-954	480-126 Shop Manual-CD (2017 & Export Tier 3)	1
5	DVD-CR	AEM Safety Video	1
6	MC-1407	AEM Safety Manual	1
7	T144486	Load King Limited Product Warranty Certificate-24 Month	1

REF	PART NO.	DESCRIPTION	QTY
	1026215 (Rev. 00)	*Manual Pack-Portuguese-BR*	
1	12261-978	CD-Operator's & Parts Manuals	1
2	12261-950	480-126 Parts Manual (2017 & Export Tier 3)	1
3	12261-976	T500, 480-126 Operator's Manual (2017 & Export Tier 3)	1
4	12261-954	480-126 Shop Manual-CD (2017 & Export Tier 3)	1
5	MC-1407	AEM Safety Manual	1
6	DVD-CR	AEM Safety Video	1
7	T144485	Load King Limited Product Warranty Certificate-24 Month	1

CHAPTER NO. 7

RECOMMENDED SPARE PARTS

RECOMMENDED SPARE PARTS FOR TIER 3 & TIER 4F

Part no.	Description	Qty	Tier 3	Tier 4	Page
420 4411	Red Clearance Light	1	✓	✓	448
420 4412	Yellow Clear Light	1	✓	✓	448
420 4974	Light, Strobe	1	✓	✓	488
434-4020	Gauge Level	1	✓	✓	442
441 6828	Relay 20/30 AMP	1	✓	✓	156
441-6828	Relay	1	✓	✓	158
441-6834	Switch - PROX	1	✓	✓	255
442-2201	Switch, Roller	1	✓	✓	498
445-1074	Switch Stop Light	1	✓	✓	370
707 5460	Spotlight BALKAMP 7301506	1	✓	✓	490
707-4058	Shim	1	✓	✓	116
707-8788	Shim	1	✓	✓	107
707F8530	Pin	1	✓	✓	107
708-0260	Shim	1	✓	✓	107
708-6449	Filter, Return	1, REF	✓	✓	442, 564, 566
709-1564	Pad	1	✓	✓	112
709-6672	Wear Pad	1	✓	✓	92
709-7257	Wear Pad	1	✓	✓	92
709-7269	Wear Pad	1	✓	✓	92
709-7279	Wear Pad	1	✓	✓	92
709-7281	Wear Block	1	✓	✓	92
709-7290	Pin	1	✓	✓	107, 116
709-7297	Shim	1	✓	✓	107
709-7298	Shim	1	✓	✓	107
709-7384	Wear Pad 2.50 X 1.875 X 0.50	1	✓	✓	112
709-7767	Wear Bar	1	✓	✓	92
709-7783	Filter, Suction	1, REF	✓	✓	442, 564, 566
709-7821	Switch	1	✓	✓	110, 496
710-0052	Shim	1	✓	✓	107
712-0086	Wear Pad	1	✓	✓	92
714 0621	Switch	1	✓	✓	201
717 1198	Fuse, Velocity	1	✓	✓	201
717-0744	Air Valve	1	✓	✓	391
717-1255	Bushing, Eccentric	1	✓	✓	92
718-0157	Cylinder - Counterweight	1	✓	✓	121, 125, 127
718-0225	Sheave, 0.75 DIA Rope	1	✓	✓	497
718-0620	Wear Pad	1, 2	✓	✓	241, 243, 251
718-0728	Outrigger Jack Cylinder	2	✓	✓	243
718-0819	Cylinder	1	✓	✓	28
718-0879	Cylinder, Jack (SEABEE)	2	✓	✓	251
718-0929	Shim, Inner	2	✓	✓	243, 251

RECOMMENDED SPARE PARTS FOR TIER 3 & TIER 4F

Part no.	Description	Qty	Tier 3	Tier 4	Page
718-0931	Shim, Outer	2	✓	✓	243, 251
718A1013	Sheave ASSY 3/4 Wire Rope	1	✓	✓	151, 107, 116
719-0201	Switch, Swing Lock	1	✓	✓	81
719-0922	Dual Lever Single Axis Joystick, Right	1	✓	✓	215
719-0923	Dual Lever Single Axis Joystick, Left	1	✓	✓	215
719-0947	Single Lever Dual Axis Joystick, Right	1	✓	✓	207
719-0948	Single Lever Dual Axis Joystick, Left	1	✓	✓	207
720-0441	Valve, Diverter	1	✓	✓	433
721-0021	Wear Pad, CYL Cradle	1	✓	✓	93
721-0023	Cylinder, Boom Extend	1	✓	✓	93
721-0103	Wear Block 6.00 X 2.00 X 0.75	1	✓	✓	93
721-0107	Wear Pad	1	✓	✓	93
721-0108	Wear Pad	1	✓	✓	93
721-0217-1	Wear Pad	1	✓	✓	93
721-0217-2	Wear Pad	1	✓	✓	93
721-0217-3	Wear Pad	1	✓	✓	93
721-0240	Wear Pad	1	✓	✓	93
721A0088	Sheave with Bushing	1	✓	✓	93
721A0090	Sheave W/Bushing	1	✓	✓	93
721A0092	Sheave W/ Bushing	1	✓	✓	93
721A0094	Sheave W/Bushing	1	✓	✓	93
721A0358	Sheave 3/4"	1	✓	✓	93
1219-213	Valve, Relief	1	✓	✓	422
1221-152	1.75" Wide Rubber Insulator	1	✓	✓	372
1223-450	Switch Pressure	1	✓	✓	370
1223-505	Light, Amber	1	✓	✓	489
1223-547	Switch, Pressure	1	✓	✓	367, 391
1223-824	Battery, 31-950T	1	✓	✓	448
1223-858	Switch, Ignition (CH751)	1	✓	✓	81, 367, 391
1223-864	Tail Light (Red)	1	✓	✓	448, 537
1223-866	Grommet	1	✓	✓	448, 537
1223-945	Switch	1	✓	✓	538
1223-981	EI-Stop Switch	1	✓	✓	81, 509
1223-996	SW, Rocker Or Master	1	✓	✓	81
1223-997	SW, Rocker Outrig	1	✓	✓	81
1223-998	SW Rocker Outrig	1	✓	✓	81
1223-1002	SW Rocker Defrost	1	✓	✓	81
1223-1004	Gang Mount Center	1	✓	✓	367
1223-1005	Gang Mount End	1	✓	✓	367
1223-1011	SW Head Light	1	✓	✓	81, 367, 391
1223-1012	Switch, Work Lights, Rocker	1	✓	✓	487

WHEN ORDERING PARTS, SPECIFY MODEL NUMBER, SERIAL NUMBER AND DESCRIPTION OF PARTS REQUIRED

RECOMMENDED SPARE PARTS FOR TIER 3 & TIER 4F

Part no.	Description	Qty	Tier 3	Tier 4	Page
1223-1025	SPST Toggle Switch	1	✓	✓	160
1223-1026	Switch, Beacon	1	✓	✓	488, 489
1223-1029	SW Rocker Wiper	1	✓	✓	81, 367, 391
1223-1030	SW Rocker Washer	1	✓	✓	81, 367, 391
1223-1031	SW Rocker Heater	1	✓	✓	367, 391
1223-1032	SW Rocker Engine Brake	1	✓	✓	367, 391
1223-1033	SW Rocker Cruise On	1	✓	✓	367, 391
1223-1034	SW Rocker Set Cruise	1	✓	✓	367, 391
1223-1035	SW Rocker PTO Auto	1	✓	✓	367, 391
1223-1036	Rocker Switch	1	✓	✓	521
1223-1044	SW, Rocker FRT Jack	1	✓	✓	81
1223-1051	Rocker Switch	1	✓	✓	521
1223-1060	Switch, Pressure	1	✓	✓	367, 391
1223-1067	Work Light	1	✓	✓	487
1223-1081	SW Rocker MOM On/Off	1	✓	✓	391
1243-50	Filter Minder	1	✓		351
1245-185	Kit, Light	1	✓	✓	391
1245-186	Sender	1	✓	✓	372
12019-96	Valve, Air, FNPT-8/CHECK/MNPT-8	1	✓	✓	422
12019-323	Switch-Bendix	1	✓	✓	370
12019-386	Valve, Treadle	1	✓	✓	370
12019-533	Valve Relay R-14	1	✓	✓	422
12019-731	Air Switch	1	✓	✓	367, 391
12019-910	Air Valve	1	✓	✓	286
12260-75	Decal, HYD Oil	1	✓	✓	547, 550
12260-96	Decal, PCSA Standard	1	✓	✓	554
12260-524	Decal, Hand Signal	1	✓	✓	547, 550
12260-843	Decal, Do Not Remove	1	✓	✓	547, 550
12400-850	Decal, Front Jack	1	✓	✓	538
12400-854	Decal, HYD CTWT Removal	1	✓	✓	547, 550
12400-925	Decal, Boom Float	1	✓	✓	535
12400-936	Decal, Remote Outriggers	1	✓	✓	538
12400-940	Decal, Lube/Throttle	1	✓	✓	60
1006843	Decal, Boom Angle	1	✓	✓	547, 550
12400-976	Decal, HYD Oil Level	1	✓	✓	547, 550
12400-984	Decal, Back Stability	1	✓	✓	547, 550
12400-985	Decal, 2000 LBS.	1	✓	✓	547, 550
12400-986	Decal, 4000 LBS.	1	✓	✓	547, 550
12400-1500	Decal, Personnel Handeling	1	✓	✓	554
12400-1502	Decal, No Riders	1	✓	✓	554
12400-1503	Decal, Skin Injection	1	✓	✓	547, 550

RECOMMENDED SPARE PARTS FOR TIER 3 & TIER 4F

Part no.	Description	Qty	Tier 3	Tier 4	Page
12400-1504	Decal, Hot Fluids	1	✓	✓	547, 550
12400-1505	Decal, Danger Tail Swing	1	✓	✓	547, 550
12400-1506	Decal, Fan Warning	1	✓	✓	547, 550
1006841	Decal, Entanglement	1	✓	✓	547, 550
12400-1508	Decal, Diesel Fuel, Explosion	1	✓	✓	547, 550
12400-1510	Decal, Air Tank	1	✓	✓	547, 550
12400-1511	Alternator Caution	1	✓	✓	553
12400-1514	Decal, O.R. Crush Hazard	1	✓	✓	547, 550
12400-1515	Decal, Jib Retaining Pin	1	✓	✓	547, 550
12400-1516	Decal, Fall Hazard	1	✓	✓	547, 550, 554
1006842	Decal, Danger Crush	1	✓	✓	547, 550
12400-2032	Decal, Serial No	1	✓	✓	547, 550
215419	Seal	1	✓	✓	46
215441	Oil Seal	1	✓	✓	46
215844	Switch, Fan	1	✓	✓	162
216048	Switch, Binary Pressure	1	✓	✓	196
216686	Primary (Large) Filter Element	REF	✓	✓	564, 566
216687	Safety (Small) Filter Element	REF	✓	✓	564, 566
216744	WJ 2-Speed Motor Kit W/Hardware (12V)	REF, 1	✓	✓	72, 356, 364
216745	Flex Blade, 28" - Black	REF	✓	✓	72
216852	Wiper Motor Assembly	REF	✓	✓	74
216854	Flex Blade, 18"	REF	✓	✓	74
216940	Blade, Black Wide, 20" Flex	1, REF	✓	✓	356, 364
216993	Seal Kit	1	✓	✓	249
217235	Seal Kit Special Soft	1	✓	✓	247
217793	Kit, Switch For Left Arm Only	1	✓	✓	83
218711*	Seal Kit	2	✓	✓	123
218890	Otto SW	1	✓	✓	210, 212
219190	Fuse 5 AMP	Ref, 1	✓	✓	368, 393
219257	Decal, Connection Procedure	1	✓	✓	531
219258	Control Decal	1	✓	✓	531
219259	12 Volt System Decal	1	✓	✓	531
219260	Supply Decal	1	✓	✓	531
219263	Decal, Nelson	1	✓	✓	531
219264	Air Locking Pin Decal	1	✓	✓	531
219269	Webb Wheel Decal	1	✓	✓	531
219270	Brake Lining Decal	1	✓	✓	531
219271	Suspension Decal, (Torque SPEC)	1	✓	✓	531
219272	Suspension Decal, (Safety & INSP.)	1	✓	✓	531
219278	Pinch Point Decal	1	✓	✓	531

RECOMMENDED SPARE PARTS FOR TIER 3 & TIER 4F

Part no.	Description	Qty	Tier 3	Tier 4	Page
219730	3 position Mode Switch W/ Off	1	✓	✓	162
219751	Switch Plate	1	✓	✓	500
220068	Circuit Breaker, 7.5 AMP	Ref, 1	✓	✓	368, 393
220069	Circuit Breaker, 10 AMP	Ref, 1	✓	✓	368, 393
220070	Circuit Breaker, 15 AMP	Ref, 1	✓	✓	368, 393
220071	Circuit Breaker, 25 AMP	Ref, 1	✓	✓	368, 393
220243	Switch, Pressure 625 NO	1	✓	✓	167
220246	Switch, Rocker Lighted	1	✓	✓	162
220586	Clearance Light	1	✓	✓	356
222016	Seal Kit 9.000 7.000	1	✓	✓	97
222417	Secure Bag of Keys	1	✓	✓	204
222792	Primary Fuel Filter W/ Water Separator, Heated (Export Tier 3 OM460LA Engine)	REF	✓		564
222794	Oil Filter (Export Tier 3 OM460LA Engine)	REF	✓		564
222795	Fuel Filter (US-5410900151) or (Europe-4570900051) (Export Tier 3 OM460LA Engine)	REF	✓		564
223076	Switch Bracket	1	✓	✓	500
223823	Switch, 12V Rocker W/ Green LED	1	✓	✓	341
224001	Safety Signal for Safety Filter	REF	✓	✓	564, 566
224601	Fuel Filter	REF		✓	566
225323	Fuse 1 AMP	1	✓	✓	393
225603	Decal	1	✓	✓	358
225604	Decal	1	✓	✓	358
225605	Decal	1	✓	✓	358
225739	Neutral Light Switch	Ref	✓	✓	296
225742	Reverse Light Switch	Ref	✓	✓	296
226050	Case Weld G 6.000 33.250L	1	✓	✓	253
226358	Revguard, Speed Switch	1	✓	✓	510
226434	Oil Filter Element	REF	✓	✓	564, 566
226450	Cylinder	Ref	✓	✓	309
226469	Seal Kit	Ref	✓	✓	299, 322
227022	Kit, Switch For Left Arm Only	1	✓	✓	83
227799	Reverse Light Switch, 2 Pin Plug	Ref	✓	✓	296
228029	Oil Filter	REF		✓	566
228309	Switch, Oil Level W/ DT04-3P; -8	1	✓	✓	194
228761	Seal Kit	1	✓	✓	258
229497	Seal Kit (Includes Items 1 Thru 8)	1	✓	✓	245
229710	Temperature Switch	1	✓	✓	446
A29309	Kit, Seal (Includes items 13, 15, 17 & 18 below)	1	✓	✓	439
1007067	10 INCH LOADKING DECAL	1	✓	✓	547, 550

RECOMMENDED SPARE PARTS FOR TIER 3 & TIER 4F

Part no.	Description	Qty	Tier 3	Tier 4	Page
1007066	5 INCH LOADKING DECAL	1	✓	✓	547, 550, 554
1006865	Decal, Hook Block	1	✓	✓	136, 139, 142
T106639	Decal, Cab 480-126	1	✓	✓	550
T108183	Decal, Cab T775	1	✓	✓	547
T109500	EI-Stop Switch	1	✓	✓	509
T116527	Switch, AC Binary W/ DEUTSCH	1	✓	✓	345, 404
T118093	Decal, OBD	1	✓	✓	388
T118594	Circuit Breaker	1	✓	✓	526
1006855	Decal, Electrocution	1	✓	✓	547, 550
T121256	Cylinder Assembly (Fisher Hydraulics)	2	✓	✓	243, 251
T122638	Pressure Switch	1	✓	✓	524
T124759	Valve, Boom/TELE	1	✓	✓	38
T124760	Valve, Winch	1	✓	✓	38
T130551	Switch, Revguard Speed	1	✓	✓	506
T134119	Filter, Transmission	1	✓	✓	347
T144785	Cylinder, Outrigger, Upper	2	✓	✓	243, 251
T146064	Jack Cylinder (Hengli)	1	✓	✓	255