PARTS MANUAL

LOAD KING

-

28-106

REV B

FEBRUARY 21, 2021

LOAD KING WARRANTY

Load King (herein after referred to as the COMPANY) warrants all products manufactured by it and purchased by you to be free from defects in material and manufacture at the time of shipment, for one

(1) year from date of delivery. The COMPANY will furnish replacements for such parts as the COMPANY finds to have been defective at the time of delivery or, at the COMPANY's option, will make or authorize repairs to such parts, provided that, upon request, such parts are returned, transportation is prepaid to the factory from which they were shipped.

This warranty shall not apply to any Product which has been subjected to misuse, misapplication, overloading, neglect (including but not limited to use of unauthorized parts or attachments), adjustments or repair. Engines, motor, tires, wheels, suspensions, axles, etc. and any accessories furnished with or used in the COMPANY's products, but which are not manufactured by the COMPANY, are not warranted by the COMPANY but are sold only with the express warranty, if any, or the manufacturers thereof. This warranted is limited to the first purchaser/user and is not transferable.

THE FOREGOING IS IN LIEU OF ALL OTHER WARRANTIES, WHETHER EXPRESSED OR IMPLIED (INCLUDING, WITHOUT LIMITATIONS, OF MERCHANTABILITY AND FITNESS OF ANY PRODUCT FOR A PARTICULAR PURPOSE), AND OF ANY OTHER OBLIGATION OR LIABILITY ON THE PART OF THE COMPANY. THERE ARE NO WARRANTIES WHICH EXTEND BEYOND THE DESCRIPTION OF THE FACE THEREOF.

LIMITATION OF LIABILITY

It is expressly understood and agreed by you that the COMPANY's liability for its products, whether due to breach of warranty, or otherwise is limited to the furnishing of such replacement parts, F.O.B.

factory, and the COMPANY will not be liable for any other injury, loss, damage, or expense, whether direct or consequential, including but not limited to loss of use, income, profit, or production, injury to person or increase in cost of operation, spoilage of or damage to material, arising out of or in connection with the sale, installation, use or inability to use, or the repair or replacement of the COMPANY's products.

All used vehicles and/or bodies are sold in the "AS IS" condition and no expressed or implied warranty is made.

All of COMPANY'S Products are of high quality and are manufactured in conformity with the best commercial practices in the various lines. The COMPANY guarantees all Products manufactured by it to be free from defects in material and manufactured at the time of shipment, for one (1) year from date of delivery. In addition, the COMPANY guarantees the portion of the product to be considered structural for one (1) year from date of manufacture.

While Load King, LLC. designs and manufactures its specific equipment configurations to industry standards, it is ultimate responsibility of the buyer/operator to assure that all loads are properly loaded and distributed. All loads must comply with the applicable state and federal load limits.

INSTRUCTIONS FOR ORDERING PARTS

When ordering parts, contact your nearest Load King distributor and give the following information to assure prompt service:

MACHINE IDENTIFICATION:

State the model and Product Identification Number (PIN), located on the plate in the Operator's Cab.

The six digit serial number is shown on a plate on the outside front of the operator's cab for convenient access.

PART IDENTIFICATION:

State the part number, description and quantity required. Do not use the item number. Avoid using the words "Pairs" or "Sets".

REF	PART.NO.	DESCRIPTION	
	T139803	Mirror, Convex	1

SHIPPING INSTRUCTIONS:

State the invoicing address. Unless otherwise specified, invoices will be mailed to the shipping address.

State the correct shipping address and the means of shipment: parcel post, air mail, air freight, UPS, bus, etc.

Load King
7701 Independence Ave, Kansas City, MO 64125
Parts: (816) 241- 8387
Service: (833) 281-7911
Email: info@loadkingmfg.com

USING THIS PARTS BOOK

This Parts Manual has been designed for optimum ease of reading and is the key to Customer-Distributor-Factory communication. Genuine replacement parts, along with interchangeable product improvements as they become available, will keep your machine in a reliable and productive condition.

The following instructions describe the features of the manual and how to use it effectively.

Use this manual also as a supplement to the Operator's Manual and Maintenance Manual when performing service procedures on the machine.

IMPORTANT

This manual lists serviceable parts for **EVERY** machine built of this model designation. Serial numbers are used to identify parts when a product improvement is made or an alternate component is used. **KNOW THE SERIAL NUMBER OF YOUR MACHINE** before searching for replacement parts.

The **PARTS CHAPTER INDEX** shows the functional arrangement of associated parts for the machine. A chapter number identifies the same chapter of parts regardless of model (Chapter 2 is always the Lower Structure). The chapters which apply to the machine are listed in numerical order.

PAGE NUMBERS are in numerical sequence within each parts chapter.

EXPLODED VIEW ILLUSTRATIONS show the relationship of assembled parts. The illustrations are keyed to an accompanying parts list on the same page or on the facing page and are positioned for ease in reading the manual.

LOCATING INDIVIDUAL PARTS

1. Turn to the PARTS CHAPTER INDEX and find the general area of the part in question. (Example: Seat would be found in “Operator’s Cab” chapter 1).

2. Refer to the parts chapter and check to see if a subsequent letter-designated chapter is used. Check the title block on the pages to determine the application of the chapter to your particular machine.

ENGINE	**2**

FILTER	**5**

3. Major assemblies are shown at the beginning of each chapter with page references to component parts breakdowns on the pages which follow. Briefly skim through the chapter to familiarize yourself with the information included in it. Locate the illustration and parts list which pertain to the assembly or part you desire. Compare the serial number of your machine to those which may appear on the page to be sure you are ordering the correct part.

4. Item numbers on the illustration correspond to those in the parts list. Parts not shown with an item number are the same as identical or symmetrical parts with an item number. Parts keyed with an asterisk or other symbol are included in a repair kit. If no part number is shown, these parts cannot be ordered separately.

5. Quantities are shown as required per component assembly unless otherwise noted.

6. If an assembly is listed without any serviceable parts, it must be ordered complete. Serviceable parts of components are listed under the component part or a subsequent page as indicated.

7. All hardware shown without the size listed after the noun name is specially made for the particular application and must not be substituted with standard hardware.

PARTS GROUPS

28-106: TABLE OF CONTENTS

Chapter	Description	Page
1	**28-106 UPPER STRUCTURE**	**15**
	BOOM INSTALLATION ASSEMBLY	19
	BOOM ASSEMBLY 106 FT	22
	CYLINDER ASSEMBLY, SHEAVE ATTACH	33
	EXTENSION CYLINDER ASSEMBLY 106' BOOM	36
	NYLON SHEAVE ASSEMBLY	38
	SHEAVE ASSEMBLY, BOOM RETRACT	39
	SHEAVE ASSEMBLY	40
	OPTIONAL SHEAVE & SPACERS	41
	BOOM REST ASSEMBLY	42
	HOIST CYLINDER	43
	JIB OPTIONS	45
	JIB ASSEMBLY, 30FT SINGLE STAGE	46
	JIB STOWAGE ASSEMBLY	48
	JIB ELECTRICAL, ASSEMBLY (4 FOOT)	50
	OFFSETTABLE JIB ASSEMBLY, PHOENIX	51
	JIB STINGER ASSEMBLY	53
	HOOK BLOCK, LOAD BALL & WIRE ROPE OPTIONS	55
	HOOK BLOCK ASSEMBLY 1 SHEAVE / 15 TON	57
	HOOK BLOCK - 1 SHEAVE/15 TON	58
	HOOK BLOCK ASSEMBLY-3 SHEAVE / 30 TON	60
	HOOK BLOCK ASSEMBLY-2 SHEAVE / 25 TON	61
	HOOK BLOCK - 2 SHEAVE/25 TON	62
	NON-SWIVEL OVERHAUL BALL 7 TON	64
	LOAD BALL, 7 TON	66
	MAINFRAME INSTALLATION	68
	MAIN FRAME - CONSOLE ASSEMBLY	71
	ELECTRICAL SYSTEM CONSOLE CONTROLS	73
	HALF COVER W/DOOR ASSEMBLY	75
	MAINFRAME ACCESS COVER ASSEMBLY	76
	ELECTRICAL ASSEMBLY MAIN FRAME	77
	PIVOT ARM-SWITCH BOX ASSEMBLY	79
	OUTRIGGER CONTROL BOX ASSEMBLY	81
	CONTROL CONSOLE ASSEMBLY	82
	CONTROL LINK ASSEMBLY, BOOM TELE	84
	CONTROL LINK ASSEMBLY, SWING	85
	CONTROL LINK ASSEMBLY, BOOM HOIST	86
	CONSOLE LINK ASSEMBLY, WINCH	87
	MAIN FRAME - TURRET ASSEMBLY	88
	HYD INSTL, NON CONTINUOUS ROTATION COMBINED FLOW WINCH OPTION	90

28-106: TABLE OF CONTENTS

Chapter	Description	Page
	HYDRAULIC INSTALLATION PUMP/TANK (NONCON - CF/MS)	92
	MIDMOUNT TIEDOWN ASSEMBLY	95
	HYDRAULIC RESERVOIR INSTALLATION	96
	KIT, SPLIT FLANGE, C61-32	98
	HYDRAULIC TANK ASSEMBLY	99
	HYDRAULIC INSTALLATION AUX OUTRIGGER (NONCON CF/MS & CONROT CF/MS)	100
	HYDRAULIC INSTALLATION MAIN OUTRIGGER (NONCON CF/MS & CONROT CF/MS)	102
	HYD INSTALLATION MAINFRAME CONSOLE (NONCON-CF)	105
	MAIN OUTRIGGER VALVE ASSEMBLY	108
	HYD INSTL CONSOLE COMBINED FLOW WINCH (CONROT & NONCON)	110
	VALVE SUBASSEMBLY, WINCH	114
	VALVE ASSEMBLY, LMI	116
	VALVE ASSEMBLY	118
	ROTATION GEARBOX ASSEMBLY (OMNIGEAR)	120
	HYDRAULIC INSTL WINCH NONCON COMB FLOW	123
	HYD INSTL, NON CONTINUOUS ROTATION MOTOR SHIFT OPTION	126
	HYDRAULIC INSTALLATION, MAINFRAME - CONSOLE (NONCON-MS)	128
	HYD INSTL CONSOLE MOTOR SHIFT WINCH (CONROT & NONCON)	131
	VALVE SUBASSEMBLY, WINCH	133
	HYDRAULIC INSTALLATION (NON CON-MS) WINCH	135
	WINCH ASSEMBLY (BRADEN)	138
	HYD INSTL, CONTINUOUS ROTATION COMBINED FLOW OPTION	142
	HYDRAULIC INSTALLATION PUMP/TANK (CONROT CF/MS)	144
	HYDRAULIC INSTALLATION, MAINFRAME - CONSOLE (CONROT-CF)	148
	HYDRAULIC SWIVEL INSTALLATION	151
	HYDRAULIC INSTALLATION WINCH (CONROT-CF)	153
	HYD INSTL, CONTINUOUS ROTATION MOTOR SHIFT OPTION	156
	HYDRAULIC INSTALLATION, MAINFRAME - CONSOLE (CONROT-MS)	158
	HYDRAULIC INSTALLATION CON MS WINCH	161
	THROTTLE INSTALLATION OPTION (CUMMINS / MERCEDES / DETROIT)	165
	BUMP THROTTLE INSTALLATION OPTION	166
	INSTALLATION, ATB-LMI	168
	ASSEMBLY, LMI SHEAVE	170
	HARNESS, RCI POWER	171
2	**28-106 LOWER STRUCTURE**	**172**
	TRUCK CHASSIS	177
	FLATBED OPTIONS	179
	FLATBED ASSEMBLY, 22’ STD DUTY STEEL	180
	LADDER KIT INSTALLATION, STEEL BED	181
	FLATBED ASSEMBLY, 22’ STD DUTY WOOD	183

PARTS GROUPS

28-106: TABLE OF CONTENTS

Chapter	Description	Page
	FLATBED ASSEMBLY, 22' SUP DUTY STEEL	184
	FLATBED ASSEMBLY, 22' SUP DUTY WOOD	185
	FLATBED INSTALLATION (STD DUTY)	186
	FLATBED INSTALLATION (SUPER DUTY)	187
	OUTRIGGERS	188
	MAIN OUTRIGGER INSTALLATION	189
	LEG ASSEMBLY, MAIN OUTRIGGER	190
	AUXILIARY OUTRIGGER INSTALLATION	192
	HORIZONTAL AUXILIARY OUTRIGGER ASSEMBLY	194
	AUXILIARY VALVE ASSEMBLY	198
	AUXILIARY VALVE OUTRIGGER	199
	AUXILIARY OUTRIGGER CYLINDER HORIZONTAL (GRAY)	200
	AUXILIARY OUTRIGGER CYLINDER VERTICAL (GRAY)	202
	SUBFRAME INSTALLATION	204
	ELECTRICAL ASSEMBLY SUBFRAME	206
	BRACKETS W/ MUD FLAPS (OPTION 1)	208
	BRACKETS W/O MUD FLAPS (OPTION 2)	209
	HYDRAULIC PUMP OPTIONS	210
	PUMP, TRIPLE	212
	HYDRAULIC PUMP OPTIONS	214
	CONNECTOR KIT	216
	HYDRAULIC PUMP ASSEMBLY (VICKERS)	217
	HYDRAULIC TANK SHUT OFF VALVE INSTALLATION	219
	FIRE EXTINGUISHER INSTALLATION	220
	FRONT BUMPER O/R JACK	221
	FRONT BUMPER OUTRIGGER INSTALLATION (34" FRAME)	222
	FRONT BUMPER OUTRIGGER VALVE	225
	FRONT BUMPER O/R JACK	226
	FRONT BUMPER OUTRIGGER INSTALLATION (46" FRAME)	227
3	**OPTIONAL EQUIPMENT**	**230**
	2 PERSON STEEL PLATFORM INSTALLATION	235
	2 PERSON STEEL PLATFORM ASSEMBLY	236
	PIN ASSEMBLY, 2MAN PLATFORM-LH	239
	PIN ASSEMBLY, 2MAN PLATFORM-RH	240
	RADIO REMOTE ASSEMBLY (OPTION)	241
	ACTUATOR LINKAGE KIT	243
	ACTUATOR-LINKAGE-SUB ASSEMBLY - 3.72	244
	ACTUATOR-LINKAGE-SUB ASSEMBLY - 4.59	245
	ACTUATOR-LINKAGE-SUB ASSEMBLY - 5.46	246
	ACTUATOR-LINKAGE-SUB ASSEMBLY - 6.32	247

28-106: TABLE OF CONTENTS

Chapter	Description	Page
	RADIO REMOTE CONTROL ACTUATOR VALVE ASSEMBLY	248
	RADIO REMOTE TRANSMITTER INSTL W/ 2-MAN STEEL PERSONNEL PLATFORM	249
	TOOL BOX INSTALLATION - 30"	250
	OIL COOLER INSTL, CURB SIDE	252
	OIL COOLER INSTL, STREET SIDE	255
	INCHING WINCH VALVE	257
	HYDRAULIC INSTL, MAIN FRAME ASSY - NON CONTINUOUS COMBINE FLOW	259
	HYD INSTL, CONSOLE CONTROL - CONTINUOUS ROT & NON CONTINUOUS COMBINED FLOW	262
	VALVE ASSEMBLY	265
	MAIN VALVE ASSEMBLY (HUSCO)	267
	OUTRIGGER VALVE	269
	MAINFRAME CONSOLE ASSEMBLY	271
	SWITCH BOX ASSEMBLY, OUTRIGGERS	273
	VGA DISPLAY, GREER INSIGHT	275
	OUTRIGGER, COTROL BOX ASSEMBLY	276
	MAINFRAME TURRET INSTL NON - CONTINUOUS ROTATION	278
	SWING BEARING	280
	COMPUTER GREER A450858 (BEGINNING W/S.N. # 140716)	281
	INCHING VALVE	282
	INCHING WINCH	283
4	**PAINT & MARKING**	**284**
	CONTROL DECALS, M/F, TURRET-ENGLISH	289
	CONTROL DECALS, M/F, TURRET-METRIC	292
	CONTROL DECALS, M/F, TURRET-ENGLISH	295
	CONTROL DECALS, M/F, TURRET-SPANISH	298
	CONTROL DECALS, M/F, TURRET-METRIC	301
	TRUCK, FLATBED & HYD TANK DECALS	304
	BOOM DECALS	307
	JIB DECALS	310
	2-MAN STEEL PLATFORM MANUAL, DECALS (ENGLISH)	311
	2-MAN STEEL PLATFORM & 4TH SECT. DECAL LOCATION (ENGLISH)	312
	2-MAN STEEL PLATFORM MANUAL, DECALS (METRIC)	314
	2-MAN STEEL PLATFORM & 4TH SECT. DECAL LOCATION (METRIC)	315
	SPANISH DECALS KIT	317
5	**MANUALS**	**320**
	MANUAL PACK-ENGLISH	324
	MANUAL PACK-SPANISH	325
	MANUAL PACK-FRENCH	326

PARTS GROUPS

28-106: TABLE OF CONTENTS

Chapter	Description	Page
6	RECOMMENDED SPARE PARTS	327

CHAPTER NO. 1

28-106 UPPER STRUCTURE

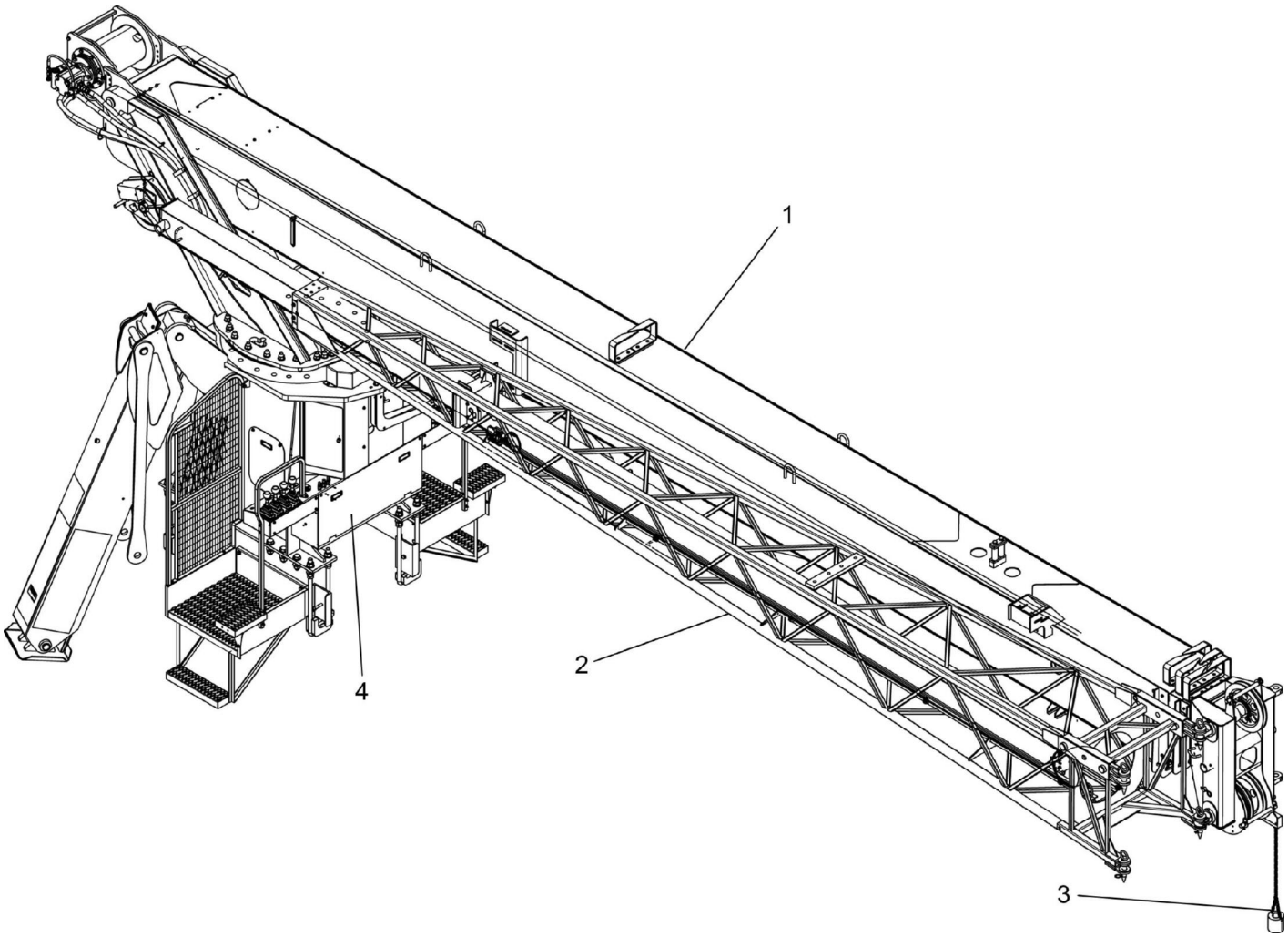
1
2
3
4

REF	PART NO.	DESCRIPTION	QTY
	28-106-UPR-STR (Rev. 00)	*28-106 UPPER STRUCTURE*	
1	**T117747**	Boom Installation Assembly (see page 19)	1
2	**28-106-JIB OPT***	Jib Options (see page 45)	1
3	**28-106-HK/LD BALLS & ROPE***	Hook Block, Load Ball & Wire Rope Options (see page 55)	1
4	**T119102**	Mainframe-Installation (see page 68)	1
5**	**T118784**	HYD INSTL, NONCON - CF WINCH (see page 90)	1
5A	**T118785**	HYD INSTL, NONCON - MS WINCH (see page 126)	1
5B	**T118786**	HYD INSTL, CONROT - CF WINCH (see page 142)	1
5C	**T118788**	HYD INSTL, CONROT - MS WINCH (see page 156)	1
6**	**400-14032-1**	Throttle INSTL Option (see page 165)	1
6A	**400-14032-4**	Throttle INSTL Option (see page 166)	1
7**	**T117601**	Installation, ATB-LMI (see page 168)	1

* NOT PURCHASABLE AT THIS LEVEL
** NOT SHOWN IN ILLUSTRATION

WHEN ORDERING PARTS, SPECIFY MODEL NUMBER, SERIAL NUMBER AND DESCRIPTION OF PARTS REQUIRED

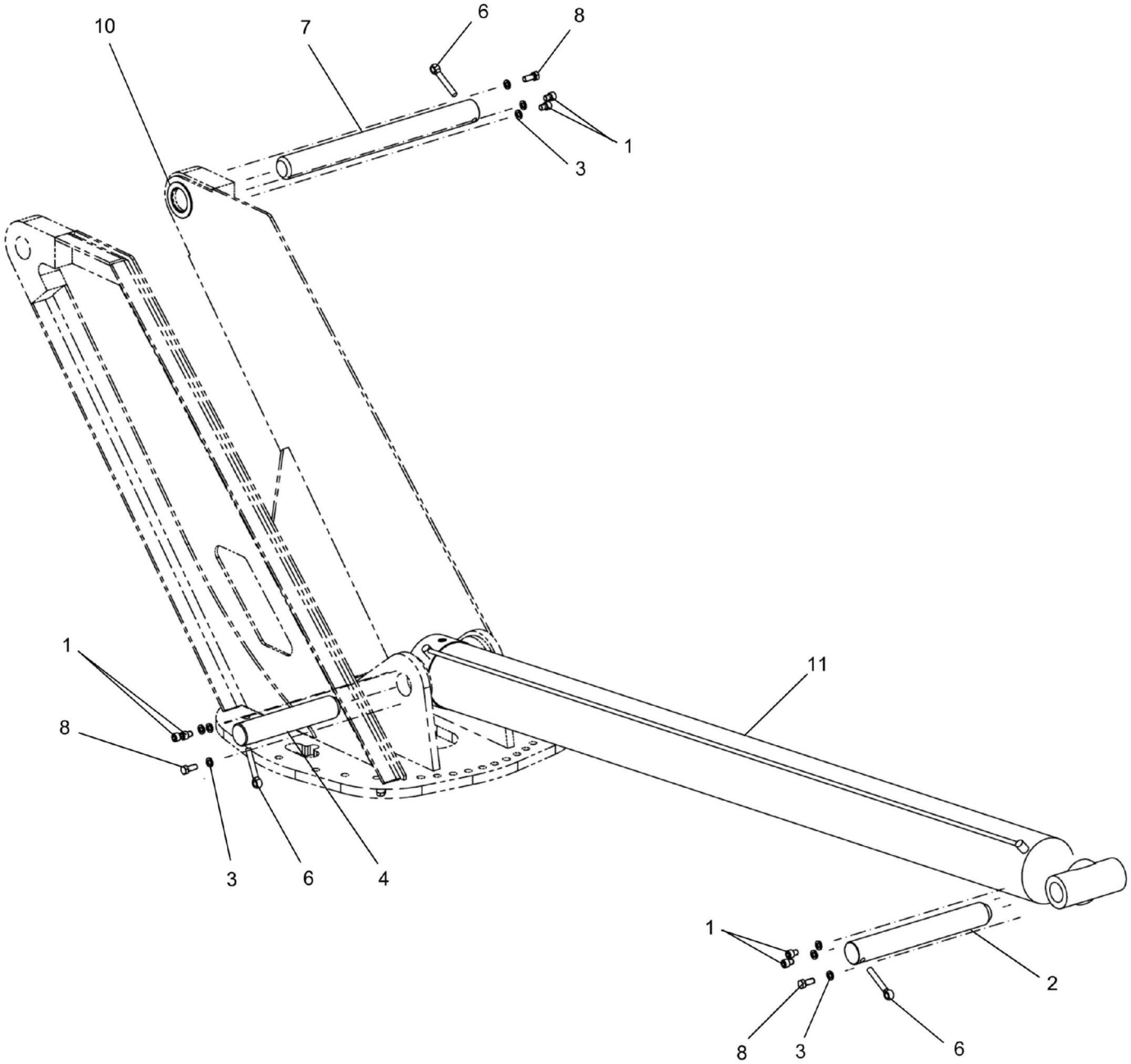

WHEN ORDERING PARTS, SPECIFY MODEL NUMBER, SERIAL NUMBER AND DESCRIPTION OF PARTS REQUIRED

LOAD KING BY CUSTOM TRUCK 1 SOURCE	**BOOM INSTALLATION ASSEMBLY**	DATE: Revised 08-2011	**CHAPTER**
		MODEL: 28-106	**1**
		PAGE: 19	

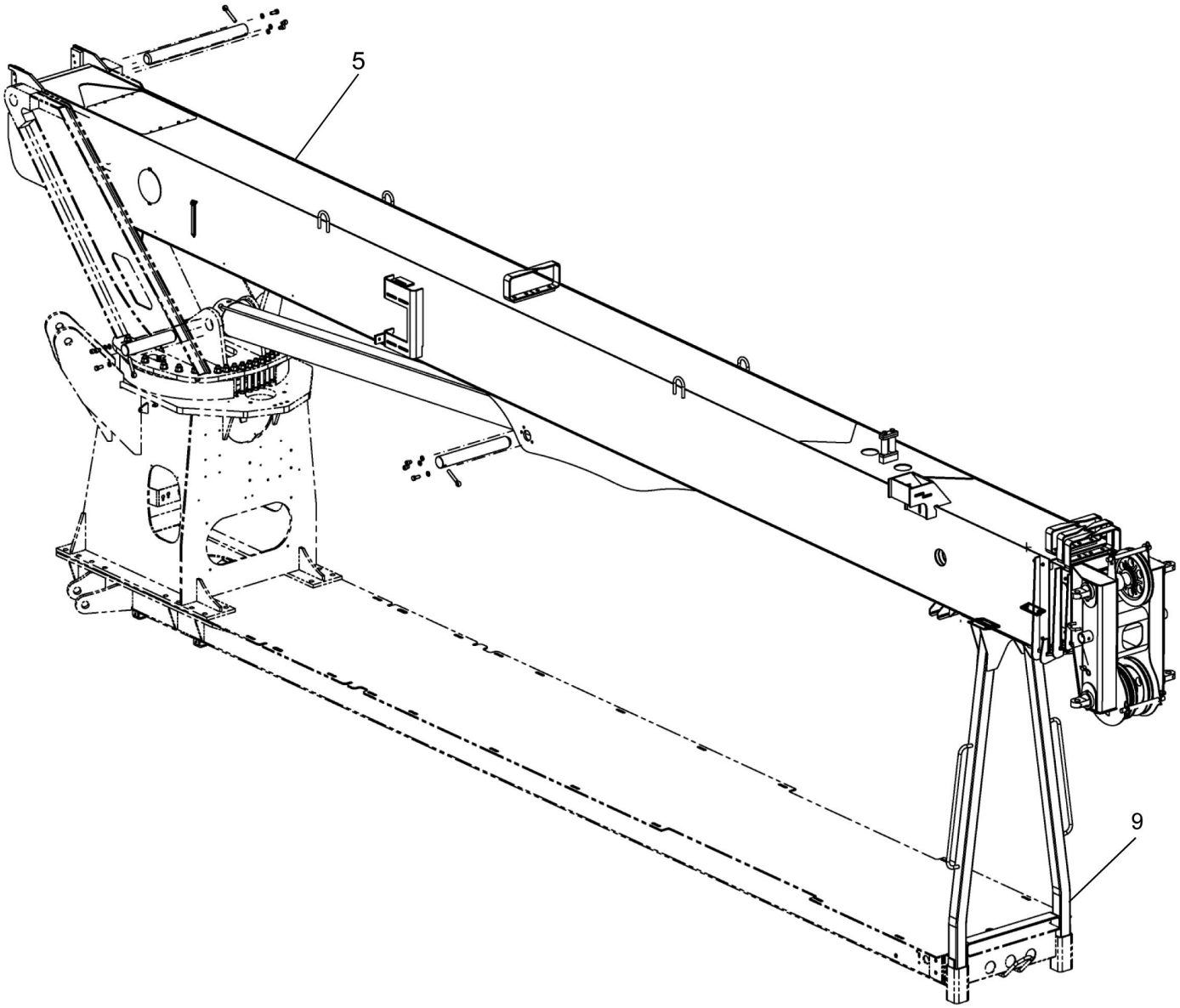

WHEN ORDERING PARTS, SPECIFY MODEL NUMBER, SERIAL NUMBER AND DESCRIPTION OF PARTS REQUIRED

REF	PART NO.	DESCRIPTION	QTY
	T117747 (Rev. A)	*Boom Installation Assembly*	
1	S14-625C750-H2	SCR, SHCS 0.625-11 X 0.75, ST Z	6
2	T105087	Pin 2.75 X 20.50	1
3	W07-625X000-20	WSH, LCK, MED SPLT 0.625, ST SQC	9
4	870-80008	Pin 2.75 X 14.50	1
5	**T117748**	Boom Assembly, 106 FT (see page 22)	1
6	224-26005	Rod End 0.625 X4.25	3
7	T105086	Pin 2.75 X29.00	1
8	SHF-625CA50-25	SCR, HHCS FT 0.625-11X1.50,STZ G5	3
9	**698-00065**	Boom Rest ASSY (see page 42)	1
10	1209-99	Spacer, 3.050X4.375X0.030, NYL	6
11	**T117684**	Cylinder, HYD, Boom Hoist (see page 43)	1

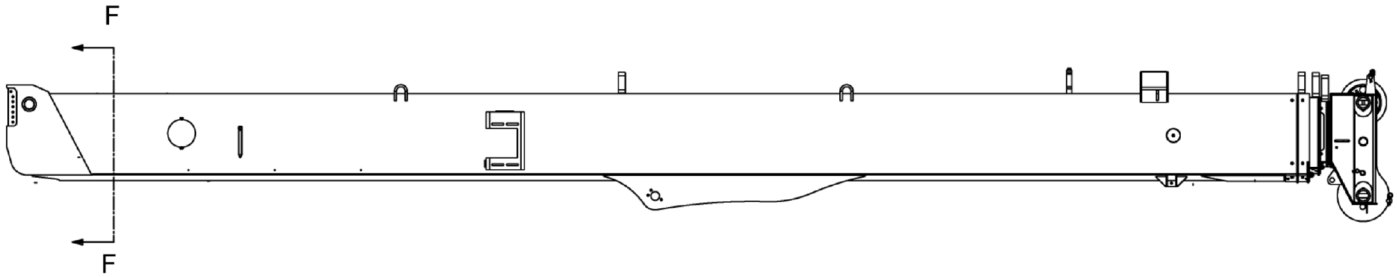

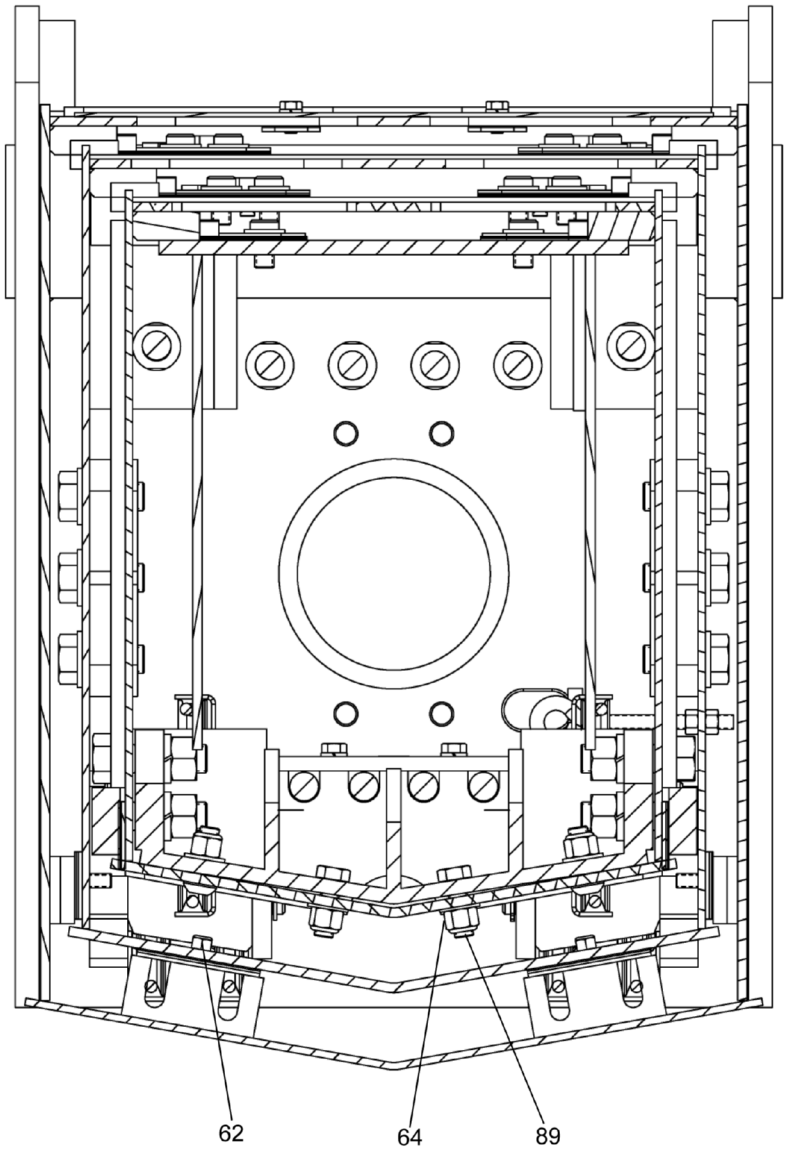

SECTION F -F

WHEN ORDERING PARTS, SPECIFY MODEL NUMBER, SERIAL NUMBER AND DESCRIPTION OF PARTS REQUIRED

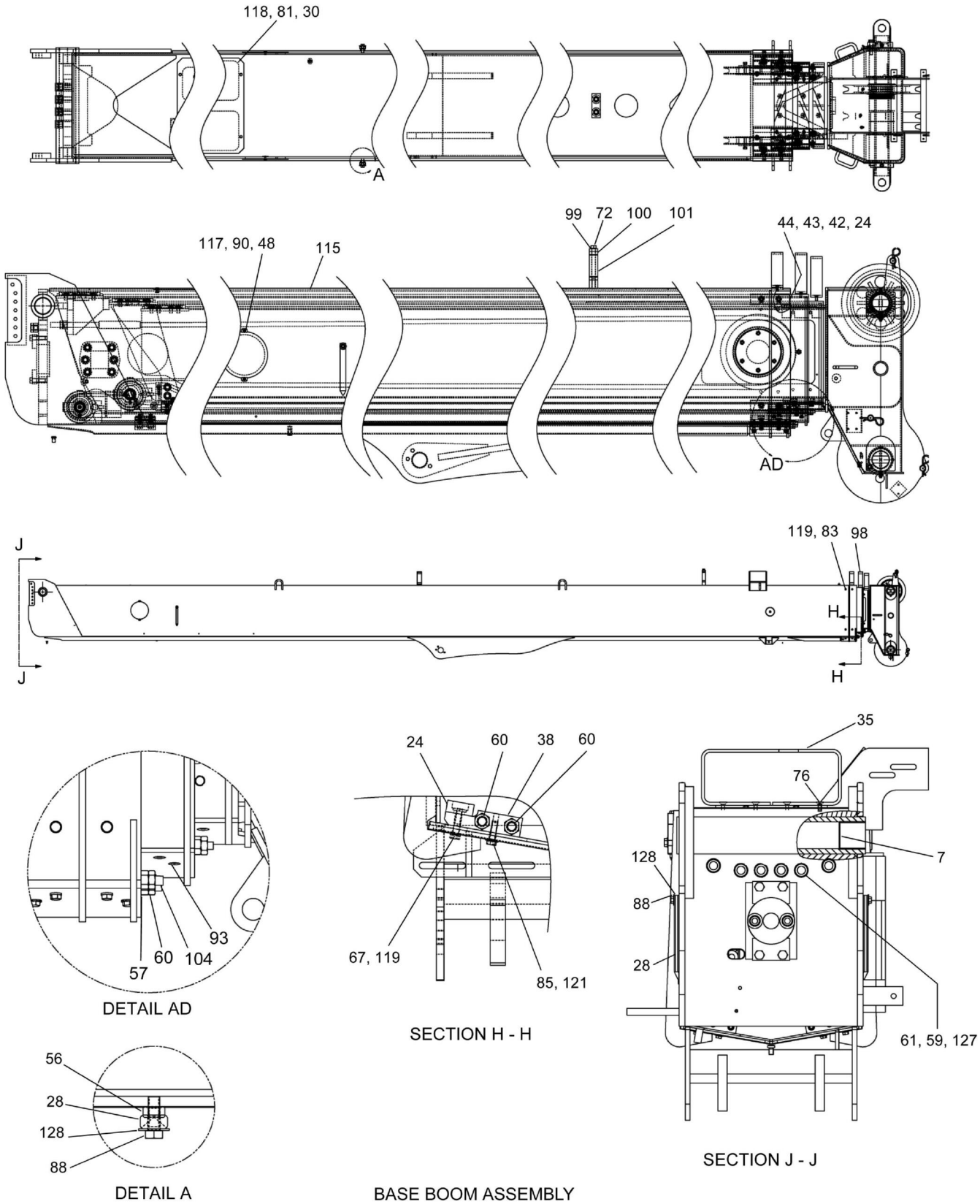

WHEN ORDERING PARTS, SPECIFY MODEL NUMBER, SERIAL NUMBER AND DESCRIPTION OF PARTS REQUIRED

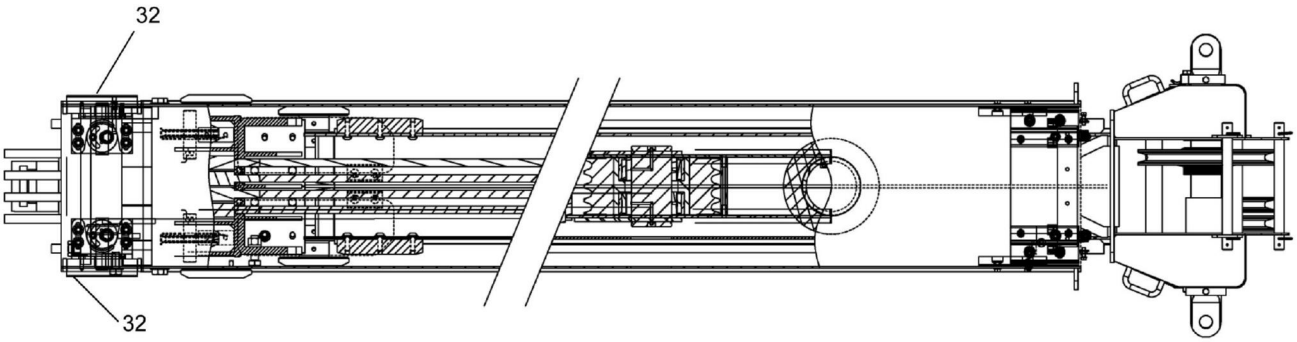

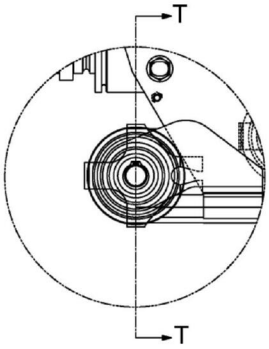

DETAIL S

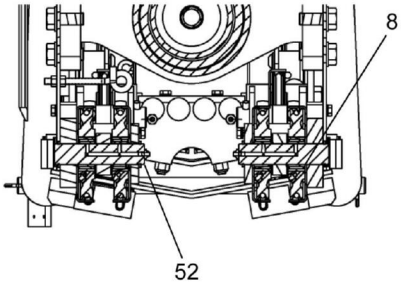

SECTION T - T

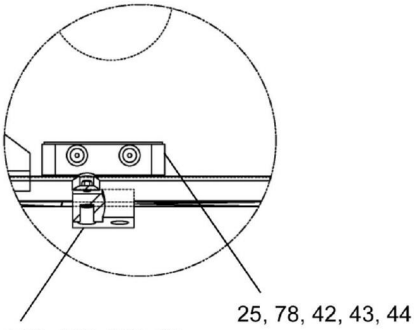

DETAIL Z

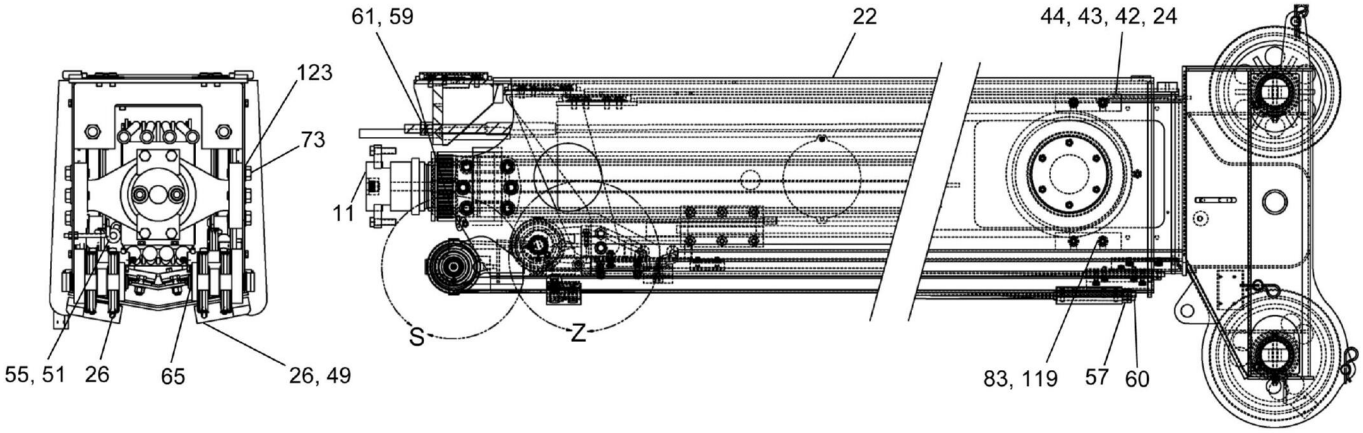

2ND STAGE ASSEMBLY

WHEN ORDERING PARTS, SPECIFY MODEL NUMBER, SERIAL NUMBER AND DESCRIPTION OF PARTS REQUIRED

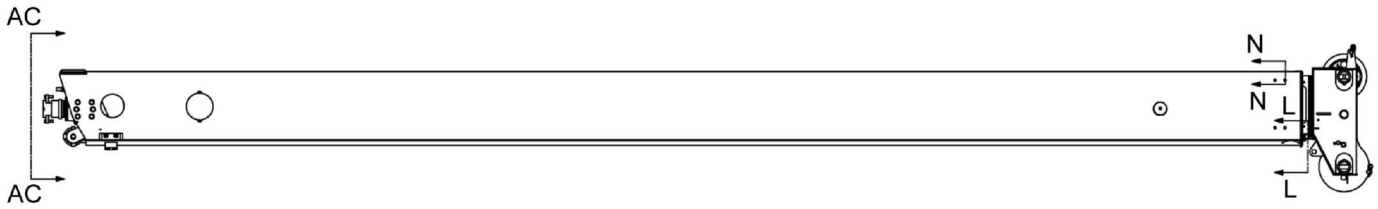

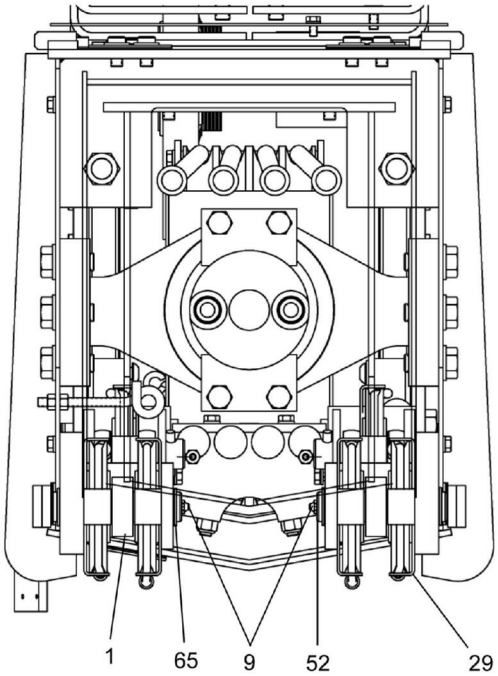

SECTION AC- AC

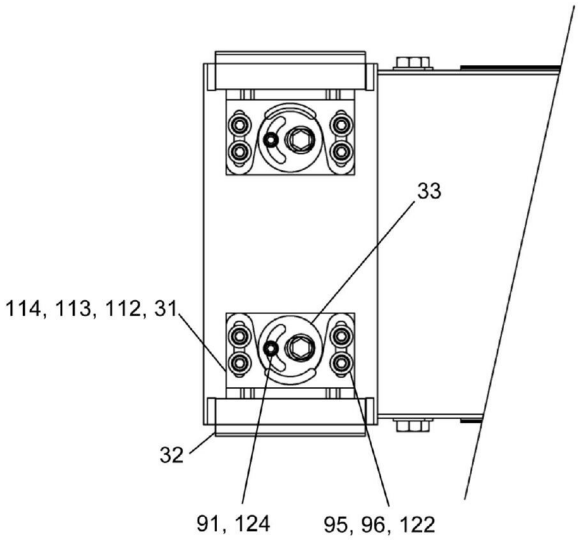

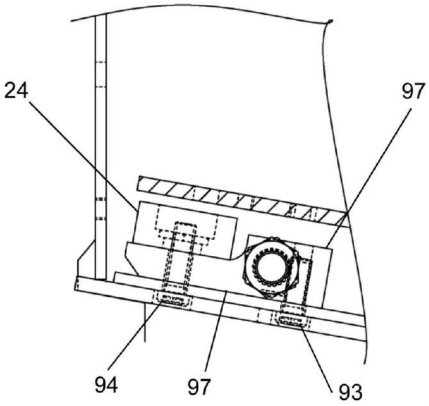

SECTION L - L

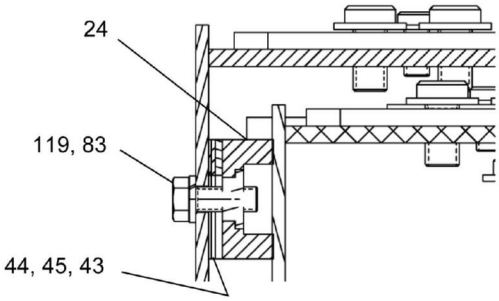

SECTION N - N

2ND STAGE ASSEMBLY

WHEN ORDERING PARTS, SPECIFY MODEL NUMBER, SERIAL NUMBER AND DESCRIPTION OF PARTS REQUIRED

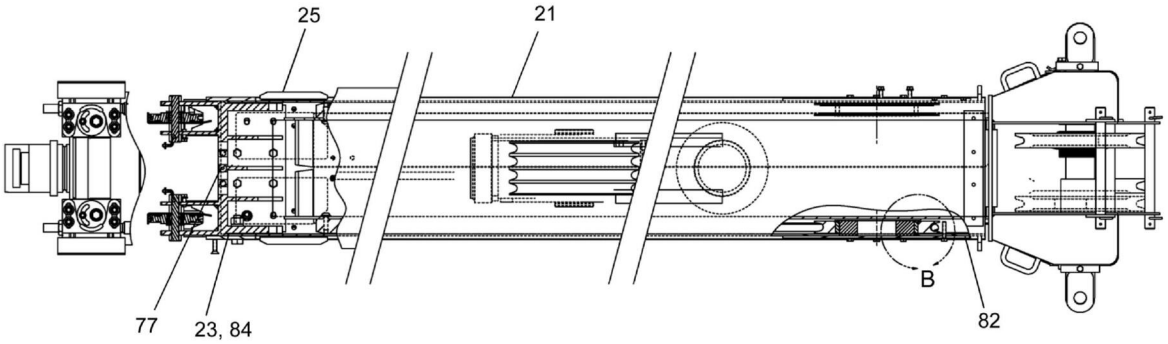

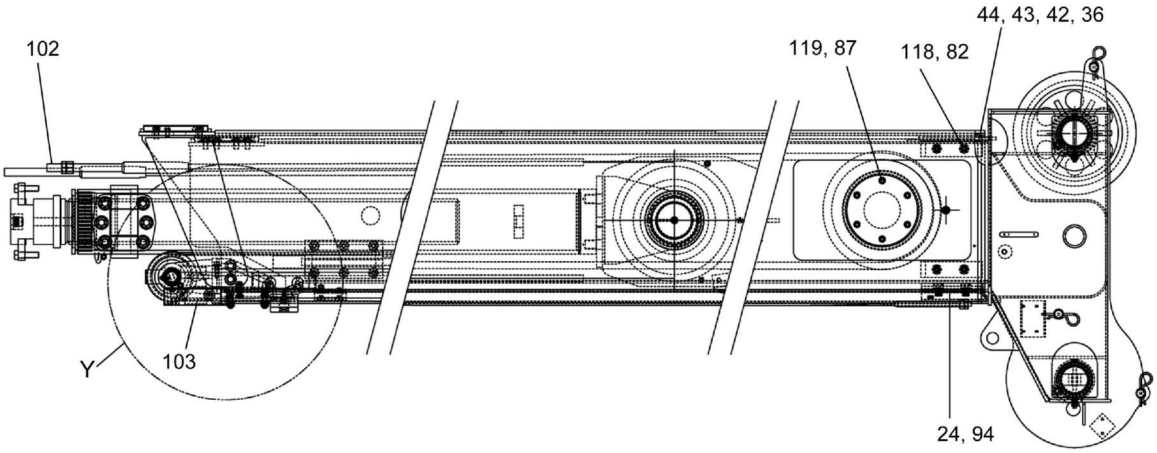

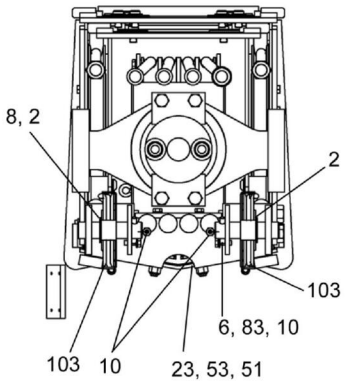

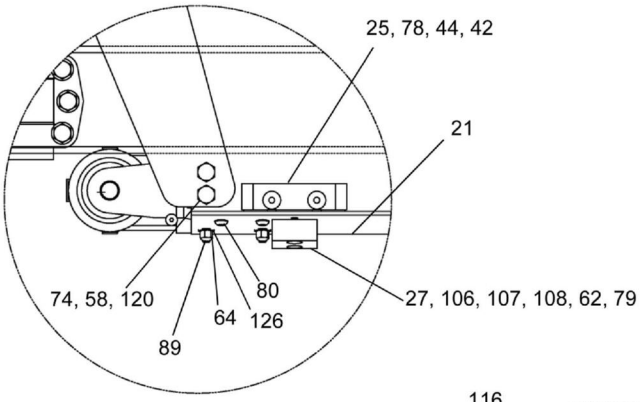

DETAIL Y

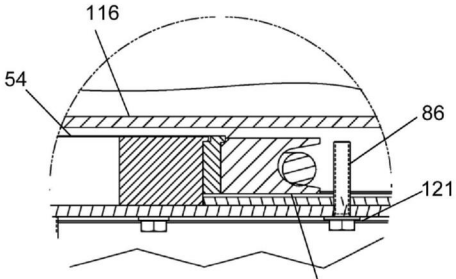

3RD STAGE ASSEMBLY

DETAIL B

WHEN ORDERING PARTS, SPECIFY MODEL NUMBER, SERIAL NUMBER AND DESCRIPTION OF PARTS REQUIRED

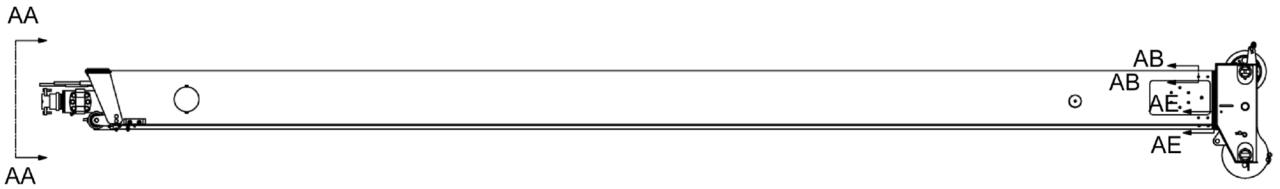

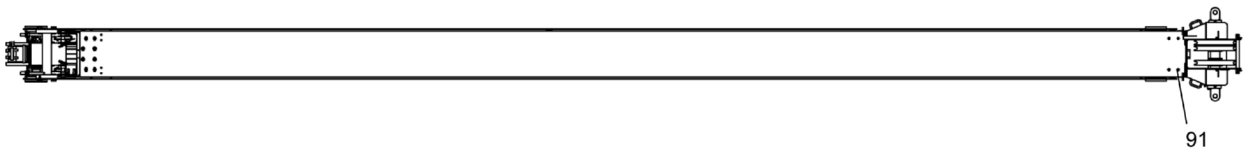

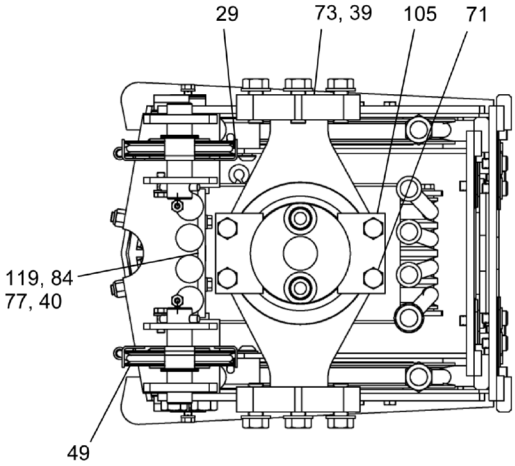

SECTION AA - AA

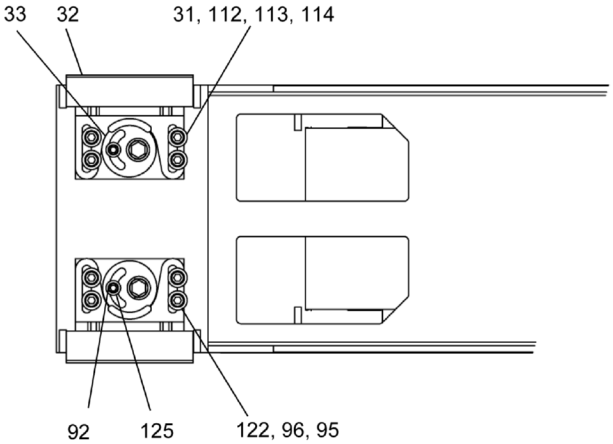

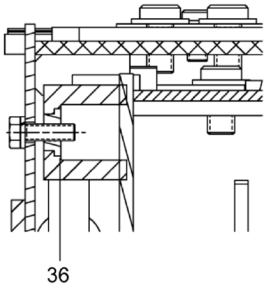

SECTION AB - AB

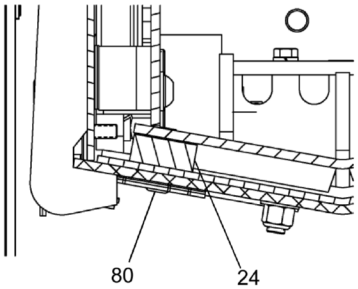

SECTION AE - AE

3RD STAGE ASSEMBLY

WHEN ORDERING PARTS, SPECIFY MODEL NUMBER, SERIAL NUMBER AND DESCRIPTION OF PARTS REQUIRED

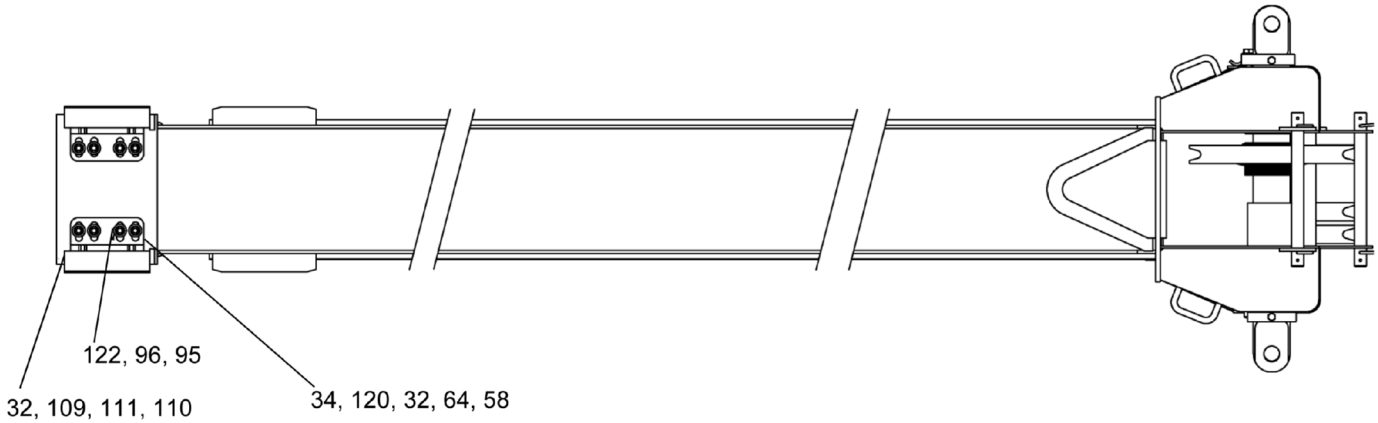

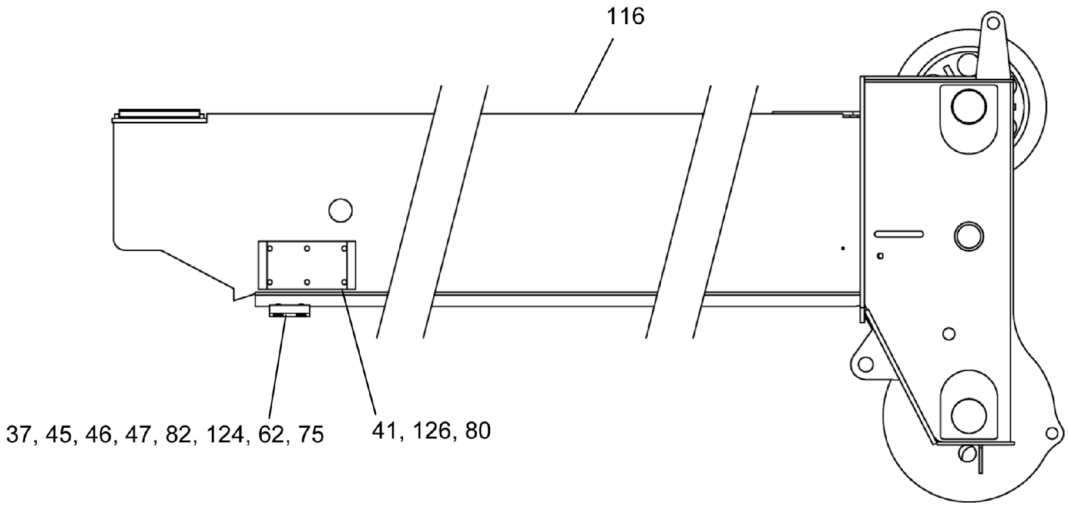

4TH STAGE ASSEMBLY

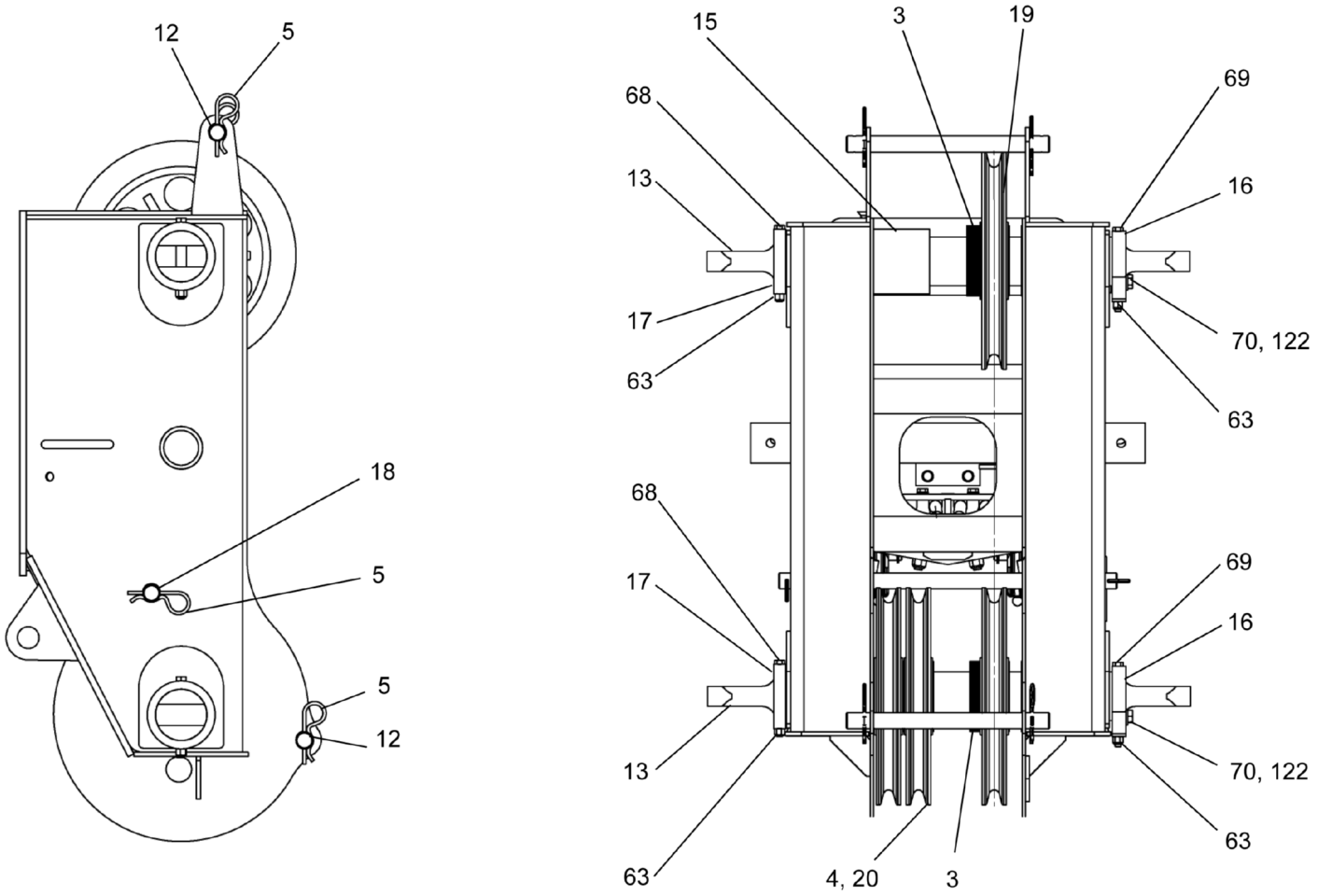

BOOM TIP ASSEMBLY

REF	PART NO.	DESCRIPTION	QTY
	T117748 (Rev. B)	*Boom Assembly, 106 FT*	
1	031-40229	Spacer, CYL 2.5X0.875	2
2	1208-28	Shim, Round 1.25X1.875X0.048, ST Z	6
3	1209-99	Spacer, 3.050X4.375X0.030, NYL	30
4	1213-3	Grease FTG, Zerk 0.125NPT 45°	3
5	1222-239	Pin, Hair Cotter	6
6	224-23008	Rod End 0.375X2.00	2
7	271-18002	Bearing 2.75 SHFT X 2.75, Teflon	2
8	274-20004	Bearing, Inner Race, 1.25 Shaft	6
9	501-03001	Lube Fitting 1/4-28 UNF	2
10	501-03007	Fitting, Lube 90°	2
11	**548-00060**	Cylinder ASSY, Sheave Attach (see page 33)	1
12	709-7106	Pin	2
13	709-7193	Pin	2
14*	709-7289	Spacer	8
15	709-7291	Spacer	1
16	709-7292	Collar, Shaft 3.00	2
17	709-7299	Collar, Shaft 3.00	2
18	709-7512	Pin	1
19	709A7232	Sheave Assembly 13.50	1
20	**714A1659**	Nylon Sheave ASSY (see page 38)	3
21	722-01379	Weldment, Boom 3RD Stage	1
22	722-01380	Weldment, 2ND Stage Boom	1
23	725-00159	Machining, Cable Anchor EXT/RET	1
24	729-02235	Wear Pad, 6.75 X 1.75 X 0.75	14
25	729-02236	Wear Pad Side Boom	4
26	729-02310	Cable Guide (Retract 2ND)	2
27	729-02311	Cable Guide (Retract 3RD)	2
28	729-02578	Pointer	2
29	729-02659	Plate, Cable Retainer	6
30	729-02798	Plate, Base Boom Cover	1
31	729-02829	Retainer Weldment, Wear Pad	4
32	729-02836	Wear Pad 7.00 X 1.75 X 0.75	6
33	729-02842	Eccentric Weldment	4
34	729-02864	Retainer Weldment, Top Wear Pad	2
35	729-02919	Guide, Winch Cable	4
36	729-02921	ASSY, Pad, Wear, 3RD SEC	4
37	729-02923	Wear Pad 3.50X1.50X0.50	2
38	780-00279	Block, Support Retract Cable	2
39	781-00188	SPRT Boss - EXT CYL Trunnion	2
40	783-03551	Bar, Retaining Anchor 3RD Stage	1
41	783-03727	Cable Anchor 4th Stage	2
42	787-00238	Shim 6.75X1.75X0.40, AL6061	18
43	787-00239	Shim 6.75X1.75X0.0625, AL6061	14
44	787-00240	Shim 6.75X1.75X0.10, AL6061	16
45	787-00241	Shim 3.50X1.50X0.040, AL6061	2
46	787-00242	Shim 3.50X1.50X0.0625, AL6061	2
47	787-00243	Shim 3.50X1.50X0.10, AL6061	2
48	802-01572	Cover, Base Boom Addess Hole	2
49	**860-10009**	Sheave Assembly, Boom Retract (see page 39)	6

* ITEM NOT SHOWN IN ILLUSTRATION

WHEN ORDERING PARTS, SPECIFY MODEL NUMBER, SERIAL NUMBER AND DESCRIPTION OF PARTS REQUIRED

REF	PART NO.	DESCRIPTION	QTY
	T117748 (Rev. B)	*Boom Assembly, 106 FT*	
50*	**860-60019**	Sheave ASSY (see page 40)	2
51	865-00028	Cable Guide, 1.00 DIA	1
52	870-30208	Pin, 1 1/4 DIA (Sheave)	2
53	870-30210	Pin Retract Sheave (3RD)	2
54	870-90044	Pin, Extension Sheave	2
55	N04-375C000-25	Nut, HEX 0.375-16, ST Z GR5	2
56	N04-438C000-2A	Nut, HEX 0.4375-14, ST Z GRA	2
57	N04-625C000-25	Nut, HEX 0.625-11, ST SQC G5	6
58	N04-750C000-Y8	Nut, HEX 0.75-10, ST YZ GR8	4
59	N04-875F000-25	Nut, HEX 0.875-14, ST Z GR5	6
60	N05-625C000-25	Nut, HEX JAM 0.625 -11, ST Z GR5	6
61	N05-875F000-25	Nut, HEX JAM 0.875-14, ST Z GR5	6
62	NYL-312C000-25	Nut, HEX NYL-INS 0.312-18, ST Z G5	12
63	NYL-375C000-25	Nut, HEX NYL-INS 0.375-16, ST Z G5	4
64	NYL-500C000-25	Nut, HEX NYL - INS 0.50-13, ST Z G5	8
65	REX-A25X093-BP	Ring, EXTSNP HVY 1.25 X 0.093, ST BP	4
66	S01-312CA25-25	HHCS, 5/16-18 NC X 1.25 GR5 Zinc	4
67	S01-375CA75-25	SCR, HHCS 0.375-16X1.75, ST Z GR5	4
68	S01-375CD50-25	SCR, HHCS 0.375-16 X 4.50, ST SQC G5	2
69	S01-375CE00-Y8	SCR, HHCS 0.375-16X5.00, ST YZ G8	2
70	S01-500CB25-Y8	SCR, HHCS 0.50-13X2.25, ST SQC G8	2
71	S01-625CB25-25	SCR, HHCS 0.625-11X2.25, ST Z GR5	4
72	S01-625CG00-Y8	SCR, HHCS 0.625-11X7.00, ST YZ G8	2
73	S01-750CA75-Y8	SCR, HHCS 0.75-10 X 1.75, ST Z G8	12
74	S01-750CB50-Y8	SCR, HHCS 0.75-10X2.50, ST YZ GR8	4
75	S16-312CA25-20	SCR, FHSHCS 0.312-18X1.25, ST Z	4
76	S16-375C750-20	SCR, FHSHCS 0.375-16X0.75, ST Z	16
77	S16-375CA00-20	SCR, FHSHCS 0.375-16X1.00, ST Z	1
78	S16-375CA25-20	SCR, FHSHCS 0.375-16 X 1.25, ST SQC	8
79	S18-312CA50-HC	SCR, BHSHCS 0.312-18X1.50, STL Z	4
80	S18-500CA50-HC	SCR, BHSHCS 0.50-13X1.50, STL Z	16
81	SHF-312C625-25	SCR, HHCS 0.312-18X0.625, STZ G5	4
82	SHF-312CA00-25	SCR, HHCS FT 0.312-18X1.00, ST Z G5	8
83	SHF-375CA00-25	SCR, HHCS FT 0.375-16 X 1.00, ST Z G5	18
84	SHF-375CA00-Y8	SCR, HHCS FT 0.375-16X1.00, STY G8	2
85	SHF-375CA25-Y8	SCR, HHCS FT 0.375-16X1.25, STY Z G8	4
86	SHF-375CA75-25	SCR, HHCS FT 0.375-16X1.75, STZ G5	2
87	SHF-375CA75-Y8	SCR, HHCS FT 0.375-16X1.75, STY Z G8	12
88	SHF-438CA25-25	SCR, HHCS FT 0.438-14X1.25, STZ G5	2
89	SHF-500CA50-25	SCR, HHCS FT 0.50-13 X 1.50, ST SQC G5	4
90	SL5-250C500-20	SCR, CR RND MS 0.25-20X0.50, ST Z	4
91	SLH-375C500-BX	SCR, LHSHCS 0.375-16X0.50, ST BOX	4
92	SLH-375C750-BX	SCR, LHSHCS 0.375-16X0.75, ST BOX	4
93	SLH-375CA00-BX	SCR, LHSHCS 0.375-16X1.00, ST BOX	4
94	SLH-375CA25-BX	SCR, LHSHCS 0.375-16X1.25, ST BOX	4
95	SLH-500C750-BX	SCR, LHSHCS 0.50-13X0.75, ST BKOX	24
96	SLH-500CA00-BX	SCR, LHSHCS 0.50-13X1.00, ST BKOX	24
97	T103511	Block, Support Retract Cable 4TH	2
98	T103531	Guide, Winch Cable	4

* ITEM NOT SHOWN IN ILLUSTRATION

WHEN ORDERING PARTS, SPECIFY MODEL NUMBER, SERIAL NUMBER AND DESCRIPTION OF PARTS REQUIRED

REF	PART NO.	DESCRIPTION	QTY
	T117748 (Rev. B)	*Boom Assembly, 106 FT*	
99	T103770	Plate, Cap	1
100	T103771	Pad, Wear	2
101	T103772	Roller, Cable	2
102	T104826	Wire Rope ASSY 3/4 DIA	2
103	T104833	Wire Rope ASSY 5/16 DIA	2
104	T104834	Wire Rope ASSY 5/16 DIA	4
105	T105263	Plate	2
106	T105268	Shim, Wear Pad (0.100)	4
107	T105269	Shim, Wear Pad (0.063)	4
108	T105270	Shim, Wear Pad (0.040)	4
109	T109577	Spacer 0.1 Thick	2
110	T109590	Spacer, 0.063	2
111	T109591	Spacer, 0.04 Thick	2
112	T109752	Spacer, 2ND and 3RD STG, TOP 0.1 THK	4
113	T109753	Spacer, 2ND and 3RD STG, TOP, 0.063 THK	4
114	T109754	Spacer, 2ND and 3RD STG, TOP, 0.04 THK	4
115	T117746	Weldment, Base Boom	1
116	T117813	Weldment, Boom 4TH Stage	1
117	W07-250X000-20	Washer, LCK, MED SPLT 0.25, ST SQC	4
118	W07-312X000-20	WSH, LCK, MED SPLT 0.3125, ST SQC	12
119	W07-375X000-20	WSH, LCK, MED SPLT 0.375, ST Z	37
120	W07-750X000-20	WSH, LCK, MED SPLT 0.75, ST Z	4
121	WAH-37NX000-Y2	WSH, FL HRD A-NRW 0.375, ST SQC	6
122	WAH-50NX000-Y2	WSH, FL HRD A-NRW 0.50, ST YZ	26
123	WAH-75NX000-Y2	WSH, FL HRD A-NRW 0.75, ST YZ	12
124	WAN-31NX000-20	WSH, FL TYPA-NRW 0.3125, ST SQC	10
125	WAN-37NX000-20	WSH, FL TYPA-NRW 0.375, ST Z	2
126	WAN-50NX000-20	WSH, FL TYPA-NRW 0.50, ST Z	20
127	WAN-87NX000-20	WSH, FL TYPB-NRW 0.875, ST Z	4
128	WBR-43RXA12-20	WSH, FL TYPB-REG 0.4375, ST Z	2
129*	**T115861**	OPT Sheave & Spacer 7 Part (see page 41)	1

* ITEM NOT SHOWN IN ILLUSTRATION

WHEN ORDERING PARTS, SPECIFY MODEL NUMBER, SERIAL NUMBER AND DESCRIPTION OF PARTS REQUIRED

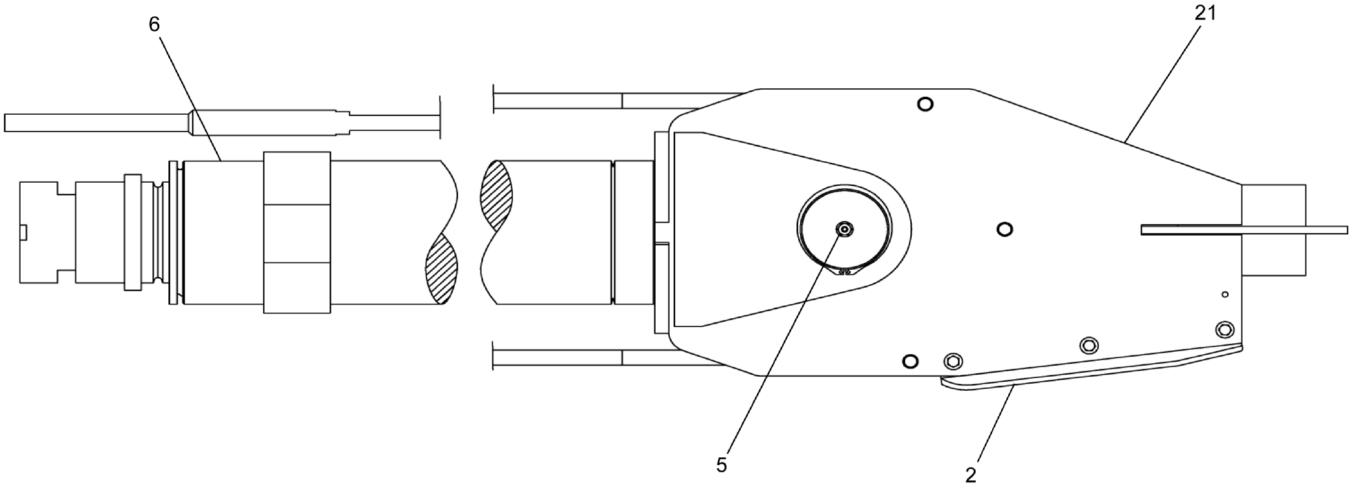

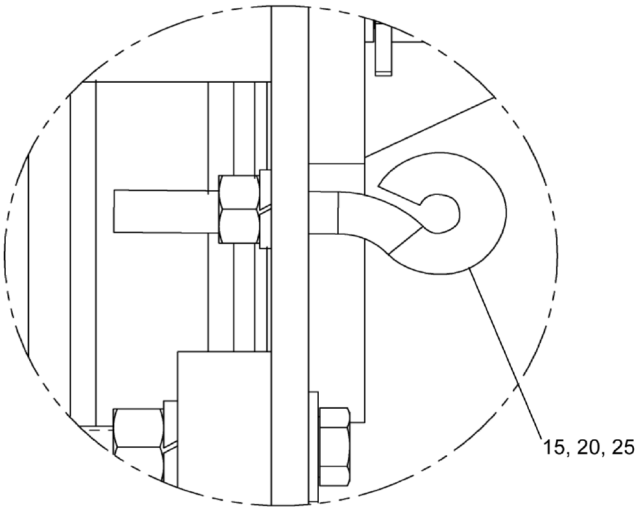

DETAIL D

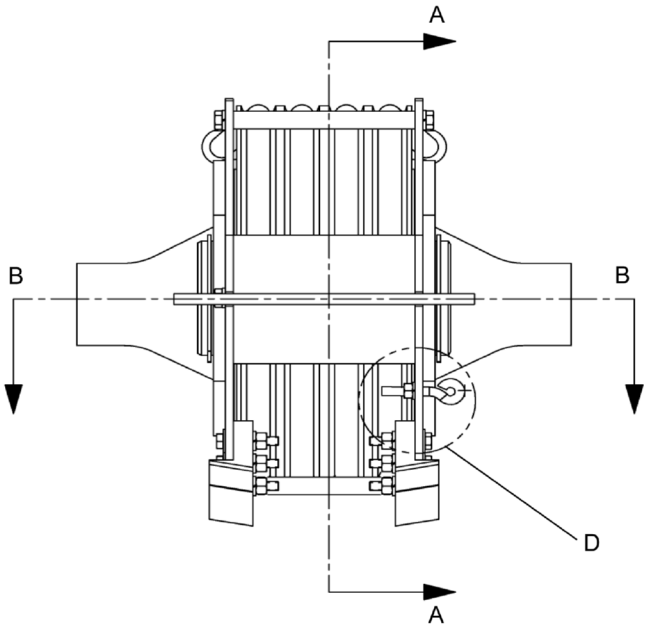

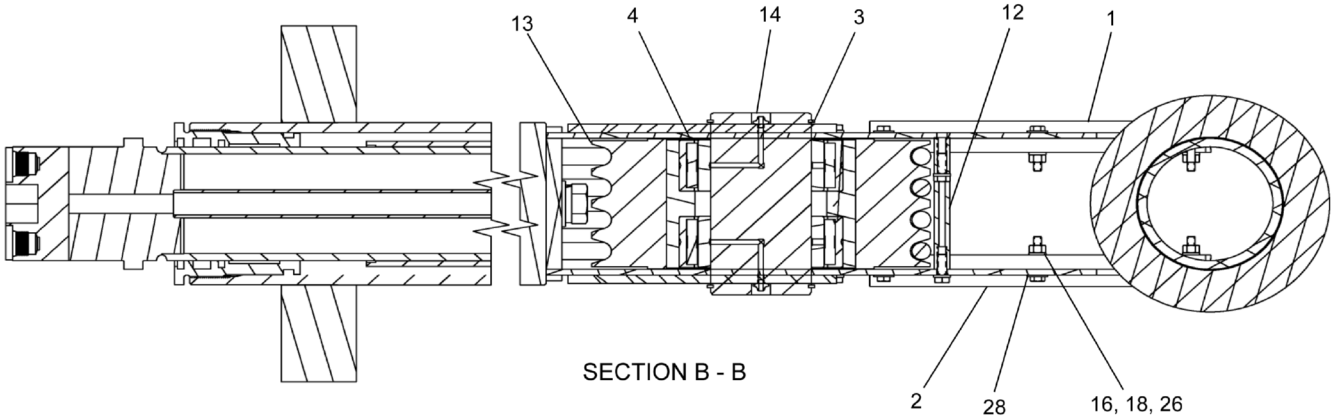

SECTION B - B

WHEN ORDERING PARTS, SPECIFY MODEL NUMBER, SERIAL NUMBER AND DESCRIPTION OF PARTS REQUIRED

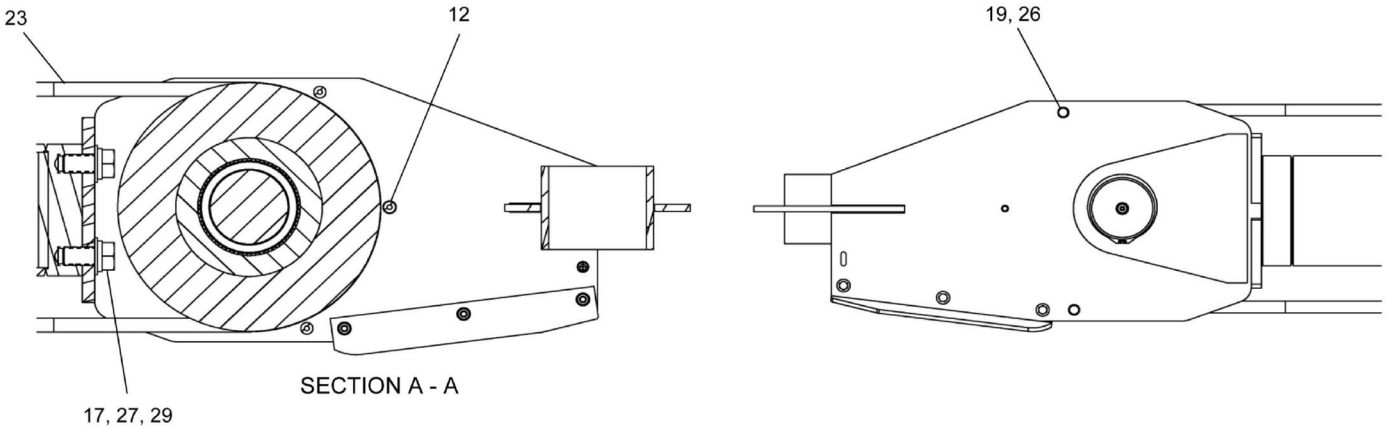
23
12
19, 26
SECTION A - A
17, 27, 29

REF	PART NO.	DESCRIPTION	QTY
	548-00060 (Rev. D)	*Cylinder ASSY, Sheave Attach*	
1	100-30041	Wear Pad, EXT CYL, Cast Iron-RH	1
2	100-30042	Wear Pad, EXT CYL, Cast Iron-LH	1
3	200-50008	Ring, EXTSNP 4.00X0.109, ST BPH	2
4	274-80001	Bearing, Inner Race, 4.00 Shaft	2
5	501-03001	Lube Fitting 1/4-28 UNF	2
6	**540-90105**	Cylinder, HYD Boom Extend (see page 36)	1
7*	709-01940	Head, Boom	1
8*	709-01941	Plate	1
9*	709-7190	Plate 8.50 X 8.00 X 0.31	1
10*	723-01556	Sub-Weldment, 4th Stage Boom	1
11*	729-02922	Top Wear Pad Anchor Plate	1
12	782-01703	Spacer - Boom EXT SHV BRKT	3
13	860-60015	Sheave ASSY, 4 X 0.75 DIA Rope	1
14	870-80012	Pin, Sheave 4.00 X 8.00	1
15	N04-312C000-25	Nut, HEX 0.3125-18, ST SQC G5	1
16	N04-375C000-25	Nut, HEX 0.375-16, ST Z GR5	6
17	S01-A00CB00-25	SCR, HHCS 1.00-8X2.00, ST Z GR5	2
18	SHF-312CA75-25	SCR, HHCS FT 0.312-18X1.75, STZ G5	6
19	SHF-375CA00-25	SCR, HHCS FT 0.375-16 X 1.00, ST Z G5	6
20	STE-312CA50-20	Screw, Turned Eye, 5/16 X 1.5 SH	1
21	T103681	Sheave Bracket Weld-EXT CYL	1
22*	T103709	Plate, Ramp 4th Stage	2
23	T104829	Wire Rope Assembly 3/4 DIA	4
24*	T106424	Block, Wear Pad Support	4
25	W07-312X000-20	WSH, LCK, MED SPLT 0.3125, ST SQC	1
26	W07-375X000-20	WSH, LCK, MED SPLT 0.375, ST Z	12
27	W07-A00X000-20	WSH, LCK, MED SPLT 1.00, ST Z	2
28	WAH-37NX000-Y2	WSH, FL HRD A-NRW 0.375, ST SQC	6
29	WAH-A0NX000-Y2	WSH, FL HRD A-NRW 1.00, ST YZ	2

* ITEM NOT SHOWN IN ILLUSTRATION

WHEN ORDERING PARTS, SPECIFY MODEL NUMBER, SERIAL NUMBER AND DESCRIPTION OF PARTS REQUIRED

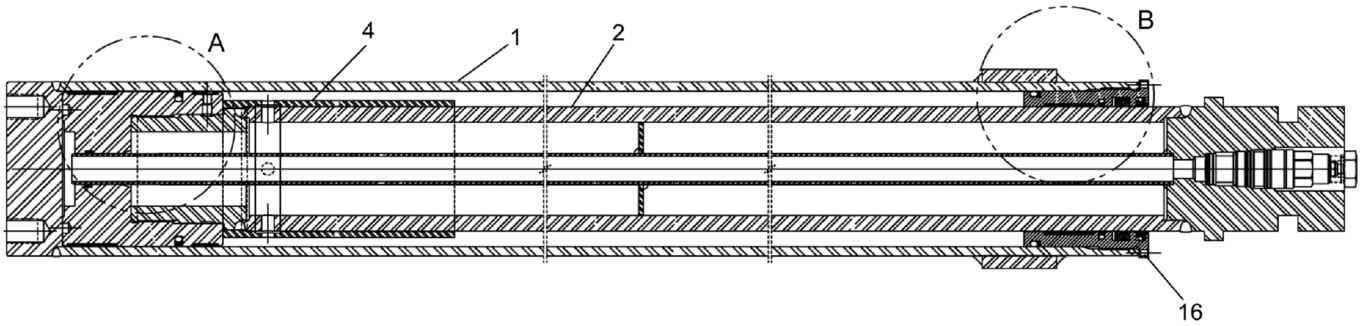

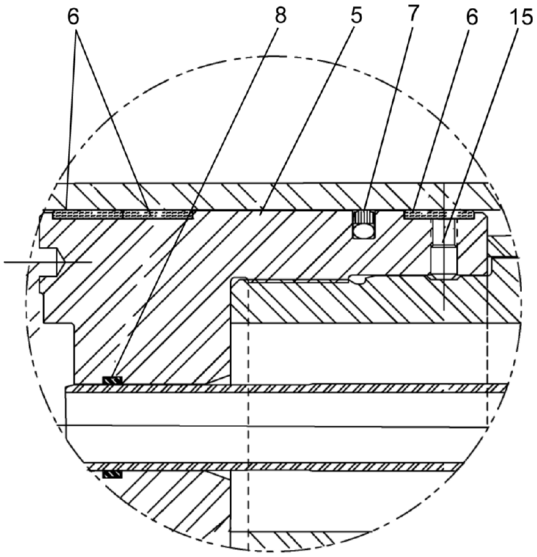

DETAIL A

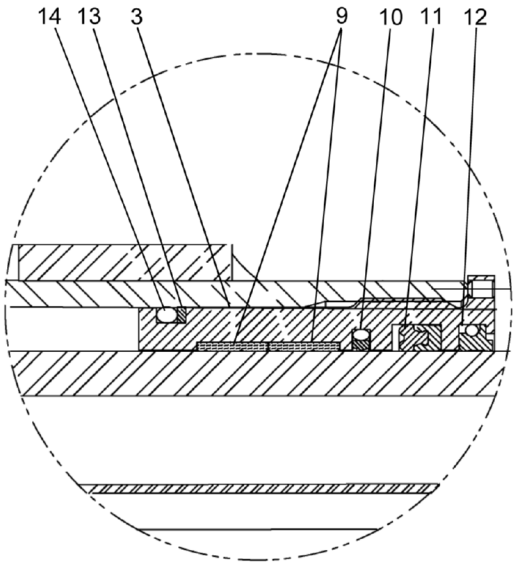

DETAIL B

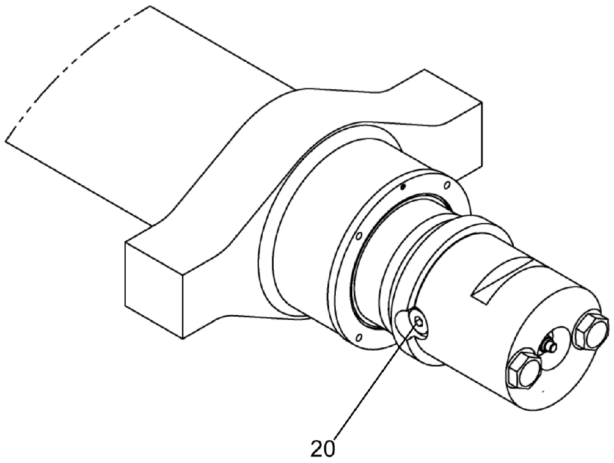

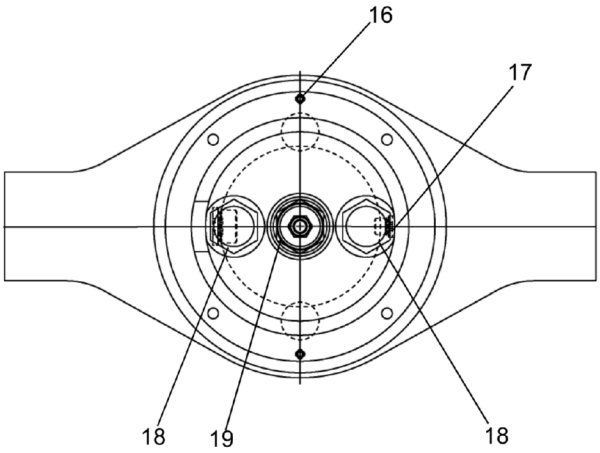

WHEN ORDERING PARTS, SPECIFY MODEL NUMBER, SERIAL NUMBER AND DESCRIPTION OF PARTS REQUIRED

LOAD KING BY CUSTOM TRUCK 1 SOURCE	**EXTENSION CYLINDER ASSEMBLY 106' BOOM**	DATE: Revised 03-2013	**CHAPTER**
		MODEL: 28-106	**1**
		PAGE: 36	

REF	PART NO.	DESCRIPTION	QTY
	540-90105 (Rev. A)	*Cylinder, HYD Boom Extend*	
	221081	Seal Kit 6.250, 5.000, 1.250	1
1	221066	Case Weld S 6.250, 318.250	1
2	221067	Rod Weld Tube S 5.000, 316.625	1
3	221068	Head S 6.250, 5.000, 5.000 DUC	1
4	221069	Spacer S 5.500, 4.900, 9.313	1
5	221070	Piston S 6.250, 1.250, 6.438	1
6	221071	Wring 6.250, 6.000, 1.000 BC	3
7	221072	Seal Piston 6.250 GLYD Ring T	1
8	221073	Cover Seal -218 ID Two Backups	1
9	221074	Wring 5.250, 5.000, 1.000 BC	2
10	221075	Seal Rod 5.000 Step Type K B/F R305000	1
11	221076	Ucup 5.000R 0.375CS 0.625 DZLTFL	1
12	221077	Wiper 5.000R 0.375CS DX	1
13	221078	Backup 435 6.250 1758	1
14	221079	Oring 435, 6.250OD 70N, 0.250CS	1
15	216726	SHSS 0.375-16, 0.500L W/Nylok	2
16	222472	SHSS 0.250-20, 0.375 Cup Nylok	2
17	217238	Plug SAE 4, 0.438-20 SH STL	1
18	216233	Plug SAE 12, 1.063-12 HH STL	2
19	221080	Valve CBAL CAGA-LHN 4000	1
20	221082	Plug SAE 10, 0.875-14 SH STL	1

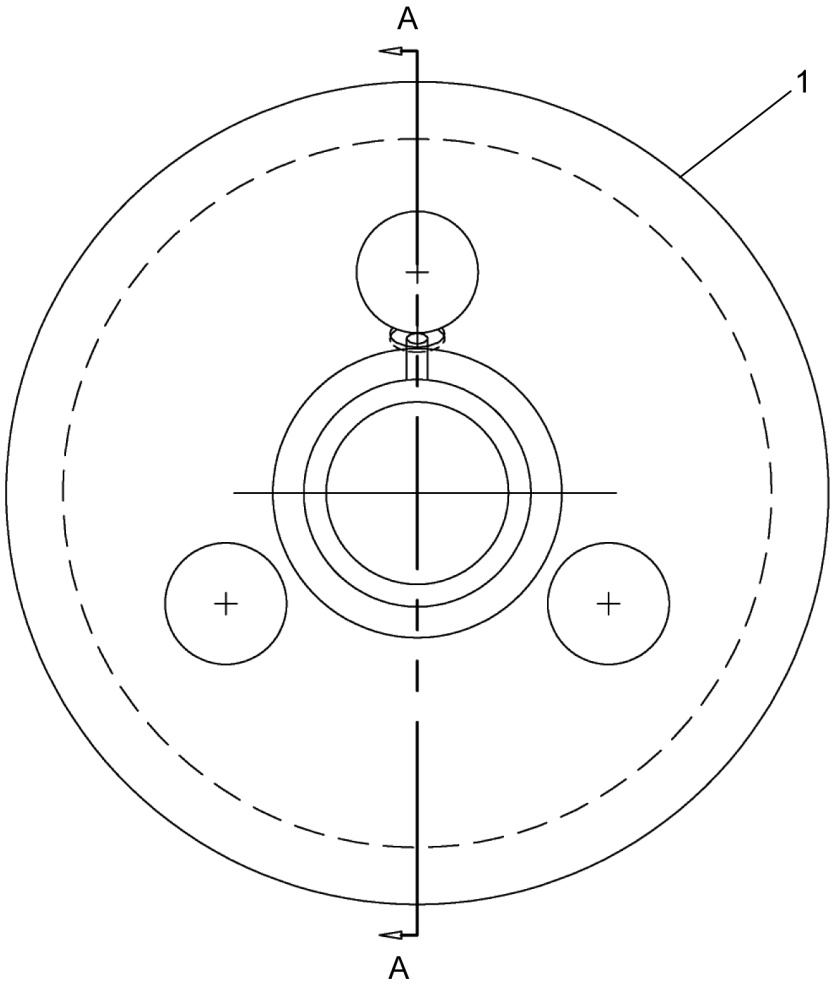

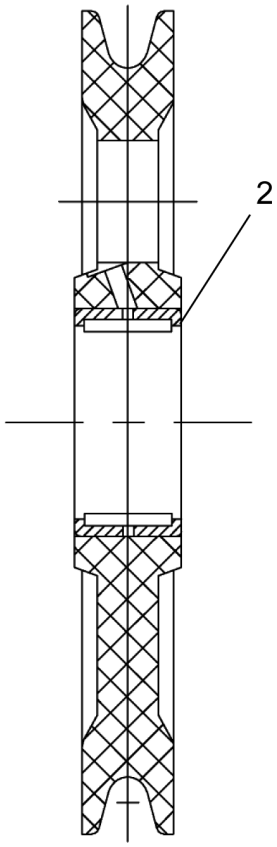

SECTION A-A

REF	PART NO.	DESCRIPTION	QTY
	714A1659 (Rev. 00)	*Nylon Sheave ASSY*	
1	714 0743	Sheave	1
2	1217-358	Bearing, MCGILL #MR-48	1

WHEN ORDERING PARTS, SPECIFY MODEL NUMBER, SERIAL NUMBER AND DESCRIPTION OF PARTS REQUIRED

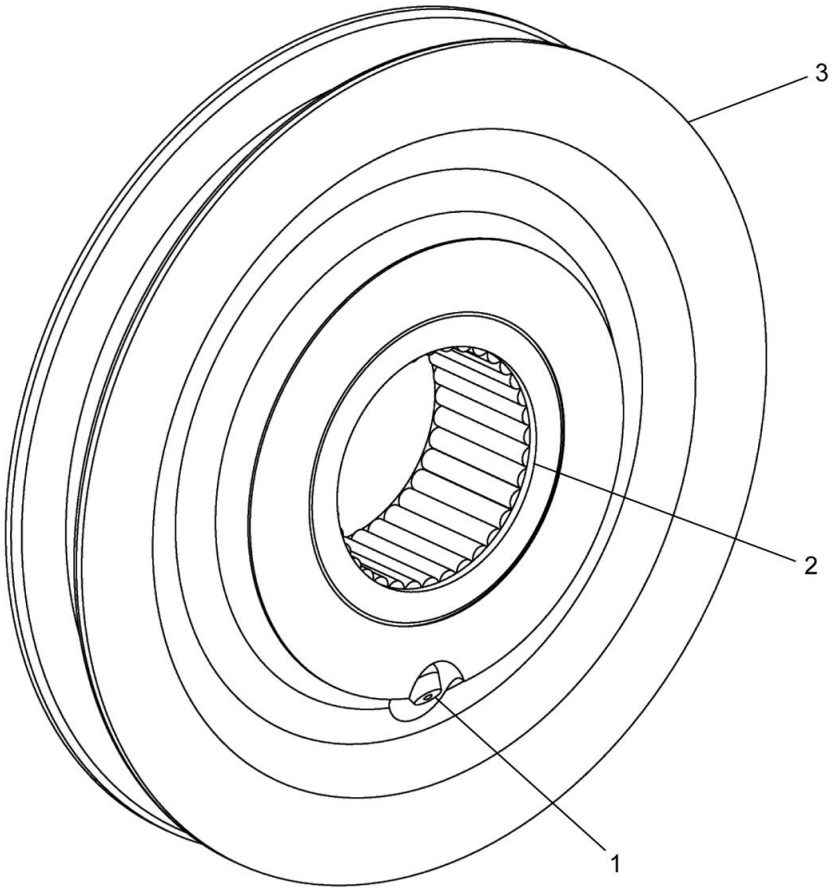

REF	PART NO.	DESCRIPTION	QTY
	860-10009 (Rev. C)	*Sheave Assembly, Boom Retract*	
1	1213-07	Grease FTG, ZERK, 0.25-28 STR	1
2	273-10007	Roller BRG Outer Race	1
3	860-10010	Sheave 5.50 OD X 7.50	1

WHEN ORDERING PARTS, SPECIFY MODEL NUMBER, SERIAL NUMBER AND DESCRIPTION OF PARTS REQUIRED

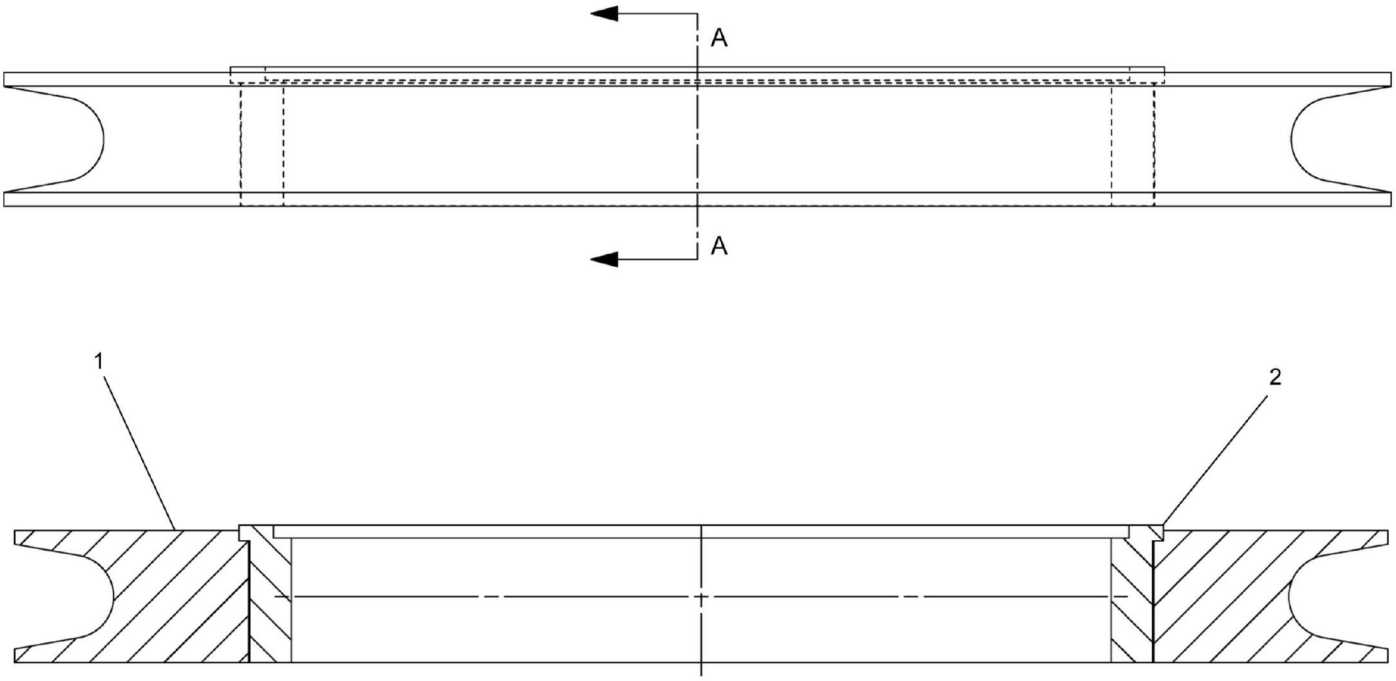

SECTION A - A

REF	PART NO.	DESCRIPTION	QTY
	860-60019 (Rev. A)	*Sheave ASSY*	
1	TW - 13 X 1.25 - 1	Sheave PA6G Black	1
2	TW - 13 X 1.25 - 2	Polygon Bushing	1

WHEN ORDERING PARTS, SPECIFY MODEL NUMBER, SERIAL NUMBER AND DESCRIPTION OF PARTS REQUIRED

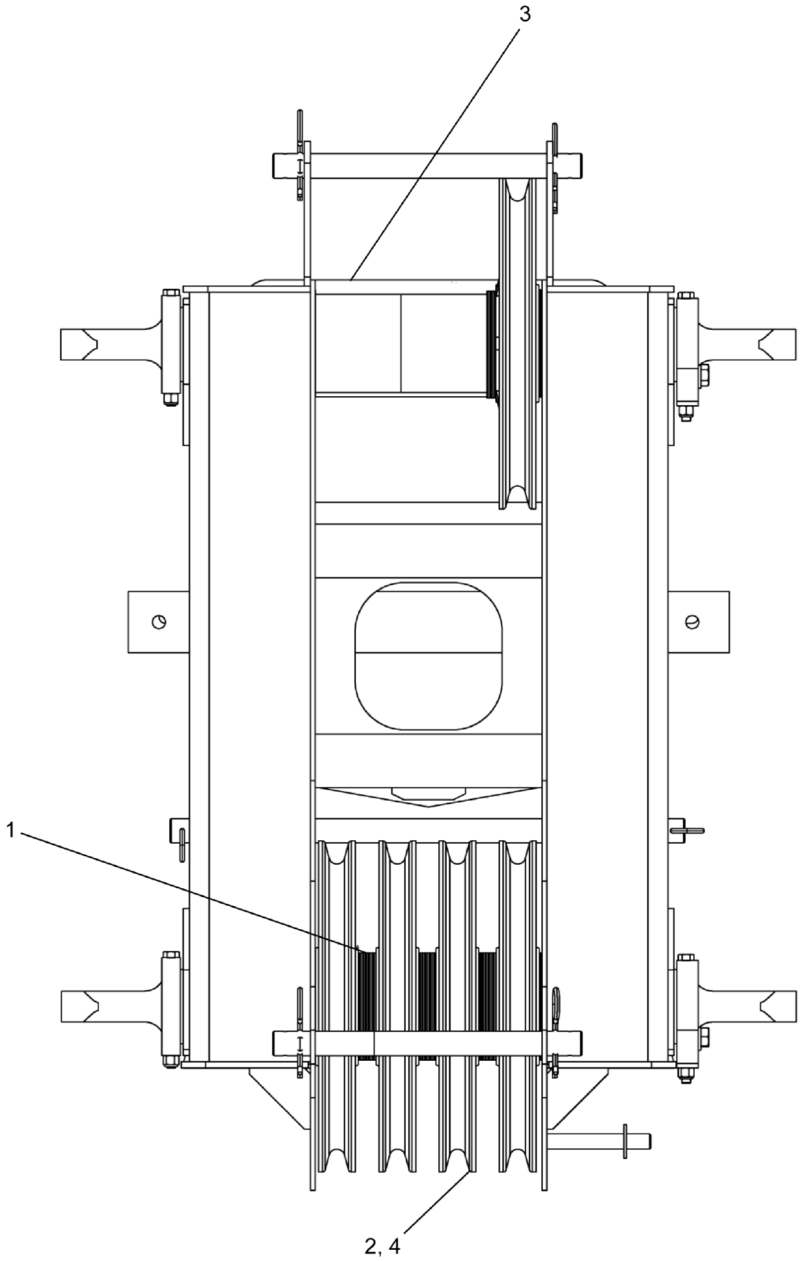

REF	PART NO.	DESCRIPTION	QTY
	T115861 (Rev. B)	*OPT Sheave & Spacer 7 Part*	
1	1209-99	Spacer, 3.050X4.375X0.030, NYL	26
2	1213-3	Grease FTG, Zerk 0.125NPT 45°	1
3	709-7291	Spacer	1
4	**714A1659**	Nylon Sheave ASSY (see page 38)	1

WHEN ORDERING PARTS, SPECIFY MODEL NUMBER, SERIAL NUMBER AND DESCRIPTION OF PARTS REQUIRED

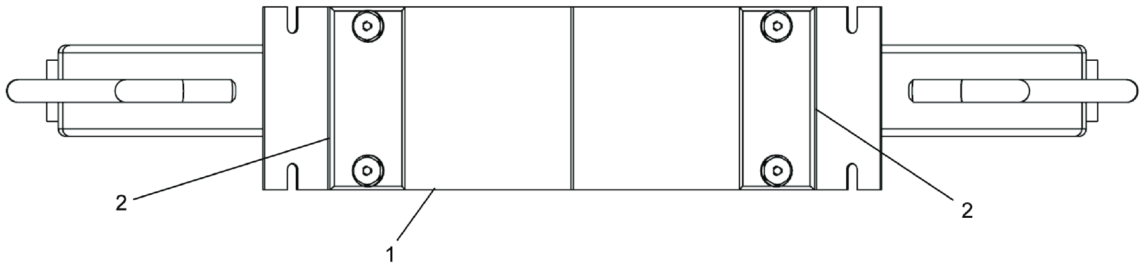

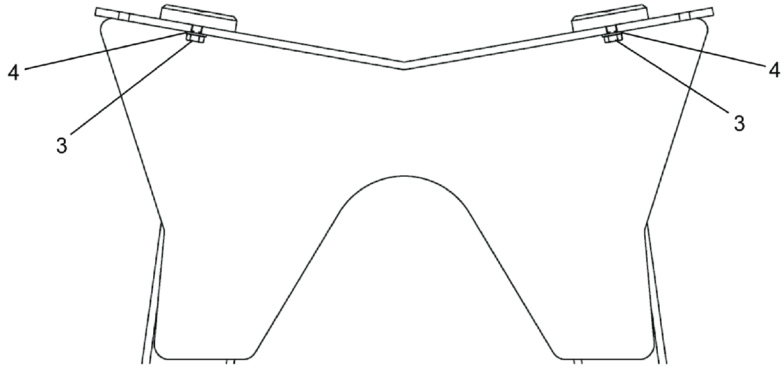

REF	PART NO.	DESCRIPTION	QTY
	698-00065 (Rev. A)	*Boom Rest ASSY*	
1	709-01835	Boom Rest Weldment	1
2	729-02883	Boom Rest Pad	2
3	SHF-312C625-25	SCR, HHCS 0.312-18X0.625, STZ G5	4
4	WAH-31NX000-Y2	WSH, FL HRD A-NRW 0.3125, ST YZ	4

WHEN ORDERING PARTS, SPECIFY MODEL NUMBER, SERIAL NUMBER AND DESCRIPTION OF PARTS REQUIRED

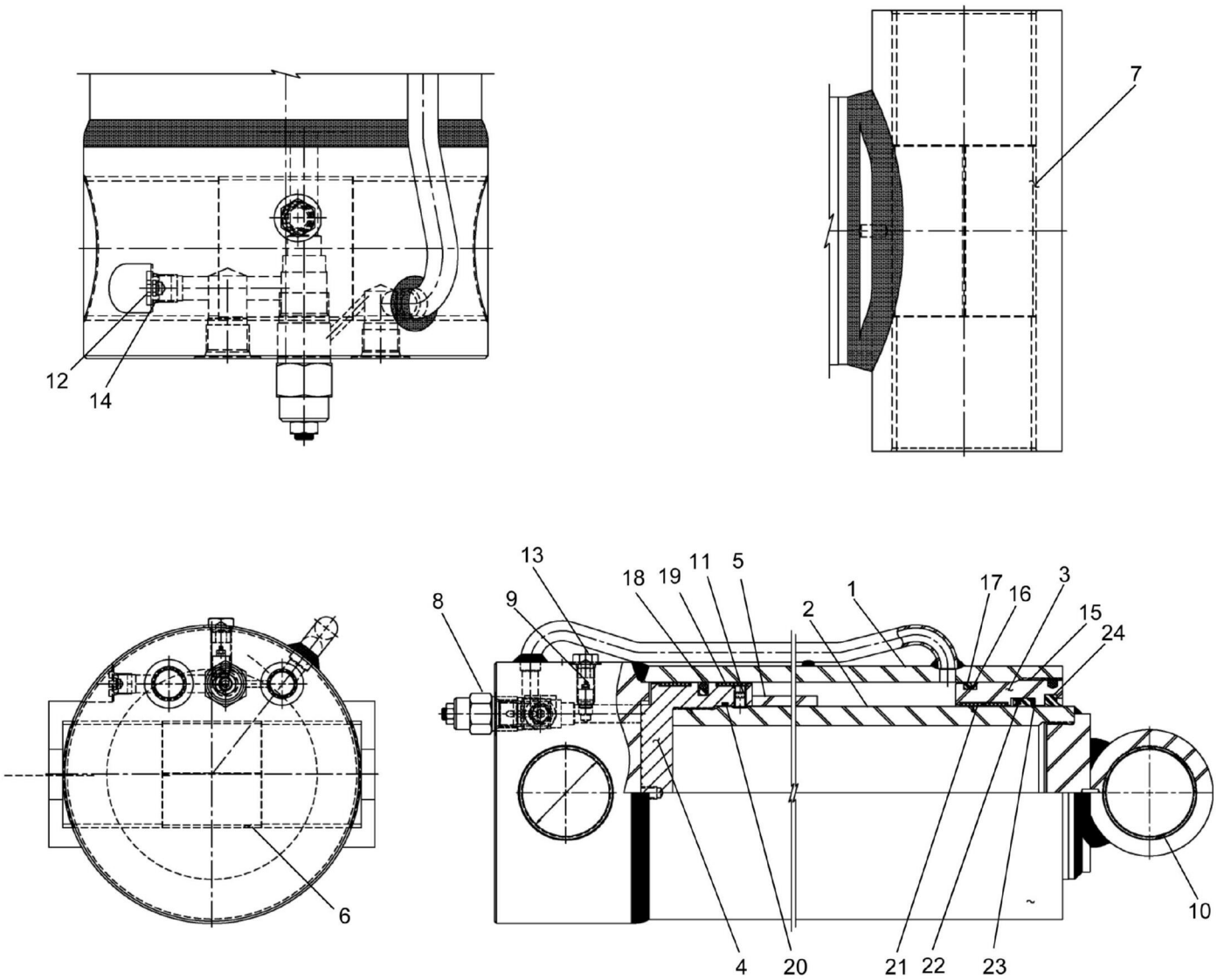

WHEN ORDERING PARTS, SPECIFY MODEL NUMBER, SERIAL NUMBER AND DESCRIPTION OF PARTS REQUIRED

REF	PART NO.	DESCRIPTION	QTY
	T117684 (Rev. A)	*Cylinder, HYD, Boom Hoist*	
	223283	Kit seal 7.000 5.470	1
1	223259	Case Weld G7.000 112.625L	1
2	223260	Rod Weld Tube G 5.470 112.000L	1
3	223261	Head G7.000 5.470 3.375L STL	1
4	223262	Piston G 7.000 0.000 3.500L	1
5	223263	Spacer G 5.490 6.125 4.500L	1
6	223264	Bush Spacer G 3.000 2.719L	1
7	223265	Bush Spacer G 3.000 3.469L	1
8	223266	Valve CBAL CBEB-LHN 4000	1
9	223267	Valve VEL Fuse RBE-9/16-18SAE	1
10	223268	Bush 2.750 2.938 2.750 FG	4
11	223269	SHSS .375-16 .500 Cup PT	2
12	223270	Plug SAE 6.563 -18 SH STL	1
13	223271	Plug SAE 6.563 -18 HH STL	1
14	223272	O-Ring 906 .6240D 70N 0.078 CS	2
15	223273	Plug Nylon G . 313D .250L	1
16	223274	Backup 439 7.000OD 1758 .250CS	1
17	223275	O-Ring 439 7.000OD 70N .250CS	1
18	223276	Seal 7.000B 6.173 .323 GLYD T	1
19	223277	Wring 7.000 6.750 1.000 SC	2
20	223278	O-Ring 254 5.740OD 70N .125CS	1
21	223279	Wring G 5.750 5.480 .750L SK	2
22	223280	U Cup 5.500R 0.250CS .563L DZ	1
23	223281	UCB G 5.490 5.965 .125 NYT	1
24	223282	Wiper 5.500 .375 .375 D	1

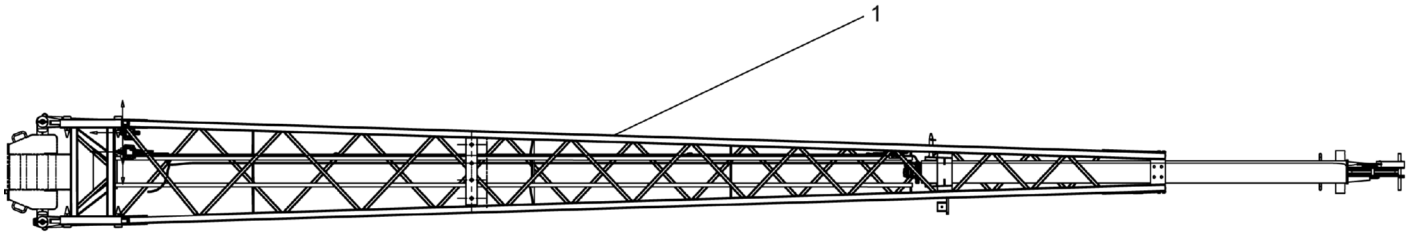

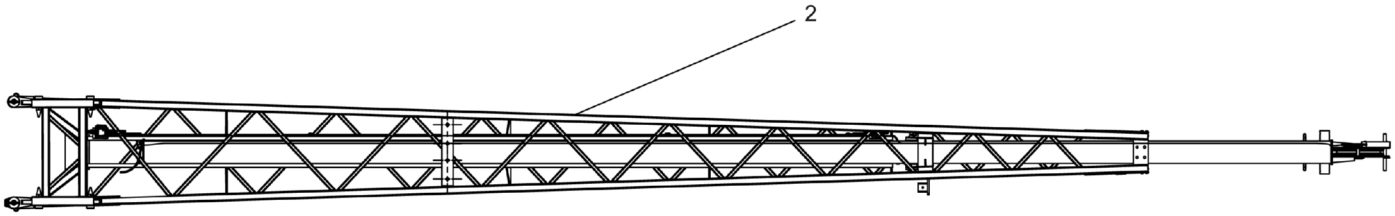

REF	PART NO.	DESCRIPTION	QTY
	28-106-JIB OPT* (Rev. 00)	*Jib Options*	
1	**T117821**	Jib ASSY, 4 Foot Stinger (see page 46)	1
2	**T138547**	Offsetttable Jib ASSY, Phoenix (see page 51)	1

* NOT PURCHASABLE AT THIS LEVEL

WHEN ORDERING PARTS, SPECIFY MODEL NUMBER, SERIAL NUMBER AND DESCRIPTION OF PARTS REQUIRED

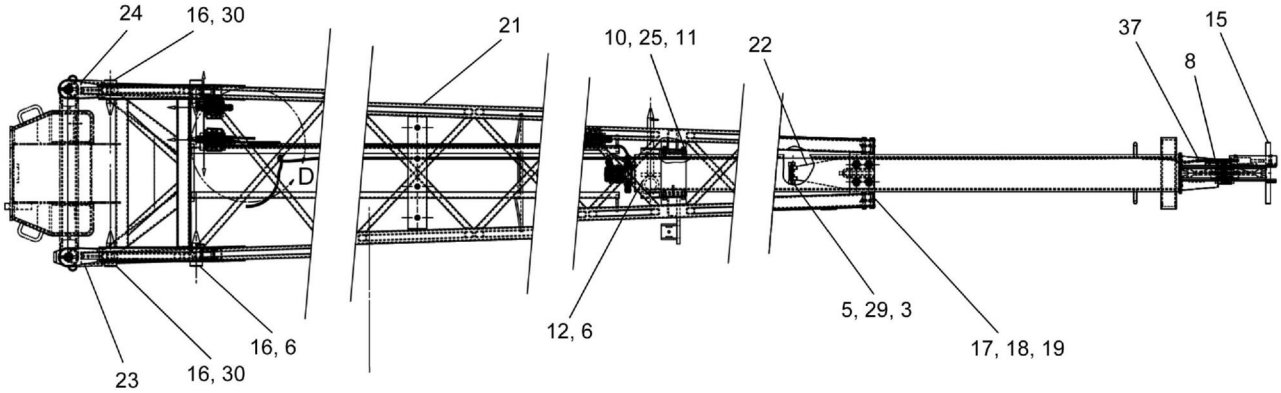

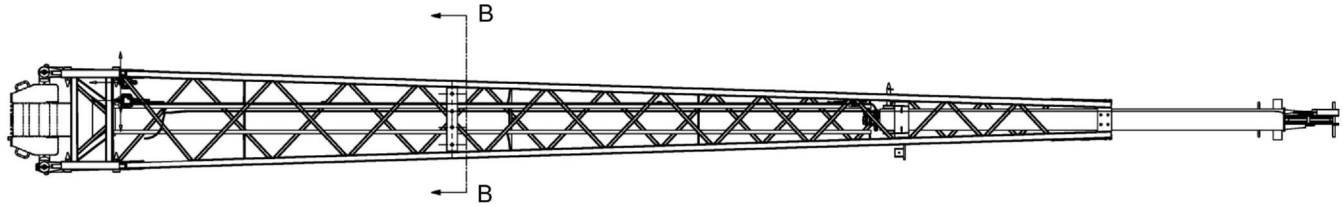

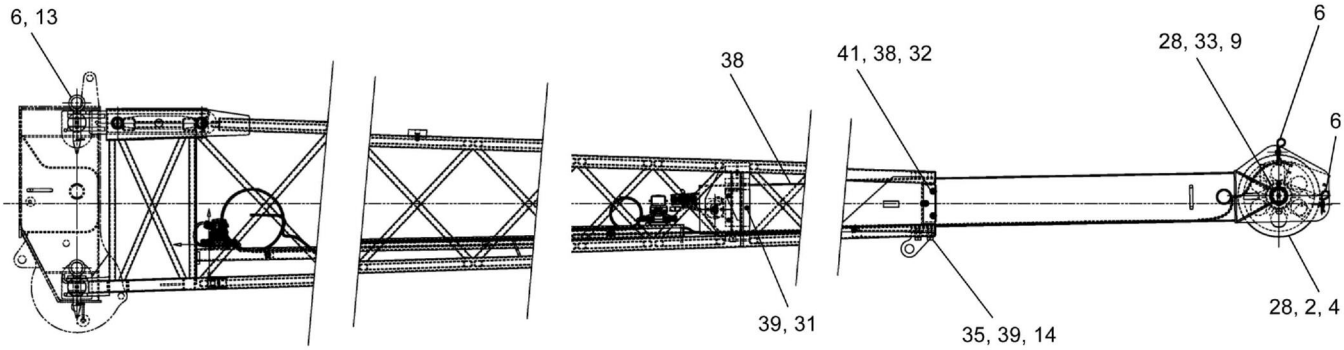

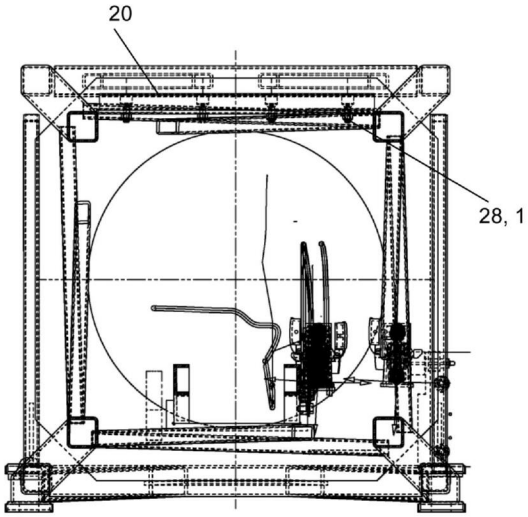

SECTION B-B

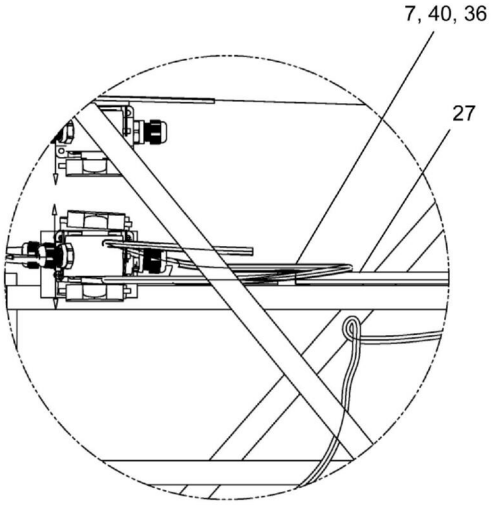

DETAIL D

WHEN ORDERING PARTS, SPECIFY MODEL NUMBER, SERIAL NUMBER AND DESCRIPTION OF PARTS REQUIRED

REF	PART NO.	DESCRIPTION	QTY
	T117821 (Rev. B)	*Jib ASSY, 4 Foot Stinger*	
1	1203-165	Flat SOC .38 X 1.25	4
2	1209-79	Spacer	2
3	1213-11	Fitting, Grease STR	4
4	1213-3	Grease FTG, Zerk 0.125NPT 45°	1
5	1217-49	CAM Follower	2
6	1222-239	Pin, Hair Cotter	11
7	1240-68	Clamp	5
8	38490	Pin	1
9	65344	Shaft	1
10	707-8525	Plate	2
11	707-8788	Shim	2
12	707F8527	Pin	1
13	707F8530	Pin	4
14	708-0260	Shim	4
15	708-0267	Pin	1
16	709-7290	Pin	4
17	709-7296	Plate	2
18	709-7297	Shim	4
19	709-7298	Shim	2
20	709-7304	Wear Pad 18.00 X 3.00 X 1.00	1
21	709F7078	Jib 26 FT.	1
22	709F7154	Bracket	1
23	709F7537	Link	1
24	709F7538	Link	1
25	710-0052	Shim	4
26*	**712A0208**	Jib Stowage ASSY (see page 48)	1
27	720-0541	Tube, 197"	1
28	A38933	Sheave	1
29	NYL-375C000-25	Nut, HEX NYL-INS 0.375-16, ST Z G5	5
30	NYL-438F000-25	Nut, HEX NYL-INS 0.438-20, ST SQC G5	2
31	P22-219XB00-GP	Pin, Spring SLTD 0.2188 X 2.00, ST	2
32	S01-375CA25-25	SCR, HHCS 0.375-16 X 1.25, ST SQC G5	6
33	S01-375CB25-25	SCR, HHCS 0.375 X -16X2.25, ST Z GR5	6
34*	S01-375CC50-25	SCR, HHCS 0.375-16X3.50, ST Z GR5	1
35	S01-625CA50-25	SCR, HHCS 0.625-11X1.50,STZGR5	4
36	SHF-375C750-25	SCR, HHCS FT 0.375-16 X 0.75, ST SQC G5	5
37	**T115195**	Assembly, Jib Electrical (4 Foot) (see page 50)	1
38	T117822	Jib Stinger 4 Foot	1
39	W07-375X000-20	WSH, LCK, MED SPLT 0.375, ST Z	12
40	W07-625X000-20	WSH, LCK, MED SPLT 0.625, ST SQC	4
41	WAW-37WX000-20	WSH, FL TYPA-WID 0.375, ST SQC	11

* ITEM NOT SHOWN IN ILLUSTRATION

WHEN ORDERING PARTS, SPECIFY MODEL NUMBER, SERIAL NUMBER AND DESCRIPTION OF PARTS REQUIRED

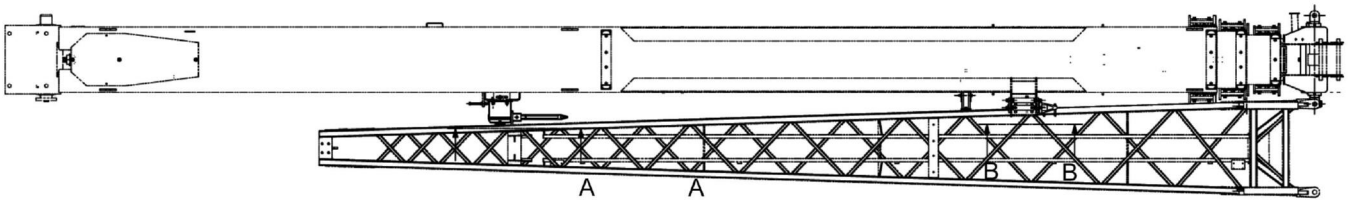

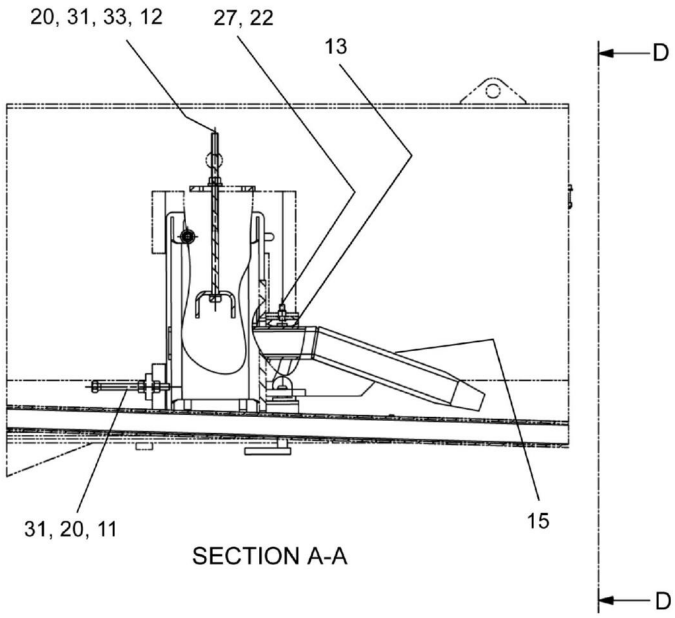

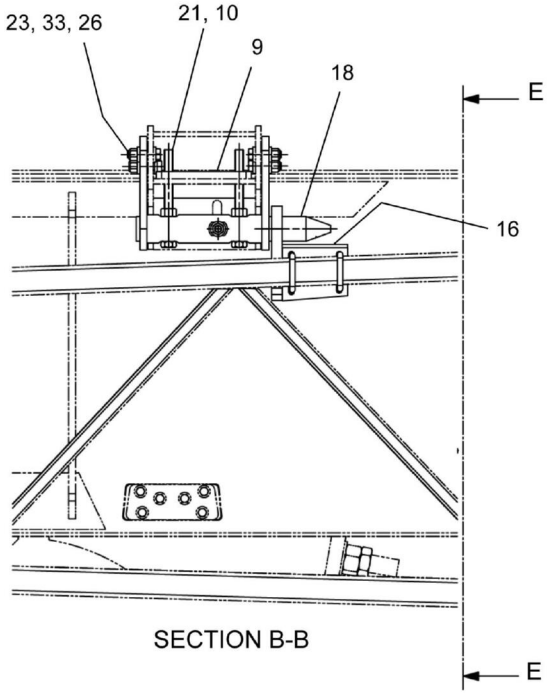

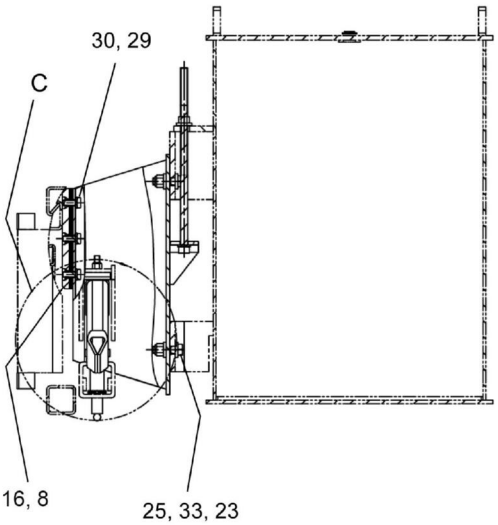

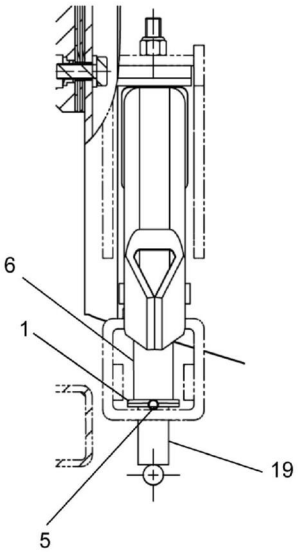

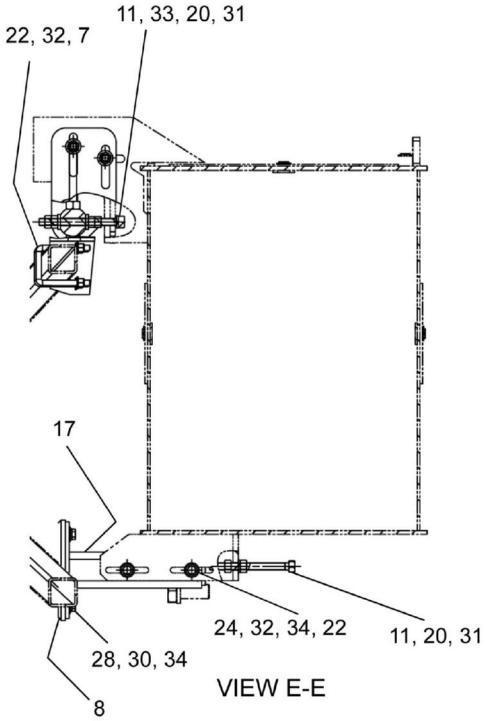

WHEN ORDERING PARTS, SPECIFY MODEL NUMBER, SERIAL NUMBER AND DESCRIPTION OF PARTS REQUIRED

REF	PART NO.	DESCRIPTION	QTY
	712A0208 (Rev. F)	*Jib Stowage ASSY*	
1	1208-7	Machinery Bushing	2
2*	12178-1	Rope	1
3*	1222-202	Tie PLAS CABL NT340 15"	2
4*	1222-364	Safety Snap Jib Stowage GRP	1
5	P22-250XA75-G2	Pin, Spring SLTD 0.25 X 1.75, ST SQC	1
6	371-0101	Spring	1
7	708-2742	Rod	2
8	709-1564	Pad	2
9	709-7342	Bar, Threaded, 0.625-11	1
10	709-7358	Capscrew, 0.625-11 X 6.5, 5.5 Inches Of Thread	2
11	S01-500CE50-25	SCR, HHCS 0.50-13 X 5.50, ST SQC G5	3
12	709-7360	Capscrew, 0.50-13 X 12.5, 7.50 Inches Of Thread	1
13	709-7384	Wear Pad 2.50 X 1.875 X 0.50	1
14*	709-7386	Plate	4
15	709F7316	Bracket, Jib	1
16	709F7327	Bracket	1
17	709F7335	Bracket	1
18	709F7377	Bracket	1
19	712F0215	Handle	1
20	N04-500C000-25	Nut, HEX 0.50 - 13, ST Z GR5	9
21	N04-625C000-25	Nut, HEX 0.625-11, ST SQC G5	2
22	NYL-375C000-25	Nut, HEX NYL-INS 0.375-16, ST Z G5	7
23	NYL-500C000-25	Nut, HEX NYL - INS 0.50-13, ST Z G5	8
24	S01-375CD00-25	SCR, HHCS 0.375-16 X 4.00, ST SQC G5	2
25	S01-500CA75-25	SCR, HHCS 0.50-13 X l.75, ST Z GR5	4
26	S01-500CB00-25	SCR, HHCS 0.50-13X2.00, ST Z GR5	4
27	S16-375CA25-20	SCR, FHSHCS 0.375-16 X 1.25, ST SQC	1
28	SMF-10CM020-28	SCR, HHCS M10-1.5 X 20 FT, ST SQC C8.8	2
29	SMF-10CM025-28	SCR, HHCS M10-1.5 X 25 FT, ST SQC C8.8	3
30	W07-438X000-20	WSH, LCK, MED SPLT 0.4375, ST SQC	5
31	W07-500X000-20	WSH, LCK, MED SPLT 0.50, ST Z	5
32	WAH-37NX000-20	WSH, FL HRD A-NRW 0.375, ST SQC	8
33	WAJ-500X000-20	WSH, FL HRD A-REG 0.50, ST SQC	19
34	WAW-37WX000-20	WSH, FL TYPA-WID 0.375, ST SQC	6

* ITEM NOT SHOWN IN ILLUSTRATION

WHEN ORDERING PARTS, SPECIFY MODEL NUMBER, SERIAL NUMBER AND DESCRIPTION OF PARTS REQUIRED

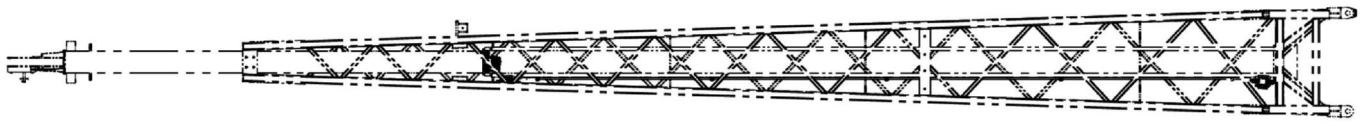

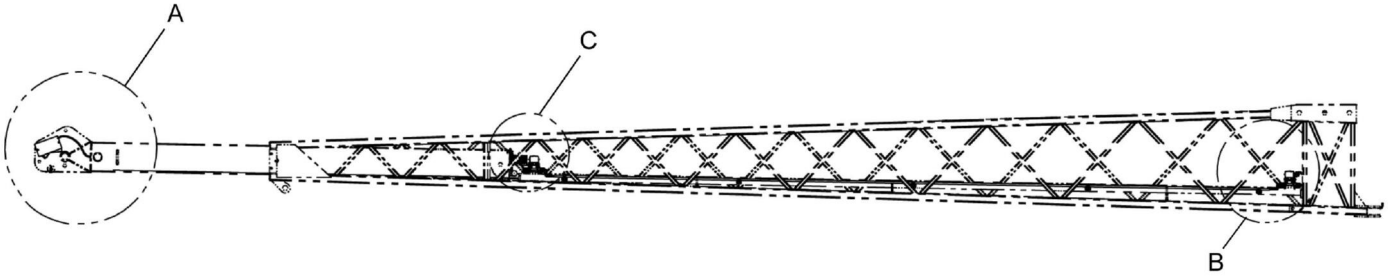

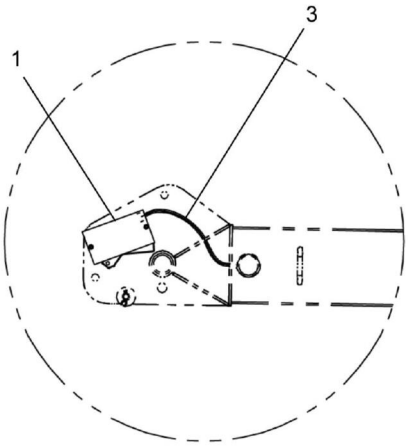

DETAIL A

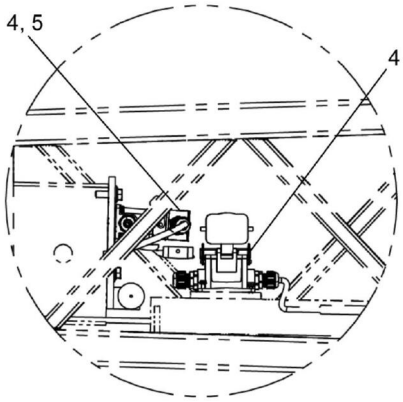

DETAIL C

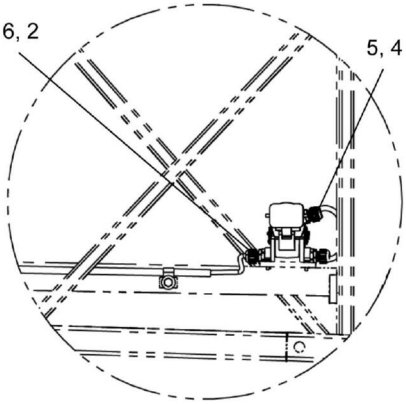

DETAIL B

REF	PART NO.	DESCRIPTION	QTY
	T115195 (Rev. B)	*Assembly, Jib Electrical (4 Foot)*	
1	709-7821	Switch	1
2	S41-508M016-20	SCR, CREC RNDMS M5X0.8X16, ST Z	12
3	T116674	Cable, 2 Conductor	1
4	T127374	Base, Weidmuller	3
5	T127379	Hood, Weidmuller	2
6	W07-190X000-20	WSH, LCK, MED SPLT 10, ST Z	12

WHEN ORDERING PARTS, SPECIFY MODEL NUMBER, SERIAL NUMBER AND DESCRIPTION OF PARTS REQUIRED

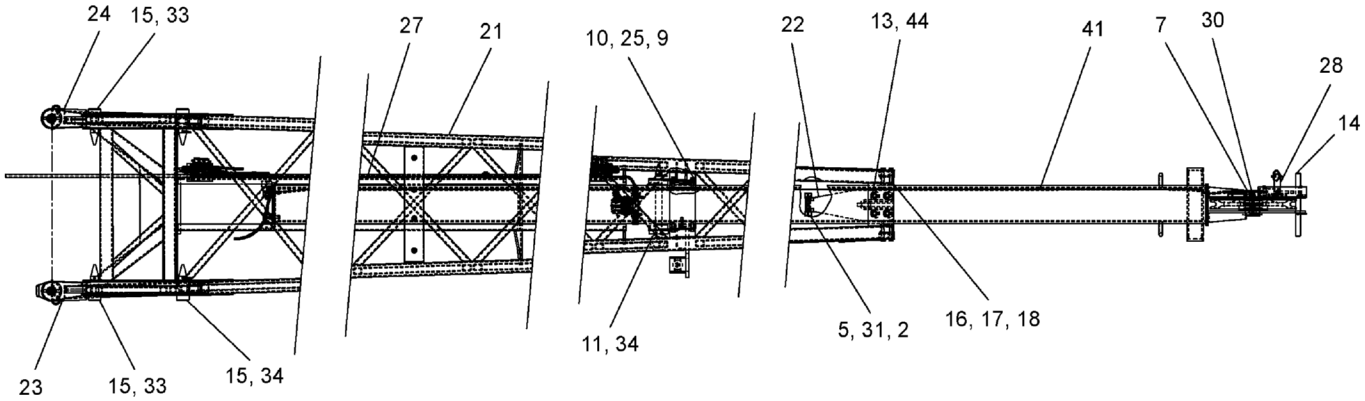

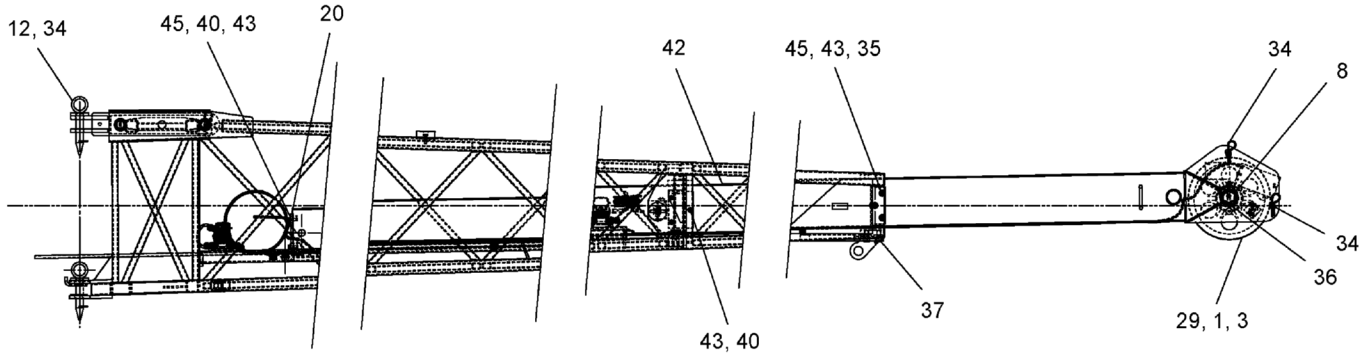

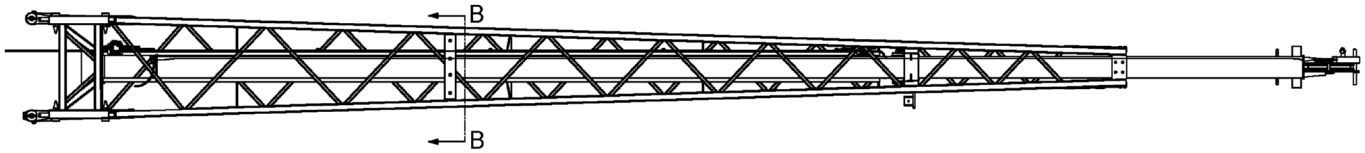

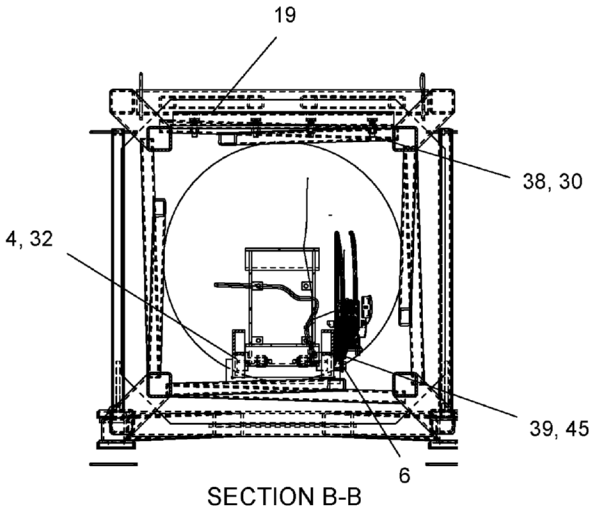

SECTION B-B

WHEN ORDERING PARTS, SPECIFY MODEL NUMBER, SERIAL NUMBER AND DESCRIPTION OF PARTS REQUIRED

REF	PART NO.	DESCRIPTION	QTY
	T138547 (Rev. D)	*Offsetttable Jib ASSY, Phoenix*	
1	1209-79	Spacer	2
2	1213-11	Fitting, Grease STR	4
3	1213-3	Grease FTG, Zerk 0.125NPT 45°	1
4	1217-349	Roller, CAM DIA 1.5 X .88 THK	2
5	1217-49	CAM Follower	2
6	200B2007-4	Clamp, MED, 1/2 ID	5
7	38490	Pin	1
8	65344	Shaft	1
9	707-8525	Plate	2
10	707-8788	Shim	2
11	707F8527	Pin	1
12	707F8530	Pin	4
13	708-0260	Shim	4
14	708-0267	Pin	1
15	709-7290	Pin	4
16	709-7296	Plate	2
17	709-7297	Shim	4
18	709-7298	Shim	2
19	709-7304	Wear Pad 18.00 X 3.00 X 1.00	1
20	709F6690	Bracket	1
21	709F7078	Jib 26 FT.	1
22	709F7154	Bracket	1
23	709F7537	Link	1
24	709F7538	Link	1
25	710-0052	Shim	4
26*	**712A0208**	Jib Stowage ASSY (see page 48)	1
27	720-0541	Tube, 197"	1
28	774-00054	Adapter Bracket, ATB SW	1
29	A38933	Sheave	1
30	NYL-375C000-25	Nut, HEX NYL-INS 0.375-16, ST Z G5	5
31	NYL-438F000-25	Nut, HEX NYL-INS 0.438-20, ST SQC G5	2
32	NYL-625F000-25	Nut, HEX NYL-INS 0.625-18, ST SQC G5	2
33	P22-219XB00-GP	Pin, Spring SLTD 0.2188 X 2.00, ST	2
34	PHP-178XC75-20	Pin, CTRHAIR 0.178 X 3.75 X 1.03, ST SQC	11
35	S01-375CC00-25	SCR, HHCS 0.375-16 X 3.00, ST SQC G5	6
36	S01-375CC25-25	SCR, HHCS 0.375-16 X 3.25, ST SQC G5	1
37	S14-625CA25-H2	SCR, SHCS 0.625-11 X 1.25, ST SQC	4
38	S16-375CA25-20	SCR, FHSHCS 0.375-16 X 1.25, ST SQC	4
39	SHF-375C750-25	SCR, HHCS FT 0.375-16 X 0.75, ST SQC G5	5
40	SHF-375CA25-25	SCR, HHCS FT 0.375-16X1.25, ST SQC G5	10
41	**T115195**	Assembly, Jib Electrical (4 Foot) (see page 50)	1
42	**T117820**	Jib Stinger (see page 53)	1
43	W07-375X000-20	WSH, LCK, MED SPLT 0.375, ST Z	16
44	W07-625X000-20	WSH, LCK, MED SPLT 0.625, ST SQC	4
45	WAW-37WX000-20	WSH, FL TYPA-WID 0.375, ST SQC	15

* ITEM NOT SHOWN IN ILLUSTRATION

WHEN ORDERING PARTS, SPECIFY MODEL NUMBER, SERIAL NUMBER AND DESCRIPTION OF PARTS REQUIRED

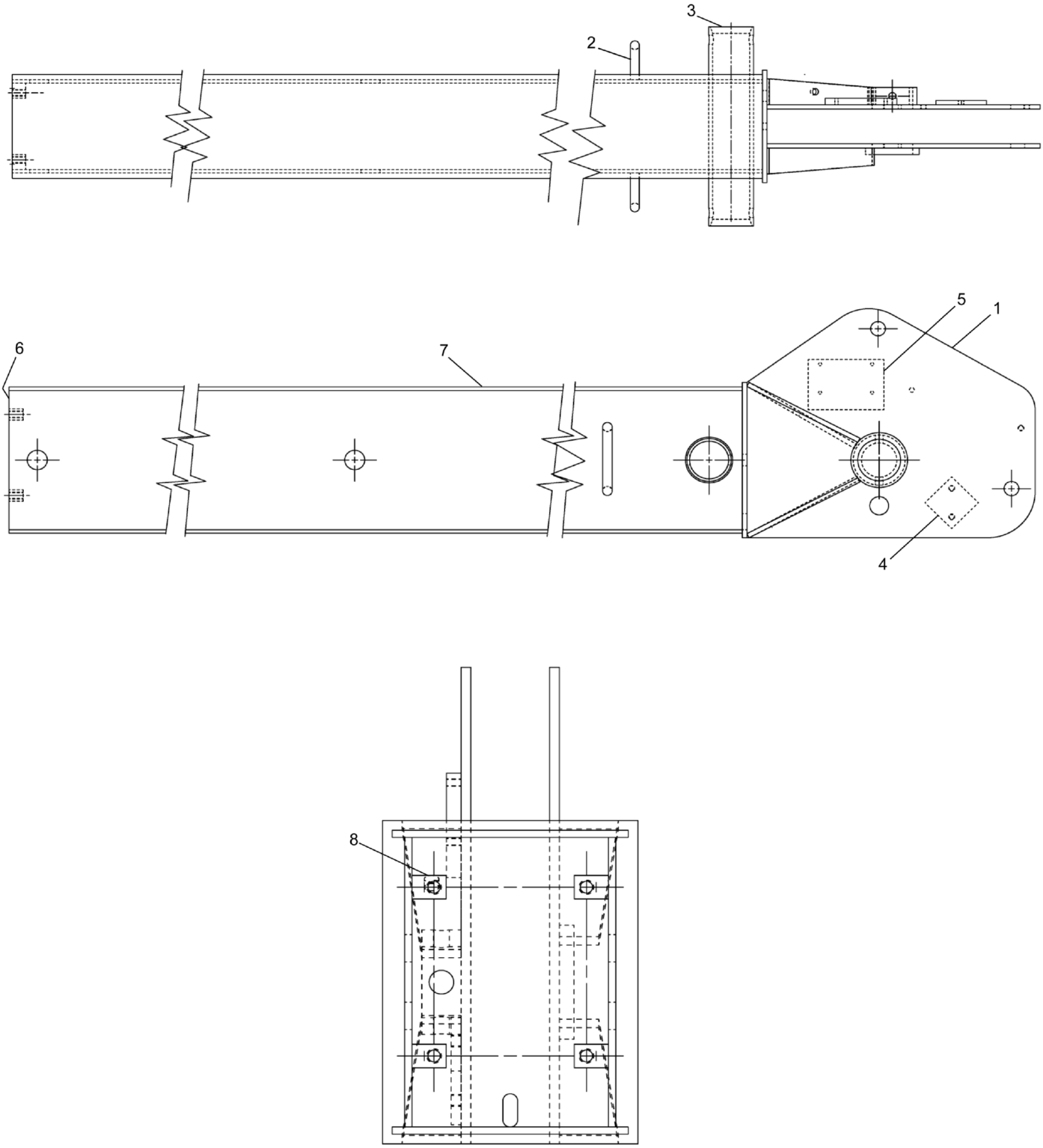

WHEN ORDERING PARTS, SPECIFY MODEL NUMBER, SERIAL NUMBER AND DESCRIPTION OF PARTS REQUIRED

LOAD KING BY CUSTOM TRUCK 1 SOURCE	**JIB STINGER ASSEMBLY**	DATE: Released 03-2015	**CHAPTER**
		MODEL: 28-106	**1**
		PAGE: 53	

REF	PART NO.	DESCRIPTION	QTY
	T117820 (Rev. A)	*Jib Stinger*	
1	708F0288	Head	1
2	729-00683	Anchor, Safety Harness	2
3	782-01239	Tube, Bucket Support	1
4	729-02851	Plate, Mounting, LMI Switch	1
5	706-8189	Plate 4.00 X 2.75 X 0.375	1
6	T105099	Plate	2
7	T110513	Plate, Stinger Top/BTM	2
8	T112498	Block, Weld, Stinger	4

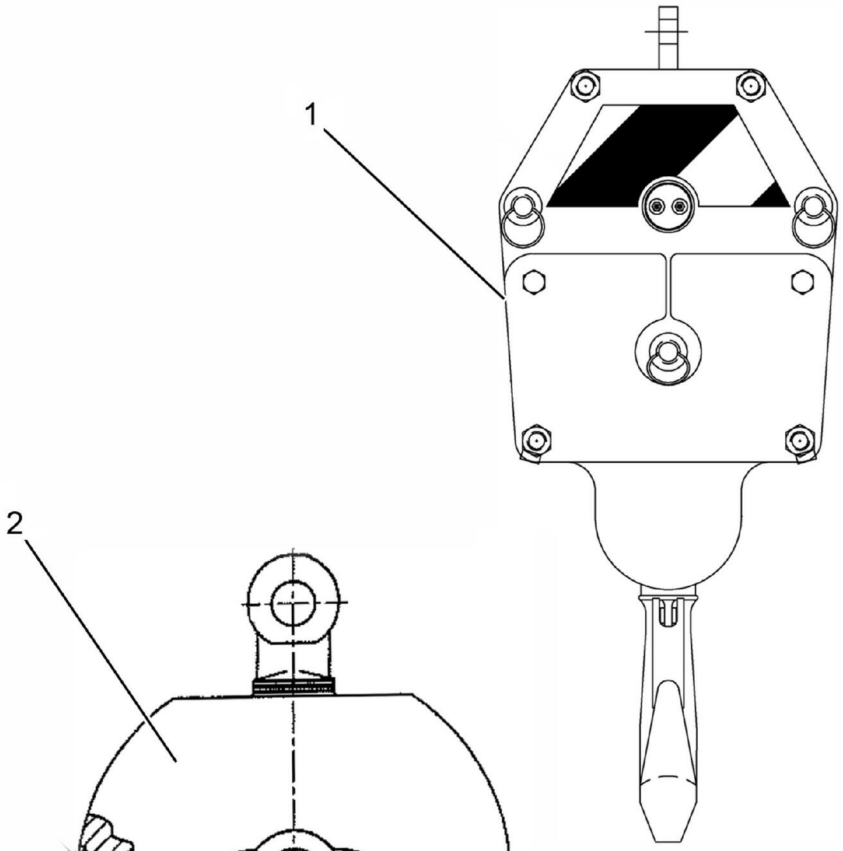
1

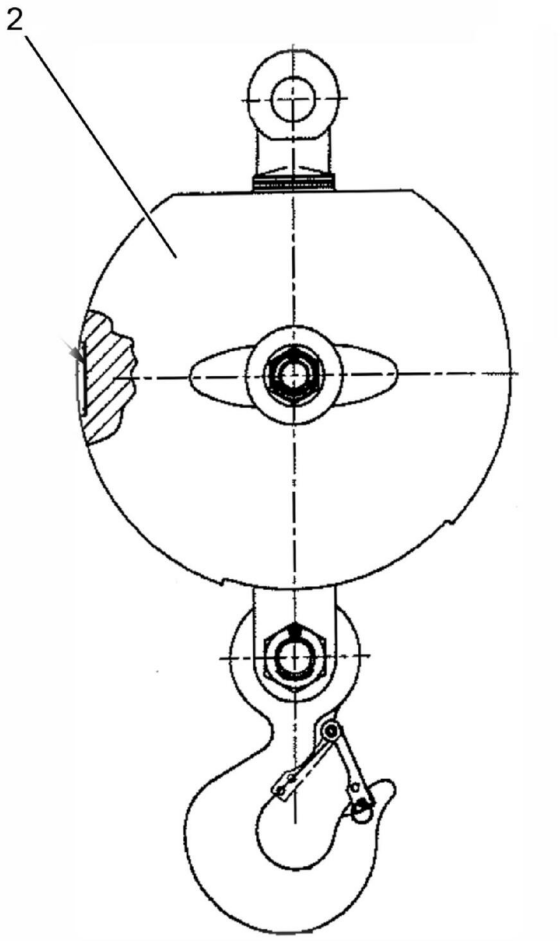
2

3

REF	PART NO.	DESCRIPTION	QTY
	28-106-HK/LD BALLS & ROPE* (Rev. 00)	*Hook Block, Load Ball & Wire Rope Options*	
1	**T115989**	Load Block ASSY, Q Reeve 15T, 2 or 3 Part 1 Sheave (see page 57)	1
1A	**T123389**	Load Block ASSY, Q Reeve 30T, 5 Part 3 Sheave (see page 60)	1
1B	**T115990**	Load Block ASSY, Q Reeve 25T, 4 or 5 Part 2 Sheave (see page 61)	1
2	**861-90367**	Non-Swivel Overhaul Ball 7 Ton (see page 64)	1
2A	**861-60090**	Hook Ball 7 Ton Swivel (see page 66)	1
3	T105997	9/16 Wire Rope 6X36 EEIPS X 350 FT2	1
3A	T115826	9/16 DIA Wire Rope (350') - Rotation Resistant	1

* NOT PURCHASABLE AT THIS LEVEL

WHEN ORDERING PARTS, SPECIFY MODEL NUMBER, SERIAL NUMBER AND DESCRIPTION OF PARTS REQUIRED

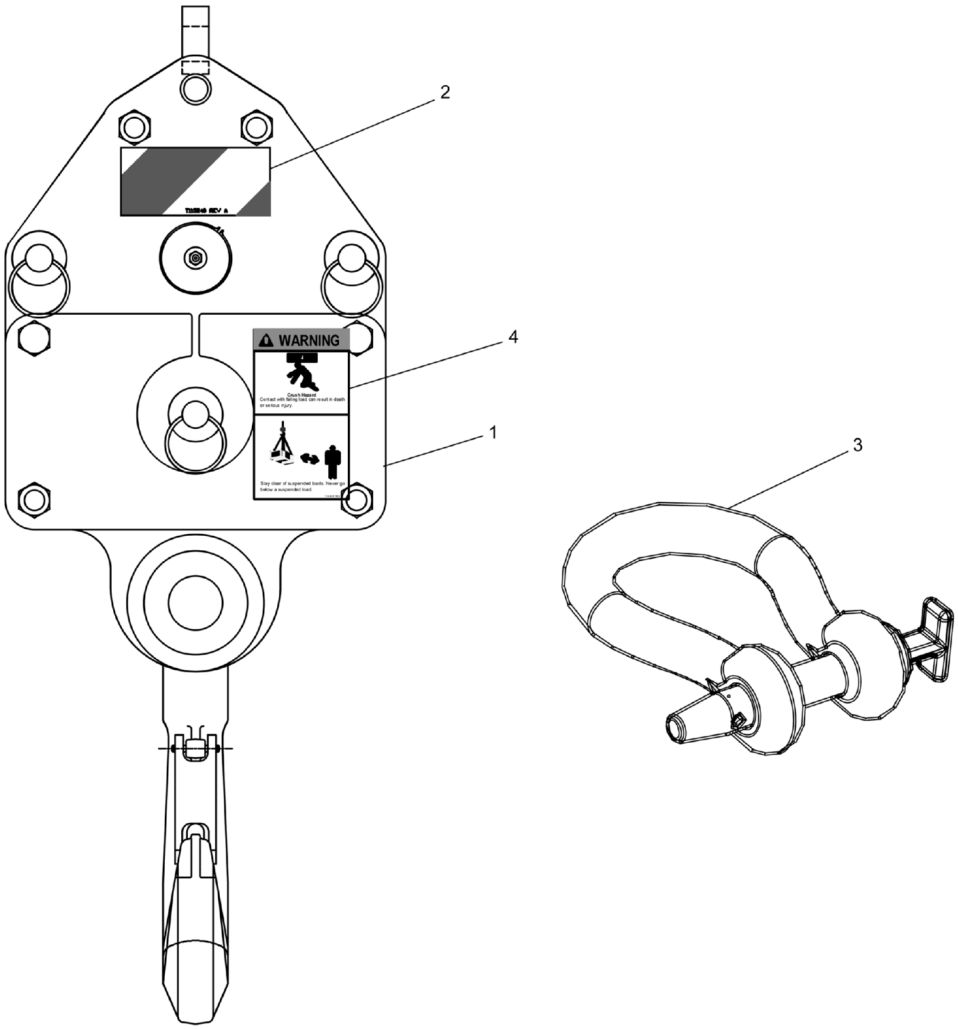

REF	PART NO.	DESCRIPTION	QTY
	T115989 (Rev. E)	*Load Block ASSY, Q Reeve 15T, 2 or 3 Part 1 Sheave*	
1	**861-60109**	Load Block, Q Reeve, 15T, 1 Sheave (see page 58)	1
2	1007053	Safety Stripe 2.5 X 5.5	2
3	T147170	Clevis Assembly 7/8 X 4-1/4	1
4	T140607	Decal - Crush Hazard, Stay Clear Of Load (VERT)	2

WHEN ORDERING PARTS, SPECIFY MODEL NUMBER, SERIAL NUMBER AND DESCRIPTION OF PARTS REQUIRED

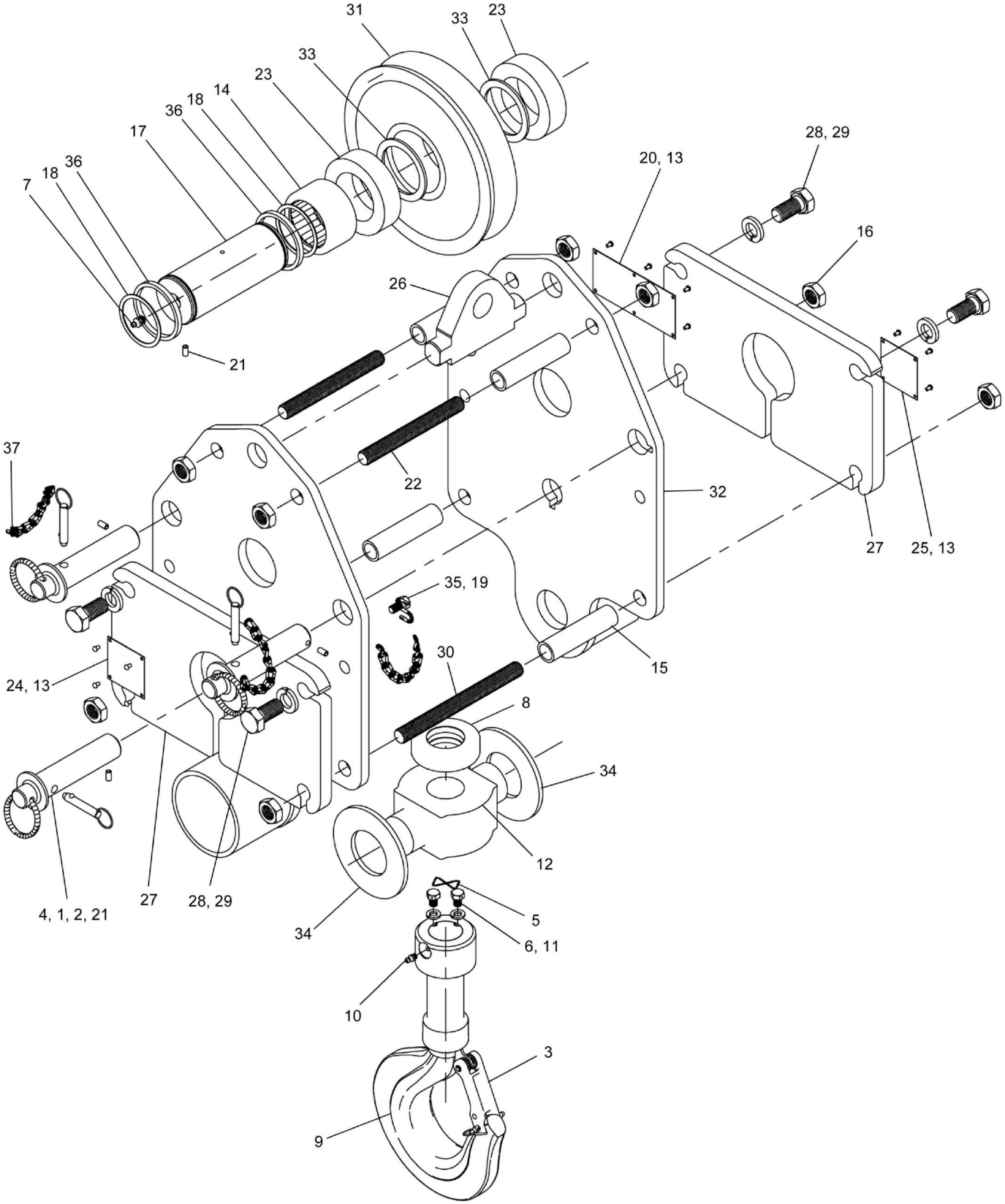

WHEN ORDERING PARTS, SPECIFY MODEL NUMBER, SERIAL NUMBER AND DESCRIPTION OF PARTS REQUIRED

LOAD KING BY CUSTOM TRUCK 1 SOURCE	**HOOK BLOCK - 1 SHEAVE/15 TON**	DATE: Revised 01-2013	**CHAPTER**
		MODEL: 28-106	**1**
		PAGE: 58	

REF	PART NO.	DESCRIPTION	QTY
	861-60109 (Rev. A)	*Load Block, Q Reeve, 15T, 1 Sheave*	
1	215303	2 Ring Split	3
2	215290	Pin QK-REL0.38ODX1.50LG	3
3	217143	A15J Latch Kit Installed	1
4	221153	Pin QK Reeve 1.25ODX5.35LG	3
5	217119	1/32 STN Safety Wire	1
6	217898	Screw Cap HX0.38ODX0.50LG NC	2
7	215304	Fitting 1/8NPT	1
8	215312	T176 RT BRG	1
9	221154	J 15HK&Nut F-A	1
10	215286	28 Fitting 1/4	1
11	217899	L WASH 3/8	2
12	215311	J DHSG Casting	1
13	216955	Screw DR RD0.14ODX0.25 LGNC CD	14
14	215278	BRG R 3.25ODX2.50IDX1.75WD	1
15	221148	Spacer 1.05ODX0.75IDX4.31 LG	4
16	219133	10 Nut J 3/4	8
17	219135	Pin Center 2.50ODX6.44LG-1	1
18	215294	SPRLOX21/2	2
19	215301	S Hook	1
20	217135	QRJ Caution Plate	1
21	215305	Roll Pin 0.25 DIA X .50 DEEP	4
22	221155	T Bolt 6.50X3/4	2
23	219136	SPR 4.00ODX2.53IDX1.09LG	2
24	220256	Name Plate Load King F/Block	1
25	220253	Caut Plate Load King	1
26	221156	QRJ D End 1 TRN	1
27	221157	PLT CKWT QRJBK 10SHV.75TK	2
28	215901	Screw Cap HX0.75ODX1.50LG NC	4
29	215287	L WASH 3/4	4
30	221161	T Bolt 0.75ODX8.00LG ALL THD	2
31	221150	#10A 10SHV	1
32	221158	QRJ 10PL Group W/Stabilizer	1
33	219137	WASH TH 3.24ODX2.52IDX0.13TKBR	2
34	215326	SPR 4.75ODX2.38IDX0.22LG	2
35	221159	Screw Cap HX0.38ODX0.75LG NC	1
36	221160	SPR 3.00ODX2.63IDX0.25LG	2
37	215291	NO-3 MACH Twist Link Chain	3

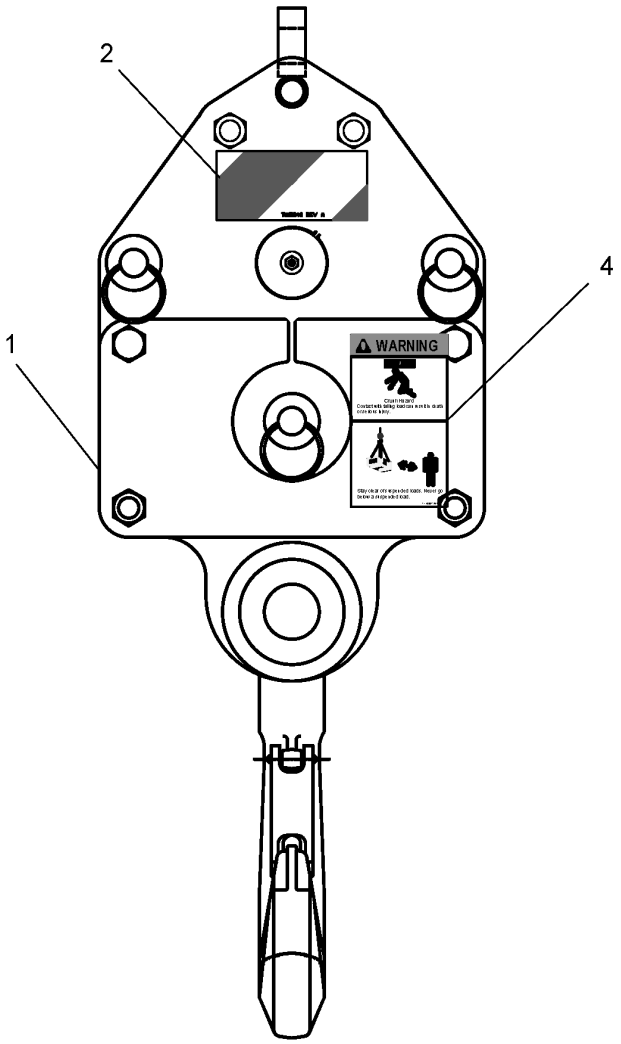

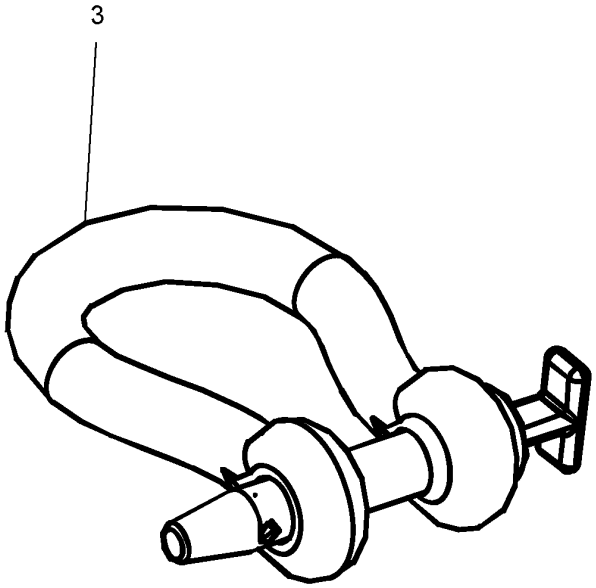

REF	PART NO.	DESCRIPTION	QTY
	T123389 (Rev. C)	*Load Block ASSY, Q Reeve 30T, 5 Part 3 Sheave*	
1	T119374	Hook Block - 3 Sheave 30 Ton	1
2	1007053	Safety Stripe 2.5 X 5.5	2
3	T147170	Clevis Assembly 7/8 X 4-1/4	1
4	T140607	Decal - Crush Hazard, Stay Clear Of Load (VERT)	2

WHEN ORDERING PARTS, SPECIFY MODEL NUMBER, SERIAL NUMBER AND DESCRIPTION OF PARTS REQUIRED

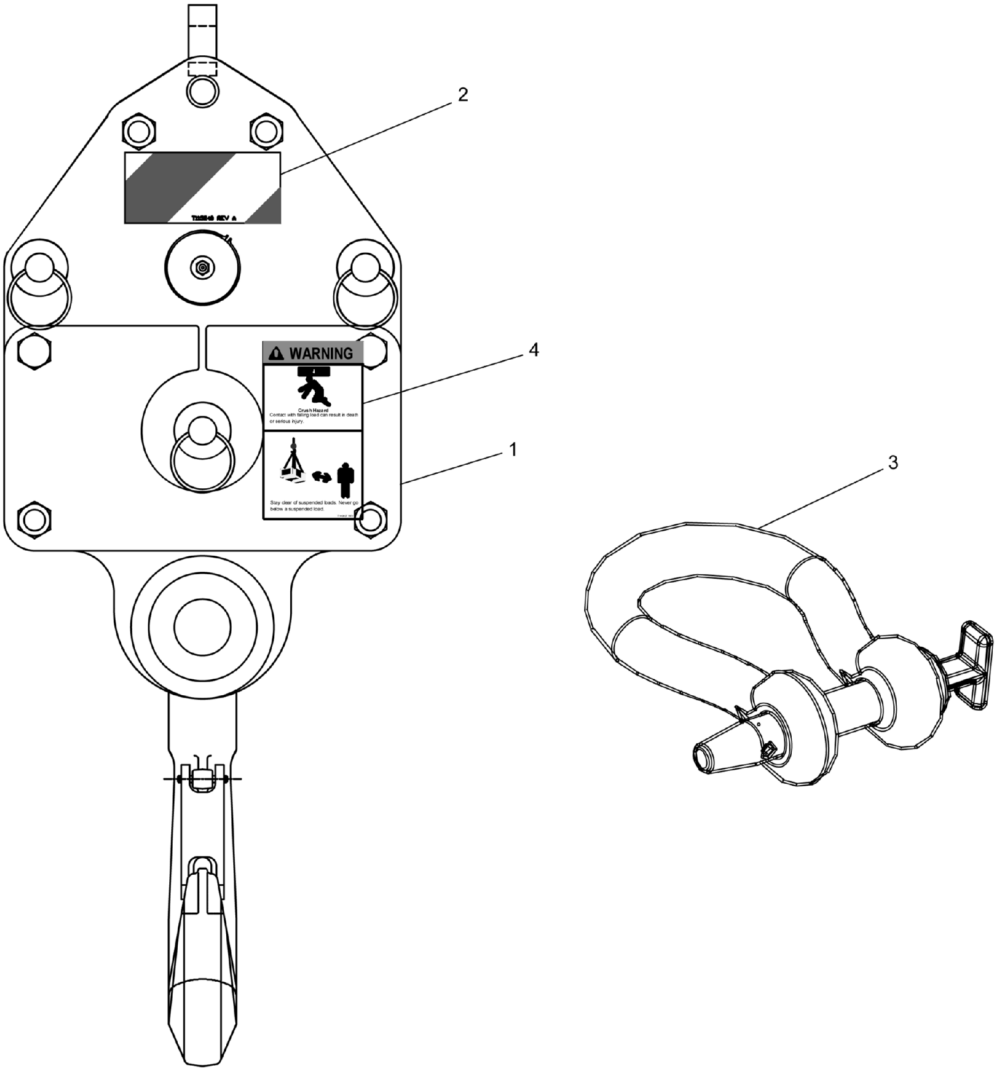

REF	PART NO.	DESCRIPTION	QTY
	T115990 (Rev. E)	*Load Block ASSY, Q Reeve 25T, 4 or 5 Part 2 Sheave*	
1	**861-60110**	Load Block, Q Reeve, 25T, 2 Sheave (see page 62)	1
2	1007053	Safety Stripe 2.5 X 5.5	2
3	T147170	Clevis Assembly 7/8 X 4-1/4	1
4	T140607	Decal - Crush Hazard, Stay Clear Of Load (VERT)	2

WHEN ORDERING PARTS, SPECIFY MODEL NUMBER, SERIAL NUMBER AND DESCRIPTION OF PARTS REQUIRED

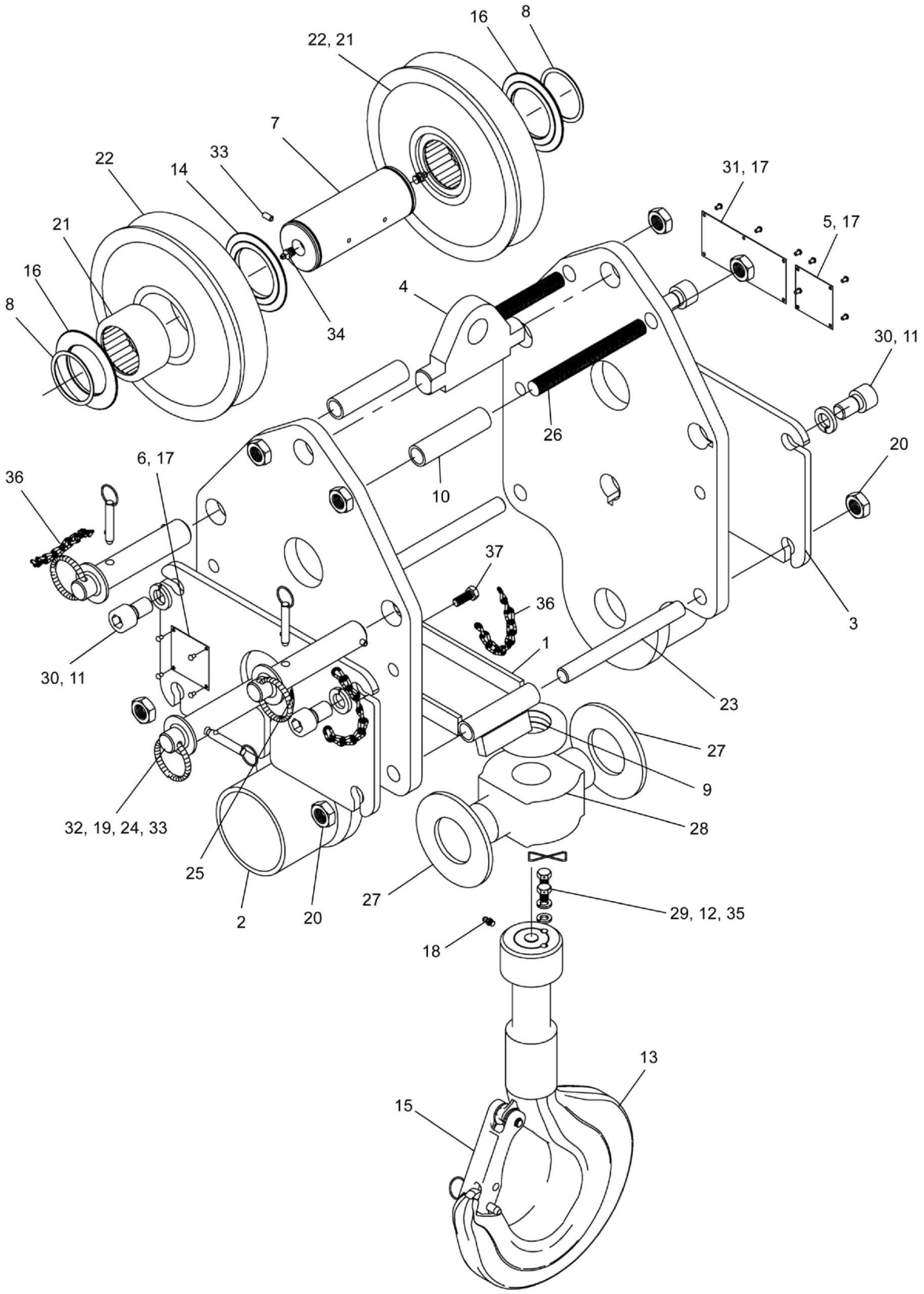

WHEN ORDERING PARTS, SPECIFY MODEL NUMBER, SERIAL NUMBER AND DESCRIPTION OF PARTS REQUIRED

LOAD KING BY CUSTOM TRUCK 1 SOURCE	**HOOK BLOCK - 2 SHEAVE/25 TON**	DATE: Revised 01-2013	**CHAPTER**
		MODEL: 28-106	**1**
		PAGE: 62	

REF	PART NO.	DESCRIPTION	QTY
	861-60110 (Rev. A)	*Load Block, Q Reeve, 25T, 2 Sheave*	
1	221144	QRJ 10R Guide AY	1
2	221145	QJ D 10PL Group W/Stabilizer	1
3	221146	PLT CKWT QRJBK 10SHV.75TK	2
4	221147	QRJ D End 1 TRN	1
5	220253	Caut Plate Load King	1
6	220256	Name Plate Load King F/Block	1
7	215317	Pin Center 2.50ODX6.47LG-2	1
8	215294	SPRLOX21/2	2
9	215312	T176 RT BRG	1
10	221148	Spacer 1.05ODX0.75IDX4.31 LG	2
11	215287	L WASH 3/4	4
12	217899	L WASH 3/8	2
13	221149	J 25HK & Nut A25	1
14	215310	WASH TH 4.00ODX2.53IDX0.30TKBR	1
15	215323	A22J Latch Kit Installed	1
16	215309	WASH TH 4.00ODX2.53IDX0.20TKBR	2
17	216955	Screw DR RD0.14ODX0.25 LGNC CD	14
18	215286	28 Fitting 1/4	1
19	215303	2 Ring Split	3
20	219133	10 Nut J 3/4	8
21	215278	BRG R 3.25ODX2.50IDX1.75WD	2
22	221150	#10A 10SHV	2
23	221151	T Bolt 0.75ODX7.75LG ALL THD	2
24	215290	Pin QK-REL0.38ODX1.50LG	3
25	215301	S Hook	1
26	219134	T Bolt 0.75ODX7.00LG ALL THD	2
27	215326	SPR 4.75ODX2.38IDX0.22LG	2
28	215311	J DHSG Casting	1
29	217898	Screw Cap HX0.38ODX0.50LG NC	2
30	221152	Screw Cap SC0.75ODX1.25LG NC	4
31	217135	QRJ Caution Plate	1
32	215321	Pin QK REEVE 1.25ODX5.88LG	3
33	215305	Roll Pin 0.25 DIA X .50 DEEP	4
34	215304	Fitting 1/8NPT	2
35	217119	1/32 STN Safety Wire	1
36	215291	NO-3 MACH Twist Link Chain	3
37	215327	Screw Cap HX0.38ODX1.00LG NC	1

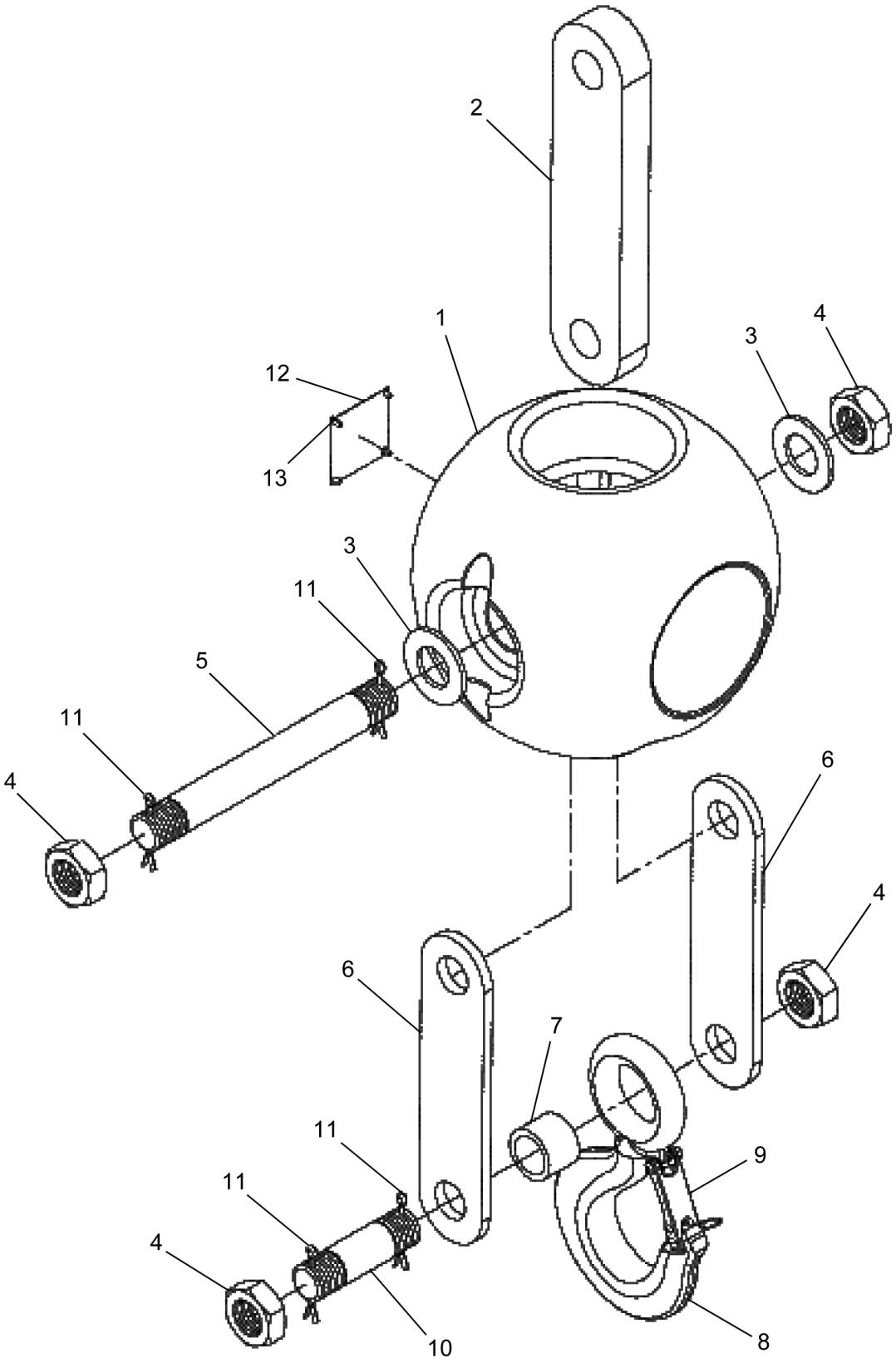

WHEN ORDERING PARTS, SPECIFY MODEL NUMBER, SERIAL NUMBER AND DESCRIPTION OF PARTS REQUIRED

LOAD KING BY CUSTOM TRUCK 1 SOURCE	**NON-SWIVEL OVERHAUL BALL 7 TON**	DATE: Released 02-2013	**CHAPTER**
		MODEL: 28-106	**1**
		PAGE: 64	

REF	PART NO.	DESCRIPTION	QTY
	861-90367 (Rev. 00)	*Non-Swivel Overhaul Ball 7 Ton*	
1	225014	OHB 150 Ball	1
2	225015	OHB ADP B 11/4	1
3	215386	Washer 11/4	2
4	215387	-7 Nut J 11/4	4
5	225016	Pin Latch 1.25ODX10.4LG OHB	1
6	215393	OHB ADP B 3/8	2
7	215392	SPR 1.75ODX1.31IDX1.25LG	1
8	215391	7Eye HK A 7	1
9	219129	A-7J Latch Kit Installed	1
10	215389	Pin Latch 1.25ODX4.38LG	1
11	215388	Pin Cotter 0.19ODX1.75LG	4
12	219778	Name Plate Load King	1
13	216955	Screw DR RD0.14ODX0.25 LGNC CD	4

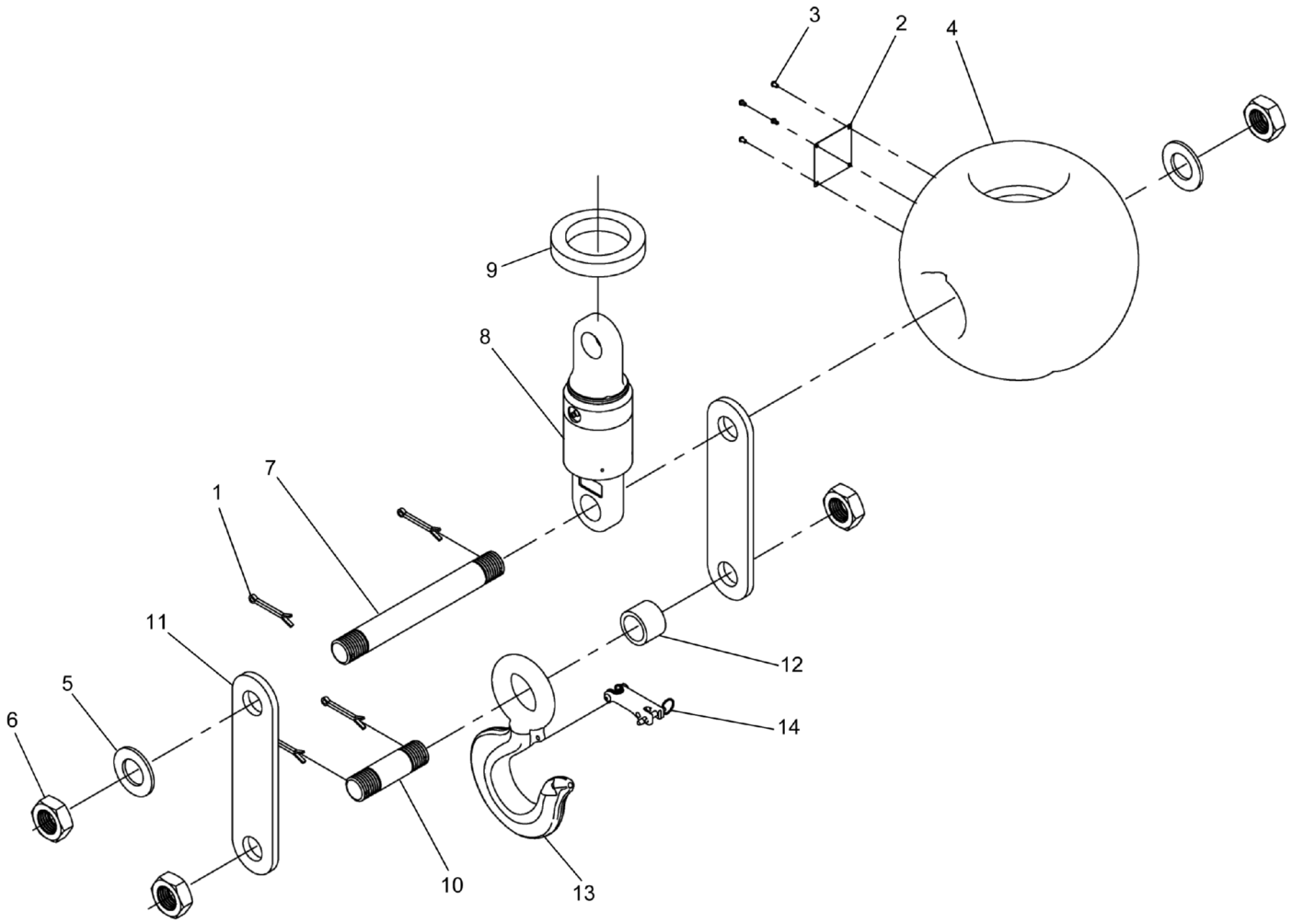

WHEN ORDERING PARTS, SPECIFY MODEL NUMBER, SERIAL NUMBER AND DESCRIPTION OF PARTS REQUIRED

LOAD KING BY CUSTOM TRUCK 1 SOURCE	**LOAD BALL, 7 TON**	DATE: Released 01-2013	**CHAPTER**
		MODEL: 28-106	**1**
		PAGE: 66	

REF	PART NO.	DESCRIPTION	QTY
	861-60090 (Rev. 00)	*Hook Ball 7 Ton Swivel*	
1	215388	Pin Cotter 0.19ODX1.75LG	4
2	216954	Name Plate	1
3	216955	Screw DR RD0.14ODX0.25 LGNC CD	4
4	225014	OHB 150 Ball	1
5	215386	Washer 11/4	2
6	215387	-7 Nut J 11/4	4
7	225016	Pin Latch 1.25ODX10.4LG OHB	1
8	215382	7EE	1
9	216951	7EE200C Ring	1
10	215389	Pin Latch 1.25ODX4.38LG	1
11	215393	OHB ADP B 3/8	2
12	215392	SPR 1.75ODX1.31IDX1.25LG	1
13	215391	7Eye HK A 7	1
14	219129*	A-7J Latch Kit STL	1

* WHEN ORDERING REPLACEMENT HOOK LATCH KIT SPECIFY PN: 215390

WHEN ORDERING PARTS, SPECIFY MODEL NUMBER, SERIAL NUMBER AND DESCRIPTION OF PARTS REQUIRED

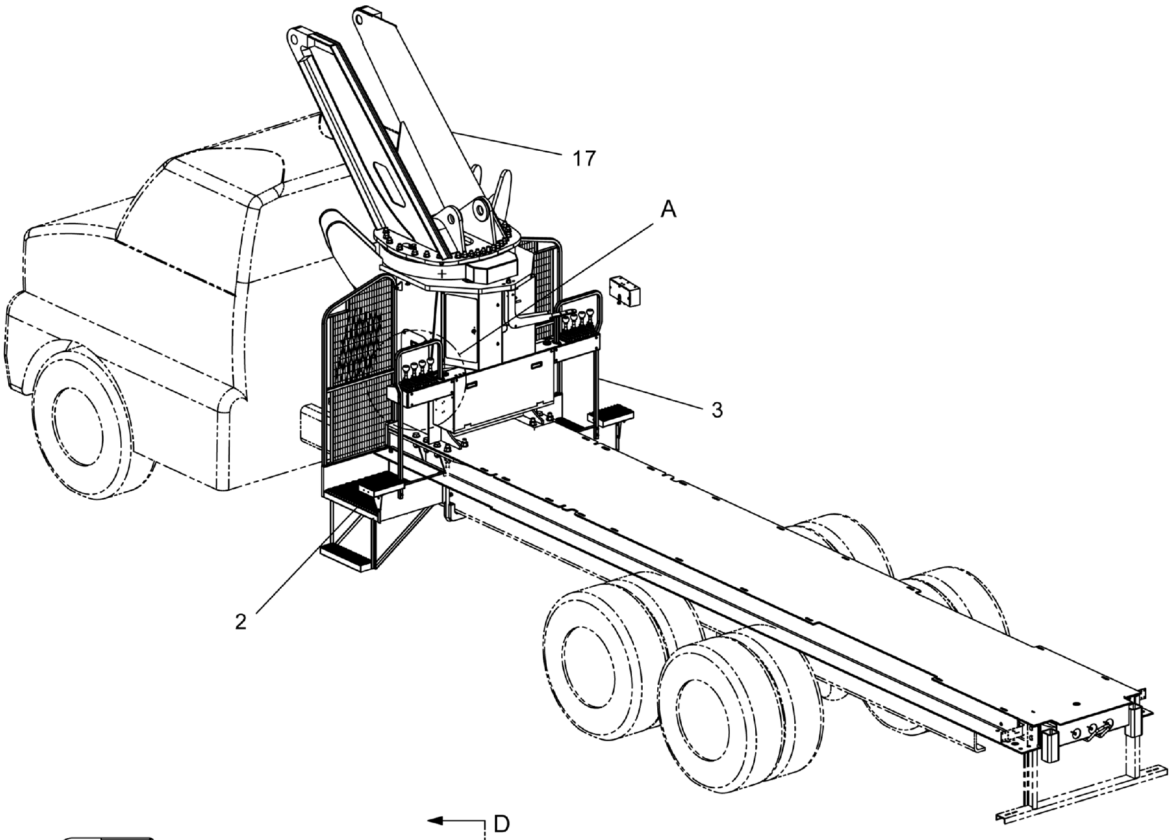

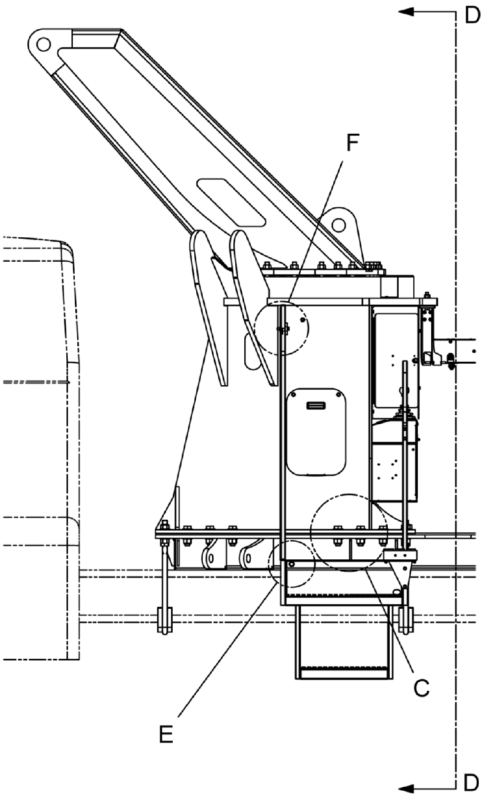

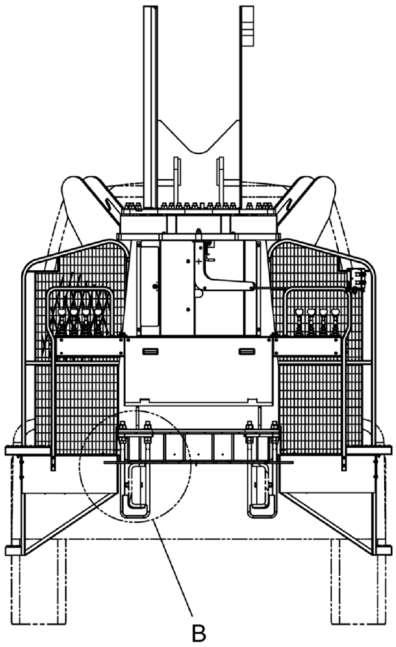

SECTION D - D

WHEN ORDERING PARTS, SPECIFY MODEL NUMBER, SERIAL NUMBER AND DESCRIPTION OF PARTS REQUIRED

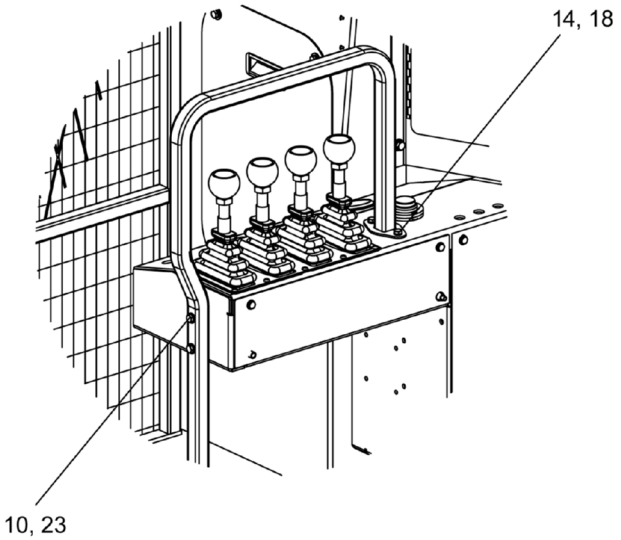

DETAIL A

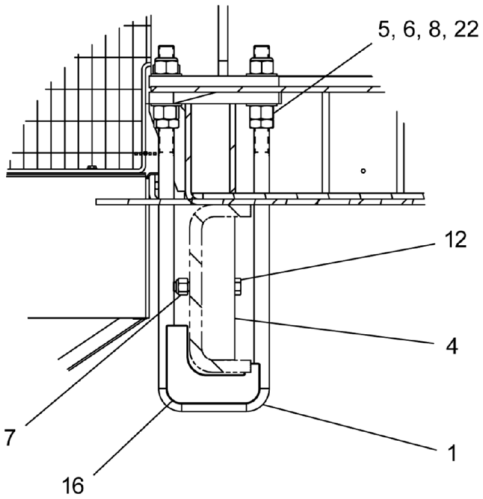

DETAIL B

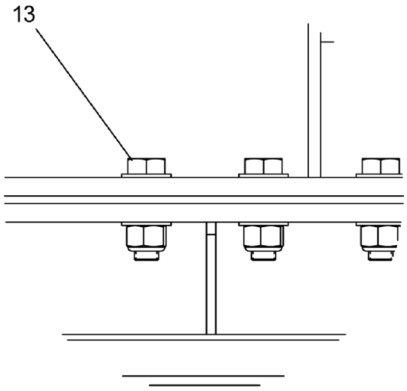

DETAIL C

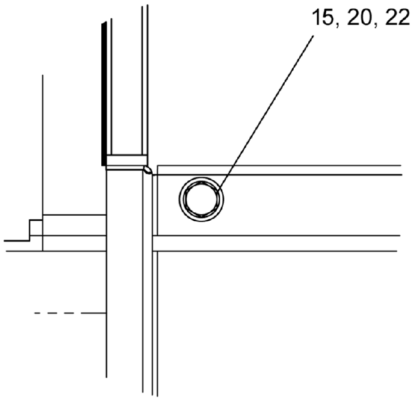

DETAIL E

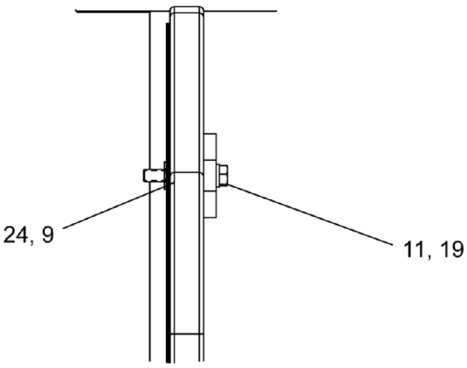

DETAIL F

REF	PART NO.	DESCRIPTION	QTY
	T119102 (Rev. D)	*Mainframe-Installation*	
1	220-99066	U-Bolt, Square Bottom	4
2	695-10026-1	Plat Form U.S Street Side	1
3	695-10026-2	Plat Form U.S. Curb Side	1
4	709-01902-2	Frame Reinforcement	4
5	N04-A00C000-Y8	Nut, HEX 1.00-8, ST SQC G8	8
6	N05-A00C000-Y8	Nut, HEX Jam 1.00-8, ST SQC G8	8
7	NYL-625C000-25	Nut, HEX NYL-INS 0.625-11, ST SQC G5	4
8	NYL-A00C000-Y8	Nut, HX NYL-INS 1.00-8, ST SQC G8	20
9	NYT-375C000-22	Nut, NYLK HVYTHN 0.375-16, ST SQC G2	2
10	S01-250CA75-25	SCR, HHCS 0.25-20 X 1.75, ST SQC G5	4
11	S01-375CB25-25	SCR, HHCS 0.375 X -16X2.25, ST Z GR5	2
12	S01-625CD00-25	SCR, HHCS 0.625-11 X 4.00, ST SQC G5	4
13	S01-A00CC50-Y8	SCR, HHCS 1.00-8 X 3.50, ST SQC G8	12
14	SHF-250C625-25	SCR, HHCS FT 0.25-20 X 0.625, ST SQC G5	4
15	SHF-500CA00-Y8	SCR, HHCS FT 0.50-13 X 1.00, ST SQC G8	4
16	T107283	ASSY-U Bolt Saddle	4
17	**T127996**	Mainframe-Console ASSY (see page 71)	1
18	W07-250X000-20	Washer, LCK, MED SPLT 0.25, ST SQC	4
19	W07-375X000-20	WSH, LCK, MED SPLT 0.375, ST Z	2
20	W07-500X000-20	WSH, LCK, MED SPLT 0.50, ST Z	4
21*	WAH-50NX000-20	WSH, FL HRD A-NRW 0.50, ST SQC	4
22	WAH-A0NX000-20	WSH, FL HRD A-NRW 1.00, ST SQC	40
23	WAN-25NX000-20	WSH, FL TYPA-NRW 0.25, ST Z	4
24	WAN-37NX000-20	WSH, FL TYPA-NRW 0.375, ST Z	2

* ITEM NOT SHOWN IN ILLUSTRATION

WHEN ORDERING PARTS, SPECIFY MODEL NUMBER, SERIAL NUMBER AND DESCRIPTION OF PARTS REQUIRED

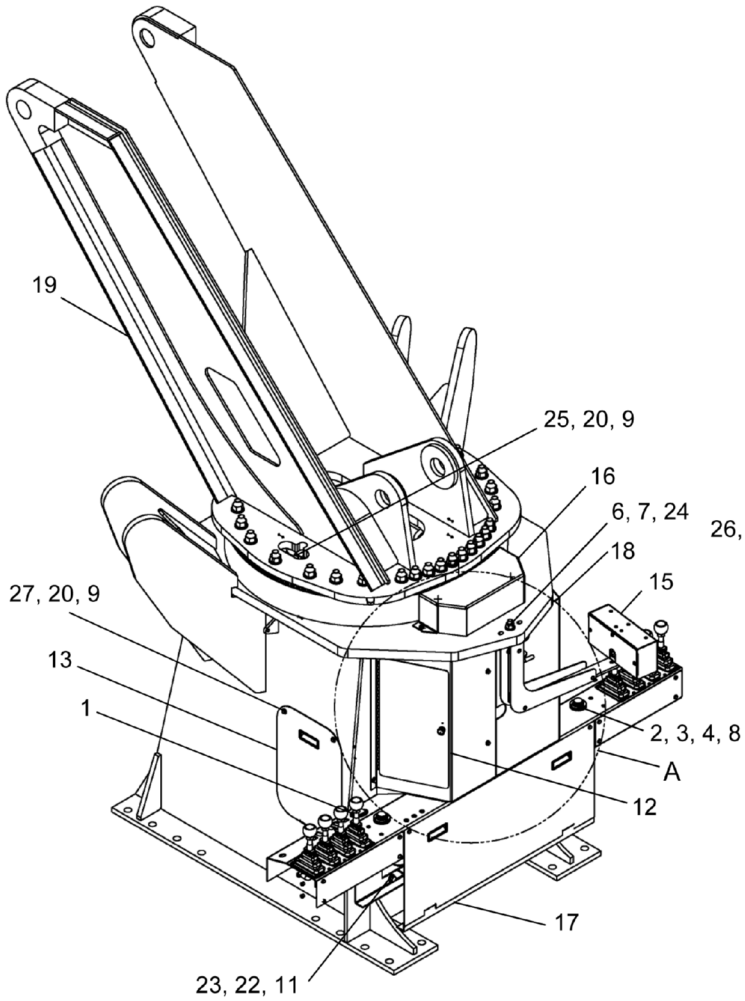

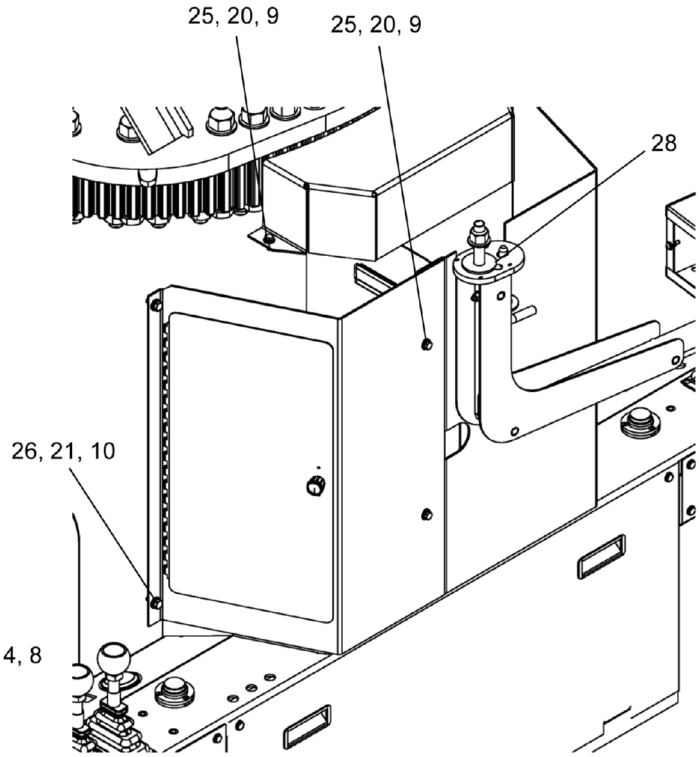

DETAIL A

WHEN ORDERING PARTS, SPECIFY MODEL NUMBER, SERIAL NUMBER AND DESCRIPTION OF PARTS REQUIRED

REF	PART NO.	DESCRIPTION	QTY
	T127996 (Rev. B)	*Mainframe-Console ASSY*	
1	1245-162	Meter, Hour	1
2	209-00831	BRKT, Bubble Level Mounting	2
3	209-00832	Bubble Level	2
4	263-00044	Gasket-Level Mounting	2
5*	**400-25211**	Assembly Console (see page 73)	1
6	NYL-625C000-25	Nut, HEX NYL-INS 0.625-11, ST SQC G5	1
7	S01-625CC25-Y8	SCR, HHCS 0.625-11X3.25, ST YZ G8	1
8	S16-164C750-20	SCR, FHSHCS 08-32X0.75, ST Z	6
9	SHF-250C750-25	SCR, HHCS, 0.25-20 X 0.75, ST SQC G5	9
10	SHF-312C750-25	SCR, HHCS FT 0.312-18 X 0.75, ST SQC G5	4
11	SHF-500C750-25	SCR, HHCS FT 0.50-13X0.75, ST Z G5	4
12	**T105984**	Half Cover W/Door ASSY (see page 75)	1
13	**T110469**	ASSY, Main Frame Access CVR (see page 76)	2
14*	**T121153**	ASSY, Mainframe Electrical (see page 77)	1
15	**T121960**	ASSY, Pivot Arm-Switch Box (see page 79)	1
16	T121982	Cover, Pinion	1
17	**T127087**	Control Console ASSY (see page 82)	1
18	T127994	Cover ASSY, Swing Motor	1
19	**T128064**	Mainframe -Turret Assembly (see page 88)	1
20	W07-250X000-20	Washer, LCK, MED SPLT 0.25, ST SQC	9
21	W07-312X000-20	WSH, LCK, MED SPLT 0.3125, ST SQC	4
22	W07-500X000-20	WSH, LCK, MED SPLT 0.50, ST Z	4
23	WAH-50NX000-Y2	WSH, FL HRD A-NRW 0.50, ST YZ	4
24	WAH-62NX000-Y2	WSH, FL HRD A-NRW 0.625, ST YZ	1
25	WAN-25NX000-20	WSH, FL TYPA-NRW 0.25, ST Z	5
26	WAN-31NX000-20	WSH, FL TYPA-NRW 0.3125, ST SQC	4
27	WBR-25RX734-20	Washer, FL TYPB-REG 0.25, ST SQC	4
28	WFT-625XB00-20	WSH, FNDR 0.625X2.00X0.125, ST Z	1

* ITEM NOT SHOWN IN ILLUSTRATION

WHEN ORDERING PARTS, SPECIFY MODEL NUMBER, SERIAL NUMBER AND DESCRIPTION OF PARTS REQUIRED

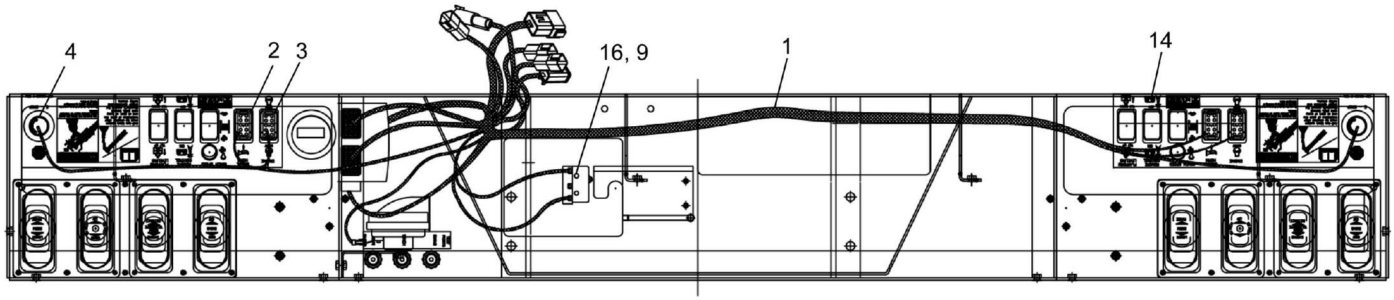
4
2
3
16, 9
1
14

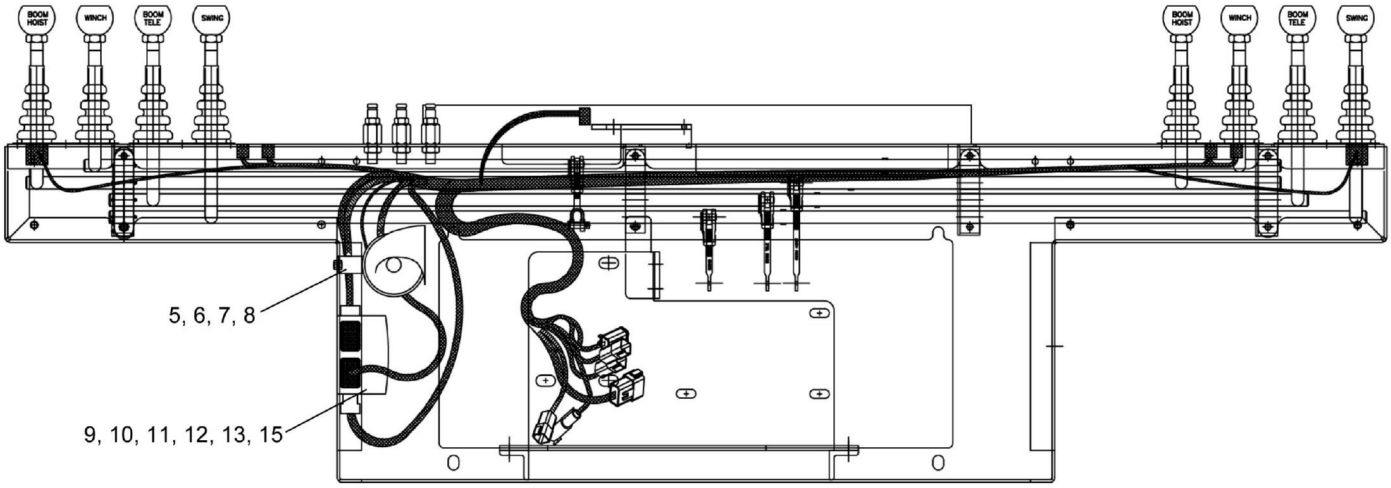
BOOM HOIST
WINCH
BOOM TELE
SWING
5, 6, 7, 8
9, 10, 11, 12, 13, 15

REF	PART NO.	DESCRIPTION	QTY
	400-25211 (Rev. F)	*Assembly Console*	
1	400 25195	Harness Console BT-2	1
2	1223-1081	SW Rocker MOM On-Off	2
3	1223-1051	SW Rocker DPDT	2
4	1223-981	SW Push-Pull	2
5	1223-387	Horn	1
6	220-01047-13	HHCS 5/16-18 X 1 GR5 Zinc	1
7	222-00025-7	Flat Washer 5/16 Zinc	1
8	221-00032-2	Nylon Lock HEX Nut 3/8-16 Zinc	1
9	220-00067-9	Screw, 2-56 X 5/8	2
10	400-05509	Bussmann Fuse Box	1
11	220-00072-23	HHCS 10-24 X 1.5 GR5 Zinc	4
12	220-00025-4	Flat Washer #10 Zinc	8
13	221-00035-9	10-24 Machine Nut	4
14	1223-1006	Plug	8
15	222-00028-7	#10 Lock Washer	4
16	221-00032-22	Nut, 2-56 NYLOC	2

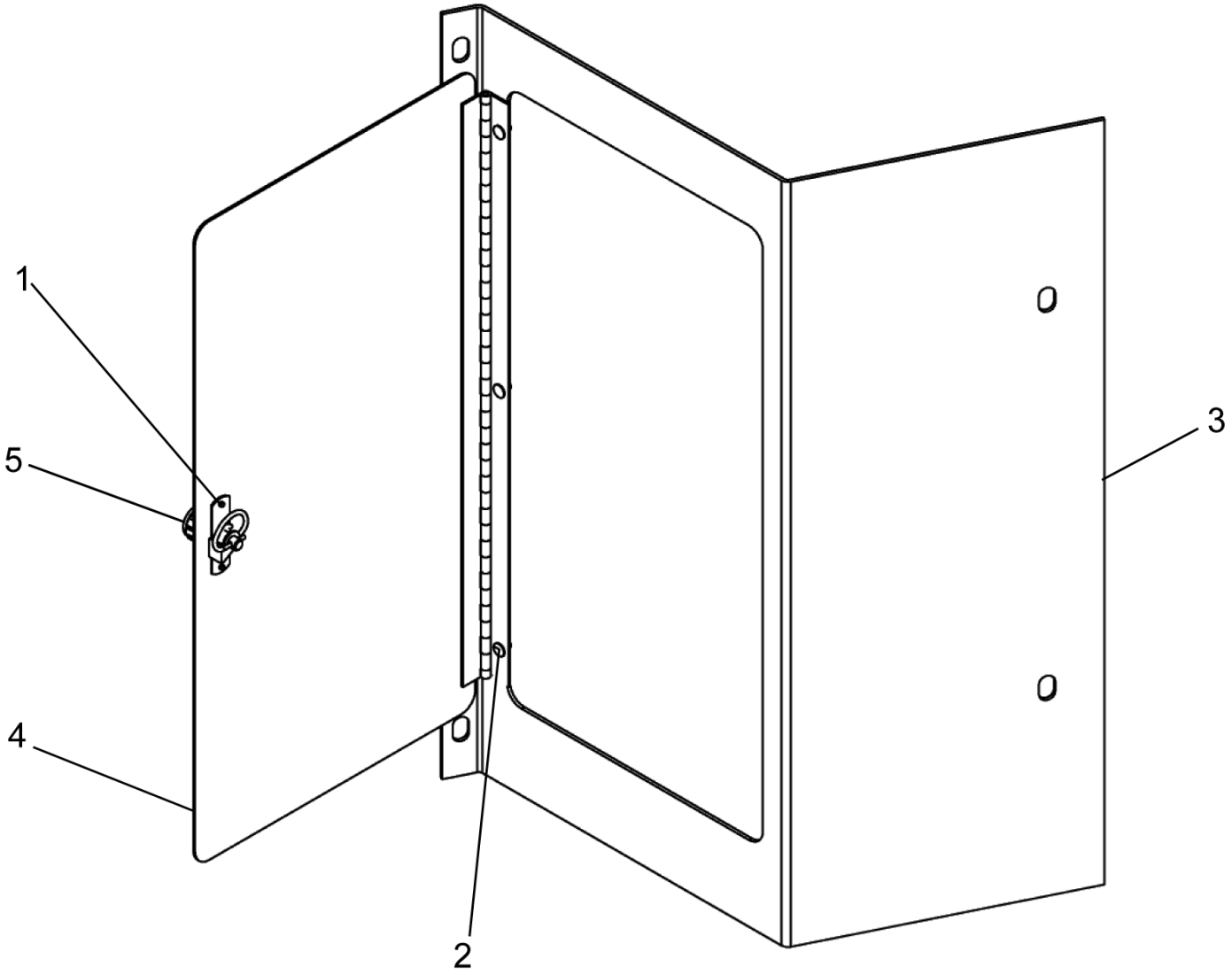

REF	PART NO.	DESCRIPTION	QTY
	T105984 (Rev. B)	*Half Cover W/Door ASSY*	
1	VBB-125X400-L5	RVT, BTNHD, BLND 0.125 X 0.400, AL	2
2	1212-52	Pop Rivet, 3/16 DIA	3
3	802-01688	Cover, Swing Motor	1
4	T105985	Cover Door Sub ASSY	1
5	T106194	Latch	1

WHEN ORDERING PARTS, SPECIFY MODEL NUMBER, SERIAL NUMBER AND DESCRIPTION OF PARTS REQUIRED

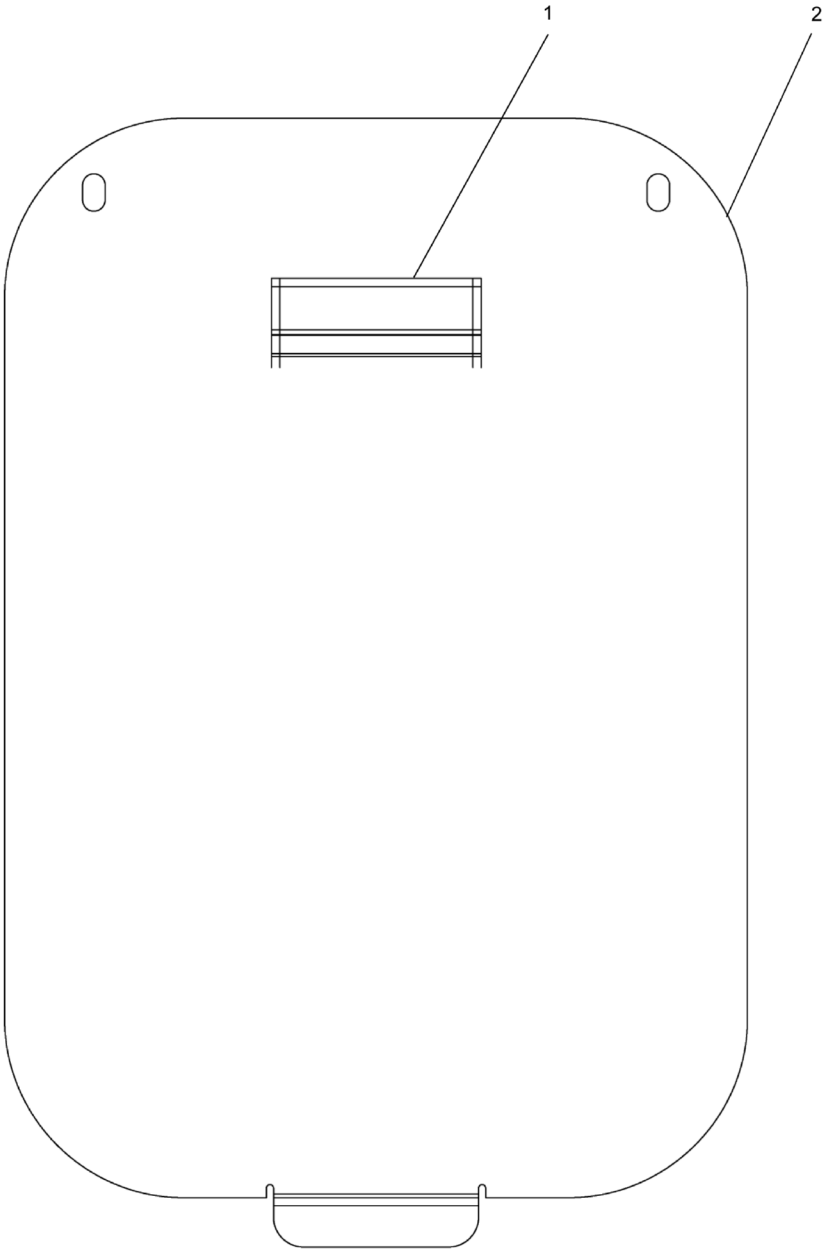

REF	PART NO.	DESCRIPTION	QTY
	T110469 (Rev. A)	*ASSY, Main Frame Access CVR*	
1	809-00514-3	Handle	1
2	802-01682	Mainframe Access Cover	1

WHEN ORDERING PARTS, SPECIFY MODEL NUMBER, SERIAL NUMBER AND DESCRIPTION OF PARTS REQUIRED

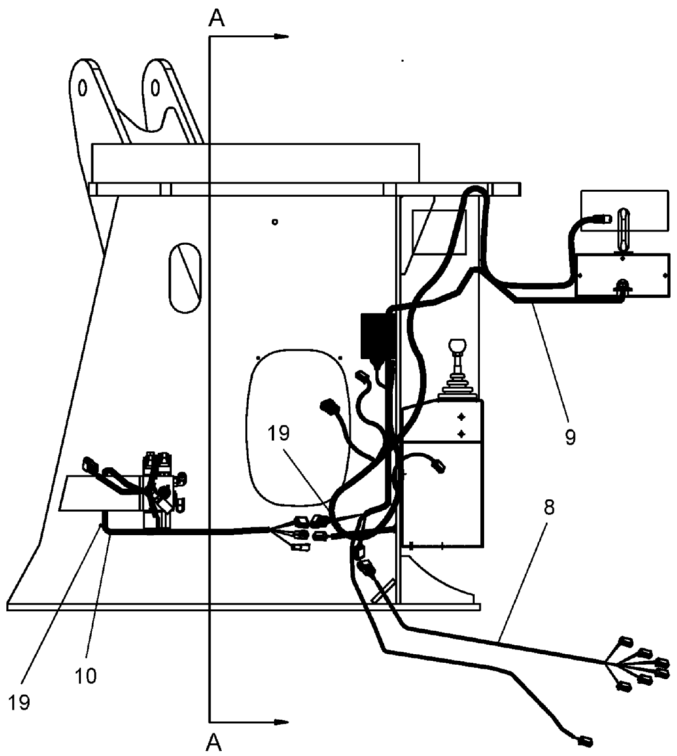

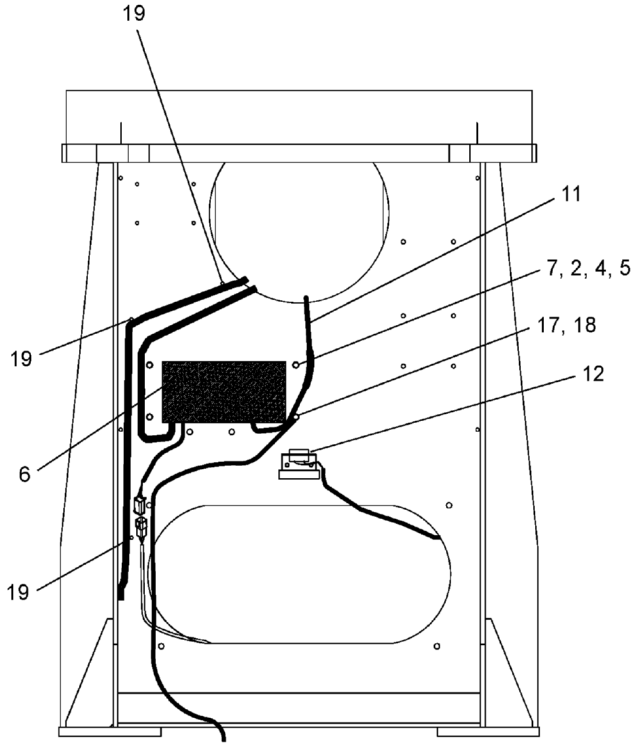

VIEW A - A

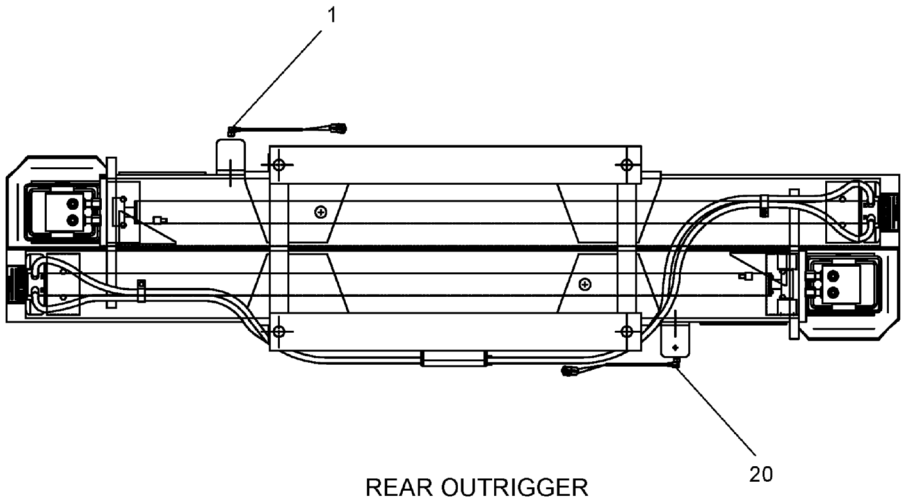

REAR OUTRIGGER

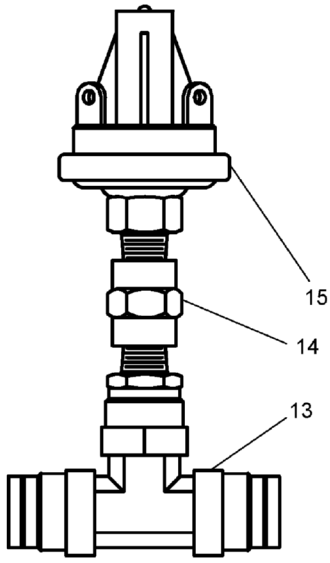

WHEN ORDERING PARTS, SPECIFY MODEL NUMBER, SERIAL NUMBER AND DESCRIPTION OF PARTS REQUIRED

REF	PART NO.	DESCRIPTION	QTY
	T121153 (Rev. C)	*ASSY, Mainframe Electrical*	
1	T121222	Harness, AUX SS. O/R Sensor	1
2	SHF-250C750-25	SCR, HHCS, 0.25-20 X 0.75, ST SQC G5	3
3*	220-00073-11	RHMS #10-32 X .75 PH Head	2
4	W07-250X000-20	Washer, LCK, MED SPLT 0.25, ST SQC	3
5	WAW-25WX000-20	WSH, FL TYPA-WID 0.25, ST Z	3
6	T132578	Greer Controller	1
7	400-01530	Cable ASSY (Ground)	1
8	T121419	Harness, Rear Outrigger	1
9	T121416	Harness, Outrigger	1
10	400-25199	Harness, Main Valve	1
11	400-16139	ELEC Cable, Greer WAD 32' Long	1
12	450-0006	Alarm	1
13	570-50096	Tee Branch Swivel	1
14	1219-134	Coupling, P Brake ASSY	1
15	1223-379	Switch Air	1
17	SHF-250CA00-25	SCR, HHCS FT 0.25-20X1.00, ST Z G5	1
18	NYL-250C00-25	Locknut, 1/4-20 UNC PLT	1
19	T109073	ZIP Tie, Stud Mount	5
20	T121221	Harness, AUX C.S. O/R Sensor	1

* ITEM NOT SHOWN IN ILLUSTRATION

WHEN ORDERING PARTS, SPECIFY MODEL NUMBER, SERIAL NUMBER AND DESCRIPTION OF PARTS REQUIRED

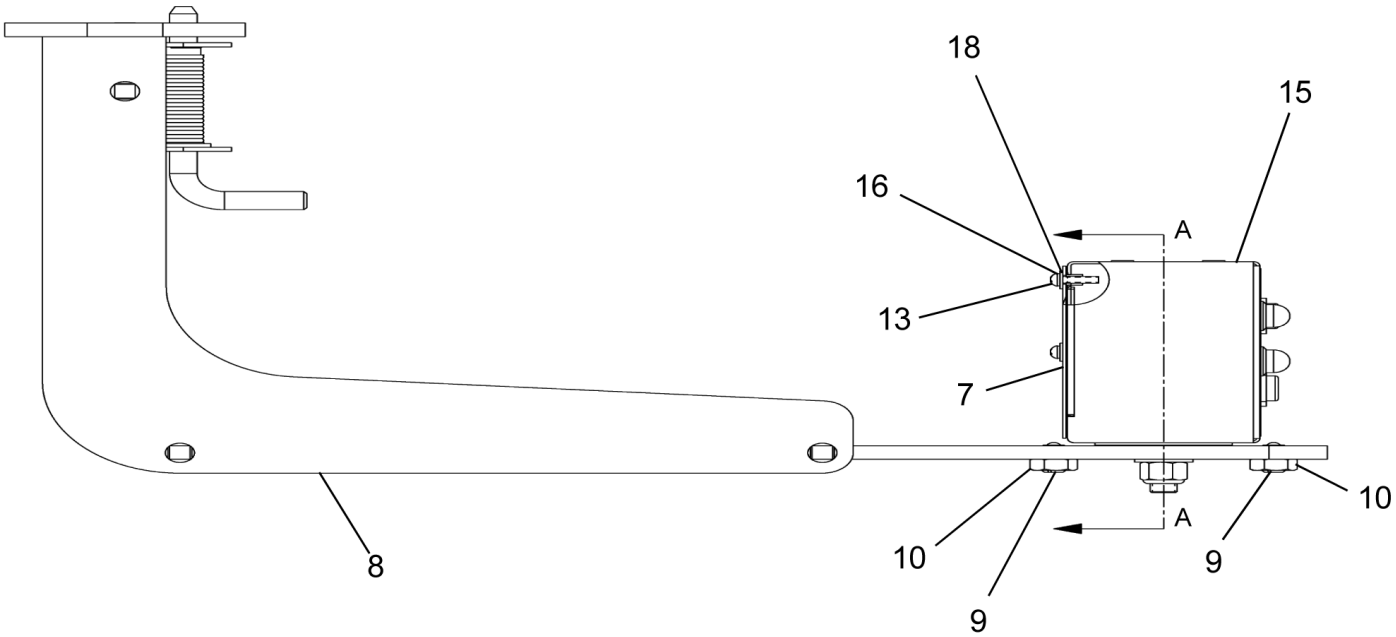

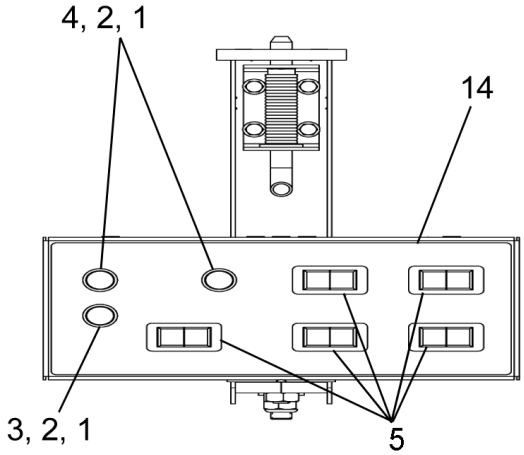

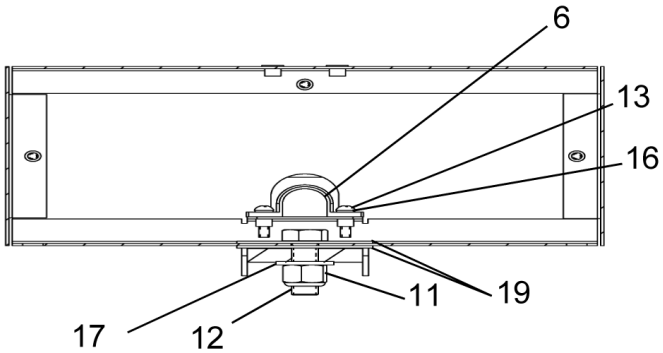

SECTION A-A

WHEN ORDERING PARTS, SPECIFY MODEL NUMBER, SERIAL NUMBER AND DESCRIPTION OF PARTS REQUIRED

LOAD KING BY CUSTOM TRUCK 1 SOURCE	**PIVOT ARM-SWITCH BOX ASSEMBLY**	DATE: Revised 05-2016	**CHAPTER**
		MODEL: 28-106	**1**
		PAGE: 79	

REF	PART NO.	DESCRIPTION	QTY
	T121960 (Rev. B)	*ASSY, Pivot Arm-Switch Box*	
1	1223-1020	Socket	3
2	1223-1021	Lamp 12 V	3
3	1223-1022	Lens Red	1
4	1223-1023	Lens Green	2
5	1223-1051	SW Rocker DPDT	5
6	201-00264	Strap, Rigid Plastic	1
7	402-00047	Cover, Switch Box, Outrigger	1
8	770-02822	Swing ARM Weldment	1
9	870-00173-5	Ball, Spring Plunger	2
10	N05-500C000-25	Nut, HEX Jam 0.50-13, ST Z GR5	2
11	NYL-500C000-25	Nut, HEX NYL - INS 0.50-13, ST Z G5	1
12	SHF-500CA50-25	SCR, HHCS FT 0.50-13 X 1.50, ST SQC G5	1
13	SL5-190C750-20	SCR, CREC RND MS 10-24X0.75,ST Z	5
14	T121822	Decal, O/R Controls A-FRM-O&D	1
15	**T121958**	Outrigger Switch Box Assembly (see page 81)	1
16	W07-190X000-20	WSH, LCK, MED SPLT 10, ST Z	5
17	WAN-50NX000-20	WSH, FL TYPA-NRW 0.50, ST Z	1
18	WAR-190X000-22	WSH, FL TYPA-REG 10, ST Z	3
19	WFD-500XB50-20	WSH, FNDR 0.50X2.50, ST Z	2

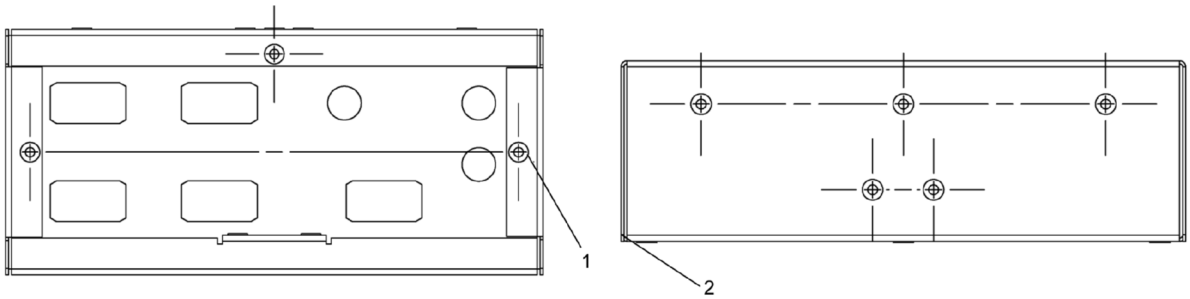

REF	PART NO.	DESCRIPTION	QTY
	T121958 (Rev. B)	*Outrigger Switch Box Assembly*	
1	T11-190C000-CD	Thread - SERT 10-24, ST CAD	10
2	T121959	Switch Box, Outriggers	1

WHEN ORDERING PARTS, SPECIFY MODEL NUMBER, SERIAL NUMBER AND DESCRIPTION OF PARTS REQUIRED

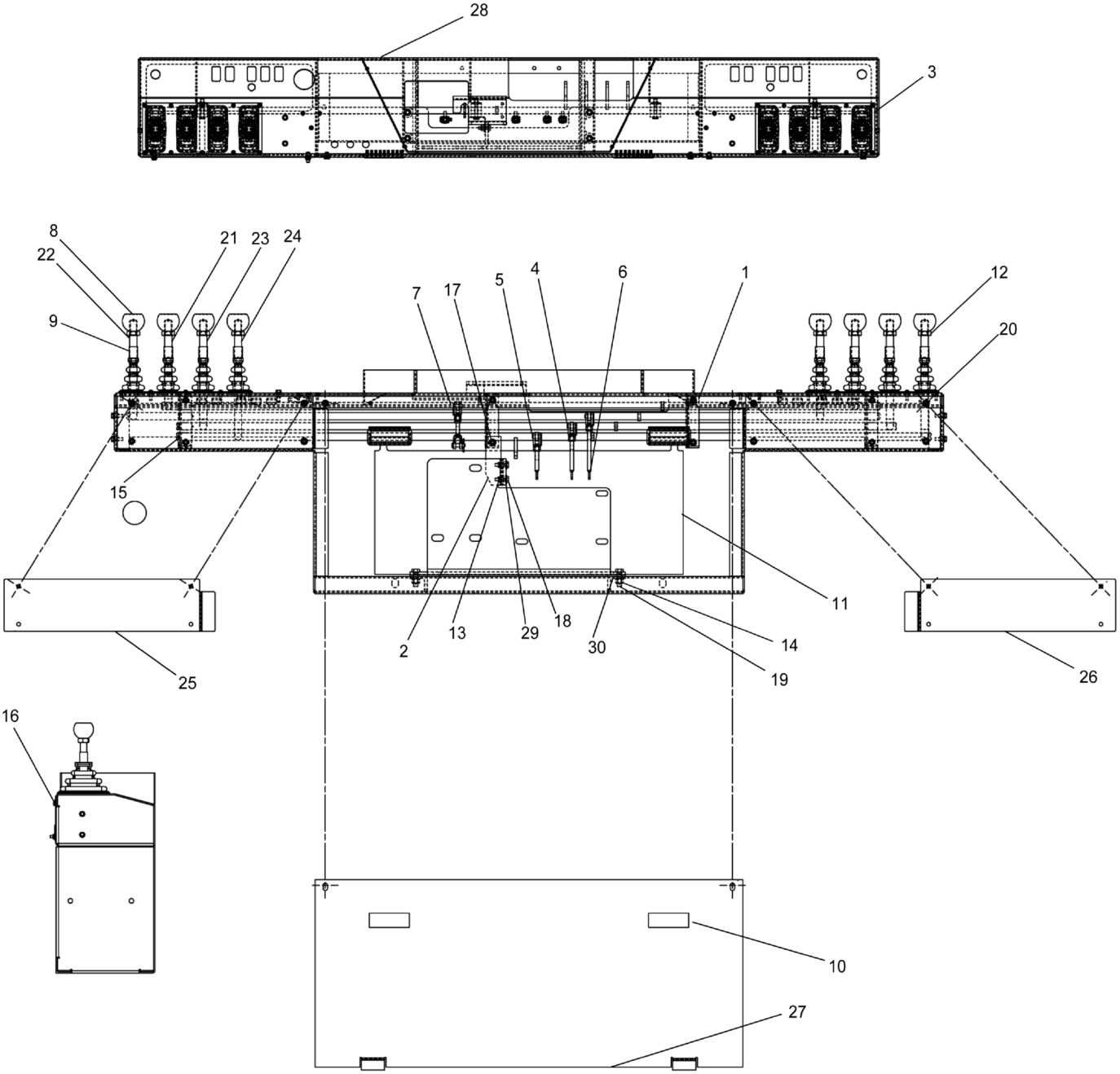

WHEN ORDERING PARTS, SPECIFY MODEL NUMBER, SERIAL NUMBER AND DESCRIPTION OF PARTS REQUIRED

REF	PART NO.	DESCRIPTION	QTY
	T127087 (Rev. B)	*Control Console ASSY*	
1	709-01858	Bearing Block- Control Handle	8
2	789-05882	BRKT, BLABE MTG. Lever Support	1
3	789-05883	Boot Hold Down Plate	2
4	**806-00267**	Control Link ASSY, Boom Tele (see page 84)	1
5	**806-00268**	Control Link ASSY, Swing (see page 85)	1
6	**806-00269**	Control Link ASSY, Boom Hoist (see page 86)	1
7	**806-00272**	Console Link ASSY Winch (see page 87)	1
8	808-00048	DIMCO Part # 1-274- 070	8
9	809-00501	Shift Boot, PVC Molded	4
10	809-00514-3	Handle	2
11	809-00520	BRKT, Valve MTG	1
12	N05-625C000-25	Nut, HEX JAM 0.625 -11, ST Z GR5	8
13	NYL-250C000-25	Nut, HEX NYL-INS 0.25-20, ST SQC G5	2
14	NYL-375C000-25	Nut, HEX NYL-INS 0.375-16, ST Z G5	4
15	P22-125XA00-GP	Pin, Spring SLTD 0.125X1.00, ST	8
16	SFL-250C500-B8	SCR, HEX FLNG 0.25-20X 0.50, GR8	10
17	SFL-250CA75-B8	SCR, HEX FLNG 0.25-20X1.75, GR8	8
18	SHF-250CA00-25	SCR, HHCS FT 0.25-20X1.00, ST Z G5	2
19	SHF-375CA25-25	SCR, HHCS FT 0.375-16X1.25, ST SQC G5	4
20	SL5-190C750-20	SCR, CREC RND MS 10-24X0.75,ST Z	20
21	T127068	Control Handle, Winch	1
22	T127069	Control Handle, Boom Hoist	1
23	T127070	Control Handle, Boom Tele	1
24	T127071	Control Handle, Swing	1
25	T127115	Console Cover, S.S. End	1
26	T127116	Console Cover, C.S. End	1
27	T127117	Console Cover, Center Section	1
28	T130477	Console ASSY	1
29	WBR-25RX734-20	Washer, FL TYPB-REG 0.25, ST SQC	4
30	WBR-37RXA00-20	WSH, FL TYPB-REG 0.375, ST Z	4

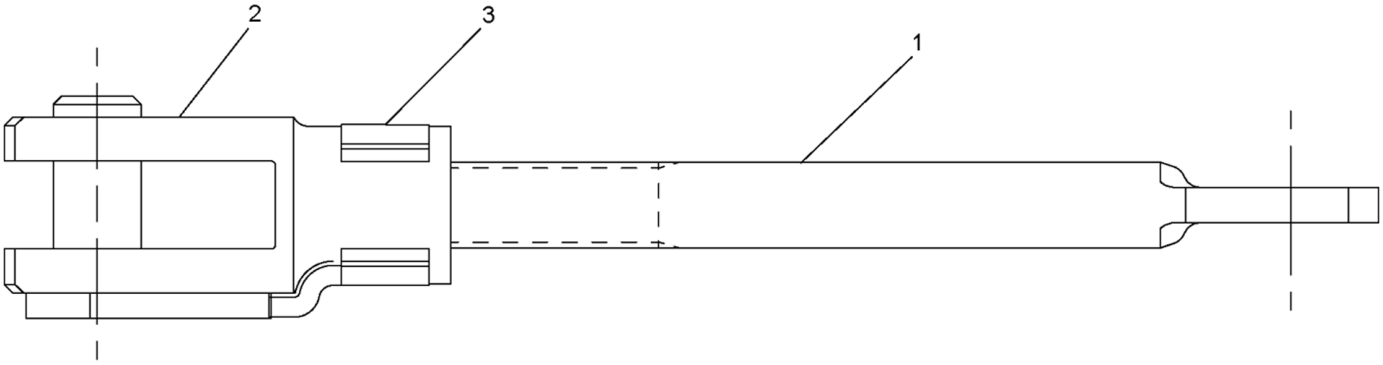

REF	PART NO.	DESCRIPTION	QTY
	806-00267 (Rev. 00)	*Control Link ASSY, Boom Tele*	
1	806-00270-2	Control Link Rod 5/16-24X3.50	1
2	809-00510	Clevis Fork 0.3125	1
3	809-00511	Clevis Bracket Weldment 0.3125	1

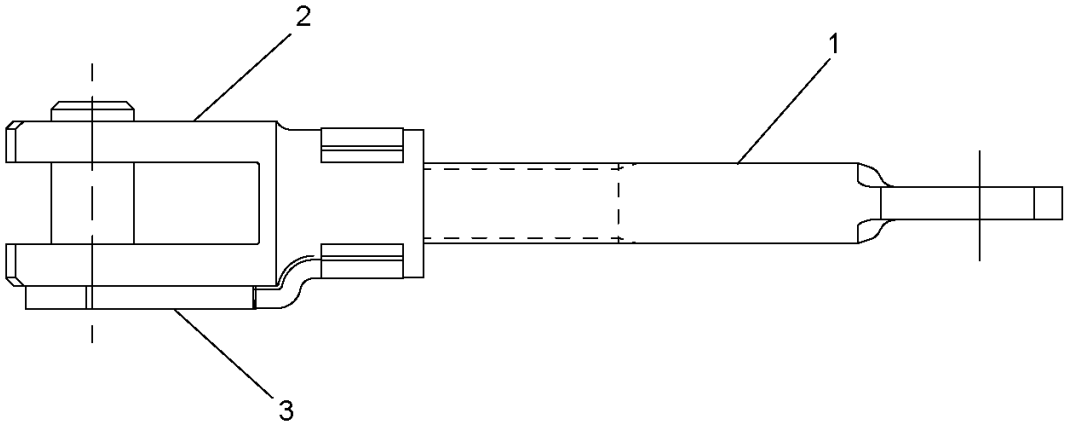

REF	PART NO.	DESCRIPTION	QTY
	806-00268 (Rev. 00)	*Control Link ASSY, Swing*	
1	806-00270-1	Control Link Rod 5/16-24X2.63 Zinc	1
2	809-00510	Clevis Fork 0.3125	1
3	809-00511	Clevis Bracket Weldment 0.3125	1

WHEN ORDERING PARTS, SPECIFY MODEL NUMBER, SERIAL NUMBER AND DESCRIPTION OF PARTS REQUIRED

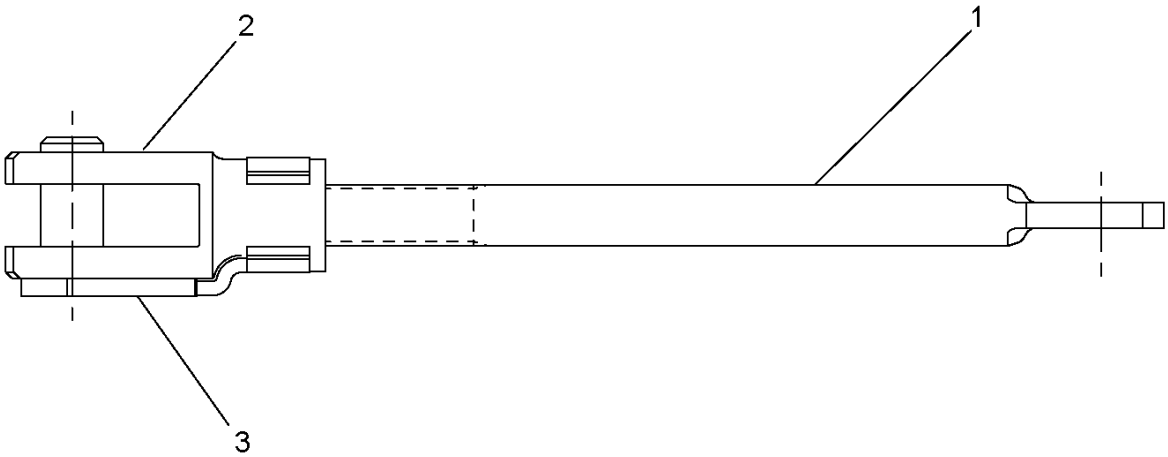

REF	PART NO.	DESCRIPTION	QTY
	806-00269 (Rev. 00)	*Control Link ASSY, Boom Hoist*	
1	806-00270-3	Control Link Rod 0.3125-24X4.00	1
2	809-00510	Clevis Fork 0.3125	1
3	809-00511	Clevis Bracket Weldment 0.3125	1

WHEN ORDERING PARTS, SPECIFY MODEL NUMBER, SERIAL NUMBER AND DESCRIPTION OF PARTS REQUIRED

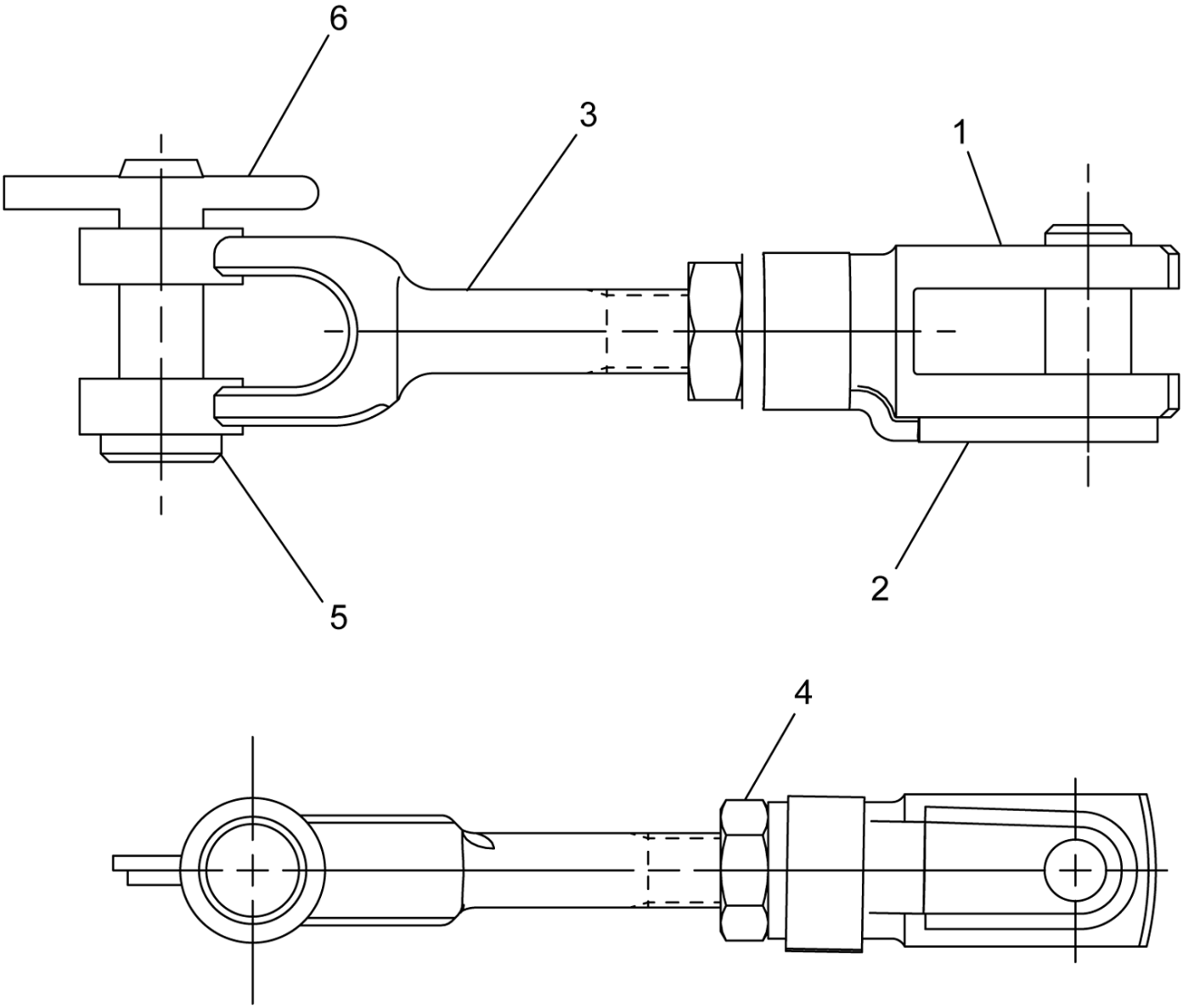

REF	PART NO.	DESCRIPTION	QTY
	806-00272 (Rev. B)	*Console Link ASSY Winch*	
1	809-00510	Clevis Fork 0.3125	1
2	809-00511	Clevis Bracket Weldment 0.3125	1
3	809-00516	Clevis, Male Yoke 5/16-24X1.63	1
4	N05-312F000-25	Nut, HEX Jam 0.3125-24, ST SQC G5	1
5	P01-312XA00-P0	Pin, Clevis 0.3125 X 1.00, STL	1
6	P02-125X750-20	Pin, Cotter 0.125 X 0.75, ST SQC	1

WHEN ORDERING PARTS, SPECIFY MODEL NUMBER, SERIAL NUMBER AND DESCRIPTION OF PARTS REQUIRED

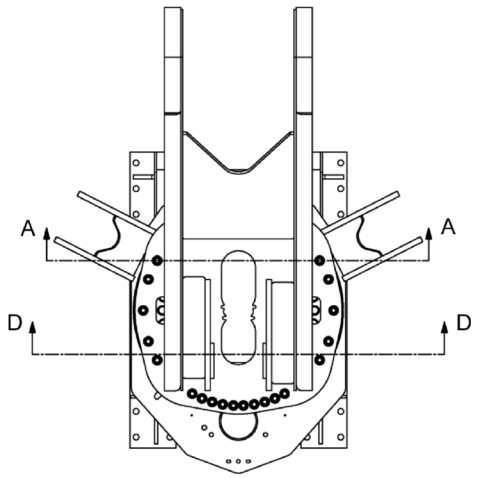

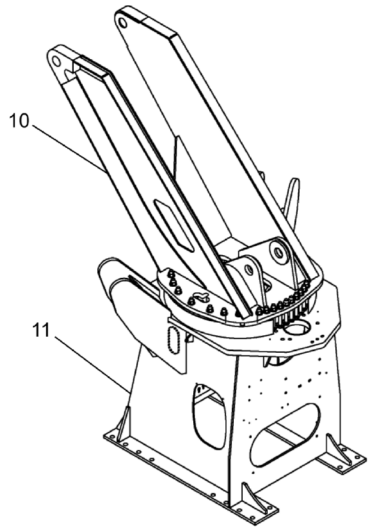

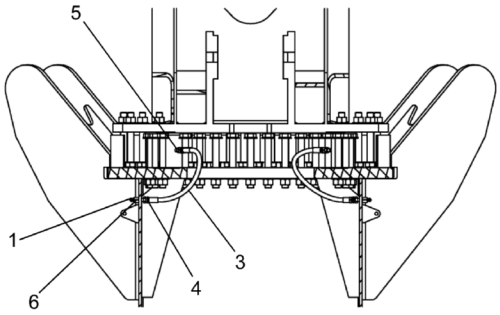

SECTION D-D

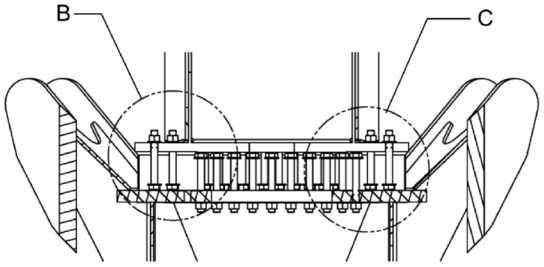

SECTION A-A

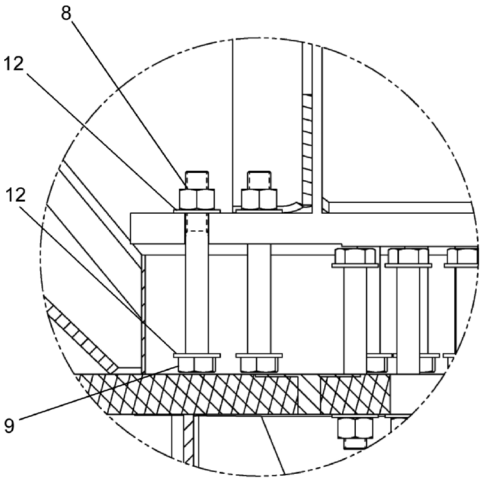

DETAIL B

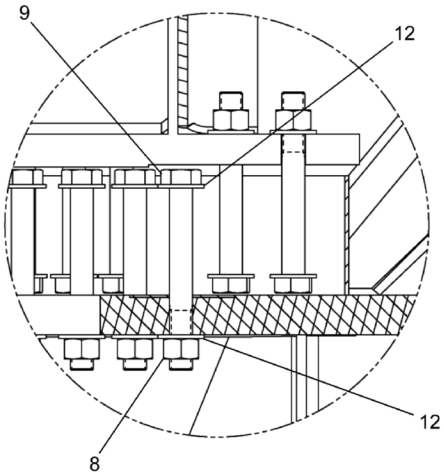

DETAIL C

WHEN ORDERING PARTS, SPECIFY MODEL NUMBER, SERIAL NUMBER AND DESCRIPTION OF PARTS REQUIRED

REF	PART NO.	DESCRIPTION	QTY
	T128064 (Rev. A)	*Mainframe -Turret Assembly*	
1	1213-06	Grease FTG, ZERK, 0.125NPT 90°	2
2*	12169-1	Flex Trim 3/8" X 18" Long	1
3	502-00191	Grease Line Hose, BRG	2
4	511-21001	Jam Nut (TMPKNS 306-04)	2
5	513-20029	STR CONN M#4 OFS X M#4 ORB	2
6	518-20001	CONN BH F 0.125 NPT X M 0.25 JIC	2
7*	716-00035	Bearing, Rotation	1
8	N04-875C000-Y8	Nut, HEX 0.875-9, ST YZ GR8	69
9	S01-875CG00-Y8	SCR, HHCS O.875-9X7.00, ST YZ GR8	69
10	T107707	Turret Weldment	1
11	T127995	Mainframe Weldment	1
12	WAH-87NX000-Y2	WSH, FL HRD A-NRW 0.875, ST YZ	138

* ITEM NOT SHOWN IN ILLUSTRATION

WHEN ORDERING PARTS, SPECIFY MODEL NUMBER, SERIAL NUMBER AND DESCRIPTION OF PARTS REQUIRED

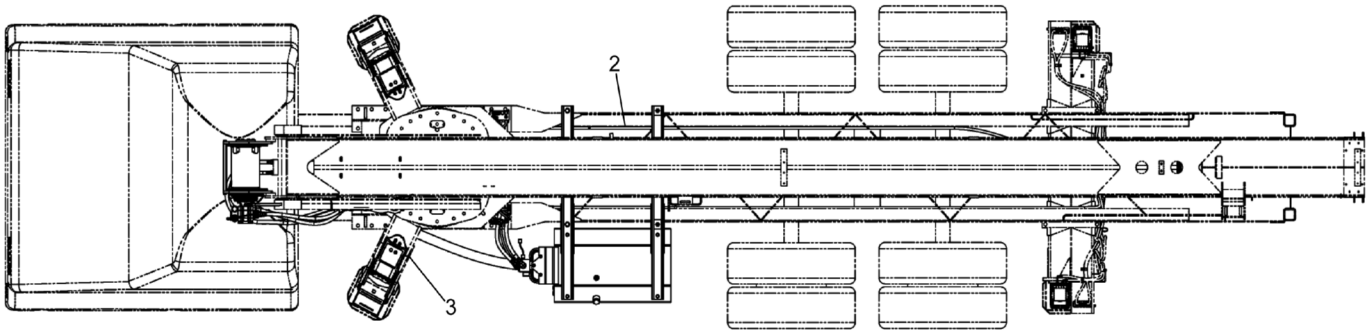
2
3

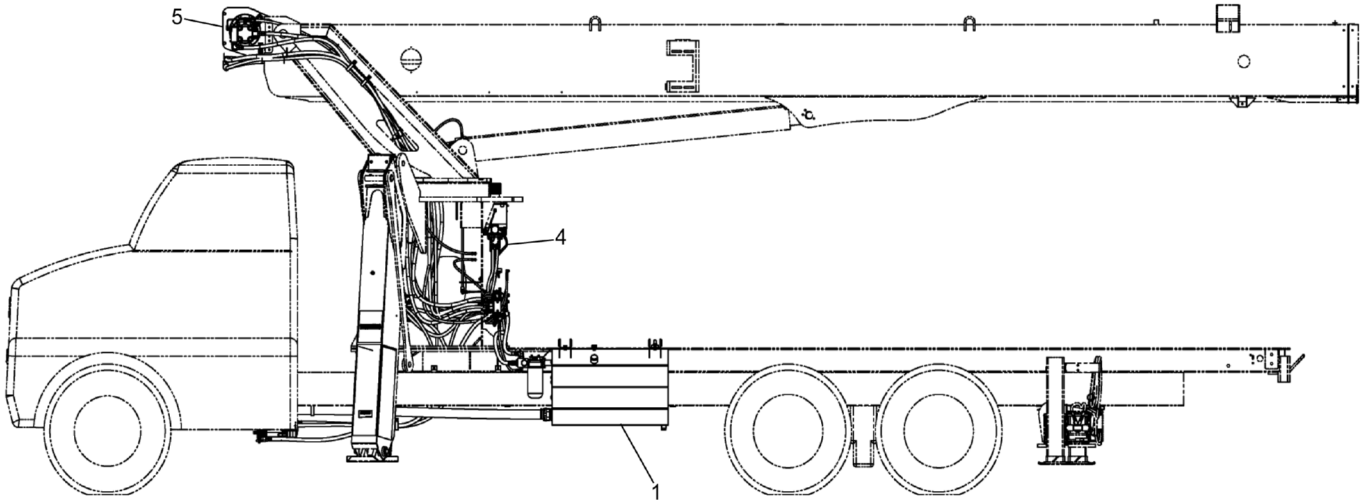
5
4
1

REF	PART NO.	DESCRIPTION	QTY
	T118784 (Rev. A)	*HYD INSTL, NONCON - CF WINCH*	
1	**500-01847-01**	Hydraulic Installation, Pump/Tank (see page 92)	1
2	**500-01848-01**	HYD INSTL, AUX Outrigger (see page 100)	1
3	**500-01849-01**	HYD INSTL, Main Outrigger (see page 102)	1
4	**T117824**	INSTL, Main-Console HYD (see page 105)	1
5	**T118030**	HYD INSTL, NONCON COMB Flow Winch (see page 123)	1

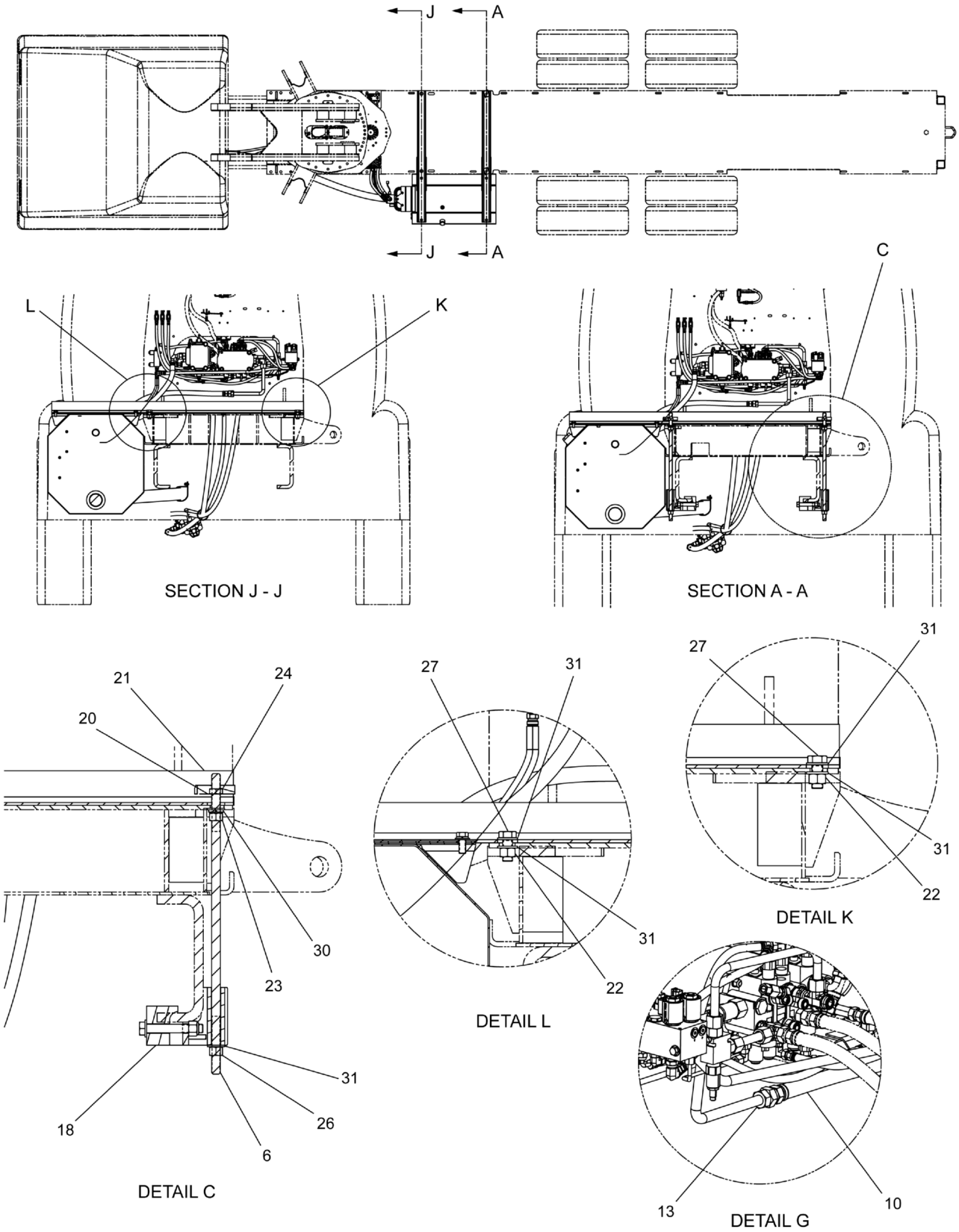

WHEN ORDERING PARTS, SPECIFY MODEL NUMBER, SERIAL NUMBER AND DESCRIPTION OF PARTS REQUIRED

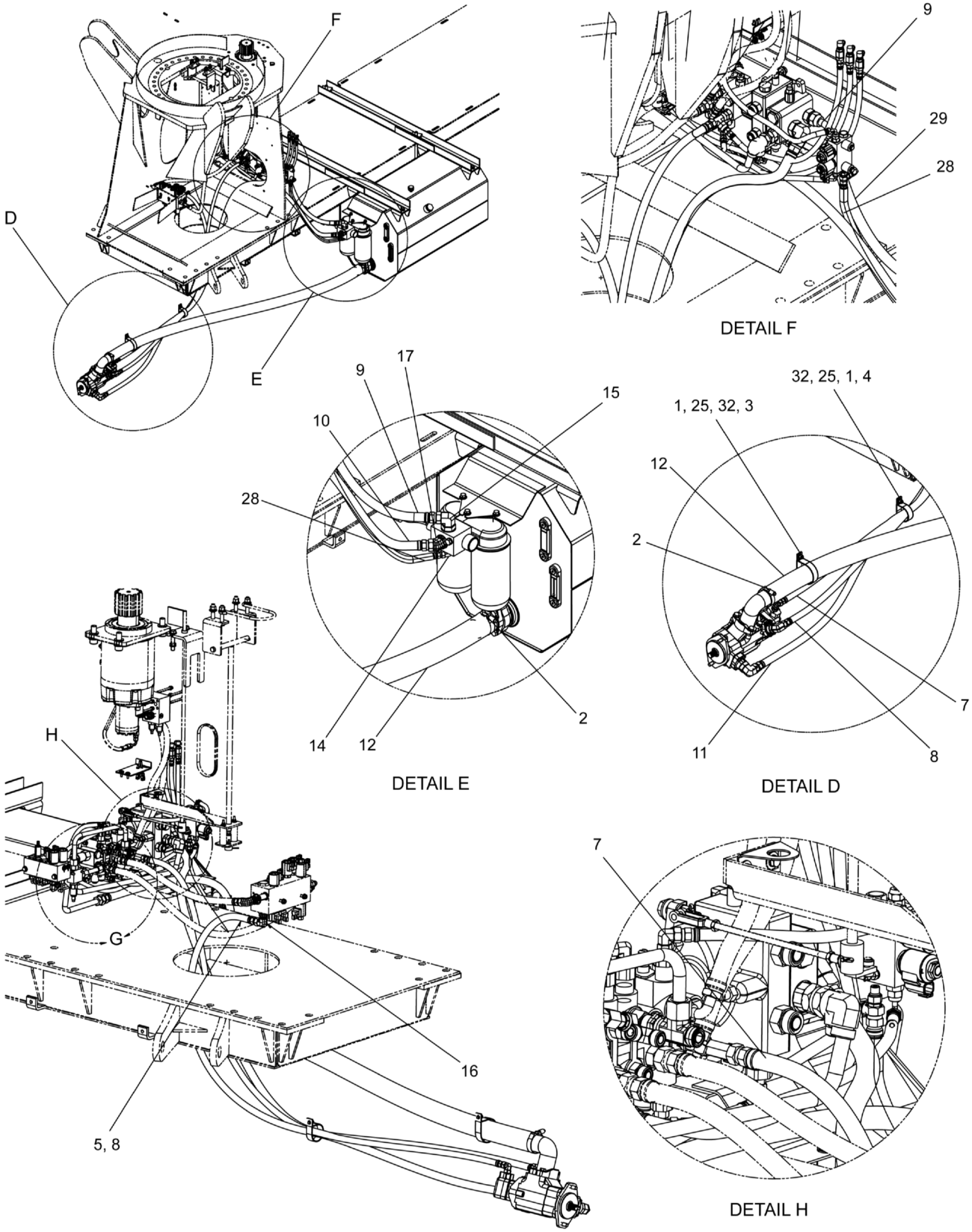

WHEN ORDERING PARTS, SPECIFY MODEL NUMBER, SERIAL NUMBER AND DESCRIPTION OF PARTS REQUIRED

REF	PART NO.	DESCRIPTION	QTY
	500-01847-01 (Rev. J)	*Hydraulic Installation, Pump/Tank*	
1	12196-3	Weld Stud, FT 0.375-16 X 1.00	2
2	1240-101	Clamp RG RAY 700-44 Zinc	2
3	201-00257	Clamp, 3.50 DIA	1
4	201-00258	Clamp, 2.50 DIA	1
5	209-00804	Hose Protector (HP8-B)	1
6	220-07056	Tie Rod	2
7	502-30782	Hose, Pump to Main Valve	1
8	502-35095	Hose, Pump - OR Valve	1
9	502-41017	Hose, Winch Return	1
10	502-41018	Hose, Main Valve Return	1
11	502-41021	Hose, Pump-Winch Valve	1
12	503-06008	Hose, Pump Inlet	1
13	510-70844	Tube, Main Valve Return	1
14	514-55020	Adapter, 90 DEG, ORFS to O-Ring	1
15	514-59023	Elbow 90 DEG, MOFS - 12 / MORB -16	1
16	514-66004	Elbow 90 M#10 OFS X F#10 OFS	1
17	515-07003	Fitting, 45 DEG, FGFF-6802-12-16	1
18	**701-00768**	Mid-Mount Tiedown ASSY (see page 95)	2
19*	709-01908	Plate, Mainframe Tiedown	1
20	789-05852	Tap Block	2
21	**876-00072**	HYD Reservoir INSTL (see page 96)	1
22	N04-750C000-Y8	Nut, HEX 0.75-10, ST YZ GR8	2
23	N04-750F000-Y8	Nut, HEX 0.75-16, ST SQC G8	2
24	N05-750F000-Y8	Nut, HEX Jam 0.75-16, ST YZ GR8	2
25	NYL-375C000-25	Nut, HEX NYL-INS 0.375-16, ST Z G5	2
26	NYL-750F000-Y8	Nut, HX NYL-INS 0.75-16, ST SQC G8	2
27	SHF-750CA75-Y8	SCR, HHCS FT 0.75-10 X 1.75, STYZ G8	2
28	T107878	Hose HYD, Drain/Return	1
29	T109277	Target Plate, Proximity Switch	1
30	W07-750X000-20	WSH, LCK, MED SPLT 0.75, ST Z	2
31	WAH-75NX000-20	WSH, FL HRD A-NRW 0.75, ST SQC	8
32	WAN-37NX000-20	WSH, FL TYPA-NRW 0.375, ST Z	2

* ITEM NOT SHOWN IN ILLUSTRATION

WHEN ORDERING PARTS, SPECIFY MODEL NUMBER, SERIAL NUMBER AND DESCRIPTION OF PARTS REQUIRED

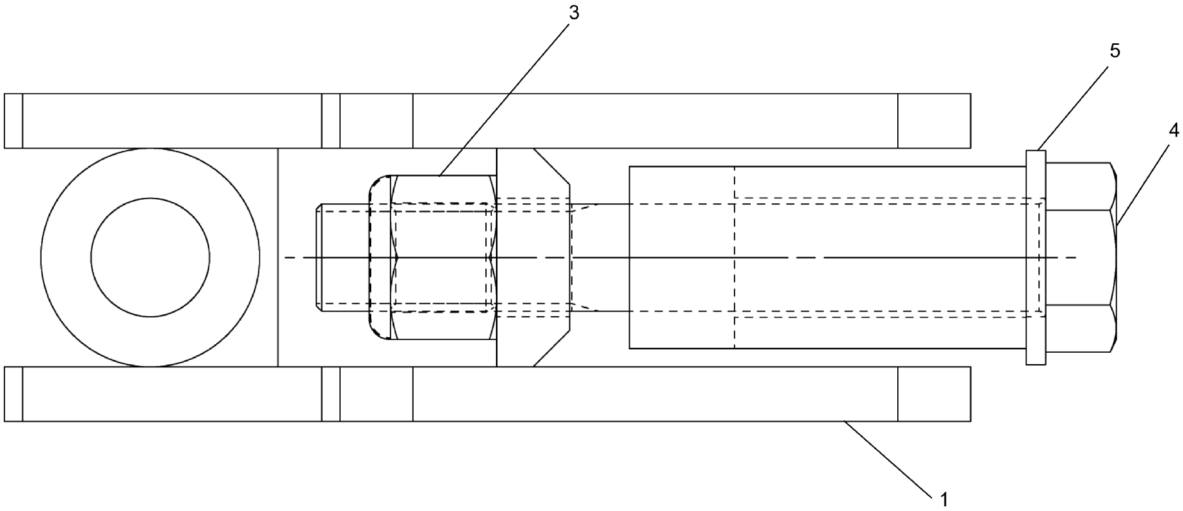

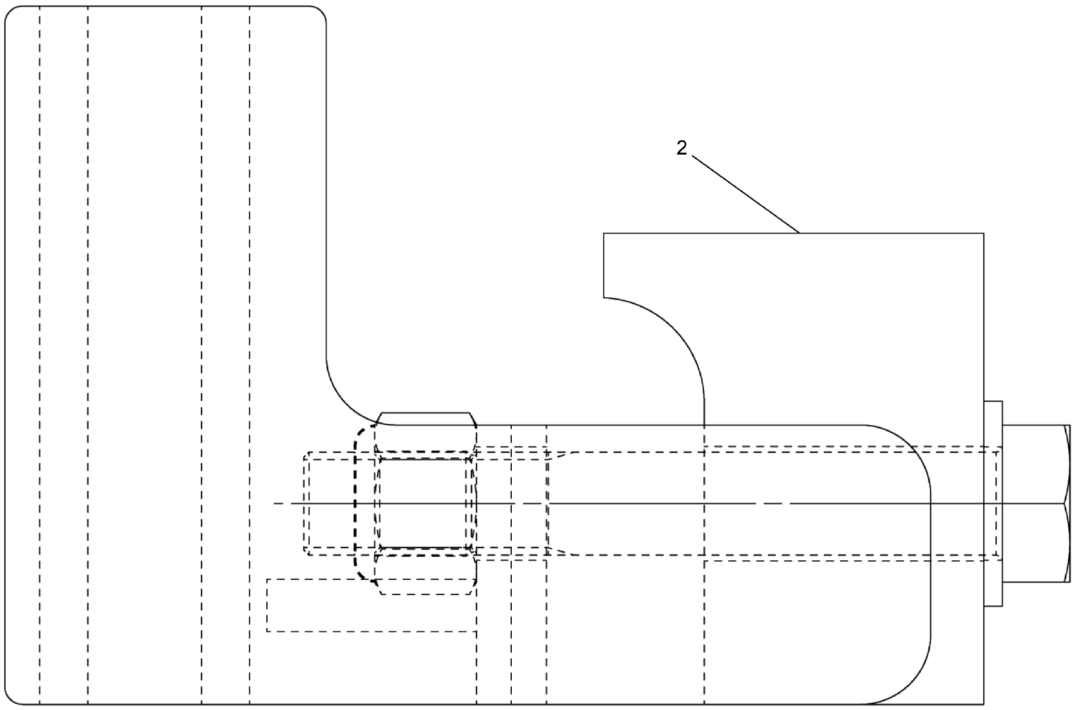

REF	PART NO.	DESCRIPTION	QTY
	701-00768 (Rev. C)	*Mid-Mount Tiedown ASSY*	
1	701-00767	Mid-Mount Weldment	1
2	701-00769	Clamp Plate, Mid-Mount	1
3	NYL-750C000-Y8	Nut, HEX NYL-INS 0.75-10, ST YZ G8	1
4	S01-750CE00-Y8	SCR, HHCS 0.75-10X5.00, ST SQC G8	1
5	WAH-75NX000-20	WSH, FL HRD A-NRW 0.75, ST SQC	1

WHEN ORDERING PARTS, SPECIFY MODEL NUMBER, SERIAL NUMBER AND DESCRIPTION OF PARTS REQUIRED

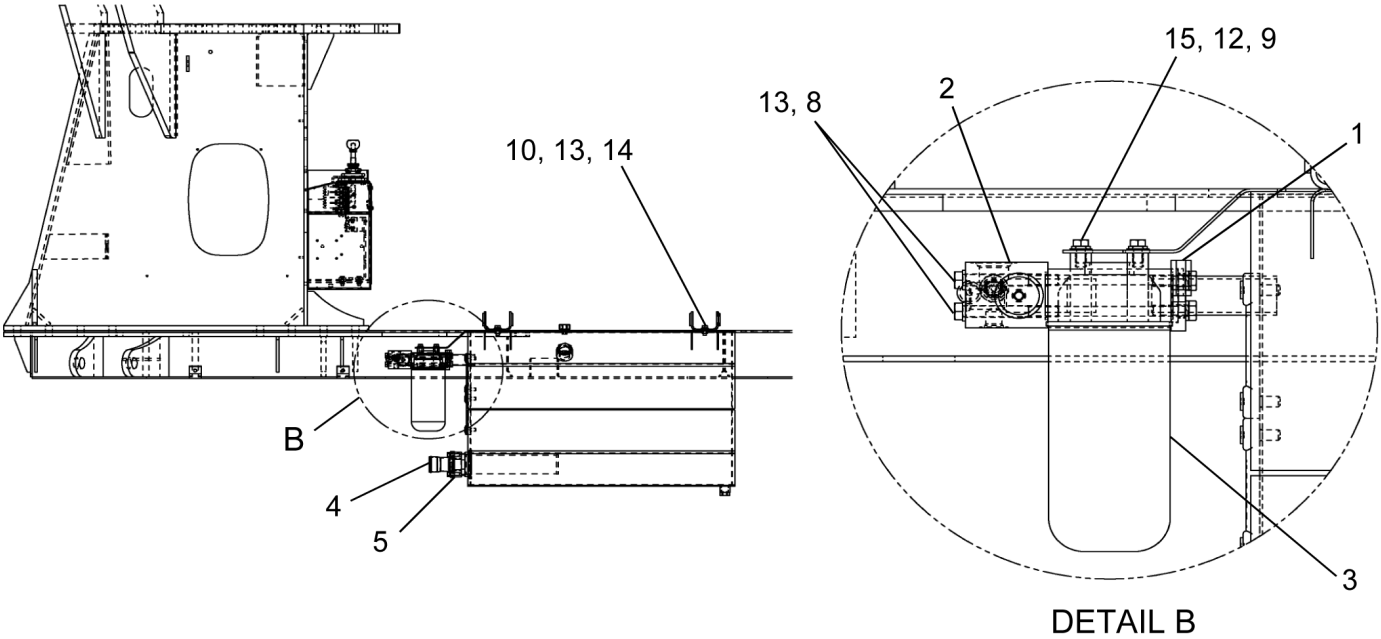

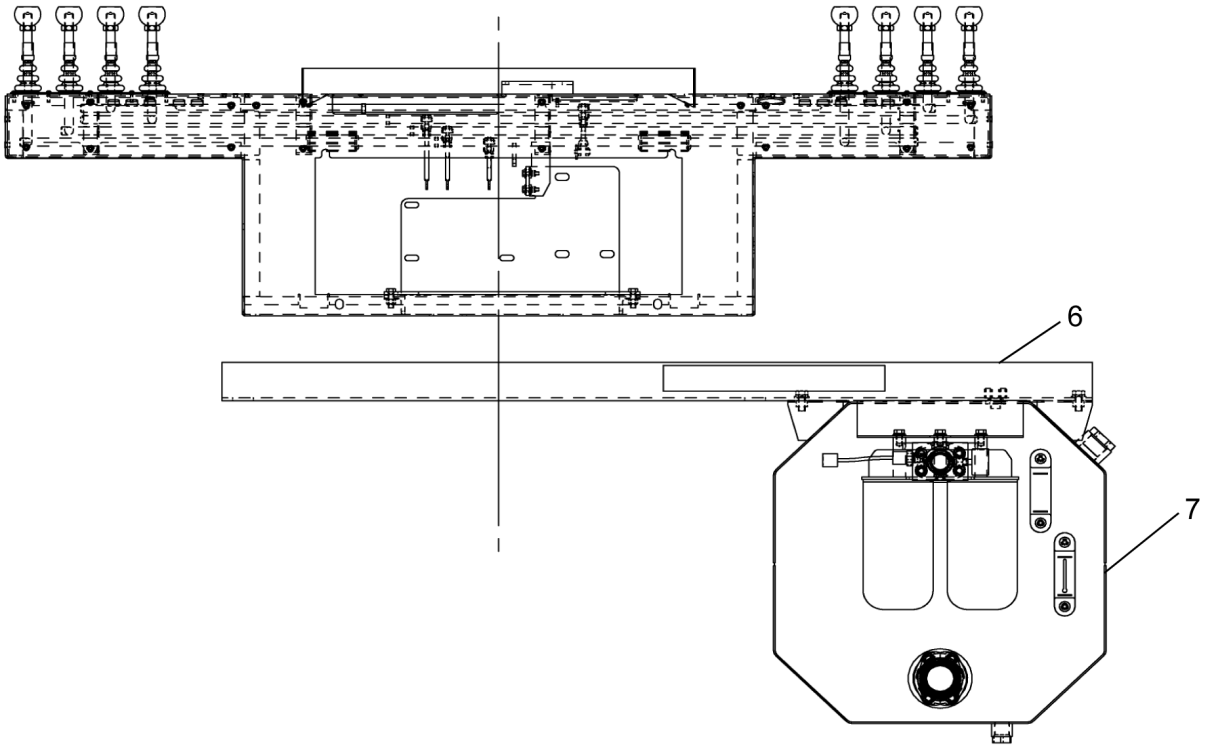

WHEN ORDERING PARTS, SPECIFY MODEL NUMBER, SERIAL NUMBER AND DESCRIPTION OF PARTS REQUIRED

REF	PART NO.	DESCRIPTION	QTY
	876-00072 (Rev. B)	*HYD Reservoir INSTL*	
1	12019-875	Kit, Split Flange, C61-24	1
2	501-02015	Filter Head, Return Manifold	1
3	501-02018	Filter Element	2
4	504-03516	Suction Tube	1
5	**505-05002**	Kit, Split Flange, C61-32 (see page 98)	1
6	875-90370	Bracket Weld, HYD RES Mount	2
7	**875-90377**	Hydraulic Tank ASSY (see page 99)	1
8	S01-500CD00-25	SCR, HHCS 0.50-13X4.00, ST Z GR5	2
9	SHF-438C750-25	SCR, HHCS FT 0.438-14X0.75, STZ G5	3
10	SHF-500CA25-Y8	SCR, HHCS FT 0.50-13X1.25, STYZ G8	4
11*	T145084	Oil, All Weather Hydraulic	98GAL
12	W07-438X000-20	WSH, LCK, MED SPLT 0.4375, ST SQC	3
13	W07-500X000-20	WSH, LCK, MED SPLT 0.50, ST Z	6
14	WAH-50NX000-Y2	WSH, FL HRD A-NRW 0.50, ST YZ	4
15	WAN-43NX000-20	WSH, FL TYPA-NRW 0.4375, ST Z	3

* ITEM NOT SHOWN IN ILLUSTRATION

WHEN ORDERING PARTS, SPECIFY MODEL NUMBER, SERIAL NUMBER AND DESCRIPTION OF PARTS REQUIRED

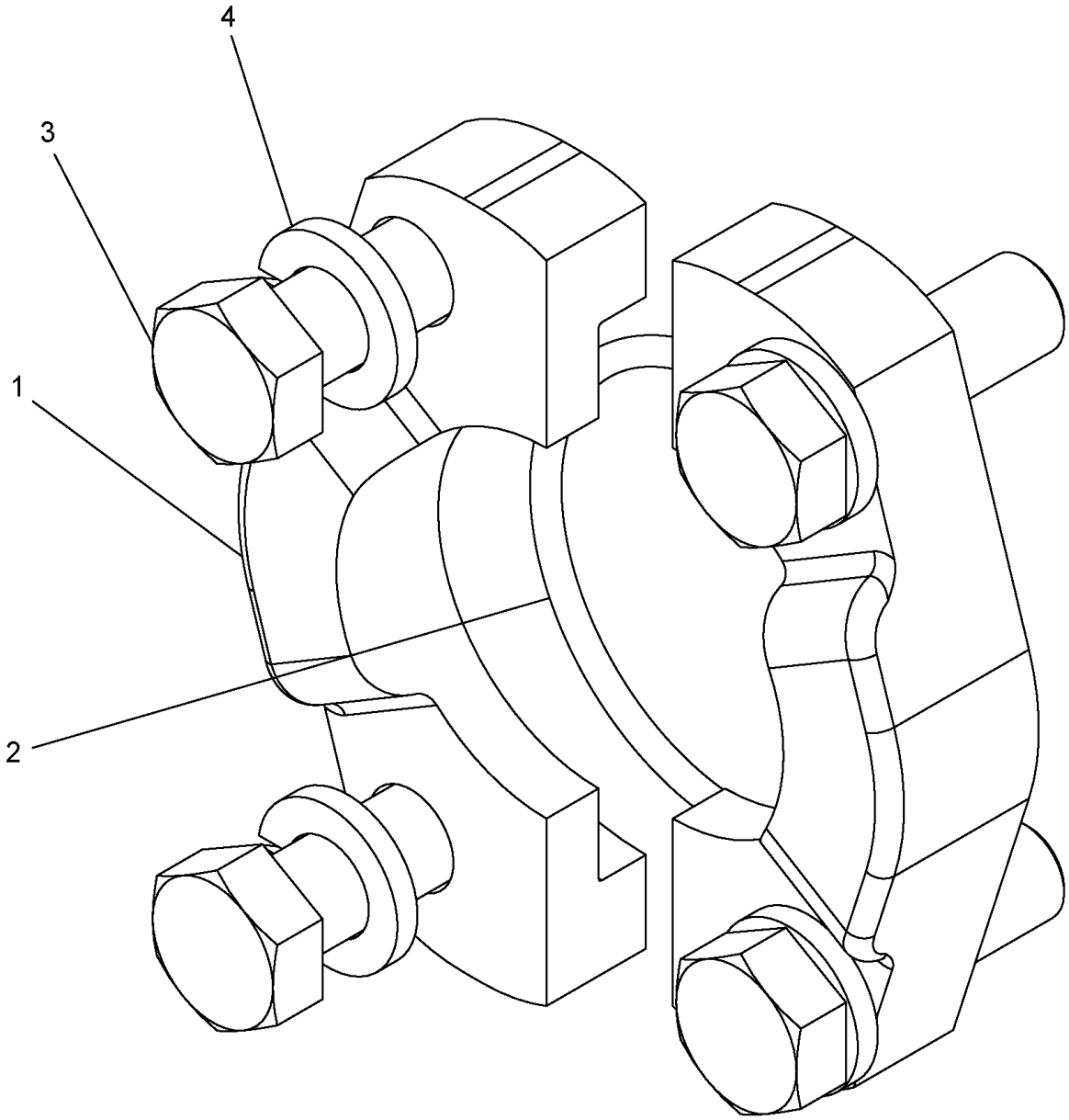

REF	PART NO.	DESCRIPTION	QTY
	505-05002 (Rev. A)	*Kit, Split Flange, C61-32*	
1	505-05003	Clamp, Split Flange, C61-32	2
2	260-40005	O-Ring, SAE C61/C62-32	1
3	SHF-500CA50-25	SCR, HHCS FT 0.50-13 X 1.50, ST SQC G5	4
4	W07-500X000-20	WSH, LCK, MED SPLT 0.50, ST Z	4

WHEN ORDERING PARTS, SPECIFY MODEL NUMBER, SERIAL NUMBER AND DESCRIPTION OF PARTS REQUIRED

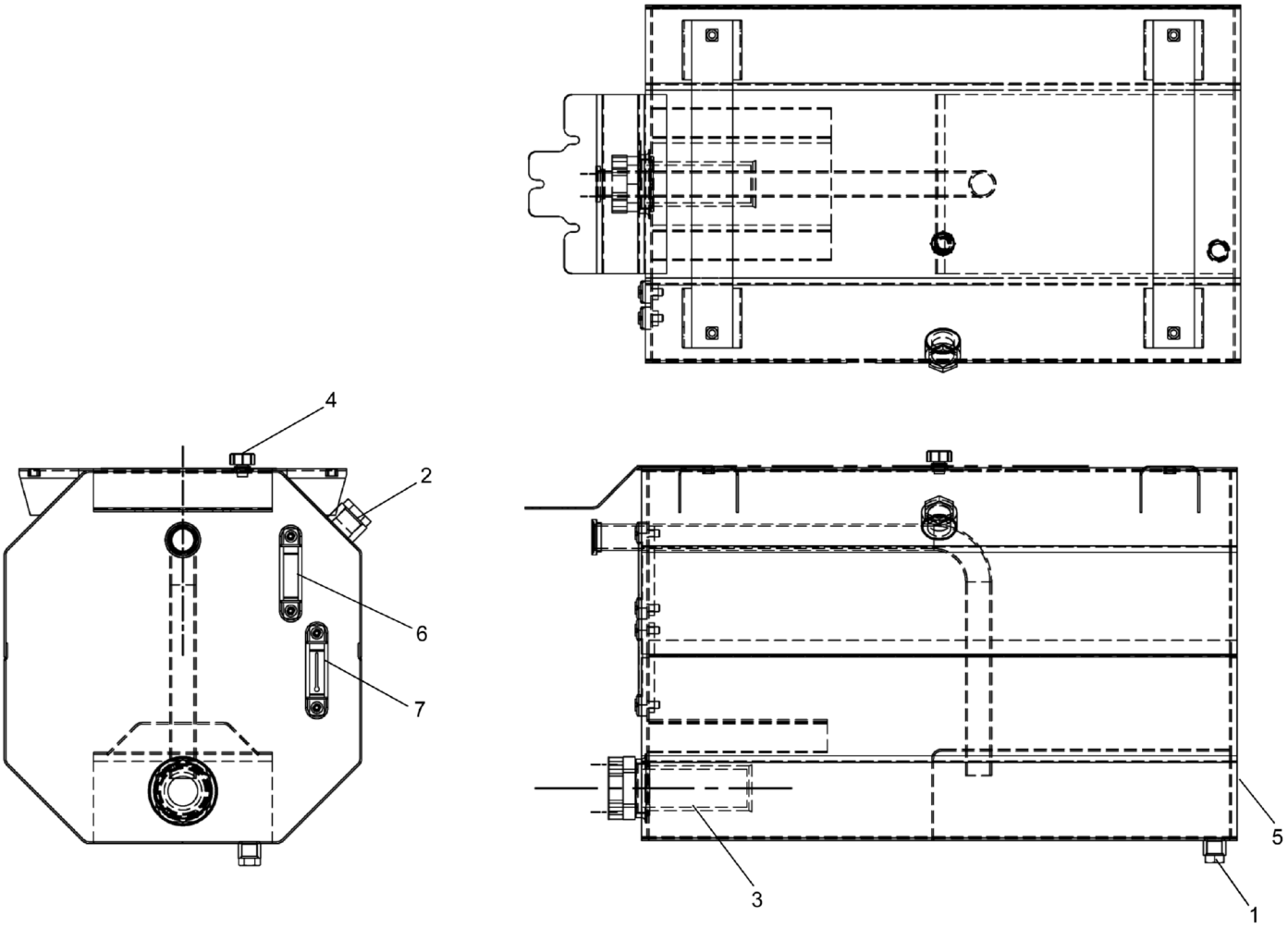

REF	PART NO.	DESCRIPTION	QTY
	875-90377 (Rev. C)	*Hydraulic Tank ASSY*	
1	517- 30004	Plug, SOC HD 3/4 ORB	1
2	517-30013	Plug, HEX -20 ORB	1
3	875-90360	Strainer, Suction	1
4	1037568	Breather, Hydraulic	1
5	875-90378	Reservoir Weldment, 80 GAL	1
6	875-90395	Sight Gauge, Oil Level	1
7	875-90396	Sight Gauge, Oil Level W/Temp	1

WHEN ORDERING PARTS, SPECIFY MODEL NUMBER, SERIAL NUMBER AND DESCRIPTION OF PARTS REQUIRED

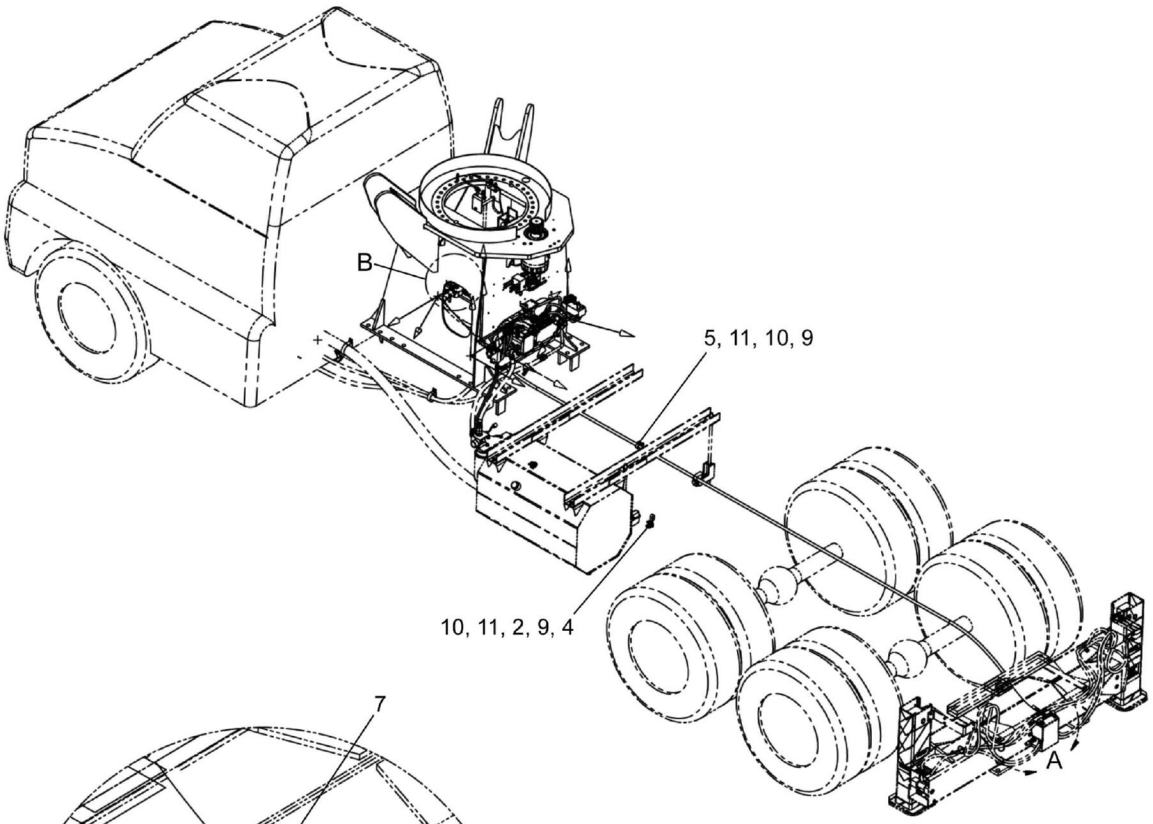

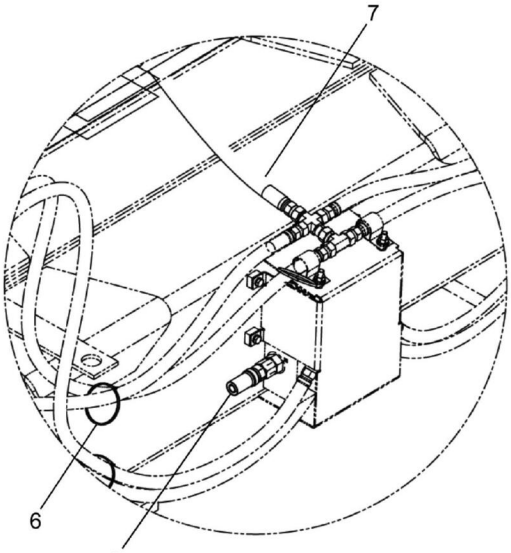

DETAIL A

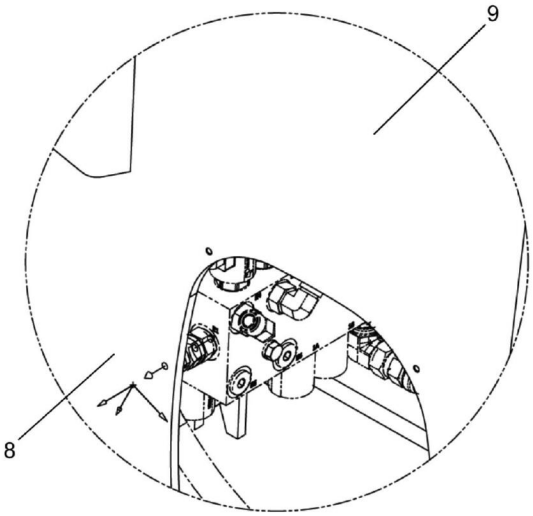

DETAIL B

REF	PART NO.	DESCRIPTION	QTY
	500-01848-01 (Rev. D)	*HYD INSTL, AUX Outrigger*	
1*	12196-12	Weld STUD, FT 0.25-20X0.75	5
2	200B2007-67	Clamp, Double, MED, 0.88 ID	2
3*	200B2007-7	Clamp 7/8 DIA With 0.41 Hole	1
4	209-00879	Frame Clip Caddy, DBLE	2
5	209-00880	Frame Clip Caddy, SNGL	1
6	400-15088	Ties, Cable / Hose	7
7	502-21032	Hose ASSY, O/R Retract	1
8	502-30791	Hose, AUX O/R Extend	1
9	516-84003	Tee, MOFS-6/FOFS-6SW/MOFS-6	1
10	NYL-750F000-Y8	Nut, HX NYL-INS 0.75-16, ST SQC G8	2
11	SHF-250C750-25	SCR, HHCS, 0.25-20 X 0.75, ST SQC G5	3
12*	W07-250X000-20	Washer, LCK, MED SPLT 0.25, ST SQC	3
13*	WBR-25RX734-20	Washer, FL TYPB-REG 0.25, ST SQC	3

* ITEM NOT SHOWN IN ILLUSTRATION

WHEN ORDERING PARTS, SPECIFY MODEL NUMBER, SERIAL NUMBER AND DESCRIPTION OF PARTS REQUIRED

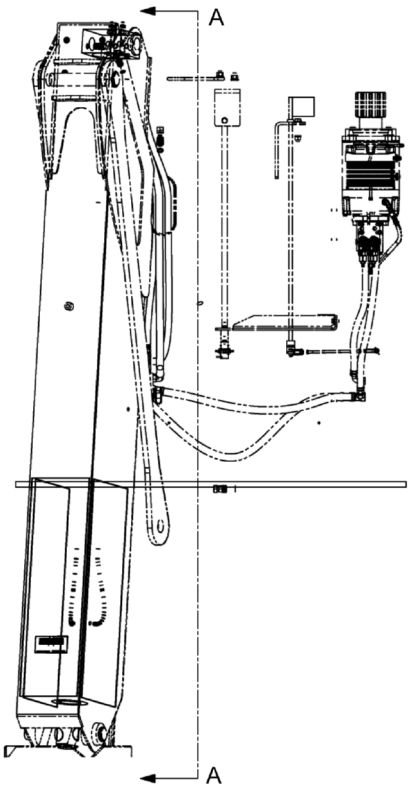

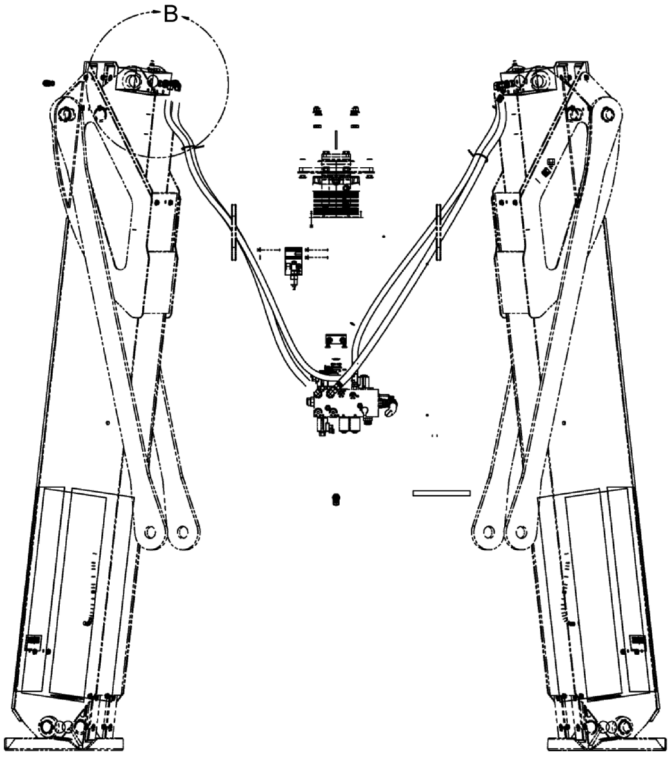

SECTION A - A

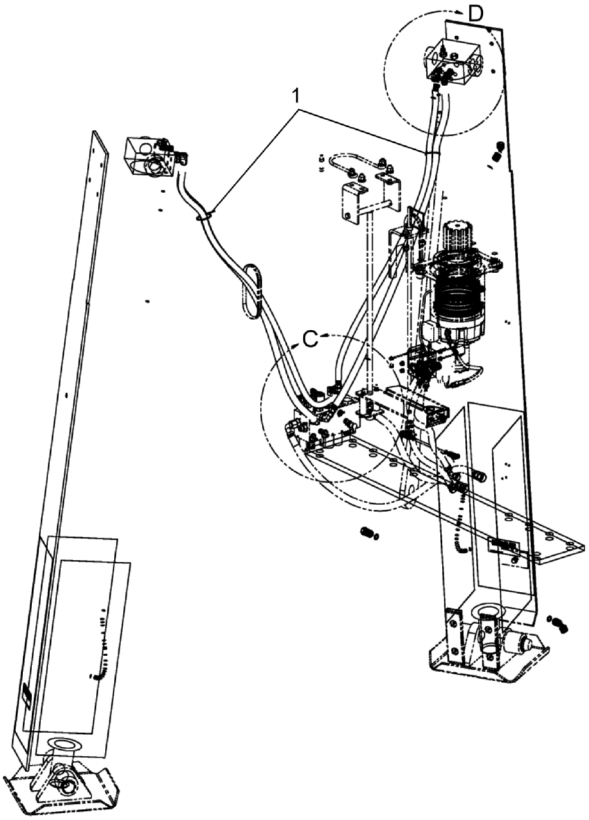

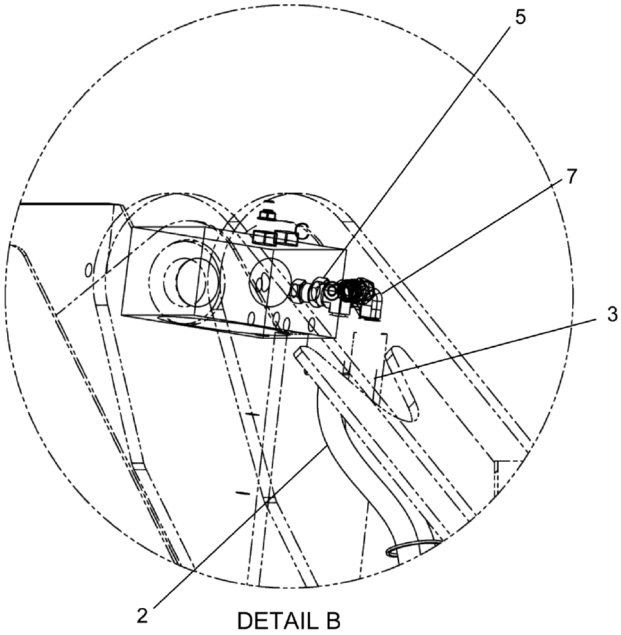

DETAIL B

WHEN ORDERING PARTS, SPECIFY MODEL NUMBER, SERIAL NUMBER AND DESCRIPTION OF PARTS REQUIRED

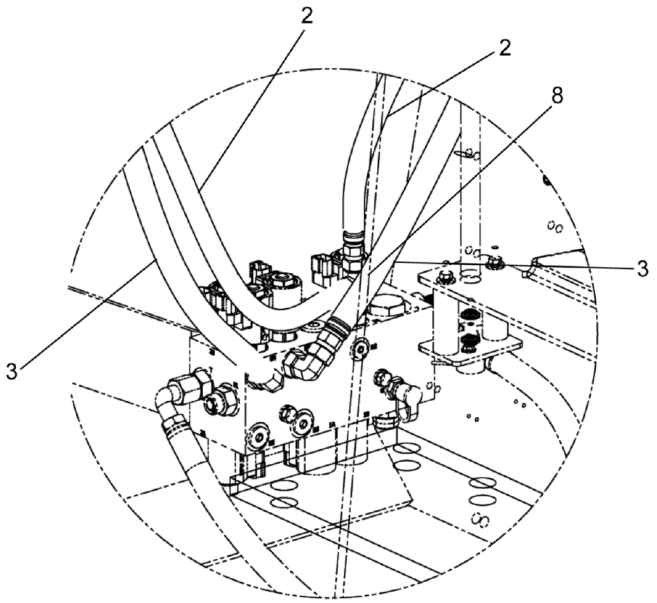

DETAIL C

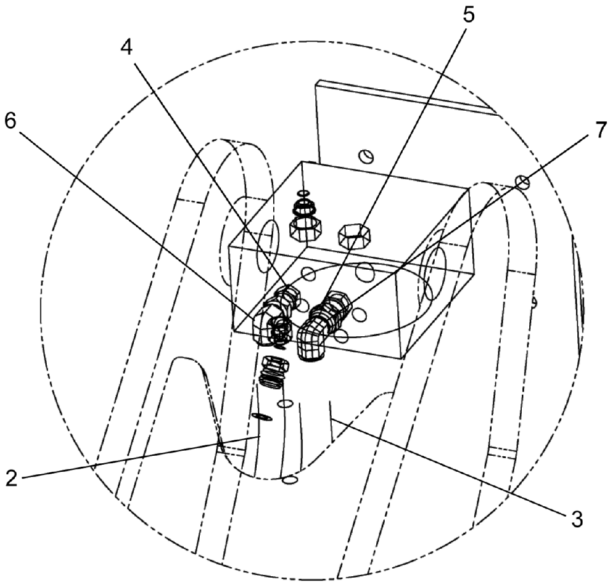

DETAIL D

REF	PART NO.	DESCRIPTION	QTY
	500-01849-01 (Rev. C)	*HYD INSTL, Main Outrigger*	
1	400-15086	Tie, Nylon CBL, 1.75 DIA	5
2	502-21029	Hose, Main Outrigger Retract	2
3	502-30789	Hose, Main Outrigger Extend	2
4	513-40014	Adapter, MOFS-6/MORB-6	2
5	513-50023	Adapter, MOFS-8/MORB-8	2
6	514-64002	Elbow 90°, Swivel, -6	2
7	514-65004	Elbow 90°, M#8 OFS X F#8 OFS SW	2
8	516-84003	Tee, MOFS-6/FOFS-6SW/MOFS-6	1

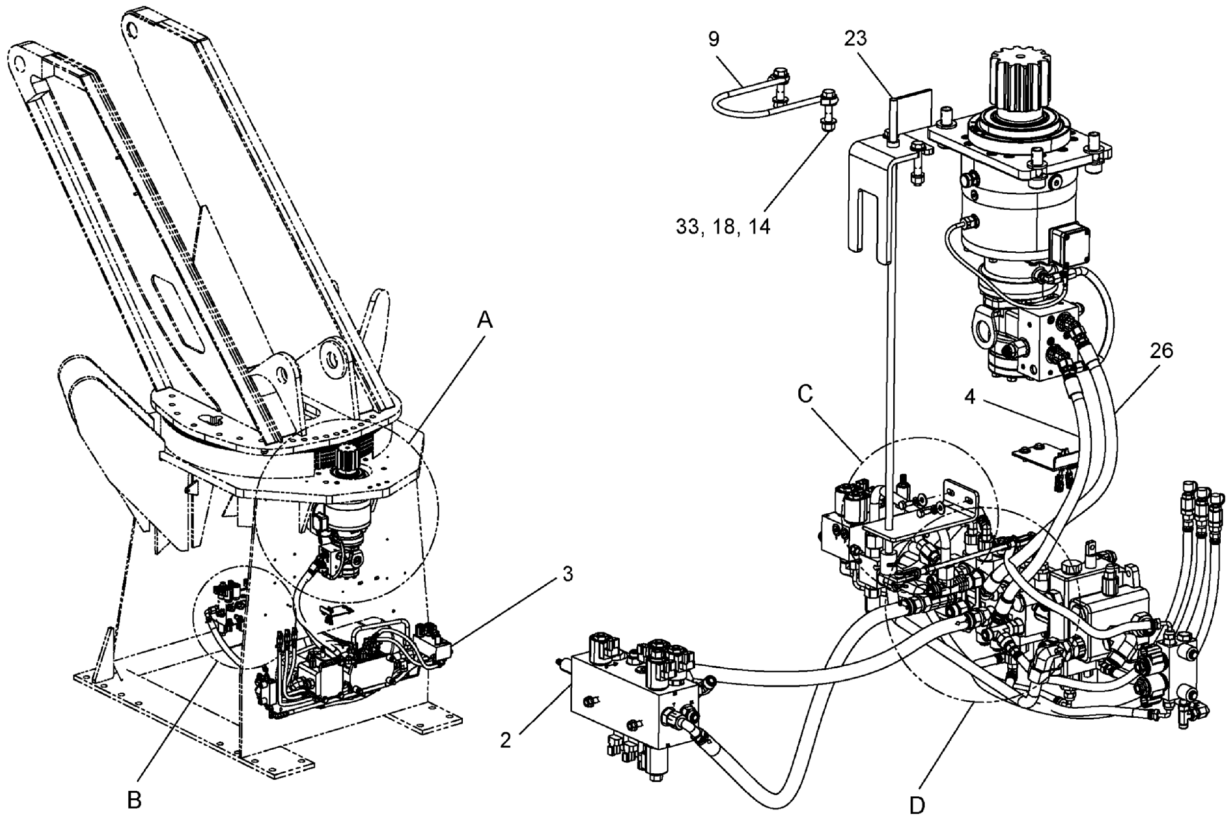

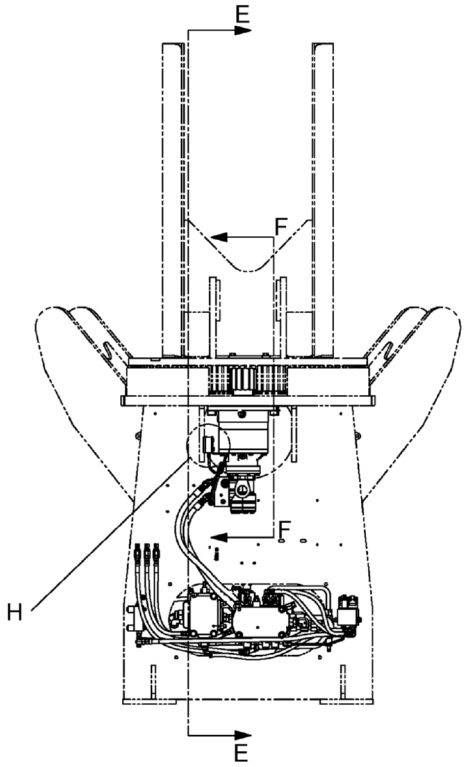

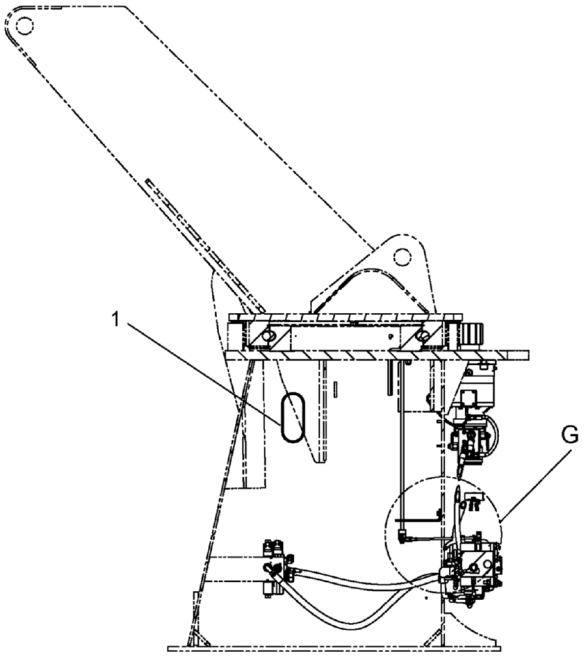

SECTION E - E

WHEN ORDERING PARTS, SPECIFY MODEL NUMBER, SERIAL NUMBER AND DESCRIPTION OF PARTS REQUIRED

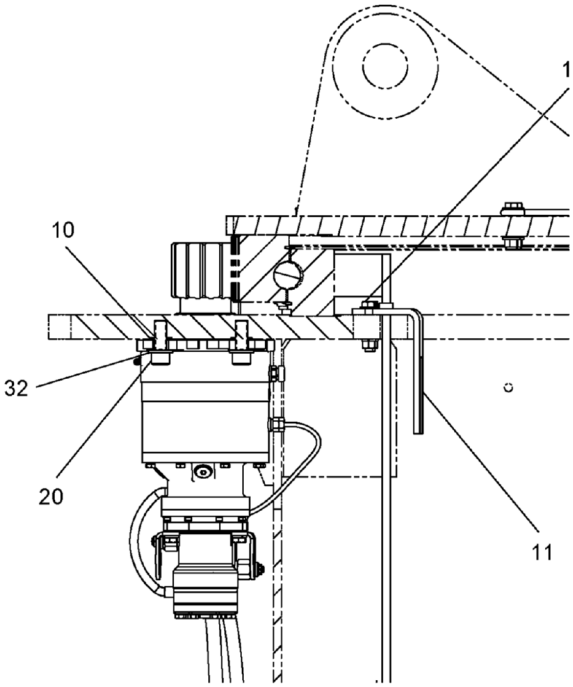

SECTION F - F

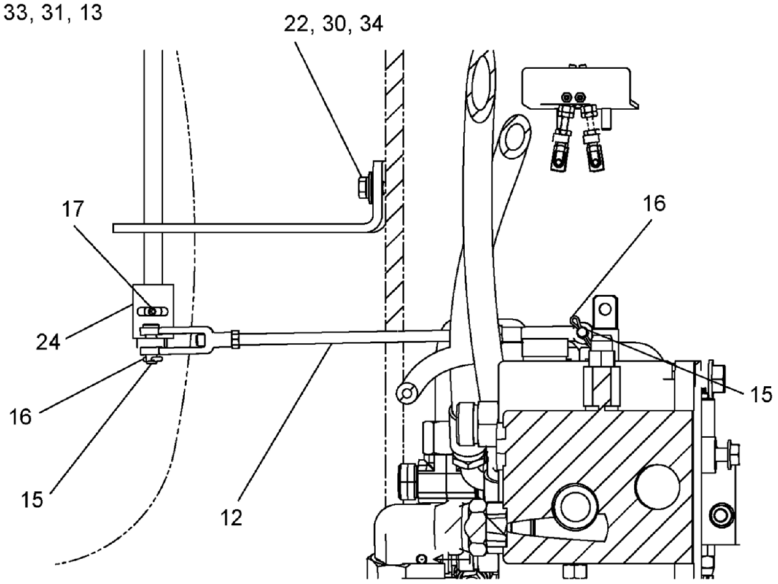

DETAIL G

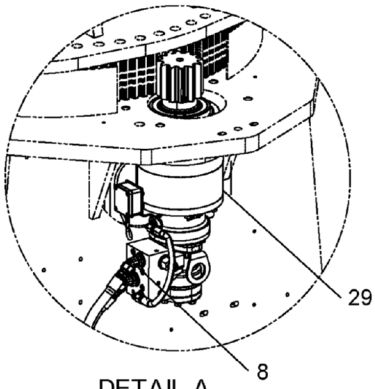

DETAIL A

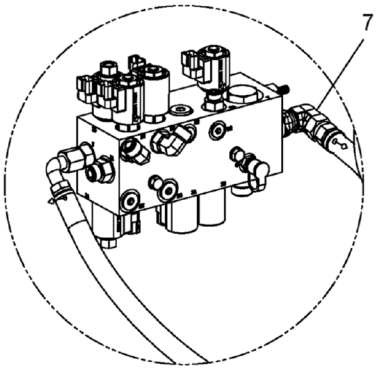

DETAIL B

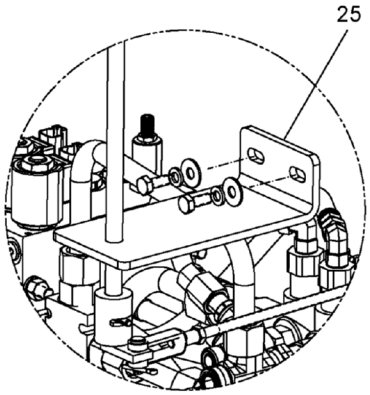

DETAIL C

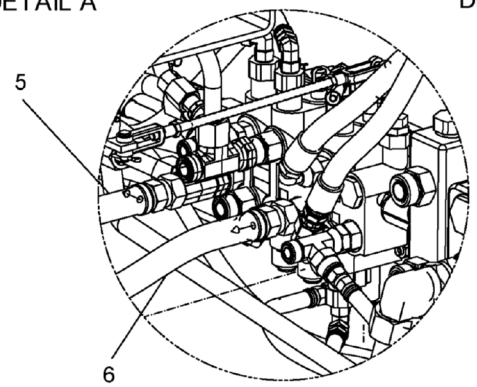

DETAIL D

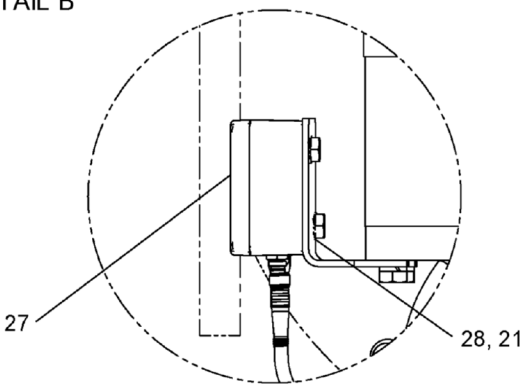

DETAIL H

WHEN ORDERING PARTS, SPECIFY MODEL NUMBER, SERIAL NUMBER AND DESCRIPTION OF PARTS REQUIRED

REF	PART NO.	DESCRIPTION	QTY
	T117824 (Rev. C)	*INSTL, Main-Console HYD*	
1	12169-20	Flex Trim 3/8" X 18" Long	2
2	**500-01851**	ASSY, Main Outrigger Valve (see page 108)	1
3	**500-01852-01**	HYD INSTL, Console CF Winch (see page 110)	1
4	502-30779	Hose, Swing-Drive	1
5	502-35082	Hose, Outrigger Return	1
6	502-35091	Hose OR PB-Boom	1
7	514-66004	Elbow 90 M#10 OFS X F#10 OFS	1
8	515-05005	45 Elbow #8 OFS X #10 ORB	2
9	770-02831	Bracket, House Guide	1
10	781-00336	Boss, 1.38 X 0.813 X 0.16	4
11	789-06007	Swivel, Stop Arm	1
12	806-00246	Swing K/O Lock(01141)	1
13	N04-500C000-25	Nut, HEX 0.50 - 13, ST Z GR5	2
14	NYL-500C000-25	Nut, HEX NYL - INS 0.50-13, ST Z G5	2
15	P01-312XA00-P0	Pin, Clevis 0.3125 X 1.00, STL	2
16	P02-125X750-20	Pin, Cotter 0.125 X 0.75, ST SQC	2
17	P22-188XA50-GP	Pin, Spring SLTD 0.1875 X 1.50, ST	1
18	S01-500CB50-25	SCR, HHCS 0.50-13X2.50, ST Z GR5	2
19	S01-500CB75-25	SCR, HHCS 0.50-13X2.75, ST Z GR5	2
20	S14-750CB00-H2	SCR, SHCS 0.75 - 10 X 2.00, ST Z	4
21	SHF-250C625-25	SCR, HHCS FT 0.25-20 X 0.625, ST SQC G5	2
22	SHF-312C750-25	SCR, HHCS FT 0.312-18 X 0.75, ST SQC G5	2
23	T109850	Flag WELD, Swing Stop	1
24	T110499	Swing Stop Weldment	1
25	T118589	Bracket	1
26	T133371	Hose, -8, 4000, FOFS-8SW/FOFS-8SW90, 700	1
27	T145537	Wad Sensor	1
28	T145587	Washer, Lock, External Tooth, 0.25	2
29	**T146435**	Swing Drive (Omnigear) (see page 120)	1
30	W07-312X000-20	WSH, LCK, MED SPLT 0.3125, ST SQC	2
31	W07-500X000-20	WSH, LCK, MED SPLT 0.50, ST Z	2
32	WAH-75NX000-Y2	WSH, FL HRD A-NRW 0.75, ST YZ	4
33	WAN-50NX000-20	WSH, FL TYPA-NRW 0.50, ST Z	8
34	WBR-31RX875-20	WSH, FL TYPB-REG 0.3125, ST Z	2

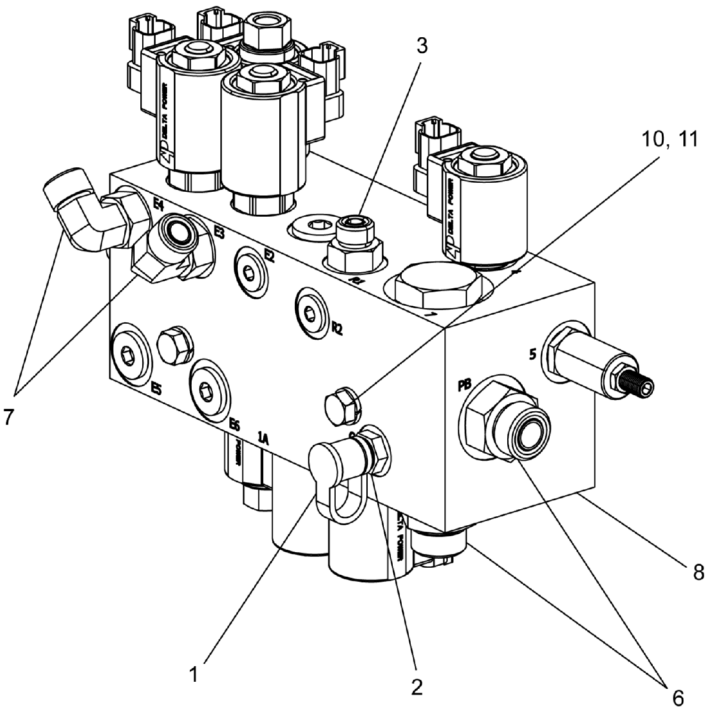
3
10, 11
7
1
2
6
8

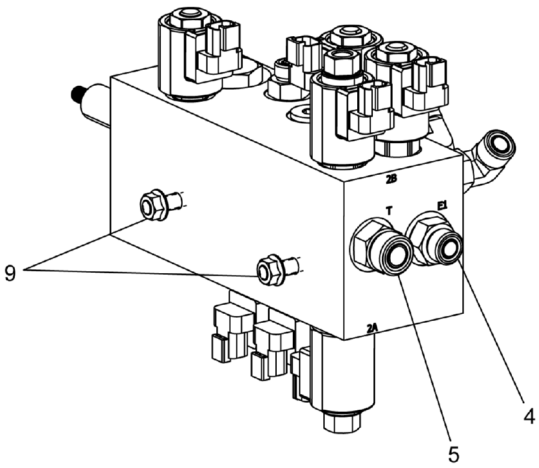
9
4
5

REF	PART NO.	DESCRIPTION	QTY
	500-01851 (Rev. A)	*ASSY, Main Outrigger Valve*	
1	120-19558	Dust Cap	1
2	375-0400	Adapter, MORB-6/HQC-4	1
3	513-40018	Adapter, MOFS-6/MORB-8	1
4	513-50027	Adapter, MOFS-8/MORB-10	1
5	513-60008	Adapter, MORB-10/MOFS-10	1
6	513-60015	Adapter, MOFS-10/MORB-12	2
7	514-55011	90° Elbow M#8 OFS X M#8 ORB	2
8	551-10145	Valve - OR	1
9	NFS-375C000-25	Nut, HEX, FLG, SER.375-16, ST SQC G5	2
10	S01-375FD50-25	SCR, HHCS 0.375-24 X 4.50, ST SQC G5	2
11	W07-375X000-20	WSH, LCK, MED SPLT 0.375, ST Z	2

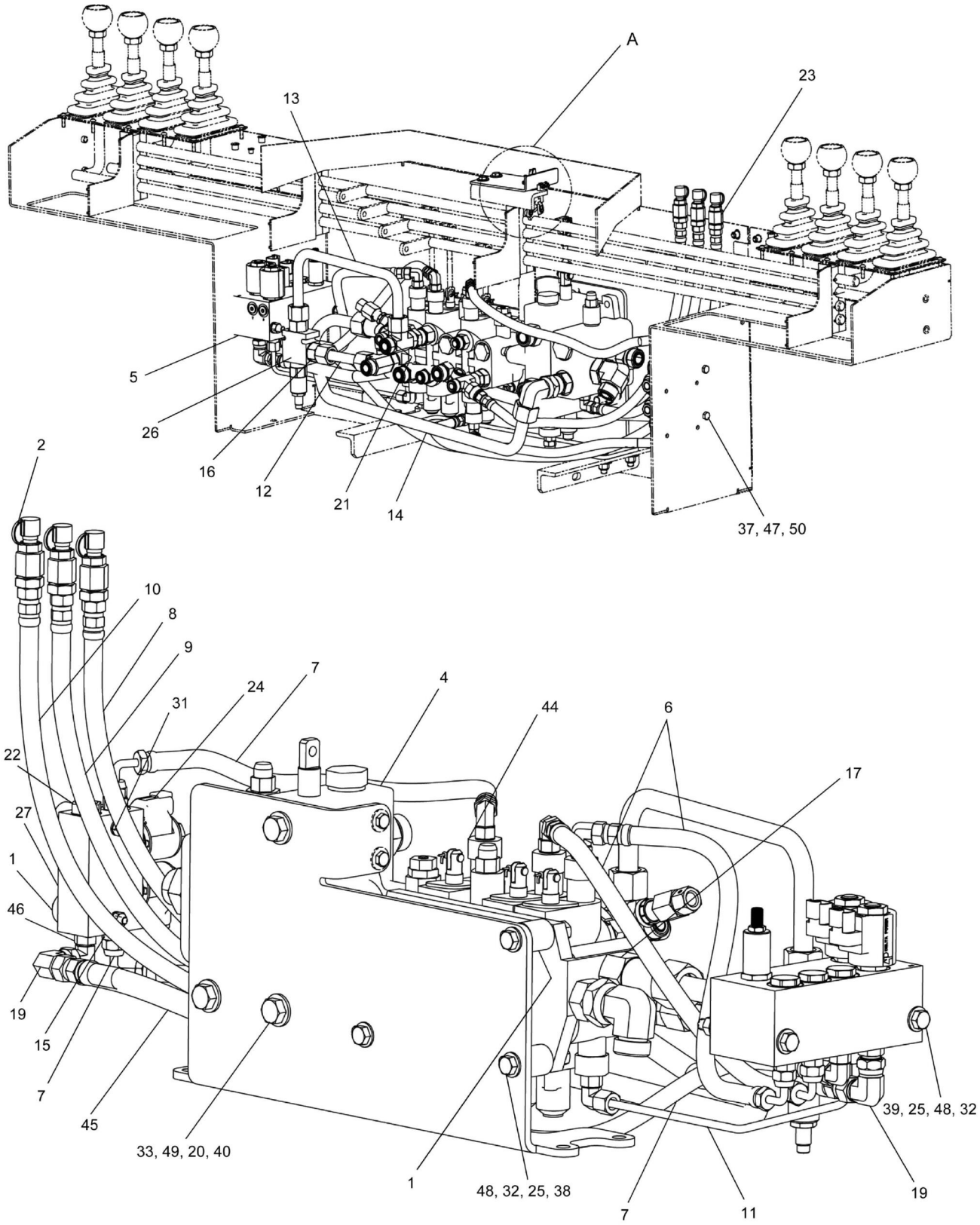

WHEN ORDERING PARTS, SPECIFY MODEL NUMBER, SERIAL NUMBER AND DESCRIPTION OF PARTS REQUIRED

LOAD KING BY CUSTOM TRUCK 1 SOURCE	**HYD INSTL CONSOLE COMBINED FLOW WINCH (CONROT & NONCON)**	DATE: Revised 11-2017	**CHAPTER**
		MODEL: 28-106	**1**
		PAGE: 110	

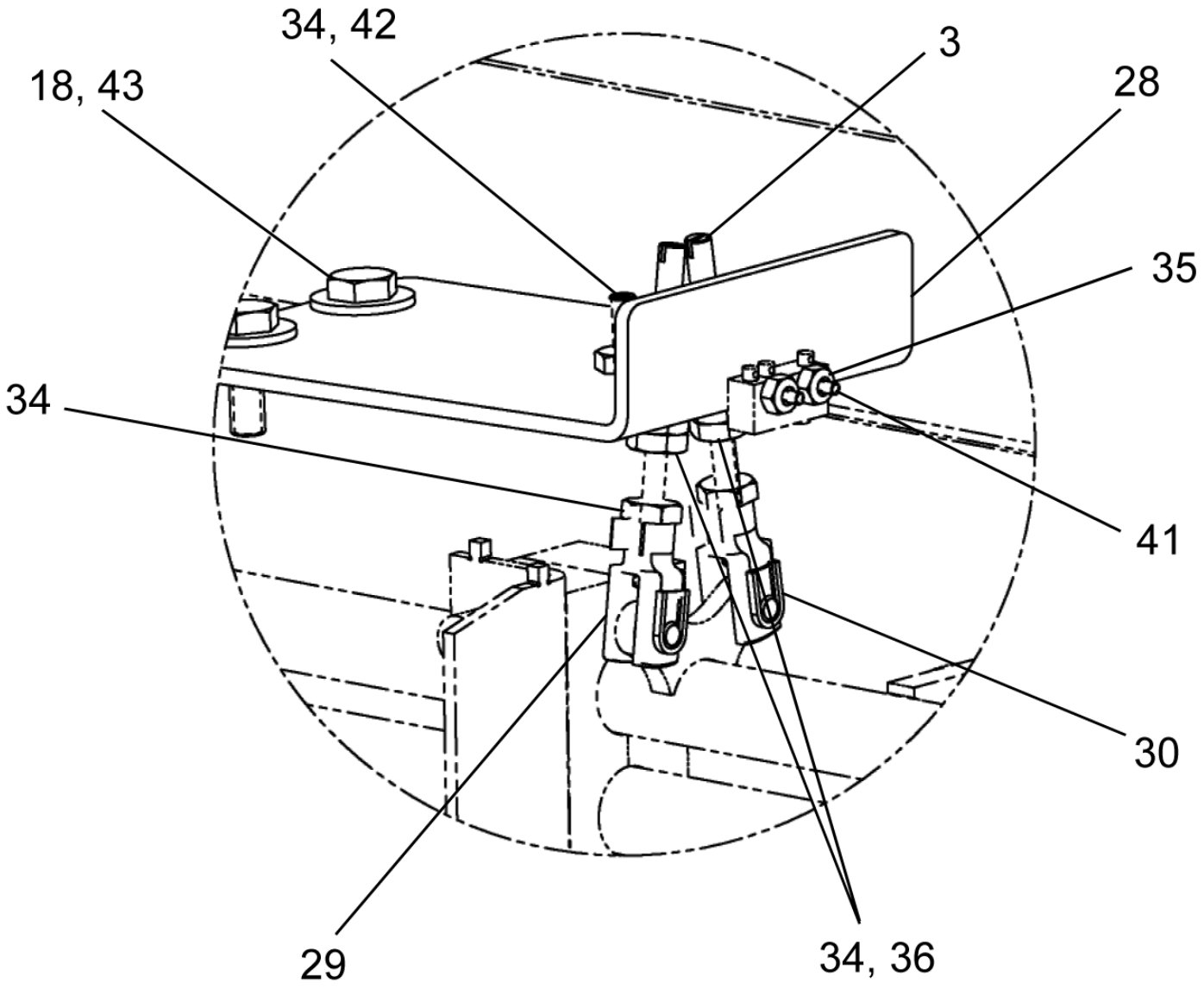

DETAIL A

REF	PART NO.	DESCRIPTION	QTY
	500-01852-01 (Rev. G)	*HYD INSTL, Console CF Winch*	
1	001-20057	Spacer, CYL 0.406 X 1.00 X 1.00	5
2	12019-558	Dust Cap, HQC-4	3
3	229-00028	STUD, SLTD 10-32 X 2.44	2
4	**500-01827**	Valve SUBASSY, Winch (see page 114)	1
5	**500-01828**	Valve ASSY, RCI (see page 116)	1
6	502-11325	Hose, LMI-Boom Topping	2
7	502-11327	Hose, LMI Winch Raise Unloadng	3
8	502-11330	Hose, Swing Test Port	1
9	502-11331	Hose, Winch Test Port	1
10	502-11332	Hose, Main Valve Test Port	1
11	510-20463	Tube, PB Unload, 0.25 DIA	1
12	510-60022	Tube, Tele Relief, 0.625 DIA	1
13	510-60023	Tube, Tele Relief, 0.625 DIA	1
14	510-70847	Tube, Power Beyond	1
15	513-20019	Adapter, MOFS-4/MORB-6	2
16	513-60012	Adapter, MOFS-10/MORB-8	2
17	513-70040	Adapter, MOFS-12/MORB-12, L	1
18	WBR-25RX734-20	Washer, FL TYPB-REG 0.25, ST SQC	2
19	514-64002	Elbow 90°, Swivel, -6	2
20	WAN-50NX000-20	WSH, FL TYPA-NRW 0.50, ST Z	3
21	516-86002	Tee, MOFS-10/FOFS-10SW/MOFS-10	1
22	517-30001	Plug, HEX Head 0.50	1
23	518-20013	Parker # PD 346	3
24	551-10154	Valve, Dual Pilot ELEC	1
25	WAN-37NX000-20	WSH, FL TYPA-NRW 0.375, ST Z	5
26	559-00262	Valve, Relief	1
27	7073910	Valve Body	1
28	789-05957	Plate, Spring Switch	1
29	809-00508	Clevis Fork, 10-32 X 0.1875	2
30	809-00509	Clevis Bracket Weldment 0.1875	2
31	N04-250C000-25	Nut, HEX 0.25-20, ST SQC G5	2
32	N04-375C000-25	Nut, HEX 0.375-16, ST Z GR5	5
33	N04-500C000-25	Nut, HEX 0.50 - 13, ST Z GR5	3
34	N23-190F000-20	Nut, HEX, MACH 10-32, ST SQC	5
35	NYL-086C000-22	Nut, HEX NYL-INS 02-56, ST SQC G2	2
36	NYL-190F000-22	Nut, HEX NYL-INS 10-32, ST SQC G2	2
37	S01-250CC00-25	SCR, HHCS 0.25-20 X 3.00, ST Z GR5	2
38	S01-375CB50-25	SCR, HHCS 0.375-16 X 2.50, ST SQC G5	3
39	S01-375CD00-25	SCR, HHCS 0.375-16 X 4.00, ST SQC G5	2
40	S01-500CB00-25	SCR, HHCS 0.50-13X2.00, ST Z GR5	3
41	S14-086C625-HB	SCR, SHCS 02-56 X 0.625, ST BX	2
42	S42-190F750-BX	SCR, SSS OV 10-32 X 0.75, ST BLKOX	1
43	SHF-250C750-25	SCR, HHCS, 0.25-20 X 0.75, ST SQC G5	2
44	**T105907**	Valve ASSY (see page 118)	1
45	T107878	Hose HYD, Drain/Return	1
46	T117449	Tee, MOFS-6/MORB-6/MOFS-6	1
47	W07-250X000-20	Washer, LCK, MED SPLT 0.25, ST SQC	2
48	W07-375X000-20	WSH, LCK, MED SPLT 0.375, ST Z	5
49	W07-500X000-20	WSH, LCK, MED SPLT 0.50, ST Z	3

REF	PART NO.	DESCRIPTION	QTY
	500-01852-01 (Rev. G)	*HYD INSTL, Console CF Winch*	
50	WAN-25NX000-20	WSH, FL TYPA-NRW 0.25, ST Z	2

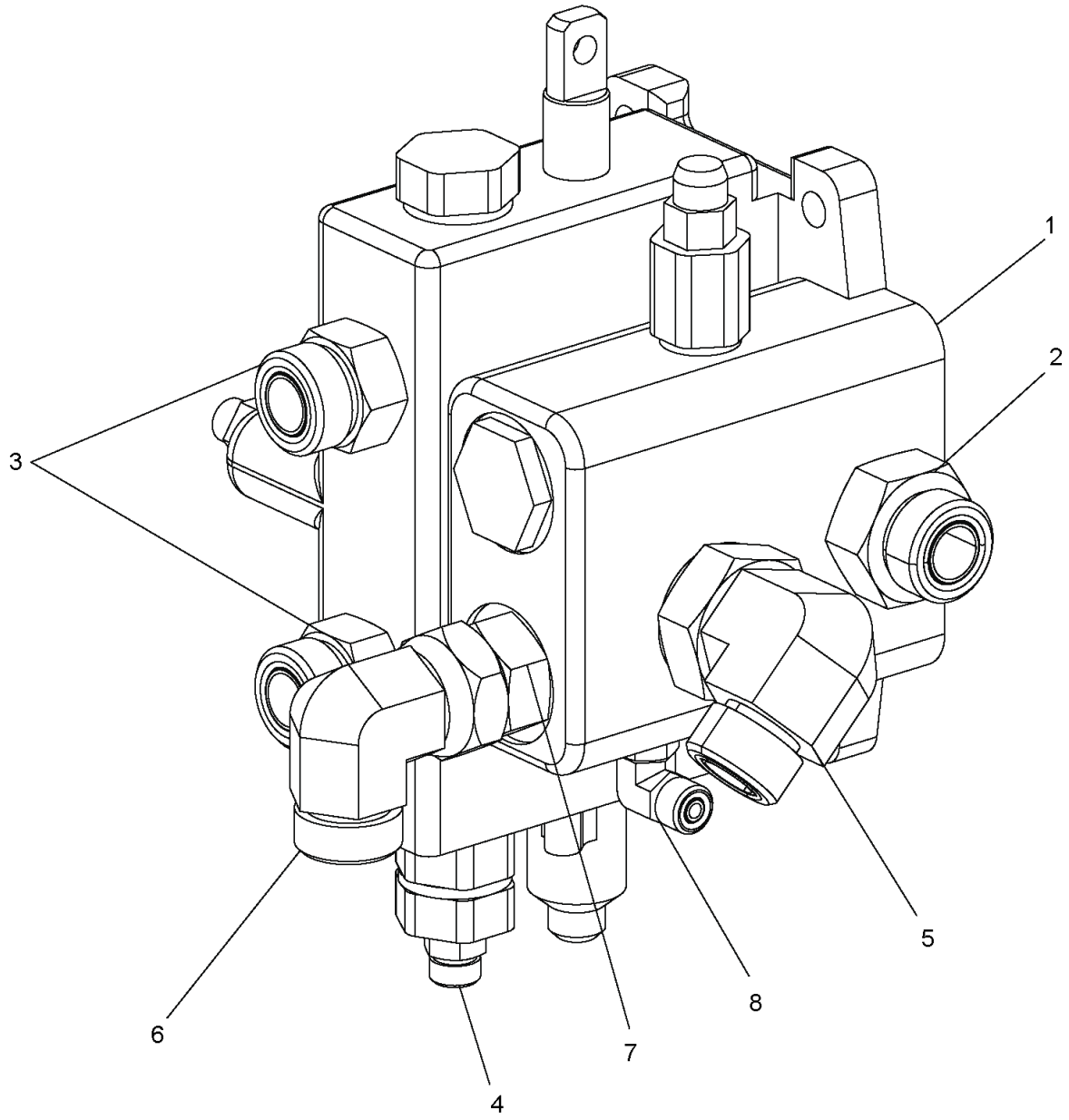

WHEN ORDERING PARTS, SPECIFY MODEL NUMBER, SERIAL NUMBER AND DESCRIPTION OF PARTS REQUIRED

REF	PART NO.	DESCRIPTION	QTY
	500-01827 (Rev. C)	*Valve SUBASSY, Winch*	
1	550-00420	Valve, Winch Control	1
2	513-70026	Adapter, MOFS-12/MORB-16	1
3	513-70023	Adapter, MOFS-12/MORB-12	2
4	513-20017	Adapter, MOFS-4/MORB-4	1
5	514-59023	Elbow 90 DEG, MOFS - 12 / MORB -16	1
6	514-67004	Elbow Swivel 90°	1
7	552-10287	Check Valve	1
8	514-52003	Elbow 90° STD-M#4 OFS	1

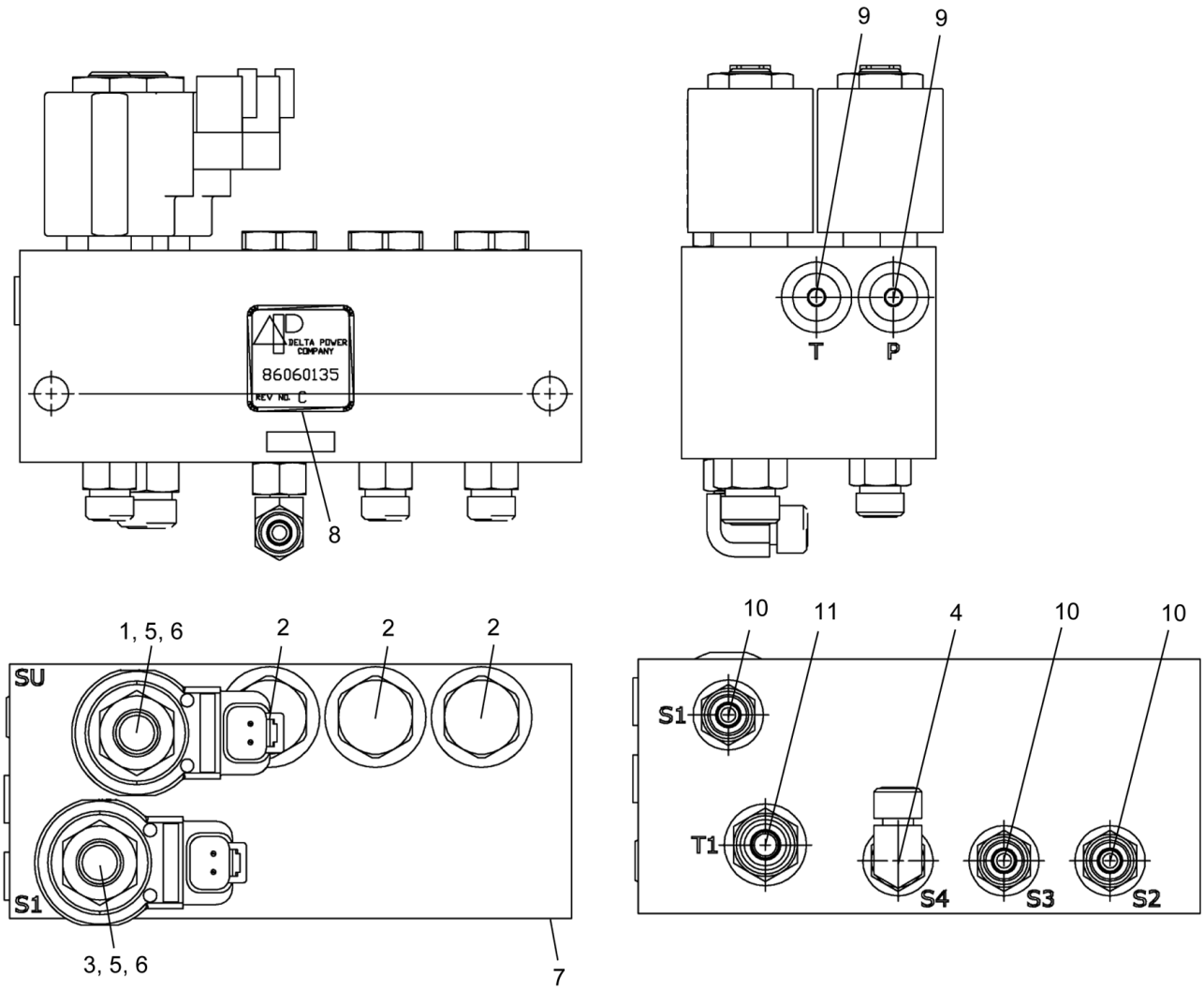

WHEN ORDERING PARTS, SPECIFY MODEL NUMBER, SERIAL NUMBER AND DESCRIPTION OF PARTS REQUIRED

REF	PART NO.	DESCRIPTION	QTY
	500-01828 (Rev. B)	*Valve ASSY, RCI*	
1	222903	2W N.O. Spool Valve	1
2	222904	Check Valve	3
3	222905	3W2P Spool Valve	1
4	514-52003	Elbow 90° STD-M#4 OFS	1
5	222906	12 VDC Coil	2
6	222907	Coil Nut	2
7	222908	Manifold	1
8	222909	Manifold Tag	1
9	517-30014	Plug, M#04 ORB INT HEX	2
10	513-20017	Adapter, MOFS-4/MORB-4	3
11	513-40014	Adapter, MOFS-6/MORB-6	1

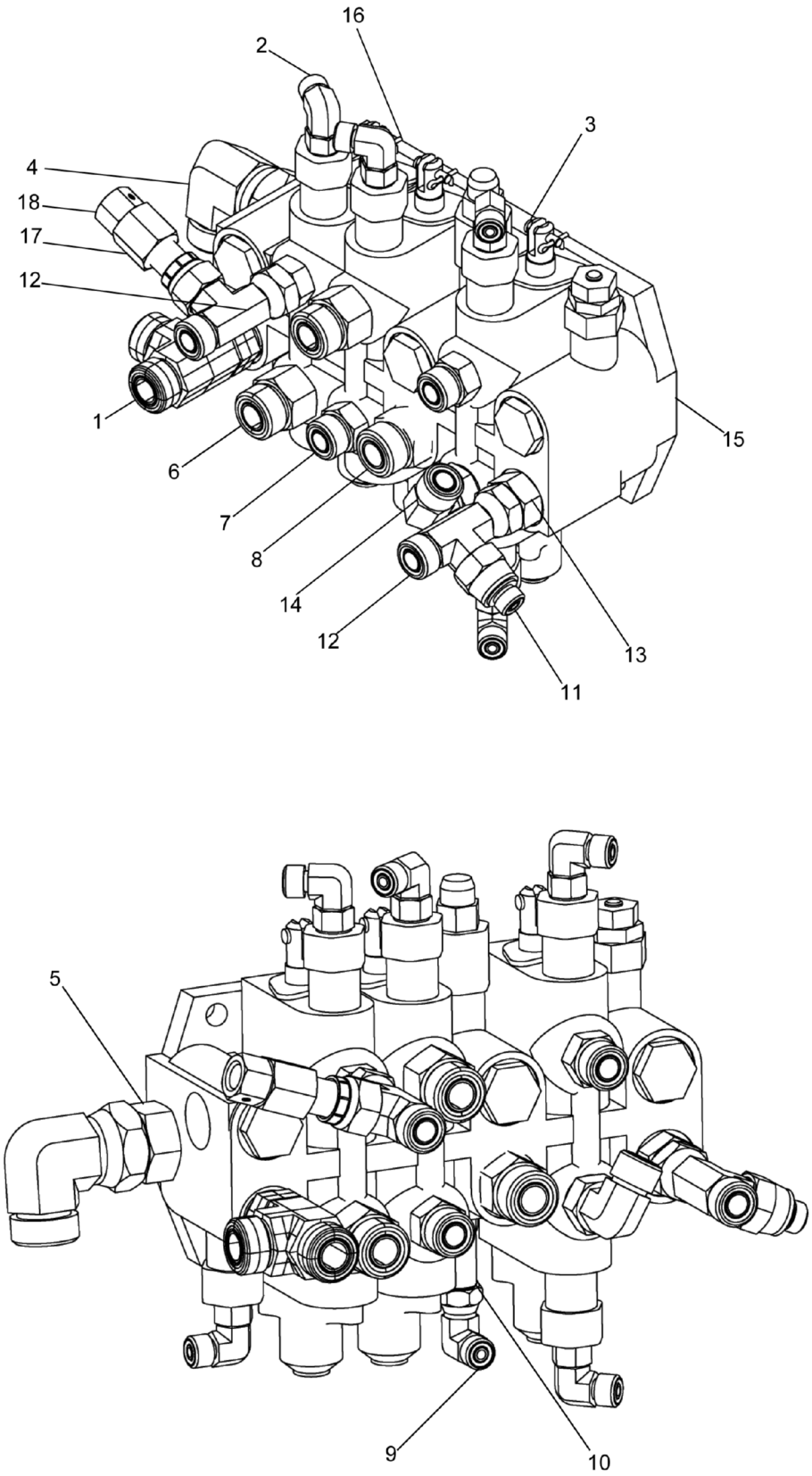

WHEN ORDERING PARTS, SPECIFY MODEL NUMBER, SERIAL NUMBER AND DESCRIPTION OF PARTS REQUIRED

REF	PART NO.	DESCRIPTION	QTY
	T105907 (Rev. D)	*Valve ASSY*	
1	516-86004	TEE, MOFS-10/MORB-10/MOFS-10	1
2	514-52003	Elbow 90° STD-M#4 OFS	5
3	870-00044	OBS-PIN, Clevis .19 x .75 LG	3
4	514-67004	Elbow Swivel 90°	1
5	513-70023	Adapter, MOFS-12/MORB-12	1
6	513-60012	Adapter, MOFS-10/MORB-8	2
7	513-50023	Adapter, MOFS-8/MORB-8	3
8	513-60008	Adapter, MORB-10/MOFS-10	1
9	513-62002	Elbow 90 M0.250FS X F0.25.FS SW	1
10	513-30003	Adapter, MOFS-4/MORB-4, L	1
11	513-50012	Reducer F#8 OFS X M#4 OFS	1
12	513-85004	Tee 2X M#8 OFS X F#8 ORB	2
13	513-50027	Adapter, MOFS-8/MORB-10	1
14	513-55011	90 Elbow M#8 OFS X M#8 ORB	1
15	T105856	Valve, Main Boom	1
16	224-01001	PIN, COTR .09X.5 Z (1207-3)	3
17	T107847	Connector, F08 OFS F04 NPTF	1
18	T109870	Fitting, Conversion Adapter	1

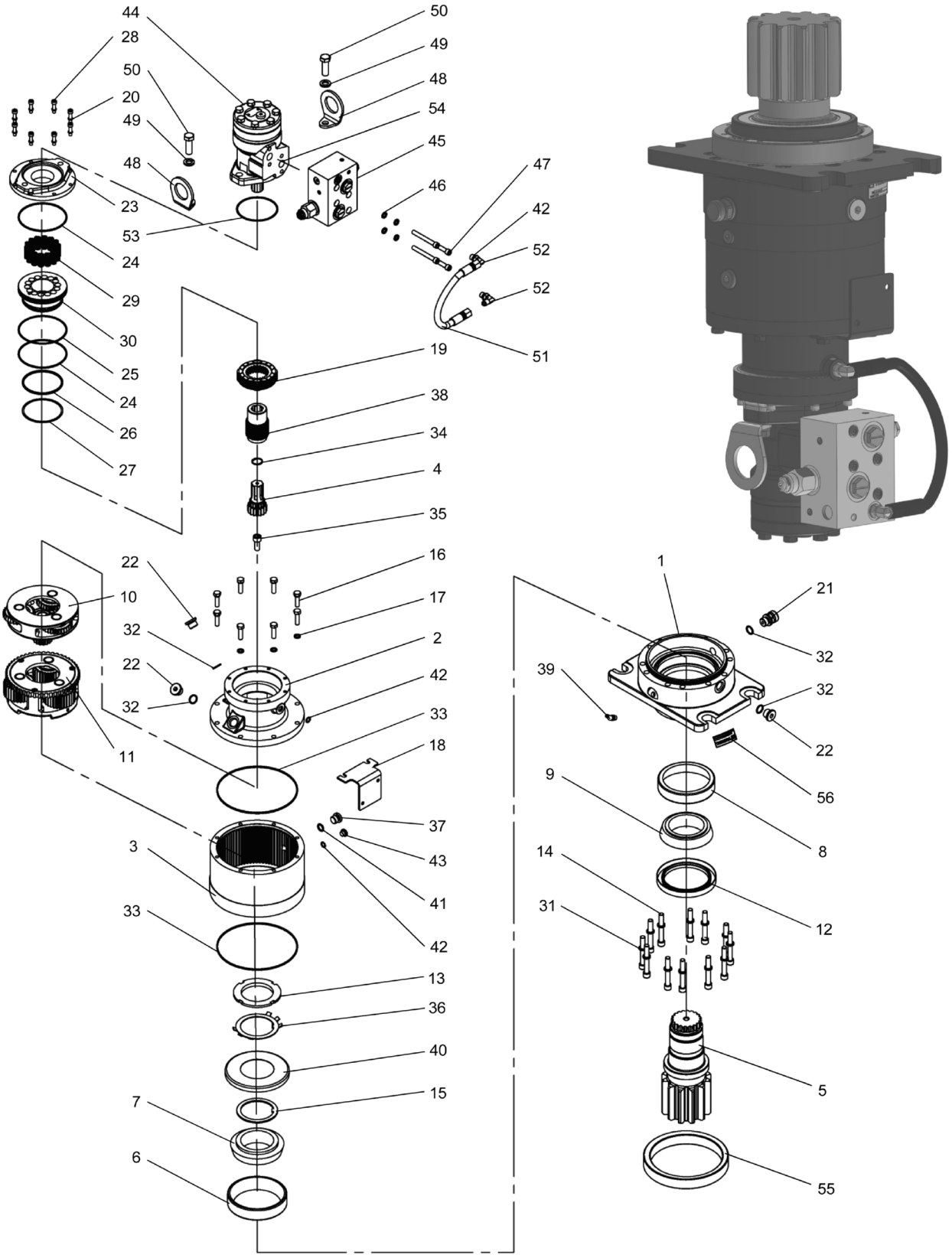

WHEN ORDERING PARTS, SPECIFY MODEL NUMBER, SERIAL NUMBER AND DESCRIPTION OF PARTS REQUIRED

LOAD KING BY CUSTOM TRUCK 1 SOURCE	**ROTATION GEARBOX ASSEMBLY (OMNIGEAR)**	DATE: Revised 05-2017	**CHAPTER**
		MODEL: 28-106	**1**
		PAGE: 120	

REF	PART NO.	DESCRIPTION	QTY
	T146435 (Rev. A)	*Swing Drive (Omnigear)*	
1	229608	Housing - HR	1
2	229609	End Cap Input - BK	1
3	229610	Gear, Ring 77T	1
4	229611	Gear Sun, Primary 16T	1
5	229612	Output Shaft Pinion 12T - G3	1
6	229613	Bearing Cup	1
7	229614	Bearing Cone	1
8	229615	Bearing Cup	1
9	229616	Bearing Cone	1
10	229617	Primary Carrier Sub-ASSY	1
11	229618	Secondary Carrier Sub-ASSY	1
12	229619	Oil Seal	1
13	229620	Lock Nut, M70X2	1
14	229621	Socket Head Capscrew. M10X1.25, GR10.9	12
15	229622	Spacer, Flat Tongued	1
16	229623	HEX Head Bolt, M8X1.25, GR.10.9	8
17	229596	Lock Washer, M8	8
18	229624	Bracket, Conditioner W.A.D	1
19	229625	Brake	1
20	229626	Spring Washer, M6	8
21	229627	Breather Plug, M18X1.5	1
22	229628	Flange Plug, M18X1.5	3
23	229629	Motor Adaptor - A1	1
24	229630	O-Ring	2
25	229631	Back Up Ring For O-Ring- 154	1
26	229632	O-Ring	1
27	229633	Back Up Ring For O-Ring- 237	1
28	229634	Socket Head ACP Screw, M6X1.0, GR.10.9	8
29	229635	Spring	14
30	229636	Hydraulic Piston	1
31	229637	Lock Washer, M10	12
32	229638	O-Ring (15.3 X 2.2)	4
33	229639	O-Ring (164.8 X 2.6)	2
34	229640	Retaining Ring, Internal, #22	1
35	229641	Socket Head Capscrew, M10X1.25, GR.8.8	1
36	229642	Lock Nut Washer, M70	1
37	229643	Flange Plug, 5/8"-18UNF	1
38	229644	Break Rotor	1
39	229645	Grease Zerk 1/8"-27 NPT	1
40	229647	Grease Shield	1
41	229648	Flange Plug, 7/16"-20UNF	1
42	229605	O-Ring	3
43	229649	O-Ring # 112	1
44	229594	Hydraulic Motor	1
45	229595	Manifold Assembly	1
46	229596	Lock Washer, M8	4
47	229597	Socket Head Capscrew M8X1.25X65	4
48	229598	Lift LUG	2
49	229599	Lock Washer, 1/2	2

WHEN ORDERING PARTS, SPECIFY MODEL NUMBER, SERIAL NUMBER AND DESCRIPTION OF PARTS REQUIRED

REF	PART NO.	DESCRIPTION	QTY
	T146435 (Rev. A)	*Swing Drive (Omnigear)*	
50	229600	Capscrew, 1/2" - 13UNC	2
51	229075	Hydraulic Hose	1
52	229602	Set. Thread Elbow	2
53	229603	O-Ring Hydraulic Port	2
54	229604	O-Ring, Motor Pilot	1
55	229606	Eccentric Ring	1
56	229076	ID Tag	1

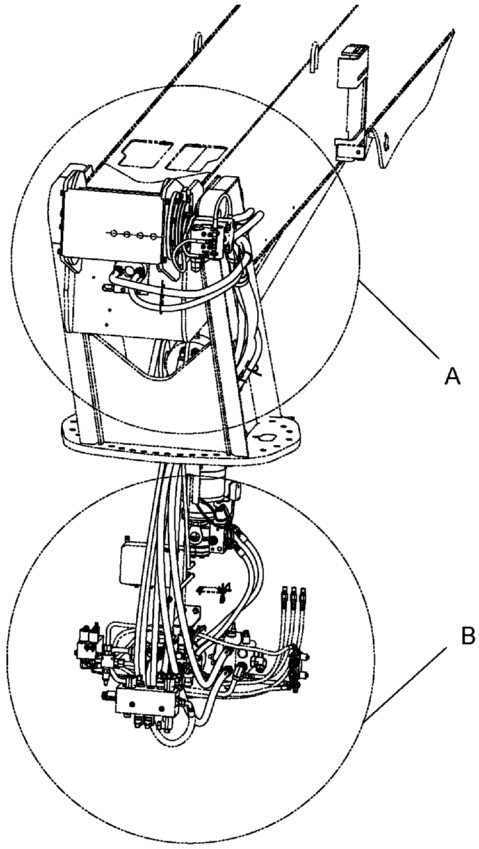

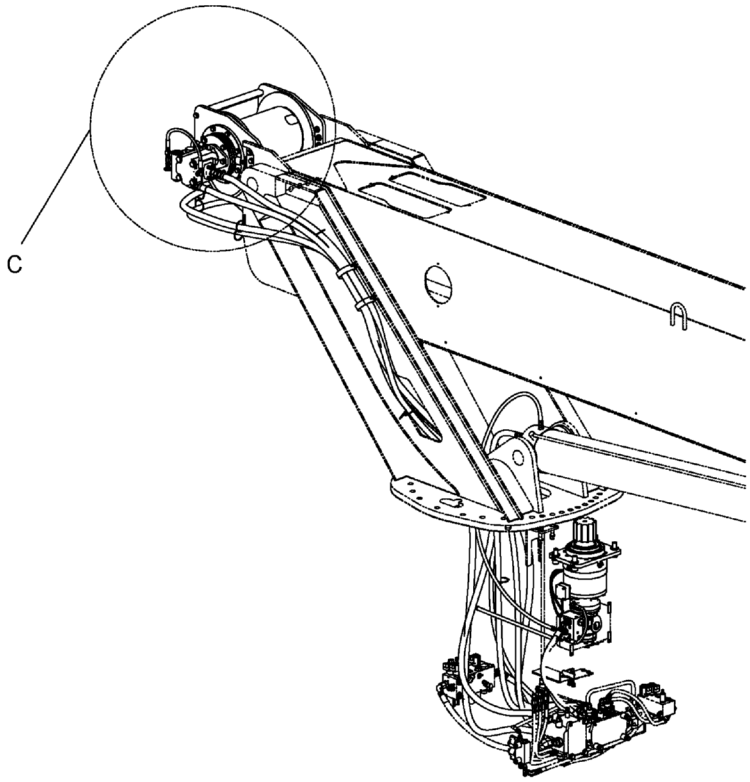

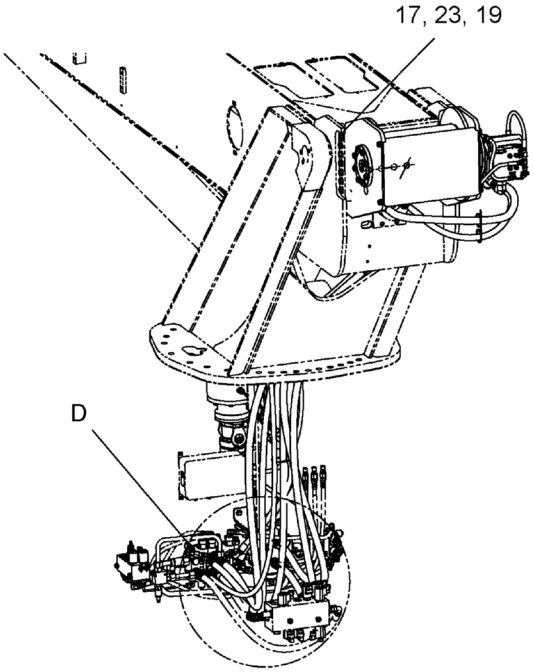

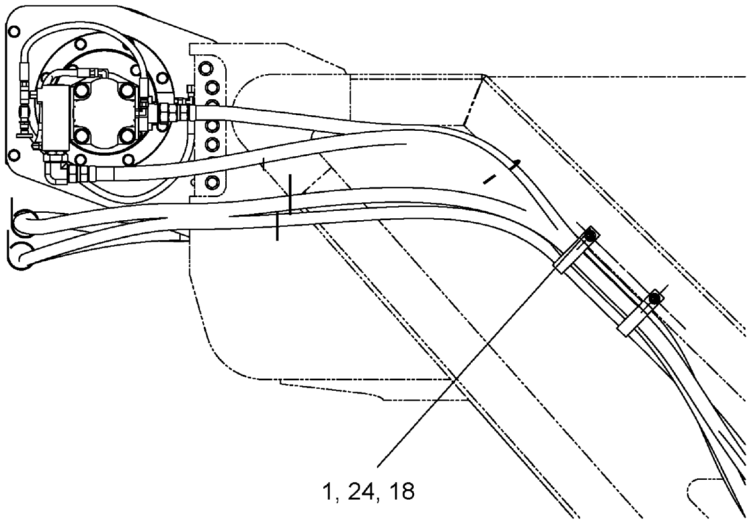

WHEN ORDERING PARTS, SPECIFY MODEL NUMBER, SERIAL NUMBER AND DESCRIPTION OF PARTS REQUIRED

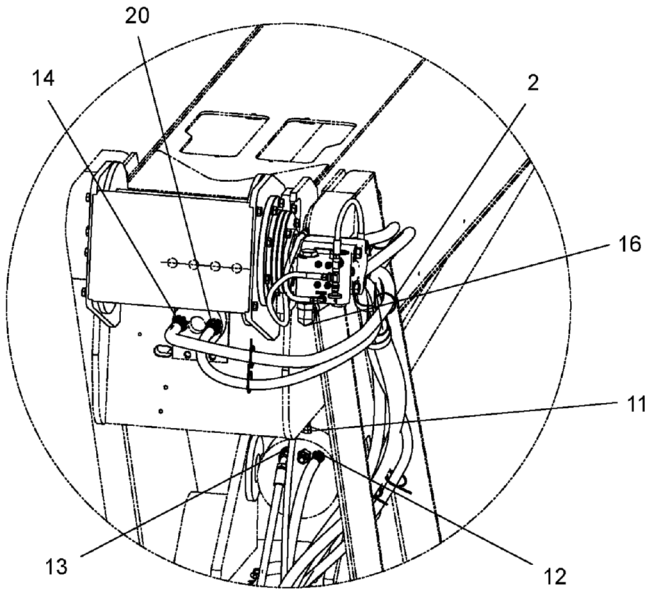

DETAIL A

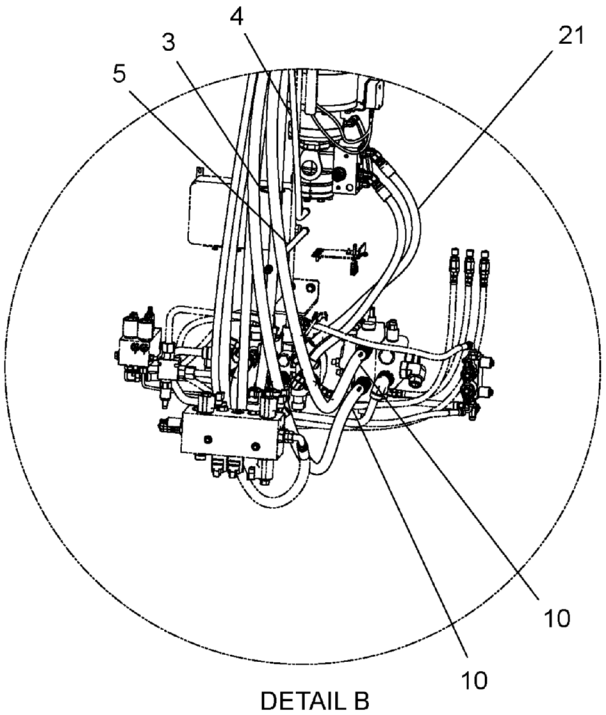

DETAIL B

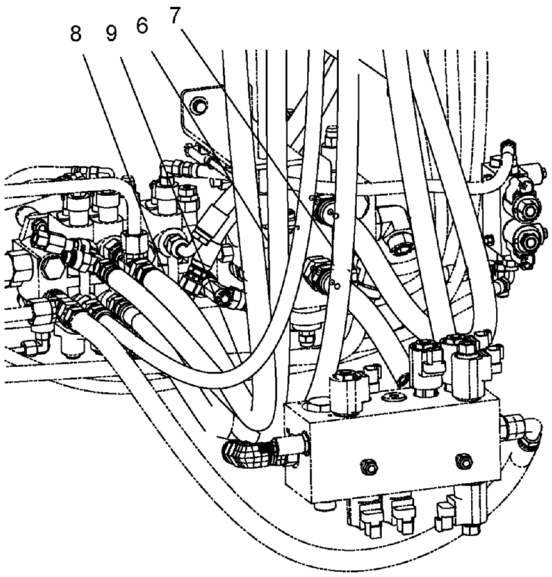

DETAIL D

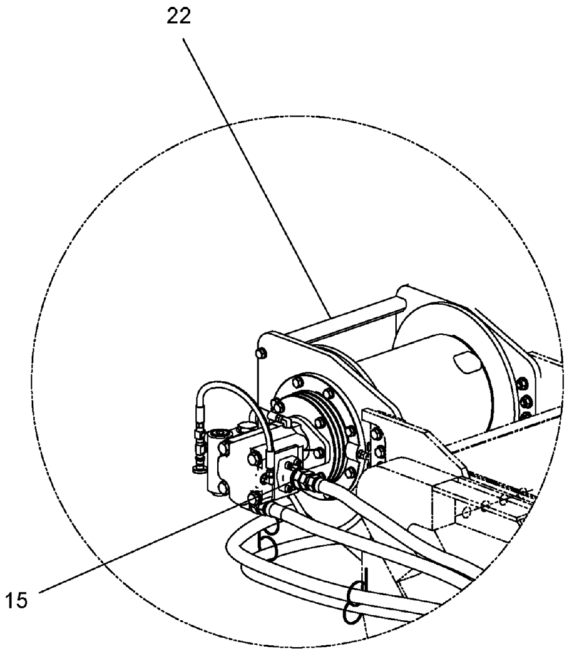

DETAIL C

WHEN ORDERING PARTS, SPECIFY MODEL NUMBER, SERIAL NUMBER AND DESCRIPTION OF PARTS REQUIRED

REF	PART NO.	DESCRIPTION	QTY
	T118030 (Rev. F)	*HYD INSTL, NONCON COMB Flow Winch*	
1	200B2007-32	Clamp, 3.00 ARDEN #COV 4917	2
2	400-15086	Tie, Nylon CBL, 1.75 DIA	8
3	400-15088	Ties, Cable / Hose	8
4	502-11350	Hose, HYD, RCL	1
5	502-11351	Hose, HYD RCL Topping Rod Base	1
6	502-30792	Hose, ASSY, TELE Retract	1
7	502-30793	Hose, Boom Topping Retract	1
8	502-35093	Hose, Boom Extend	1
9	502-35094	Hose ASSY, Boom Topping Extend	1
10	502-41020	Hose ASSY, Winch-12	2
11	513-20019	Adapter, MOFS-4/MORB-6	1
12	513-50023	Adapter, MOFS-8/MORB-8	1
13	513-60008	Adapter, MORB-10/MOFS-10	1
14	513-60015	Adapter, MOFS-10/MORB-12	1
15	513-70026	Adapter, MOFS-12/MORB-16	1
16	514-59023	Elbow 90 DEG, MOFS - 12 / MORB -16	1
17	NTP-500C000-25	Nut, HEX TPLCK 0.50-13,ST SQC G5	14
18	NYL-375C000-25	Nut, HEX NYL-INS 0.375-16, ST Z G5	2
19	S01-500CB25-Y8	SCR, HHCS 0.50-13X2.25, ST SQC G8	14
20	T107850	Fitting, STR080FS120RB	1
21	T133371	Hose, -8, 4000, FOFS-8SW/FOFS-8SW90, 700	1
22	T146992	Winch	1
23	WAH-50NX000-Y2	WSH, FL HRD A-NRW 0.50, ST YZ	28
24	WAN-37NX000-20	WSH, FL TYPA-NRW 0.375, ST Z	2

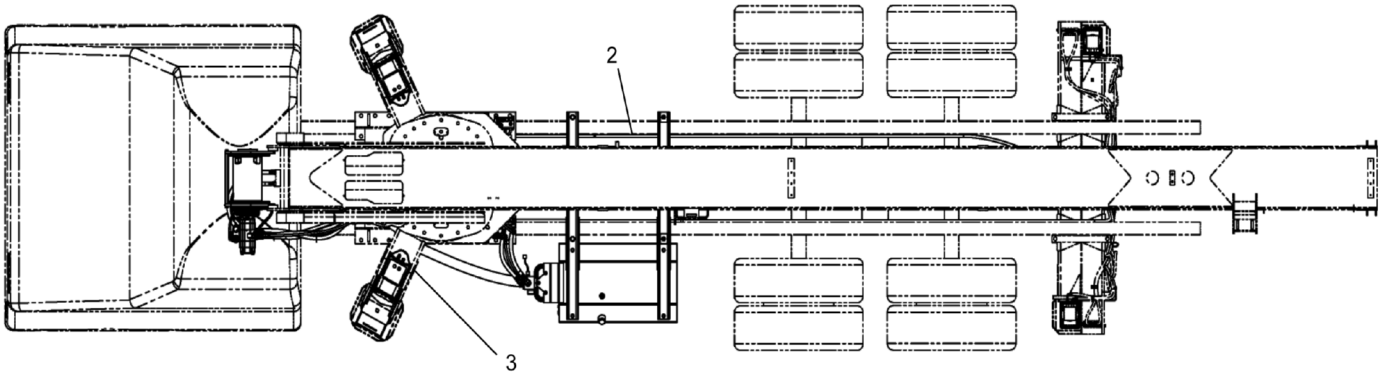
2
3

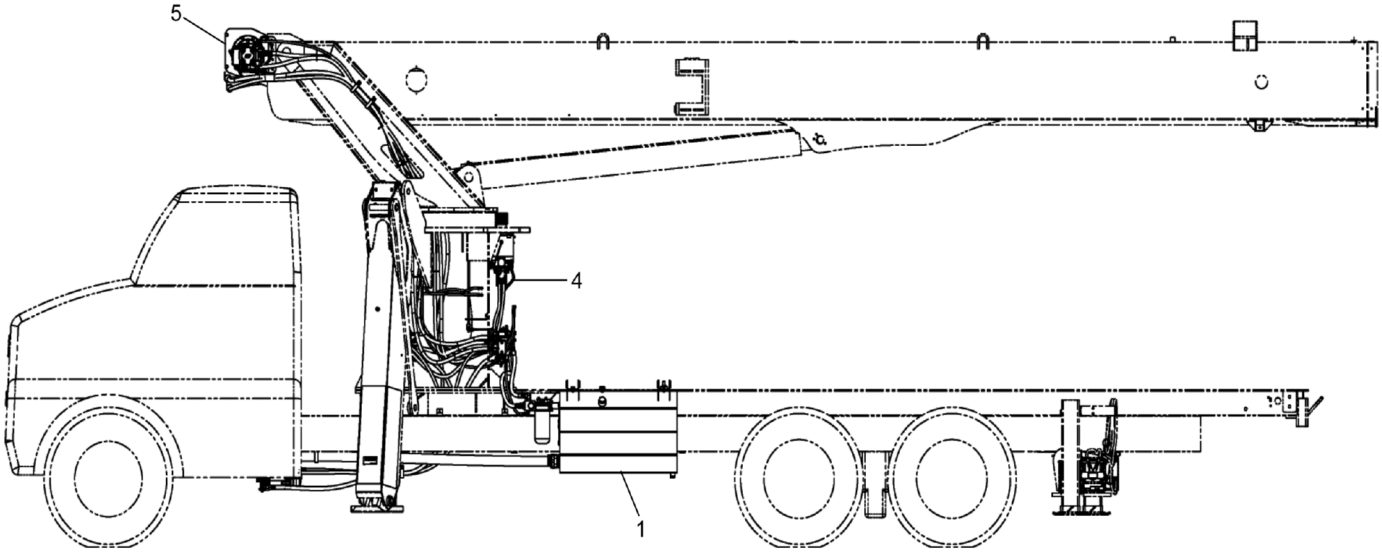
5
4
1

REF	PART NO.	DESCRIPTION	QTY
	T118785 (Rev. A)	*HYD INSTL, NONCON - MS WINCH*	
1	**500-01847-01**	Hydraulic Installation, Pump/Tank (see page 92)	1
2	**500-01848-01**	HYD INSTL, AUX Outrigger (see page 100)	1
3	**500-01849-01**	HYD INSTL, Main Outrigger (see page 102)	1
4	**T117825**	INSTL, Mainframe-Console (see page 128)	1
5	**T118031**	HYD INSTL, NONCON MS Winch (see page 135)	1

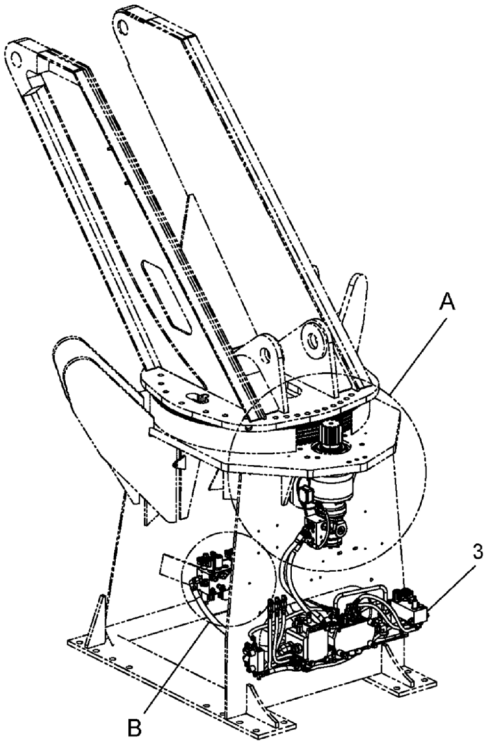

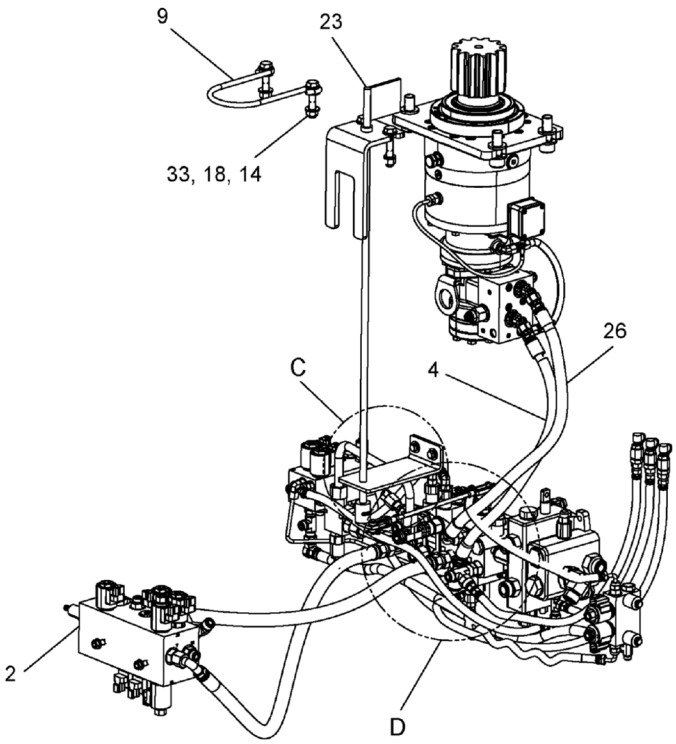

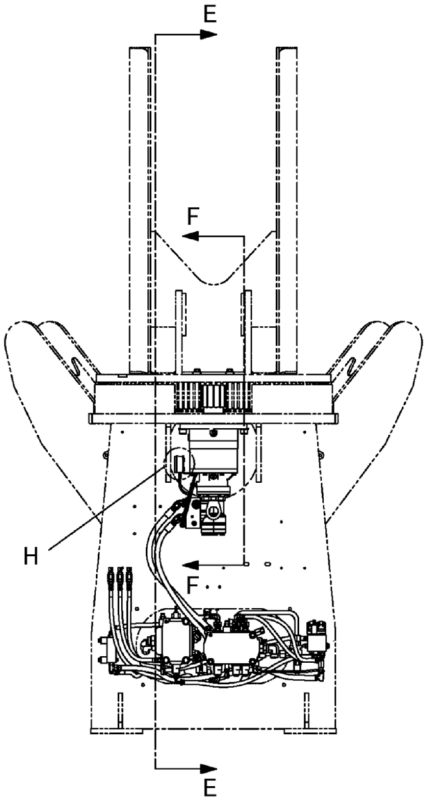

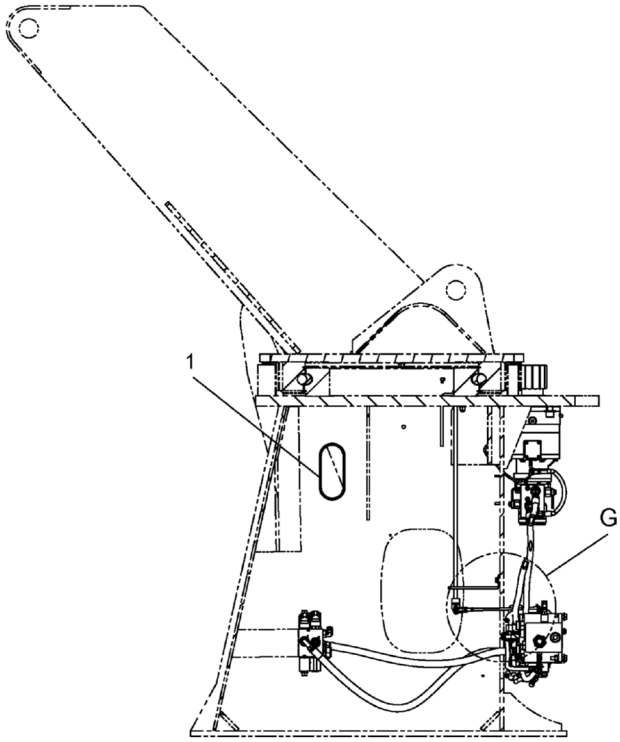

SECTION E - E

WHEN ORDERING PARTS, SPECIFY MODEL NUMBER, SERIAL NUMBER AND DESCRIPTION OF PARTS REQUIRED

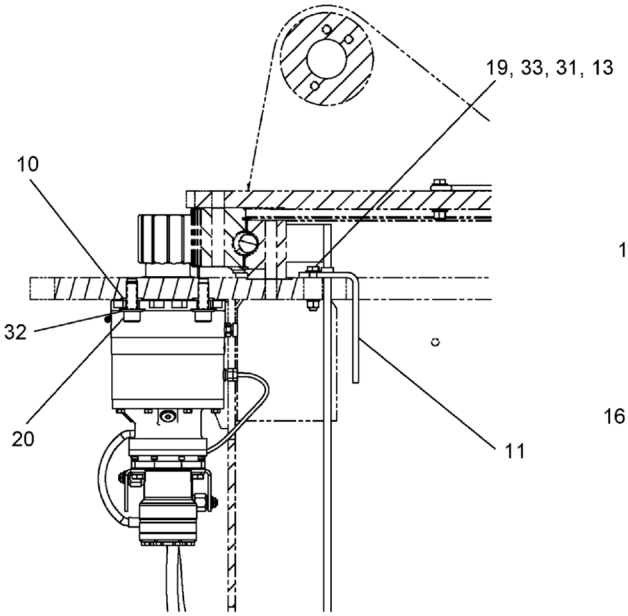

SECTION F - F

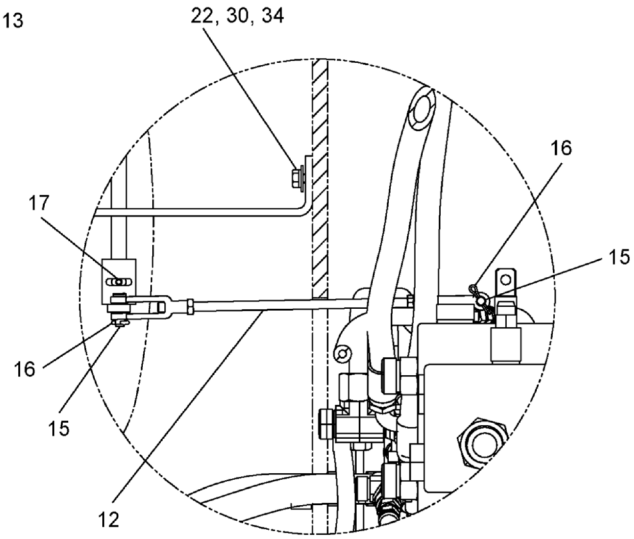

DETAIL G

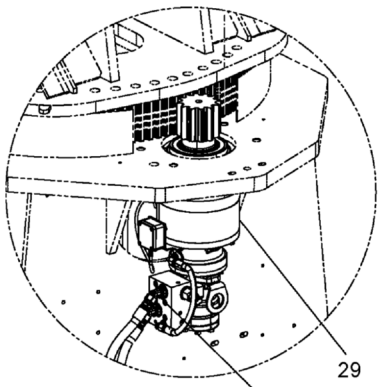

DETAIL A

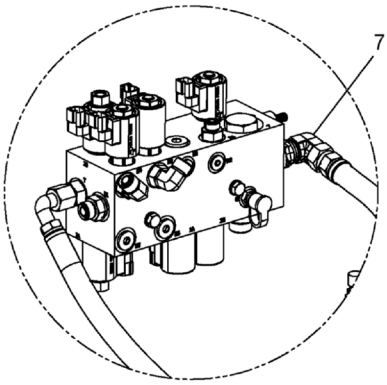

DETAIL B

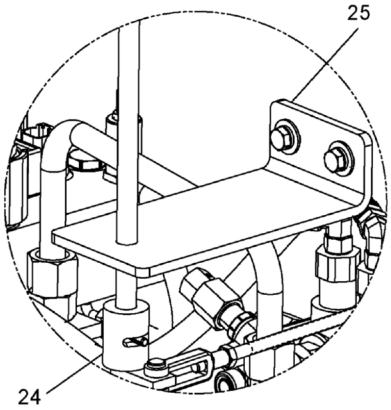

DETAIL C

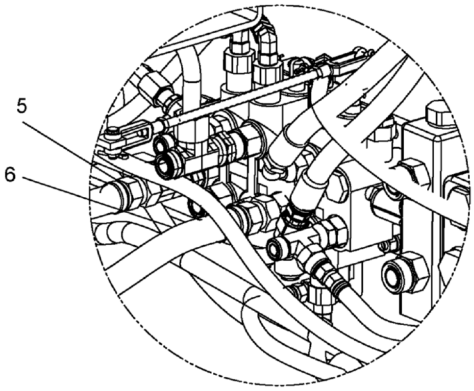

DETAIL D

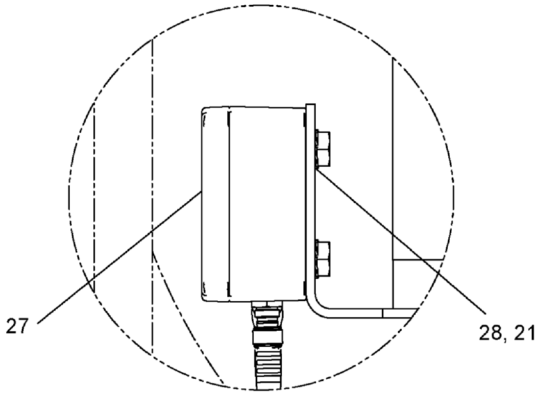

DETAIL H

REF	PART NO.	DESCRIPTION	QTY
	T117825 (Rev. C)	*INSTL, Mainframe-Console*	
1	12169-20	Flex Trim 3/8" X 18" Long	2
2	**500-01851**	ASSY, Main Outrigger Valve (see page 108)	1
3	**500-01852-04**	HYD INSTL, Console MS Winch (see page 131)	1
4	502-30779	Hose, Swing-Drive	1
5	502-35082	Hose, Outrigger Return	1
6	502-35091	Hose OR PB-Boom	1
7	514-66004	Elbow 90 M#10 OFS X F#10 OFS	1
8	515-05005	45 Elbow #8 OFS X #10 ORB	2
9	770-02831	Bracket, House Guide	1
10	781-00336	Boss, 1.38 X 0.813 X 0.16	4
11	789-06007	Swivel, Stop Arm	1
12	806-00246	Swing K/O Lock(01141)	1
13	N04-500C000-25	Nut, HEX 0.50 - 13, ST Z GR5	2
14	NYL-500C000-25	Nut, HEX NYL - INS 0.50-13, ST Z G5	2
15	P01-312XA00-P0	Pin, Clevis 0.3125 X 1.00, STL	2
16	P02-125X750-20	Pin, Cotter 0.125 X 0.75, ST SQC	2
17	P22-188XA50-GP	Pin, Spring SLTD 0.1875 X 1.50, ST	1
18	S01-500CB50-25	SCR, HHCS 0.50-13X2.50, ST Z GR5	2
19	S01-500CB75-25	SCR, HHCS 0.50-13X2.75, ST Z GR5	2
20	S14-750CB00-H2	SCR, SHCS 0.75 - 10 X 2.00, ST Z	4
21	SHF-250C625-25	SCR, HHCS FT 0.25-20 X 0.625, ST SQC G5	2
22	SHF-312C750-25	SCR, HHCS FT 0.312-18 X 0.75, ST SQC G5	2
23	T109850	Flag WELD, Swing Stop	1
24	T110499	Swing Stop Weldment	1
25	T118589	Bracket	1
26	T133371	Hose, -8, 4000, FOFS-8SW/FOFS-8SW90, 700	1
27	T145537	Wad Sensor	1
28	T145587	Washer, Lock, External Tooth, 0.25	2
29	**T146435**	Swing Drive (Omnigear) (see page 120)	1
30	W07-312X000-20	WSH, LCK, MED SPLT 0.3125, ST SQC	2
31	W07-500X000-20	WSH, LCK, MED SPLT 0.50, ST Z	2
32	WAH-75NX000-Y2	WSH, FL HRD A-NRW 0.75, ST YZ	4
33	WAN-50NX000-20	WSH, FL TYPA-NRW 0.50, ST Z	8
34	WBR-31RX875-20	WSH, FL TYPB-REG 0.3125, ST Z	2

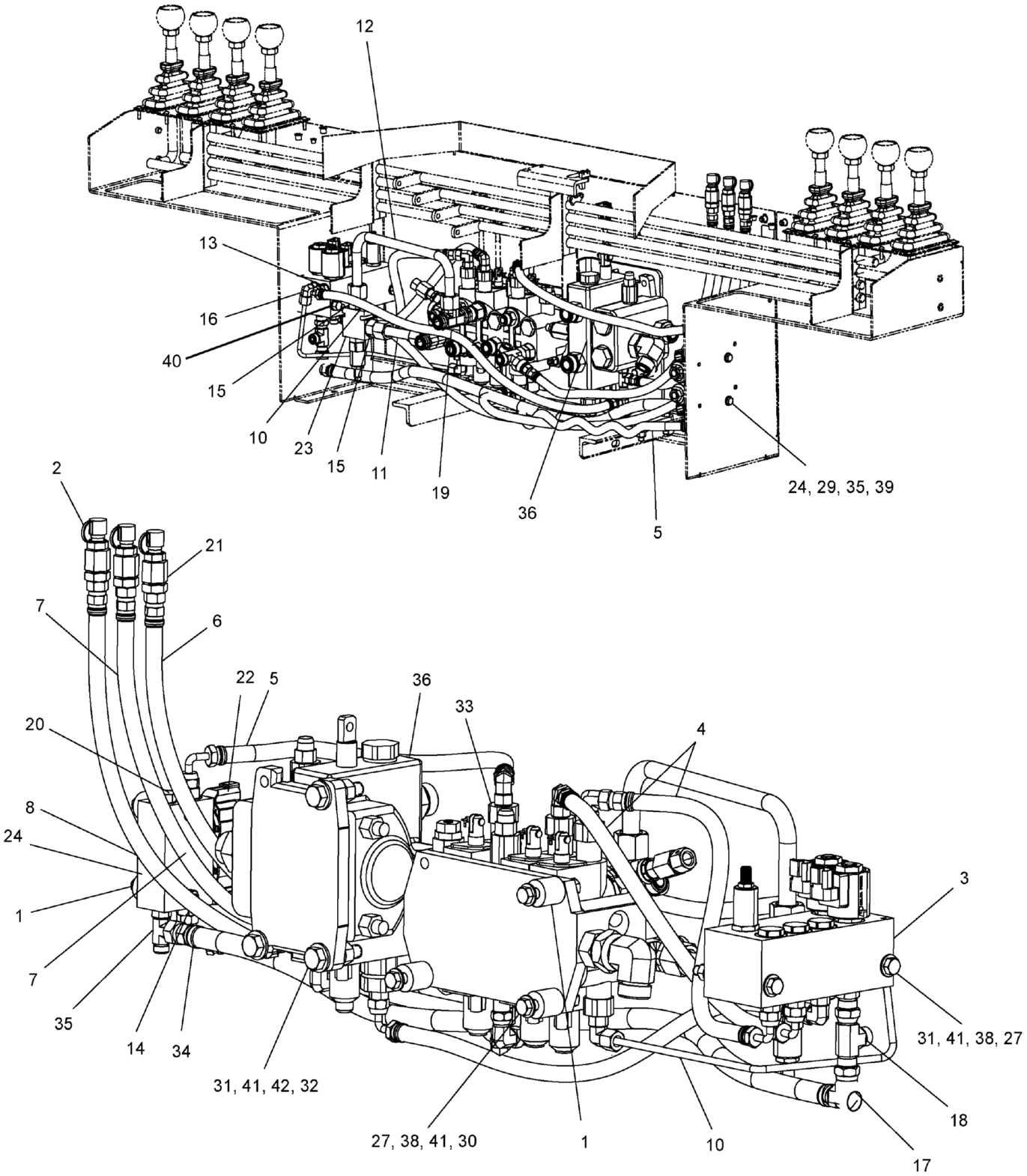

WHEN ORDERING PARTS, SPECIFY MODEL NUMBER, SERIAL NUMBER AND DESCRIPTION OF PARTS REQUIRED

REF	PART NO.	DESCRIPTION	QTY
	500-01852-04 (Rev. E)	*HYD INSTL, Console MS Winch*	
1	001-20057	Spacer, CYL 0.406 X 1.00 X 1.00	5
2	12019-558	Dust Cap, HQC-4	3
3	**500-01828**	Valve ASSY, RCI (see page 116)	1
4	502-11325	Hose, LMI-Boom Topping	2
5	502-11327	Hose, LMI Winch Raise Unloadng	3
6	502-11330	Hose, Swing Test Port	1
7	502-11331	Hose, Winch Test Port	1
8	502-11332	Hose, Main Valve Test Port	1
9*	502-11333	Hose, 2SP Motor Shift	1
10	510-20465	PB Pilot Drain	1
11	510-60022	Tube, Tele Relief, 0.625 DIA	1
12	510-60023	Tube, Tele Relief, 0.625 DIA	1
13	513-20017	Adapter, MOFS-4/MORB-4	1
14	513-20019	Adapter, MOFS-4/MORB-6	2
15	513-60012	Adapter, MOFS-10/MORB-8	2
16	514-52003	Elbow 90° STD-M#4 OFS	1
17	514-64002	Elbow 90°, Swivel, -6	1
18	516-84003	Tee, MOFS-6/FOFS-6SW/MOFS-6	1
19	516-86002	Tee, MOFS-10/FOFS-10SW/MOFS-10	1
20	517-30001	Plug, HEX Head 0.50	1
21	518-20013	Parker # PD 346	3
22	551-10154	Valve, Dual Pilot ELEC	1
23	559-00262	Valve, Relief	1
24	7073910	Valve Body	1
25*	809-00520	BRKT, Valve MTG	1
26*	N04-250C000-25	Nut, HEX 0.25-20, ST SQC G5	2
27	N04-375C000-25	Nut, HEX 0.375-16, ST Z GR5	5
28*	N04-500C000-25	Nut, HEX 0.50 - 13, ST Z GR5	3
29	S01-250CC00-25	SCR, HHCS 0.25-20 X 3.00, ST Z GR5	2
30	S01-375CB50-25	SCR, HHCS 0.375-16 X 2.50, ST SQC G5	3
31	S01-375CD00-25	SCR, HHCS 0.375-16 X 4.00, ST SQC G5	2
32	S01-500CB00-25	SCR, HHCS 0.50-13X2.00, ST Z GR5	3
33	**T105907**	Valve ASSY (see page 118)	1
34	T107878	Hose HYD, Drain/Return	1
35	T117449	Tee, MOFS-6/MORB-6/MOFS-6	1
36	**T150361**	Valve SUBASSY, Winch (see page 133)	1
37*	W07-250X000-20	Washer, LCK, MED SPLT 0.25, ST SQC	2
38	W07-375X000-20	WSH, LCK, MED SPLT 0.375, ST Z	5
39	W07-500X000-20	WSH, LCK, MED SPLT 0.50, ST Z	3
40	WAN-25NX000-20	WSH, FL TYPA-NRW 0.25, ST Z	2
41	WAN-37NX000-20	WSH, FL TYPA-NRW 0.375, ST Z	5
42	WAN-50NX000-20	WSH, FL TYPA-NRW 0.50, ST Z	3

* ITEM NOT SHOWN IN ILLUSTRATION

WHEN ORDERING PARTS, SPECIFY MODEL NUMBER, SERIAL NUMBER AND DESCRIPTION OF PARTS REQUIRED

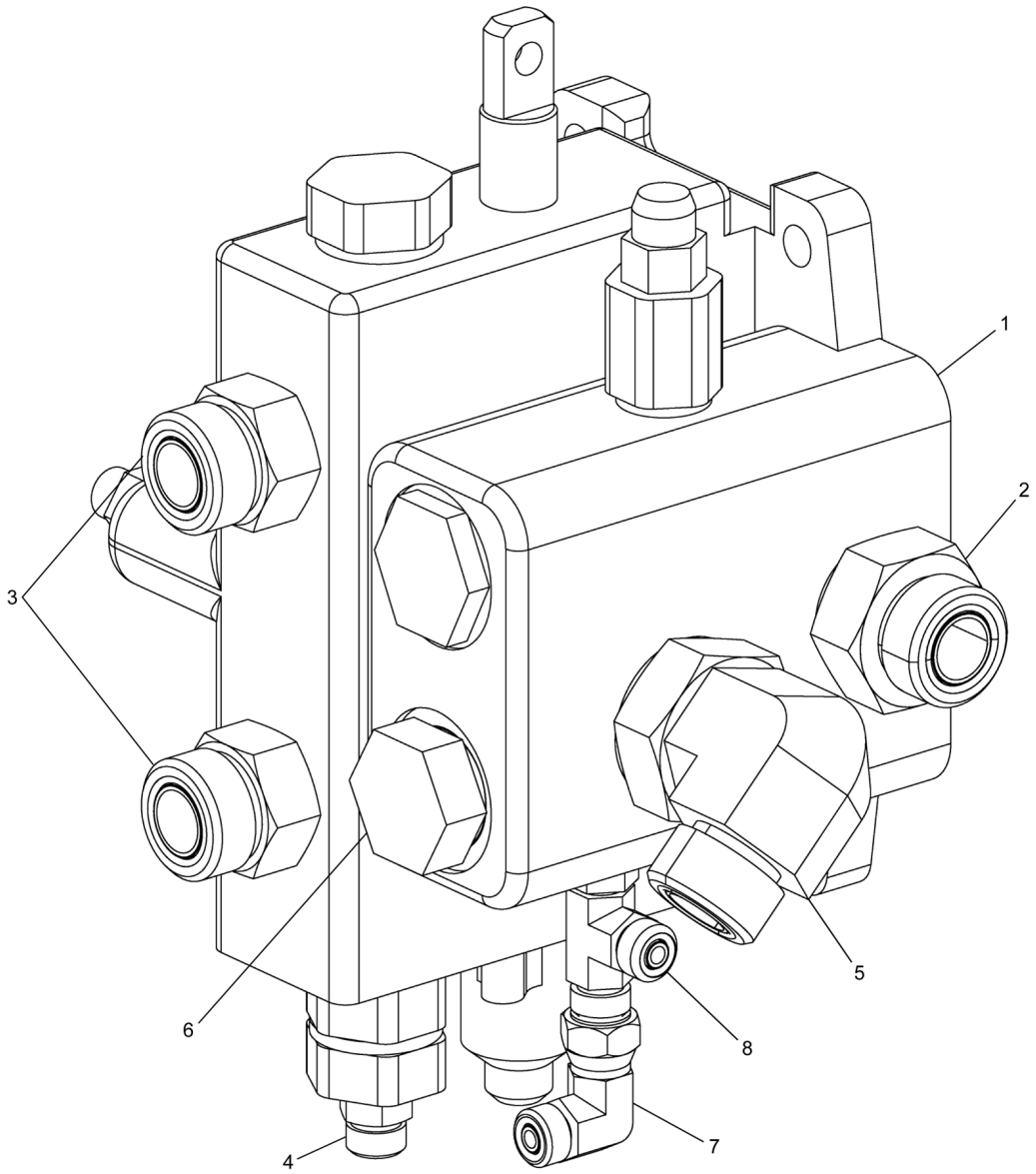

WHEN ORDERING PARTS, SPECIFY MODEL NUMBER, SERIAL NUMBER AND DESCRIPTION OF PARTS REQUIRED

LOAD KING BY CUSTOM TRUCK 1 SOURCE	**VALVE SUBASSEMBLY, WINCH**	DATE: Released 11-2017	**CHAPTER**
		MODEL: 28-106	**1**
		PAGE: 133	

REF	PART NO.	DESCRIPTION	QTY
	T150361 (Rev. A)	*Valve SUBASSY, Winch*	
1	550-00420	Valve, Winch Control	1
2	513-70026	Adapter, MOFS-12/MORB-16	1
3	513-70023	Adapter, MOFS-12/MORB-12	2
4	513-20017	Adapter, MOFS-4/MORB-4	1
5	514-59023	Elbow 90 DEG, MOFS - 12 / MORB -16	1
6	517-30004	Plug, HEXHD 0.75 - F3N-E4S	1
7	514-62002	Elbow 90º M0.250FS X F0.250FS SW	1
8	516-82006	Tee, MOFS-4/MORB-4/MOFS-4	1

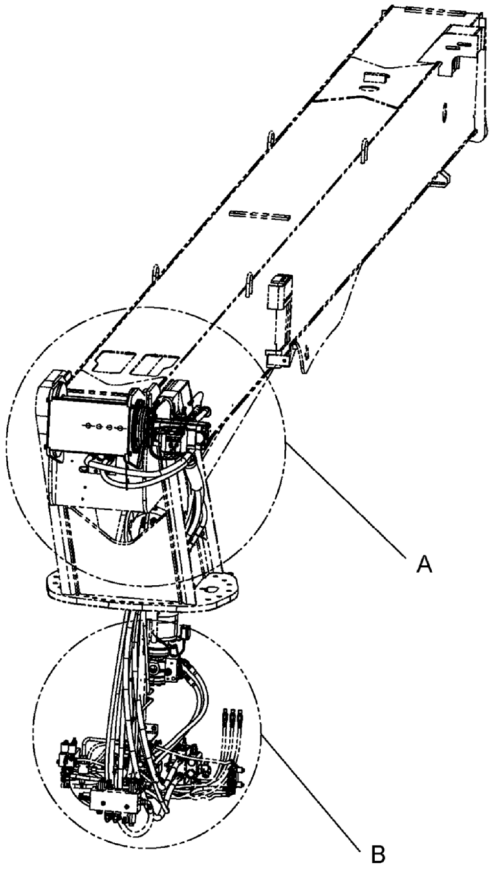

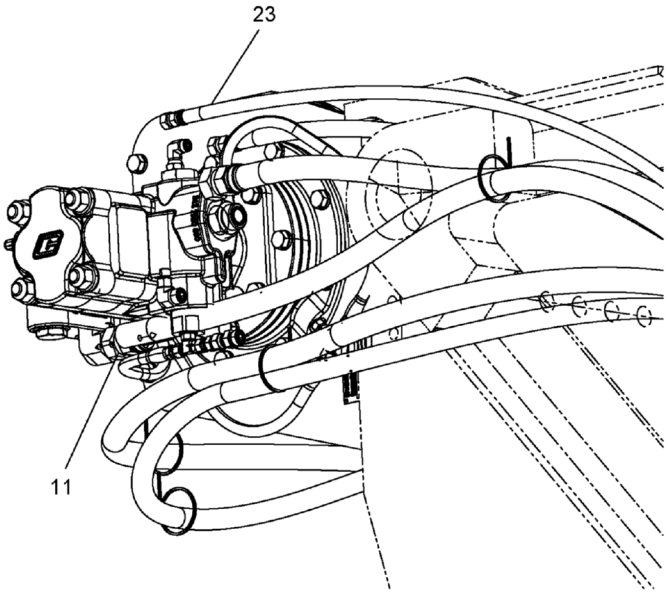

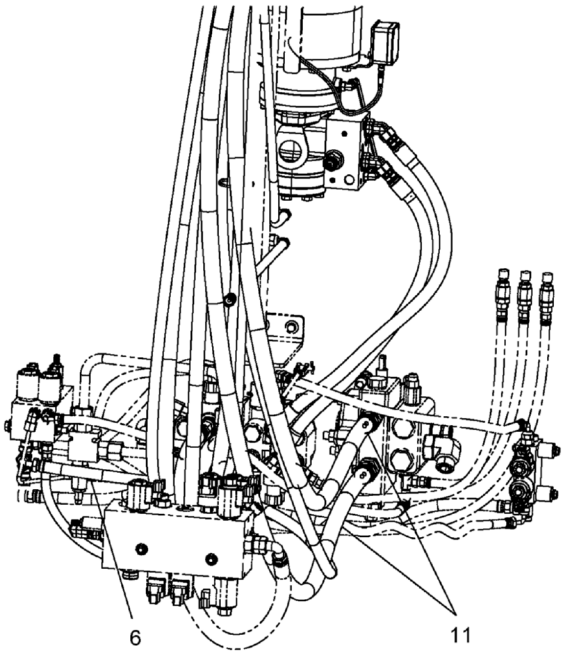

DETAIL B

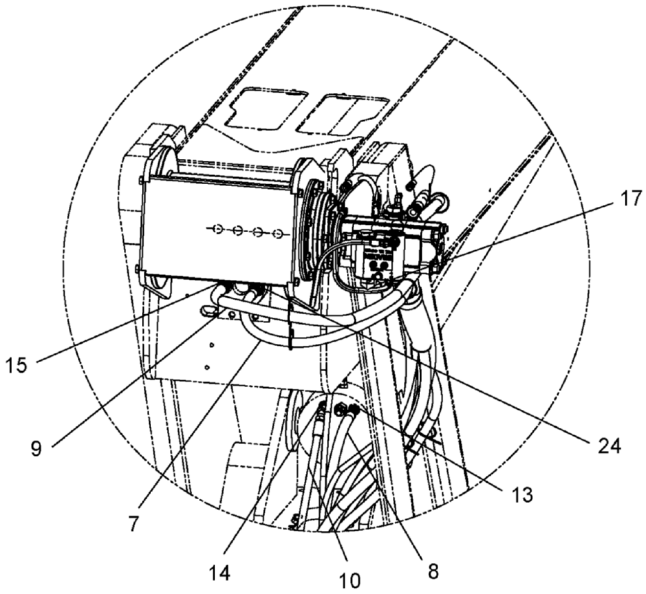

DETAIL A

WHEN ORDERING PARTS, SPECIFY MODEL NUMBER, SERIAL NUMBER AND DESCRIPTION OF PARTS REQUIRED

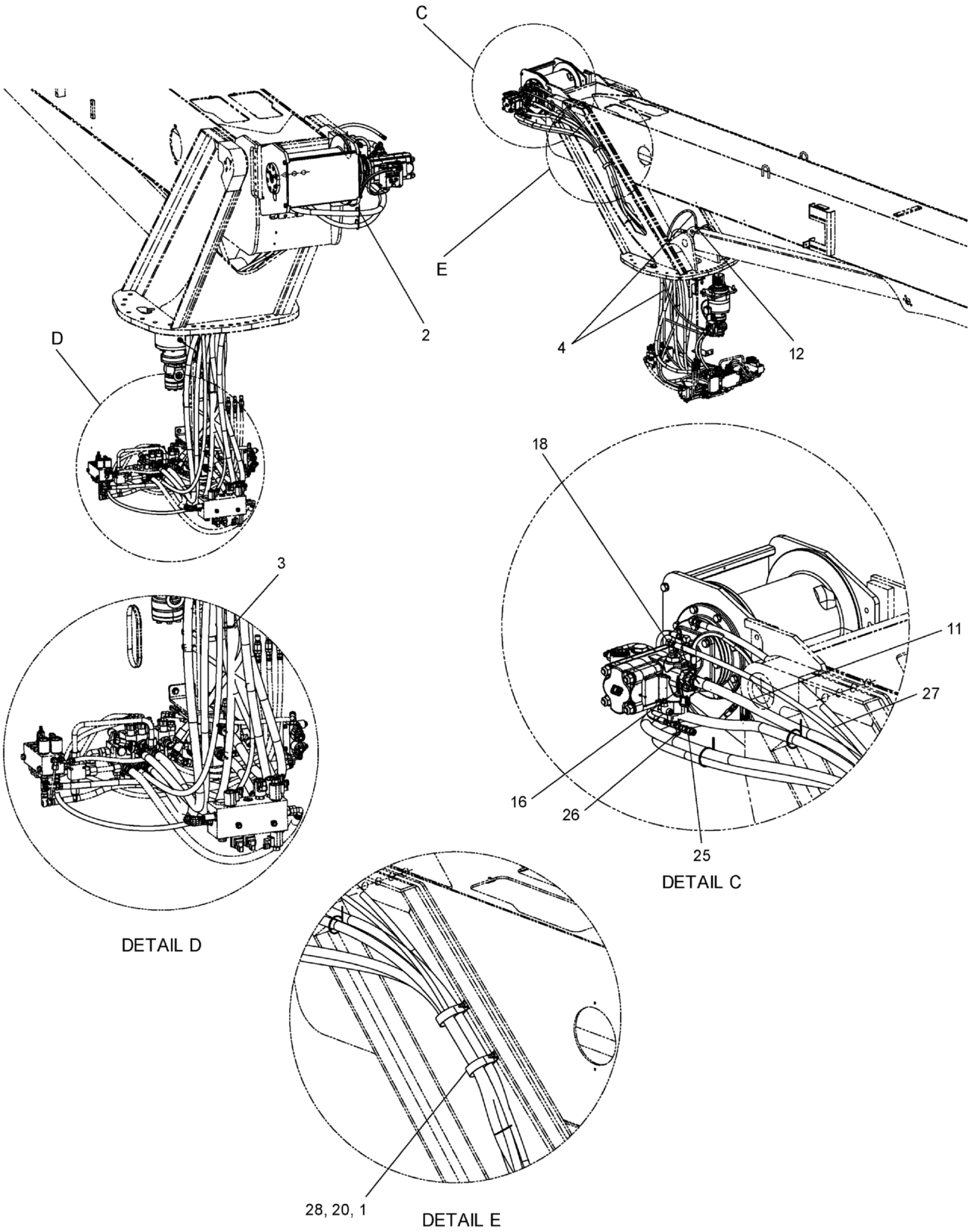

WHEN ORDERING PARTS, SPECIFY MODEL NUMBER, SERIAL NUMBER AND DESCRIPTION OF PARTS REQUIRED

REF	PART NO.	DESCRIPTION	QTY
	T118031 (Rev. E)	*HYD INSTL, NONCON MS Winch*	
1	200B2007-32	Clamp, 3.00 ARDEN #COV 4917	2
2	400-15086	Tie, Nylon CBL, 1.75 DIA	8
3	400-15088	Ties, Cable / Hose	8
4	502-11350	Hose, HYD, RCL	1
5*	502-11351	Hose, HYD RCL Topping Rod Base	1
6	502-21030	Hose, Winch Motor Drain	1
7	502-30792	Hose, ASSY, TELE Retract	1
8	502-30793	Hose, Boom Topping Retract	1
9	502-35093	Hose, Boom Extend	1
10	502-35094	Hose ASSY, Boom Topping Extend	1
11	502-41020	Hose ASSY, Winch-12	2
12	513-20019	Adapter, MOFS-4/MORB-6	1
13	513-50023	Adapter, MOFS-8/MORB-8	1
14	513-60008	Adapter, MORB-10/MOFS-10	1
15	513-60015	Adapter, MOFS-10/MORB-12	1
16	513-70026	Adapter, MOFS-12/MORB-16	1
17	514-59023	Elbow 90 DEG, MOFS - 12 / MORB -16	1
18	514-62002	Elbow 90º M0.250FS X F0.250FS SW	1
19*	770-02831	Bracket, House Guide	1
20	NYL-375C000-25	Nut, HEX NYL-INS 0.375-16, ST Z G5	2
21*	NYL-500C000-25	Nut, HEX NYL - INS 0.50-13, ST Z G5	2
22*	S01-500CB50-25	SCR, HHCS 0.50-13X2.50, ST Z GR5	2
23	**T106045**	Winch ASSY (Braden) (see page 138)	1
24	T107850	Fitting, STR080FS120RB	1
25	T107985	Fitting, Adaptor	1
26	T107986	Fitting, Reducer	1
27	T107988	Hose ASSY, 2SP Pilot	1
28	WAN-37NX000-20	WSH, FL TYPA-NRW 0.375, ST Z	2
29*	WAN-50NX000-20	WSH, FL TYPA-NRW 0.50, ST Z	8

* ITEM NOT SHOWN IN ILLUSTRATION

WHEN ORDERING PARTS, SPECIFY MODEL NUMBER, SERIAL NUMBER AND DESCRIPTION OF PARTS REQUIRED

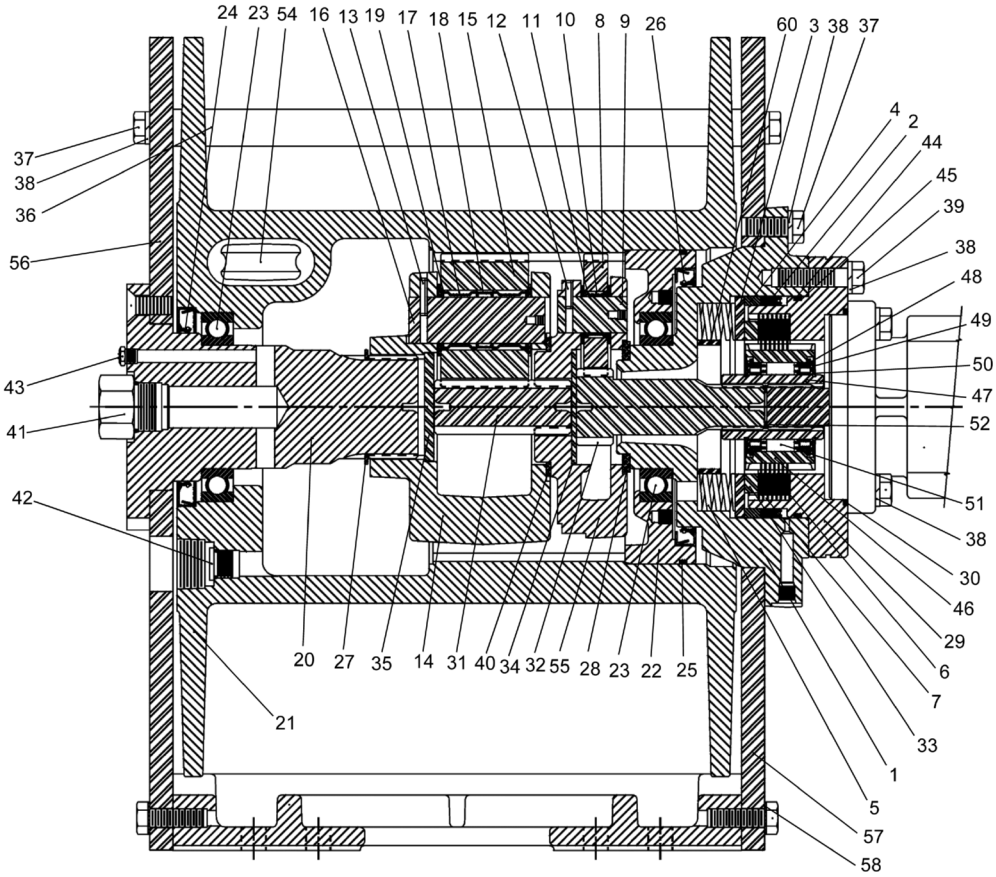

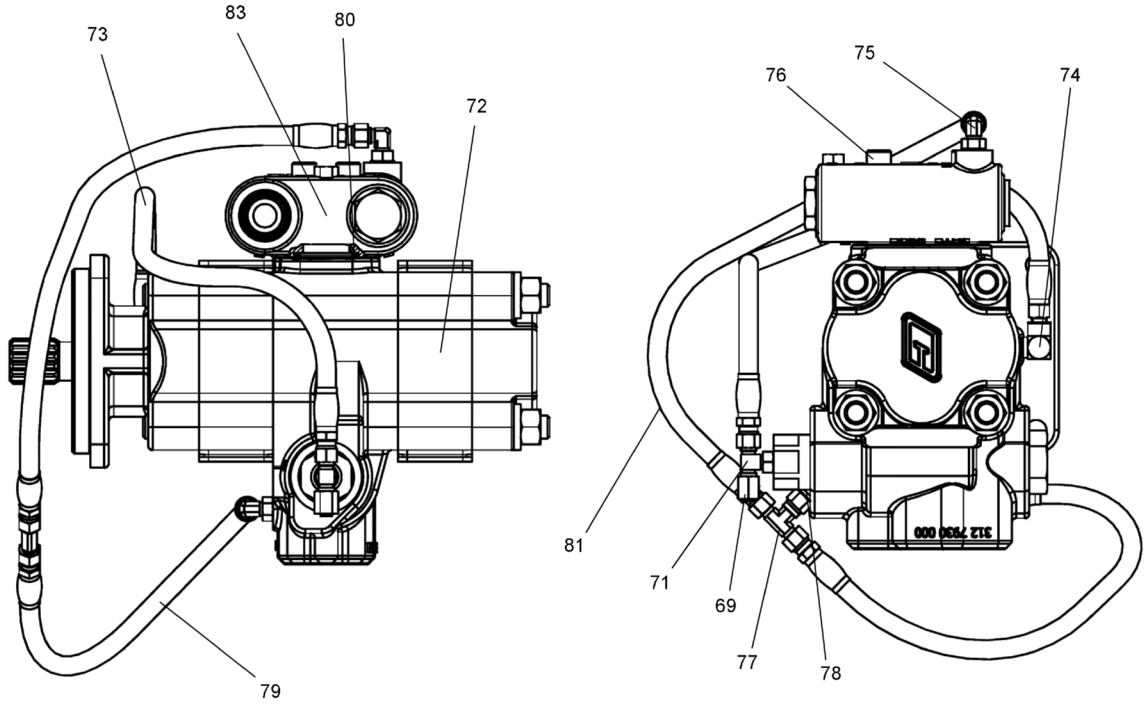

WHEN ORDERING PARTS, SPECIFY MODEL NUMBER, SERIAL NUMBER AND DESCRIPTION OF PARTS REQUIRED

REF	PART NO.	DESCRIPTION	QTY
	T106045 (Rev. A)	*Winch ASSY (Braden)*	
1	215418	Brake Cylinder	1
2	215419	Seal	1
3	215420	Pressure Plate	1
4	215421	Piston Backup Ring	1
5	215422	Die Spring	12
6	215423	850170 Disc-Friction	7
7	215424	Brake Disk	8
8	224968	Planet Gear	3
9	215427	Primary Planet Gear Shaft	3
10	215428	Roller Bearing	3
11	215429	Thrust Washer	6
12	215430	Spirol Pin	3
13	218982	Pin-Spirol	3
14	224969	Output Planet Carrier	1
15	224970	Planet Gear	3
16	215433	Planet Gear Shaft	3
17	215434	Roller Bearing	6
18	215435	Bearing Spacer	3
19	215436	Thrust Washer	6
20	224971	Bearing Support, SP Only	1
21	224972	Cable Drum	1
22	224973	Cable Drum Closure	1
23	215440	Ball Bearing	2
24	215441	Oil Seal	1
25	224974	O-Ring	1
26	215443	Seal-Oil	1
27	215444	Retaining Ring, External	1
28	215445	Thrust Washer	1
29	224378	Motor Support	1
30	215465	O-Ring	1
31	224975	Output Sun Gear	1
32	224976	Primary Sun Gear	1
33	215450	Spacer	1
34	215451	Spacer, Primary	1
35	215474	Spacer, Output	1
36	224977	Spacer	2
37	220135	Capscrew	20
38	215470	Lockwasher	16
39	224379	Capscrew	4
40	215455	Thrust Washer	1
41	224978	Plug	1
42	215457	16496-8 Plug, O-Ring Flush	1
43	215458	Relief Valve 7.5-15 PSI	1
44	215459	O-Ring	1
45	215460	Back-Up Ring	1
46	215461	Outer Brake Race	1
47	224376	Inner Brake Race	1
48	215723	Sprag Bearing	2
49	215557	Thrust Bearing	2

* ITEM NOT SHOWN IN ILLUSTRATION

WHEN ORDERING PARTS, SPECIFY MODEL NUMBER, SERIAL NUMBER AND DESCRIPTION OF PARTS REQUIRED

REF	PART NO.	DESCRIPTION	QTY
	T106045 (Rev. A)	*Winch ASSY (Braden)*	
50	215725	21-B3-1 Snap Ring	2
51	215466	Sprag Clutch	1
52	215560	Retaining Ring	1
53*	215468	Shipping Plug HYD	1
54	215473	Cable Wedge	1
55	224979	Primary Planet Carrier	1
56	224980	Sideplate Support End	1
57	224981	Sideplate Motor End	1
58	224982	Lockwasher Kev *1	8
59*	224983	Cover, Back PD12C	1
60	218782	Spring Spacer	1
61*	215553	Sprag Clutch ASSY (C SPL Shaft)	1
62*	224984	Primary Planet Carrier ASSY	1
63*	224985	Output Planet Carrier ASSY	1
64*	224377	Brake CYL ASSY - 4 Bolt C	1
65*	215495	Pipe Plug	1
66*	218655	Drive Screw	4
67*	225013	Nameplate, CE	1
68*	225012	Seal Kit	1
69	225011	16445-4 Cap Nut	1
70*	225010	Warning Tag	1
71	225009	Tee, -4 ORB	1
72	225008	HYD Motor, Gear	1
73	225007	Hose ASSY	1
74	225006	Reducer Elbow	1
75	215526	Elbow Fitting	2
76	215524	Capscrew	4
77	218755	Swivel Tee	1
78	215527	Adapter	1
79	218757	Hose ASSY	1
80	219465	O-Ring	1
81	219757	Hose ASSY	1
82*	225005	HYD Motor Sub ASSY (2SP 4.9/2)	1
83	224999	Brake Valve ASSY - 1.25-61	1
84*	224997	Brake Valve Housing	1
85*	215481	Spool	1
86*	215482	Damper Piston	1
87*	215486	Check Valve Spring	1
88*	224998	Valve Spring Retainer	1
89*	215479	Spring Retainer	1
90*	215480	Plug	1
91*	215483	O-Ring	3
92*	225000	Check Valve Poppet	1
93*	215485	Pilot Orifice	1
94*	215487	Spool Spring	1
95*	215488	O-Ring	1
96*	215489	O-Ring	1
97*	215490	O-Ring	1
98*	215491	Back-up Ring	1

* ITEM NOT SHOWN IN ILLUSTRATION

WHEN ORDERING PARTS, SPECIFY MODEL NUMBER, SERIAL NUMBER AND DESCRIPTION OF PARTS REQUIRED

REF	PART NO.	DESCRIPTION	QTY
	T106045 (Rev. A)	*Winch ASSY (Braden)*	
99*	215492	Back-up Ring	1
100*	215468	Shipping Plug HYD	1
101*	225001	Shipping Plug	1
102*	225002	Shim, Valve Spring	2
103*	225003	HEX Head Plug(-4 SAE)	1

* ITEM NOT SHOWN IN ILLUSTRATION

WHEN ORDERING PARTS, SPECIFY MODEL NUMBER, SERIAL NUMBER AND DESCRIPTION OF PARTS REQUIRED

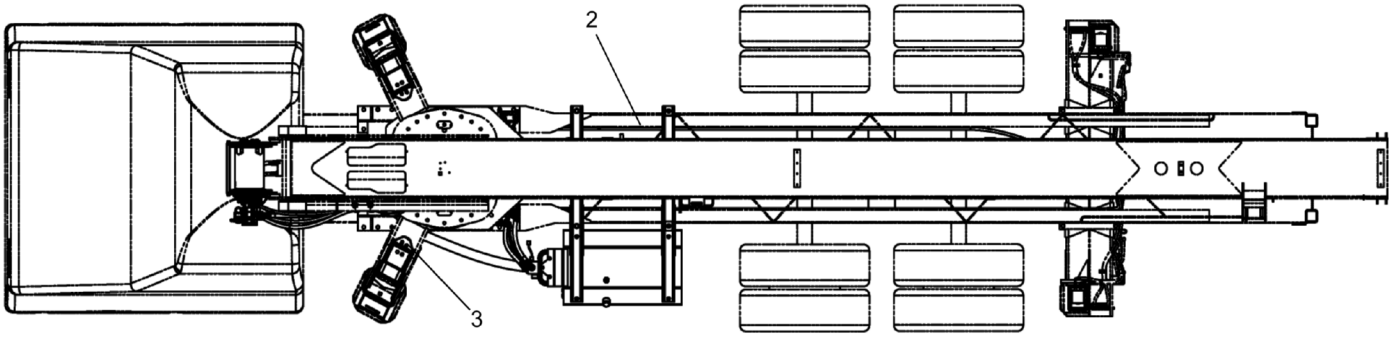
2
3

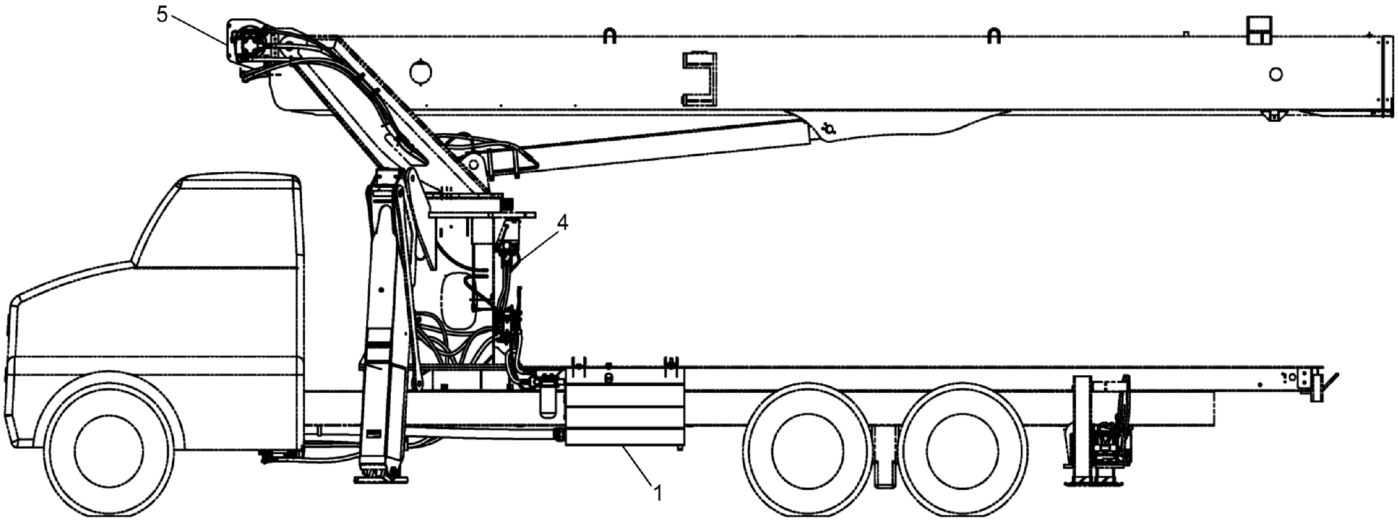
5
4
1

REF	PART NO.	DESCRIPTION	QTY
	T118786 (Rev. A)	*HYD INSTL, CONROT - CF WINCH*	
1	**500-01847-03**	HYD INSTL, Pump / Tank CF CONROT (see page 144)	1
2	**500-01848-01**	HYD INSTL, AUX Outrigger (see page 100)	1
3	**500-01849-01**	HYD INSTL, Main Outrigger (see page 102)	1
4	**T117826**	HYD INSTL, Mainframe-Console (see page 148)	1
5	**T118032**	CONROT, Combined Flow Winch (see page 153)	1

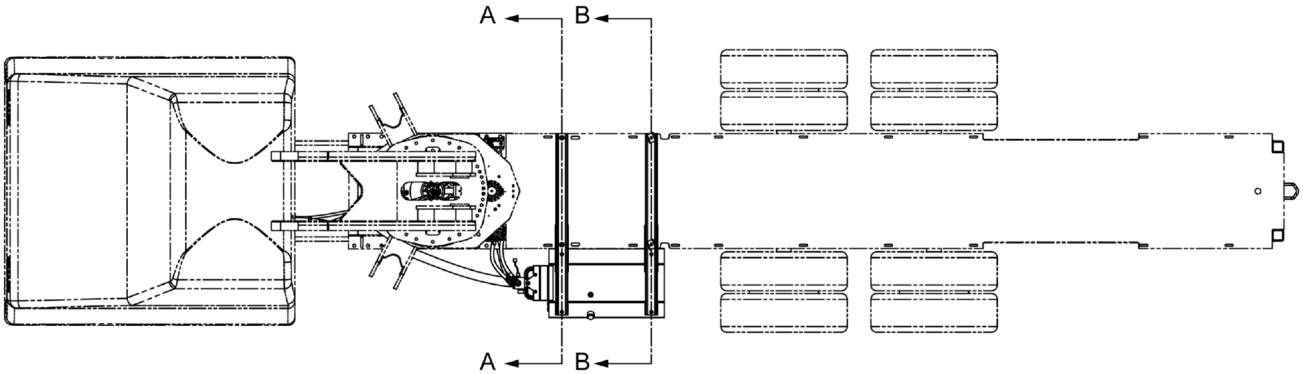

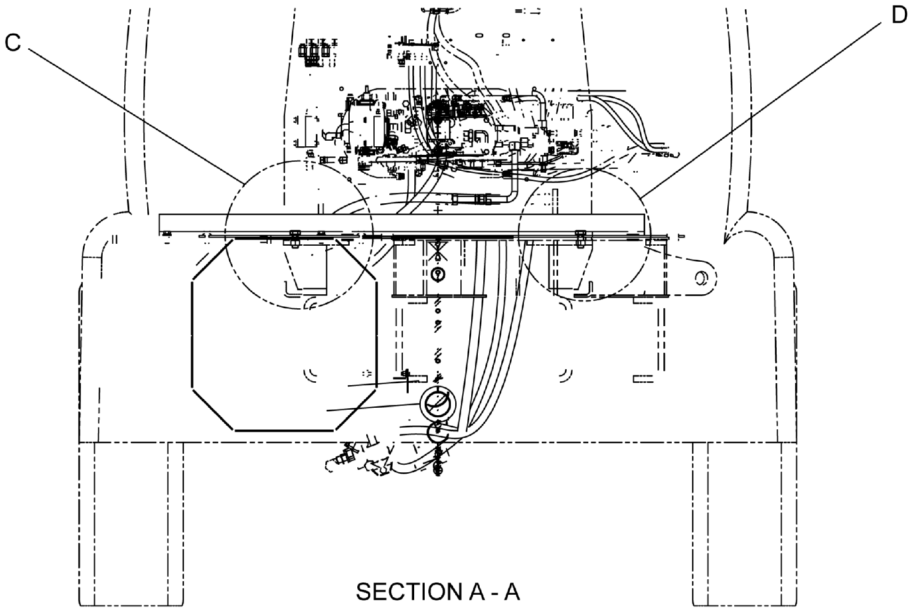

SECTION A - A

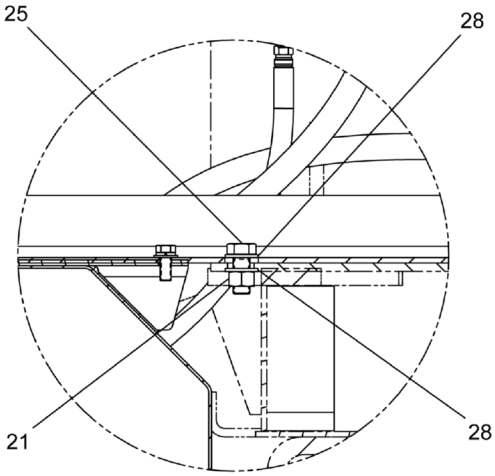

DETAIL C

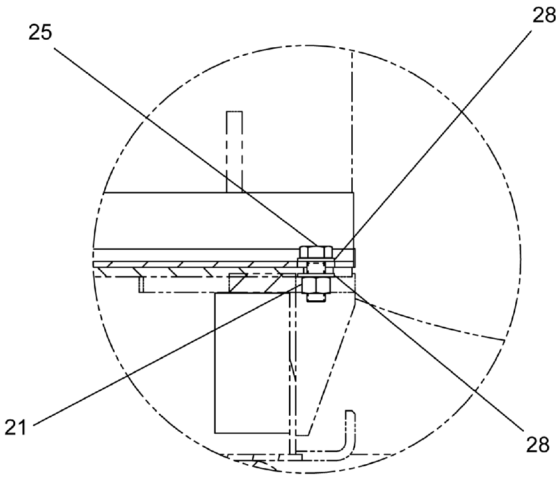

DETAIL D

WHEN ORDERING PARTS, SPECIFY MODEL NUMBER, SERIAL NUMBER AND DESCRIPTION OF PARTS REQUIRED

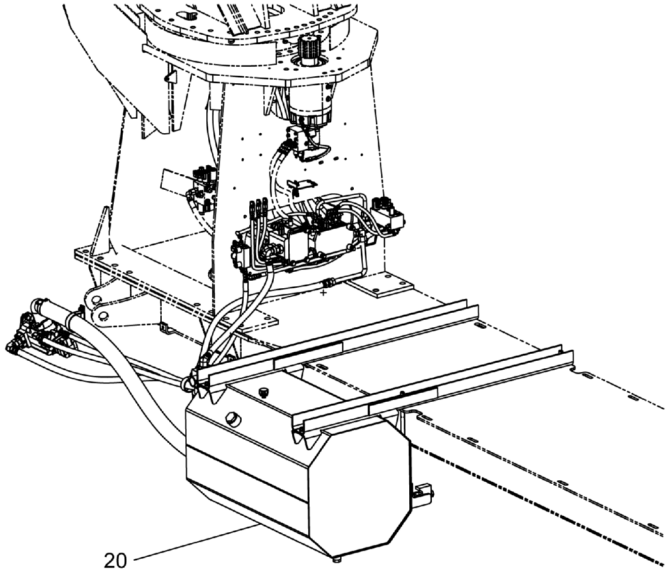

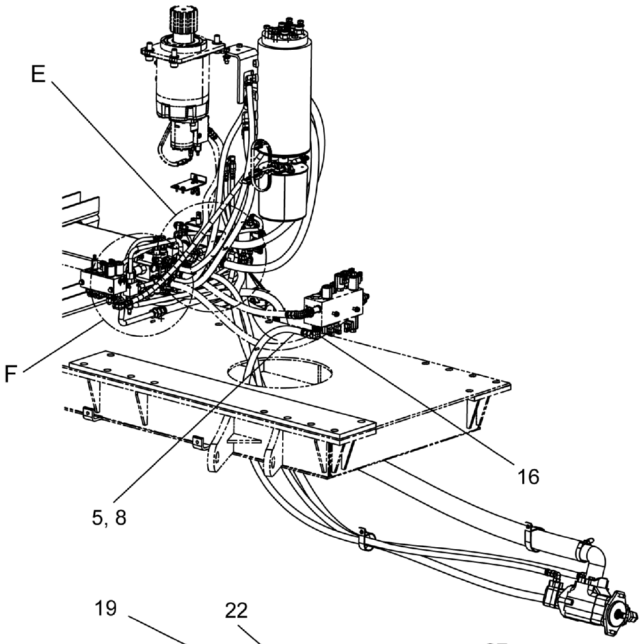

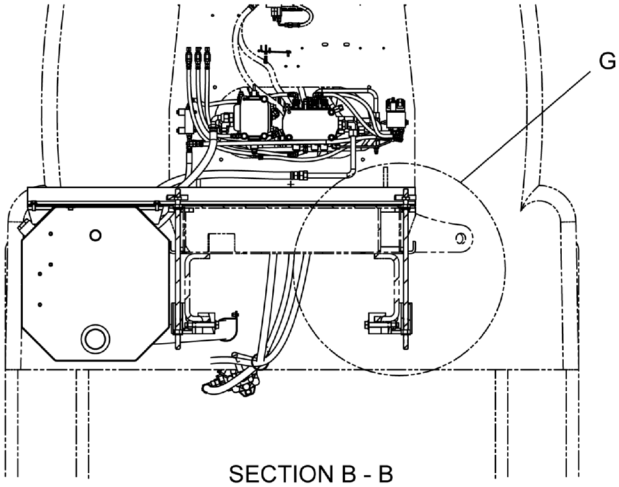

SECTION B - B

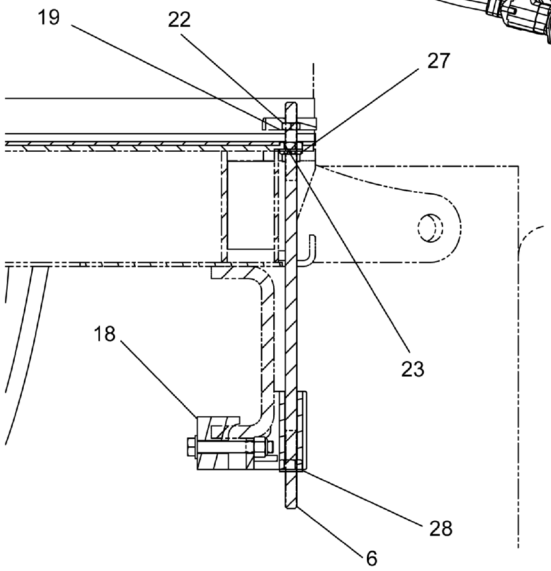

DETAIL G

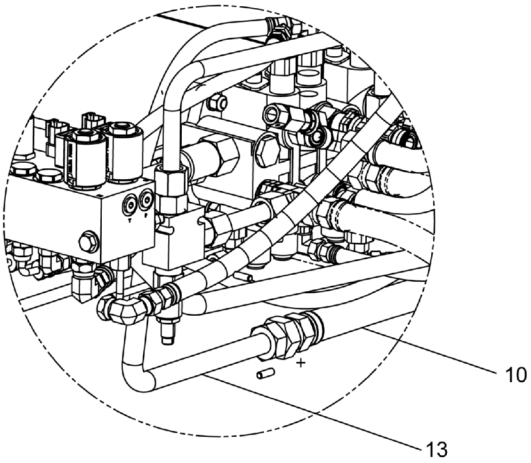

DETAIL F

WHEN ORDERING PARTS, SPECIFY MODEL NUMBER, SERIAL NUMBER AND DESCRIPTION OF PARTS REQUIRED

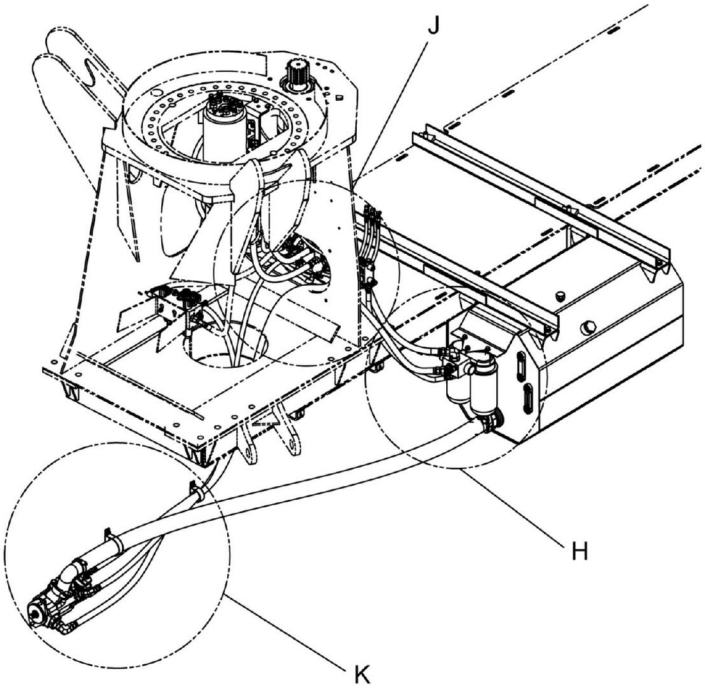

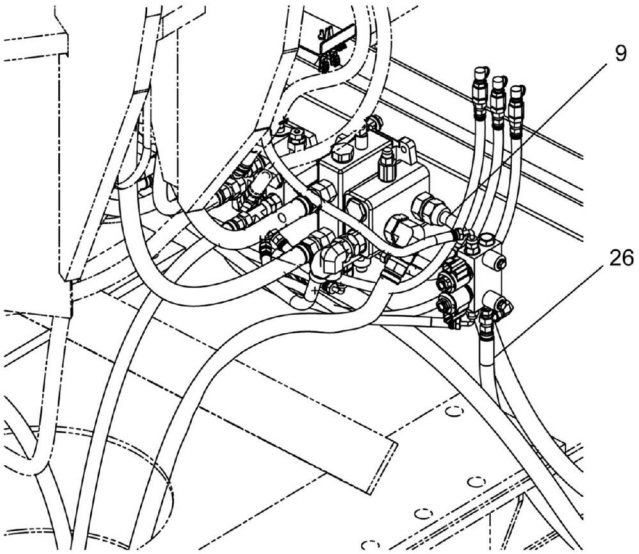

DETAIL J

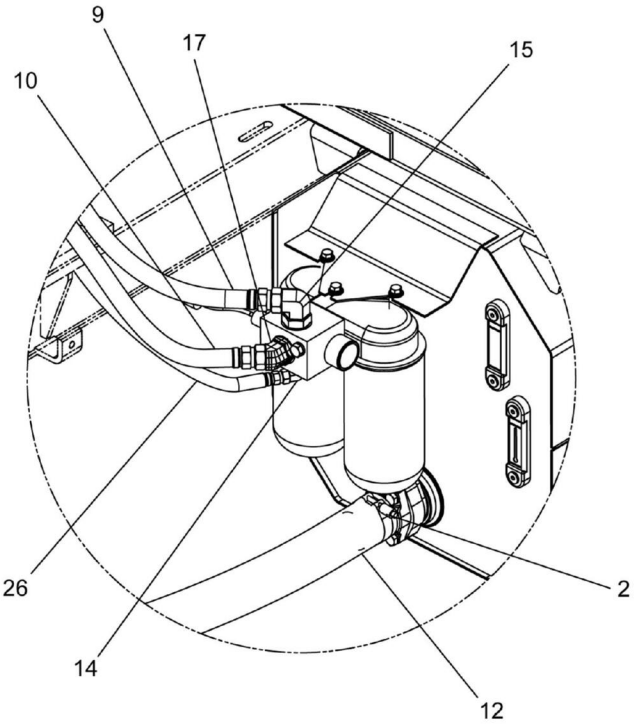

DETAIL H

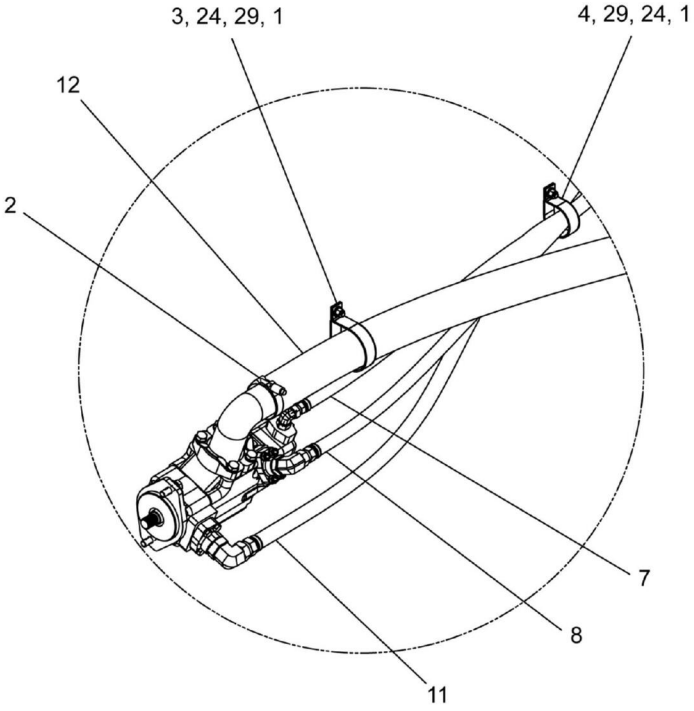

DETAIL K

REF	PART NO.	DESCRIPTION	QTY
	500-01847-03 (Rev. D)	*HYD INSTL, Pump / Tank CF CONROT*	
1	12196-3	Weld Stud, FT 0.375-16 X 1.00	2
2	1240-101	Clamp RG RAY 700-44 Zinc	2
3	201-00257	Clamp, 3.50 DIA	1
4	201-00258	Clamp, 2.50 DIA	1
5	209-00804	Hose Protector (HP8-B)	1
6	220-07056	Tie Rod	2
7	502-30782	Hose, Pump to Main Valve	1
8	502-35095	Hose, Pump - OR Valve	1
9	502-41017	Hose, Winch Return	1
10	502-41018	Hose, Main Valve Return	1
11	502-41021	Hose, Pump-Winch Valve	1
12	503-06008	Hose, Pump Inlet	1
13	510-70844	Tube, Main Valve Return	1
14	514-55020	Adapter, 90 DEG, ORFS to O-Ring	1
15	514-59023	Elbow 90 DEG, MOFS - 12 / MORB -16	1
16	514-66004	Elbow 90 M#10 OFS X F#10 OFS	1
17	515-07003	Fitting, 45 DEG, FGFF-6802-12-16	1
18	**701-00768**	Mid-Mount Tiedown ASSY (see page 95)	2
19	789-05852	Tap Block	2
20	**876-00072**	HYD Reservoir INSTL (see page 96)	1
21	N04-750C000-Y8	Nut, HEX 0.75-10, ST YZ GR8	2
22	N05-750F000-Y8	Nut, HEX Jam 0.75-16, ST YZ GR8	2
23	N12-750F000-25	Nut, HEX HVY 0.75-16, ST ZN GR5	4
24	NYL-375C000-25	Nut, HEX NYL-INS 0.375-16, ST Z G5	2
25	SHF-750CA75-Y8	SCR, HHCS FT 0.75-10 X 1.75, STYZ G8	2
26	T107878	Hose HYD, Drain/Return	1
27	W07-750X000-20	WSH, LCK, MED SPLT 0.75, ST Z	2
28	WAH-75NX000-20	WSH, FL HRD A-NRW 0.75, ST SQC	8
29	WAN-37NX000-20	WSH, FL TYPA-NRW 0.375, ST Z	4

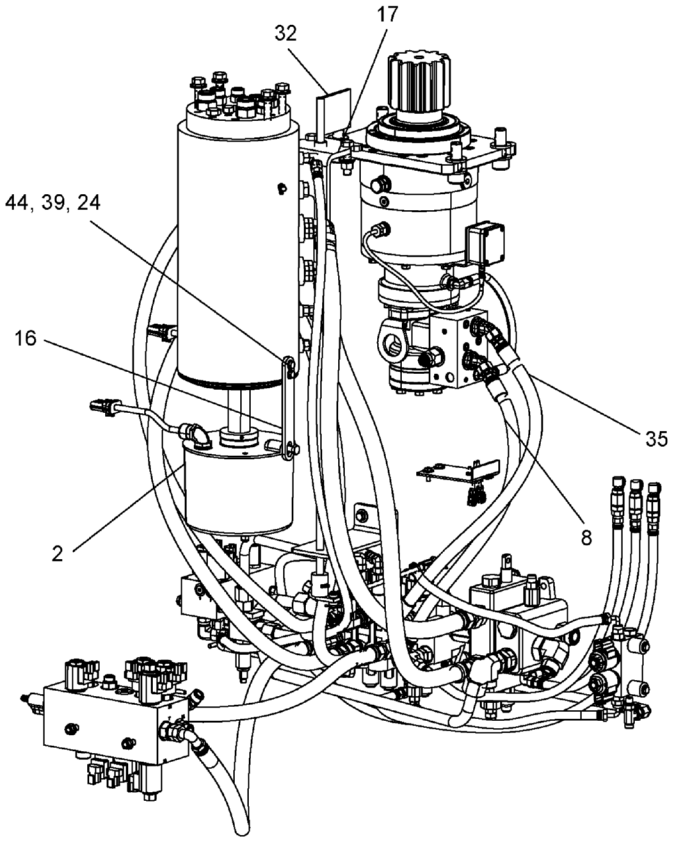

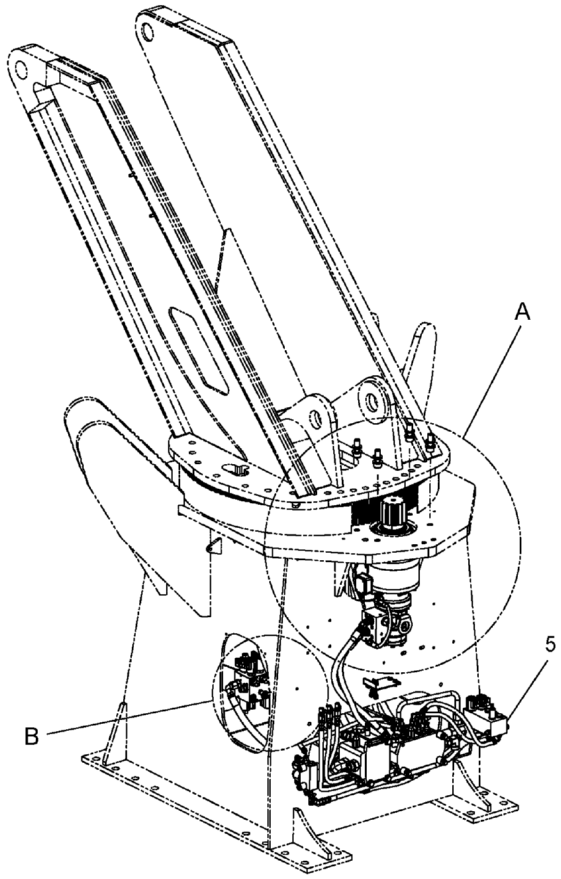

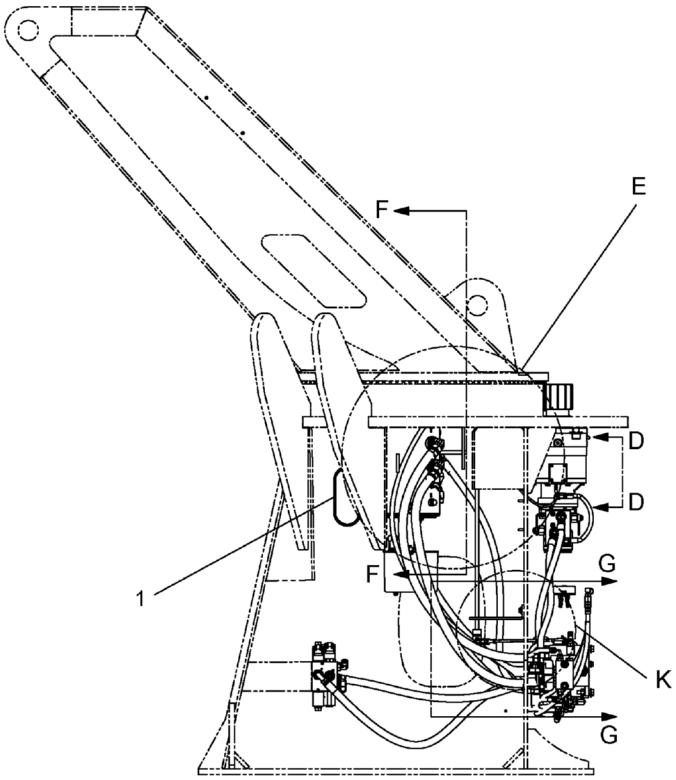

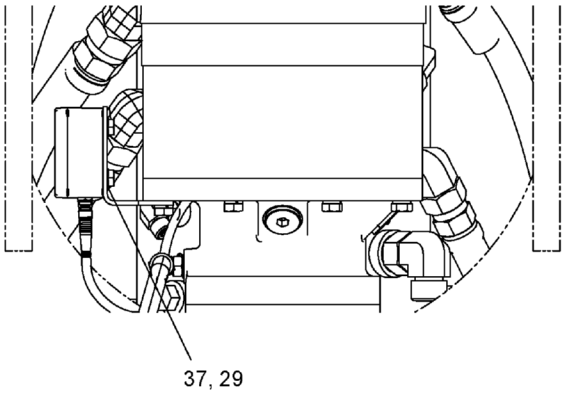

VIEW D - D

WHEN ORDERING PARTS, SPECIFY MODEL NUMBER, SERIAL NUMBER AND DESCRIPTION OF PARTS REQUIRED

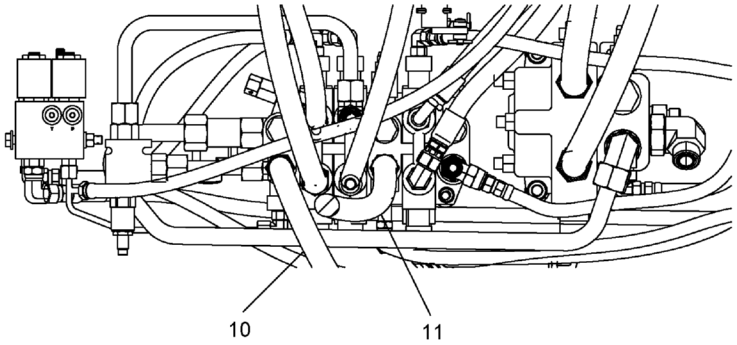

SECTION G - G

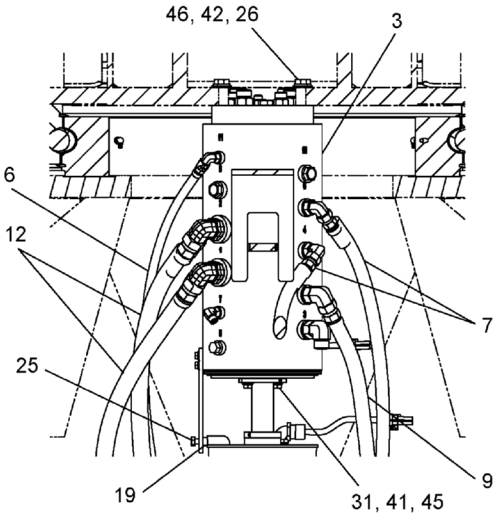

SECTION F - F

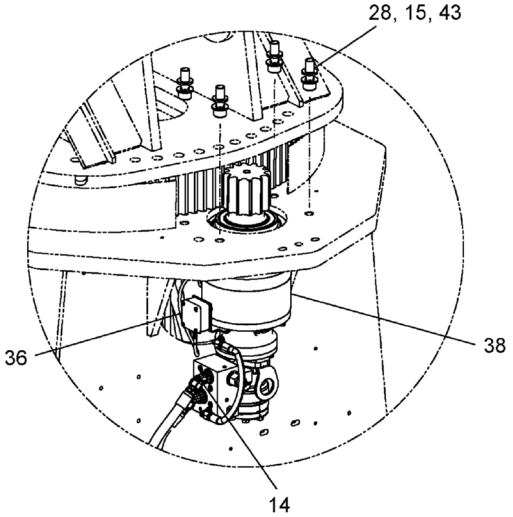

DETAIL A

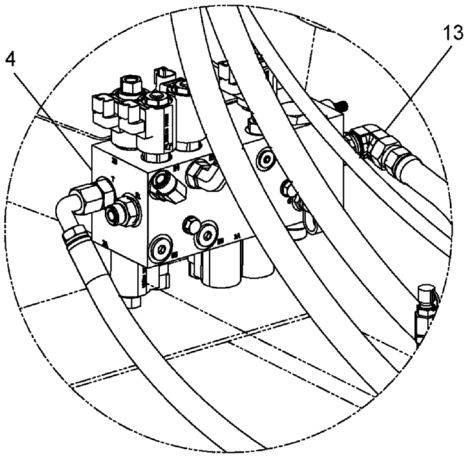

DETAIL B

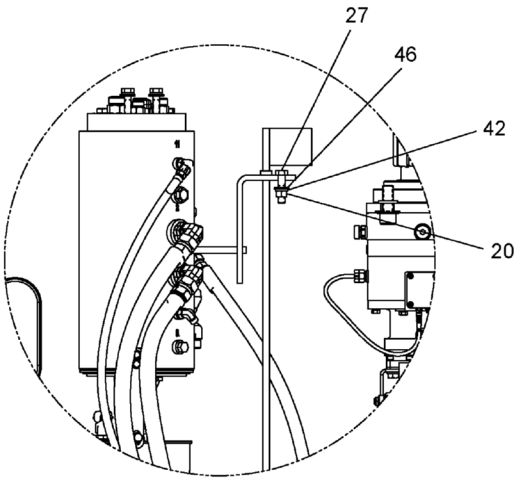

DETAIL E

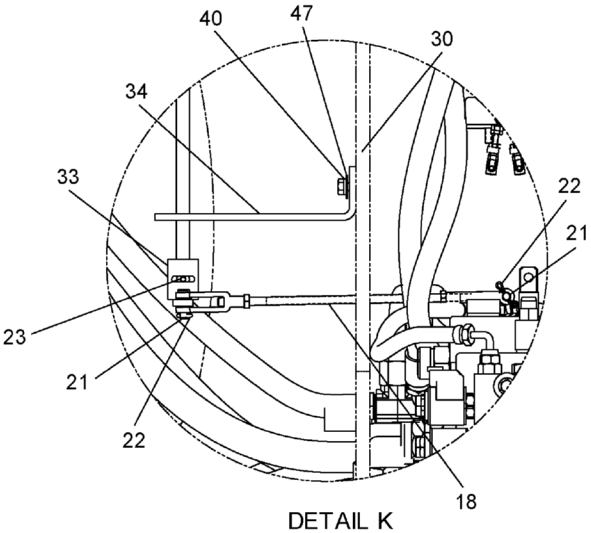

DETAIL K

WHEN ORDERING PARTS, SPECIFY MODEL NUMBER, SERIAL NUMBER AND DESCRIPTION OF PARTS REQUIRED

REF	PART NO.	DESCRIPTION	QTY
	T117826 (Rev. E)	*HYD INSTL, Mainframe-Console*	
1	12169-20	Flex Trim 3/8" X 18" Long	2
2	400-17094	Collector Ring	1
3	**500-01832**	Hydraulic Swivel INSTL (see page 151)	1
4	**500-01851**	ASSY, Main Outrigger Valve (see page 108)	1
5	**500-01852-01**	HYD INSTL, Console CF Winch (see page 110)	1
6	502-11342	Hose, Motor Shift Control, Low	1
7	502-30775	Hose, BM TPNG RET. Lower	2
8	502-30779	Hose, Swing-Drive	1
9	502-35079	Hose, BM TPNG EXT. Lower	1
10	502-35082	Hose, Outrigger Return	1
11	502-35091	Hose OR PB-Boom	1
12	502-40999	Hose, Winch Lower	2
13	514-66004	Elbow 90 M#10 OFS X F#10 OFS	1
14	515-05005	45 Elbow #8 OFS X #10 ORB	2
15	781-00336	Boss, 1.38 X 0.813 X 0.16	4
16	789-05904	Arm, Collector Ring Stop	1
17	789-06007	Swivel, Stop Arm	1
18	806-00246	Swing K/O Lock(01141)	1
19	N04-375C000-25	Nut, HEX 0.375-16, ST Z GR5	1
20	N04-500C000-25	Nut, HEX 0.50 - 13, ST Z GR5	2
21	P01-312XA00-P0	Pin, Clevis 0.3125 X 1.00, STL	2
22	P02-125X750-20	Pin, Cotter 0.125 X 0.75, ST SQC	2
23	P22-188XA50-GP	Pin, Spring SLTD 0.1875 X 1.50, ST	1
24	S01-250CA00-25	SCR, HHCS 0.25-20 X 1.00, ST Z GR5	2
25	S01-375CB25-25	SCR, HHCS 0.375 X -16X2.25, ST Z GR5	1
26	S01-500CA75-25	SCR, HHCS 0.50-13 X l.75, ST Z GR5	4
27	S01-500CB00-25	SCR, HHCS 0.50-13X2.00, ST Z GR5	2
28	S14-750CB00-H2	SCR, SHCS 0.75 - 10 X 2.00, ST Z	4
29	SHF-250C625-25	SCR, HHCS FT 0.25-20 X 0.625, ST SQC G5	2
30	SHF-312C750-25	SCR, HHCS FT 0.312-18 X 0.75, ST SQC G5	2
31	SHF-375CA00-25	SCR, HHCS FT 0.375-16 X 1.00, ST Z G5	2
32	T109850	Flag WELD, Swing Stop	1
33	T110499	Swing Stop Weldment	1
34	T118589	Bracket	1
35	T133371	Hose, -8, 4000, FOFS-8SW/FOFS-8SW90, 700	1
36	T145537	Wad Sensor	1
37	T145587	Washer, Lock, External Tooth, 0.25	2
38	**T146435**	Swing Drive (Omnigear) (see page 120)	1
39	W07-250X000-20	Washer, LCK, MED SPLT 0.25, ST SQC	2
40	W07-312X000-20	WSH, LCK, MED SPLT 0.3125, ST SQC	2
41	W07-375X000-20	WSH, LCK, MED SPLT 0.375, ST Z	2
42	W07-500X000-20	WSH, LCK, MED SPLT 0.50, ST Z	6
43	WAH-75NX000-Y2	WSH, FL HRD A-NRW 0.75, ST YZ	4
44	WAN-25NX000-20	WSH, FL TYPA-NRW 0.25, ST Z	2
45	WAN-37NX000-20	WSH, FL TYPA-NRW 0.375, ST Z	2
46	WAN-50NX000-20	WSH, FL TYPA-NRW 0.50, ST Z	6
47	WBR-31RX875-20	WSH, FL TYPB-REG 0.3125, ST Z	2

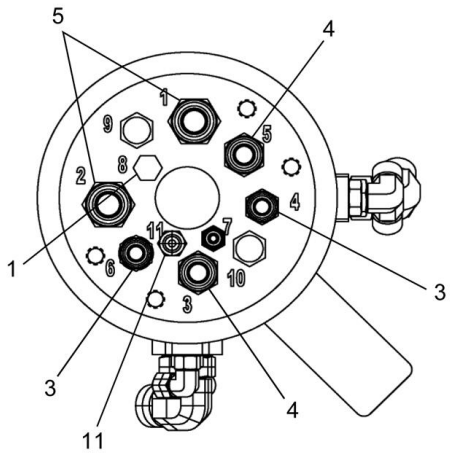

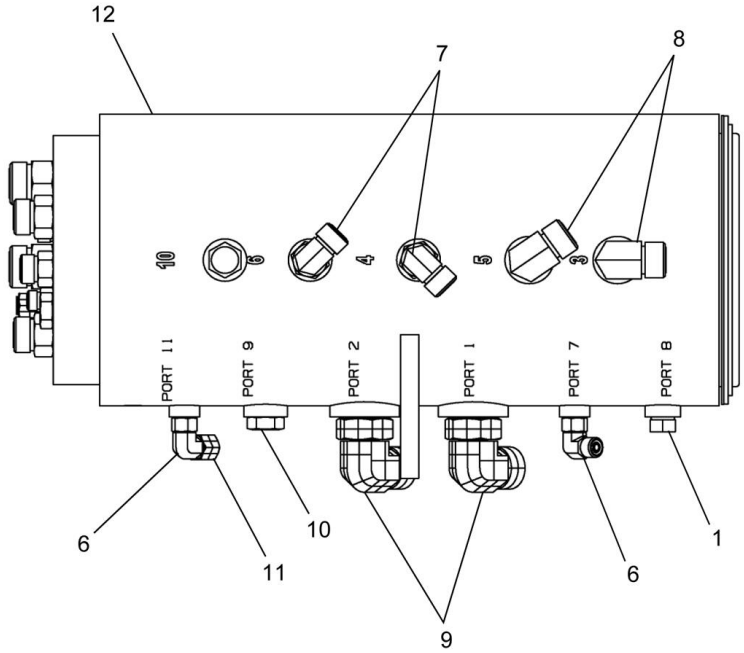

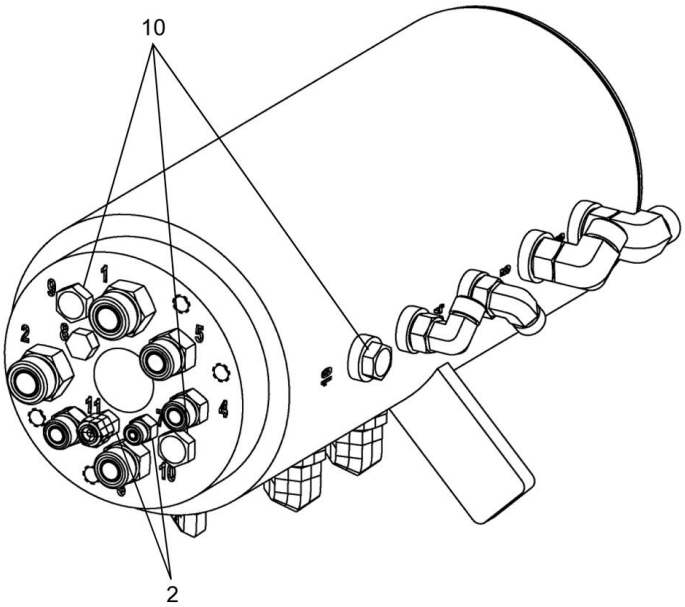

WHEN ORDERING PARTS, SPECIFY MODEL NUMBER, SERIAL NUMBER AND DESCRIPTION OF PARTS REQUIRED

REF	PART NO.	DESCRIPTION	QTY
	500-01832 (Rev. D)	*Hydraulic Swivel INSTL*	
1	1219-980	Plug, ORB-6	2
2	513-20017	Adapter, MOFS-4/MORB-4	2
3	513-50023	Adapter, MOFS-8/MORB-8	2
4	513-60008	Adapter, MORB-10/MOFS-10	2
5	513-70023	Adapter, MOFS-12/MORB-12	2
6	514-52003	Elbow 90° STD-M#4 OFS	2
7	514-55011	90° Elbow M#8 OFS X M#8 ORB	2
8	514-56003	Elbow, 90, MOFS-10/MORB-10	2
9	514-57010	Elbow, 90, MOFS-12/MORB-12	2
10	517-30001	Plug, HEX Head 0.50	4
11	519-20004	Cap, OFS-4	2
12	560-00072	Hydraulic Swivel	1

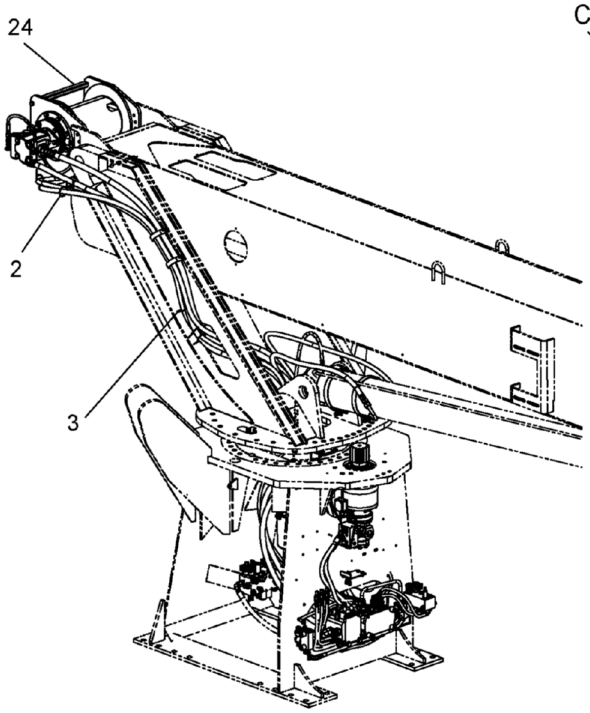

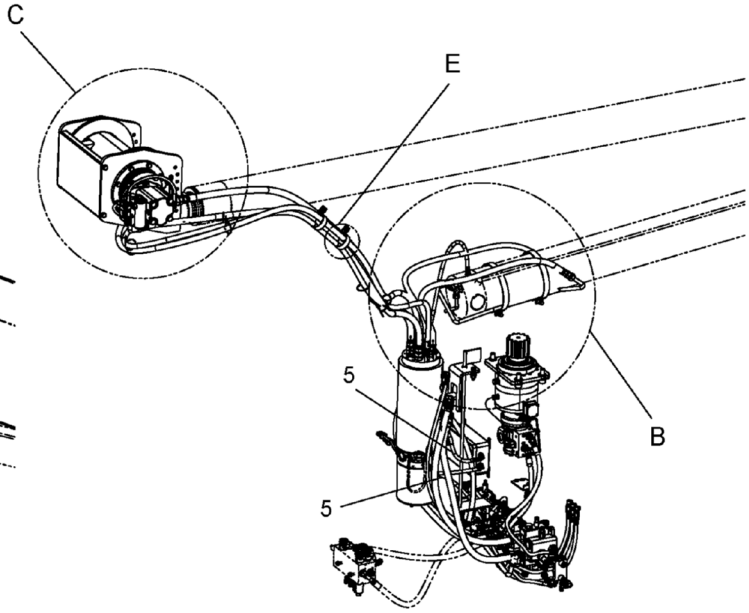

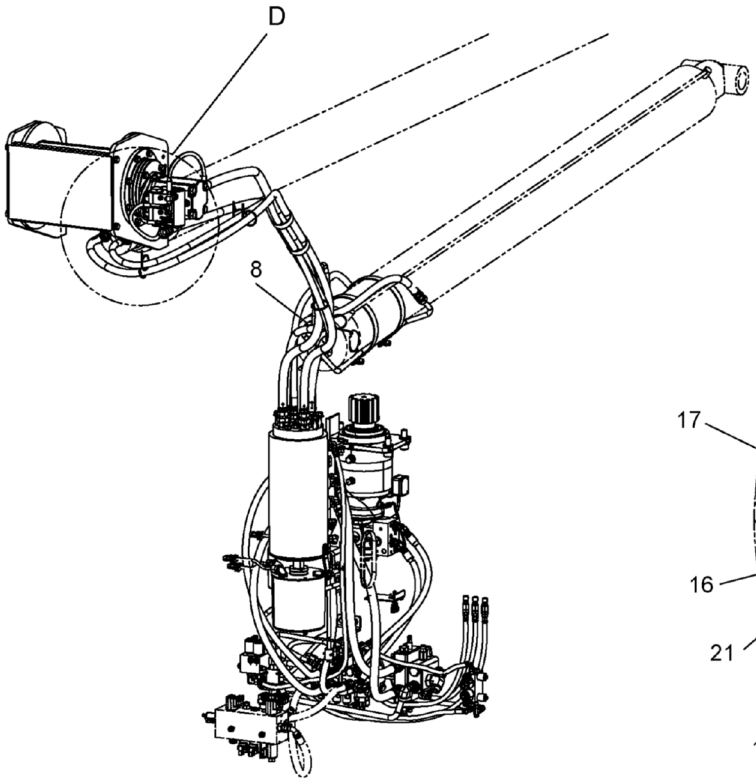

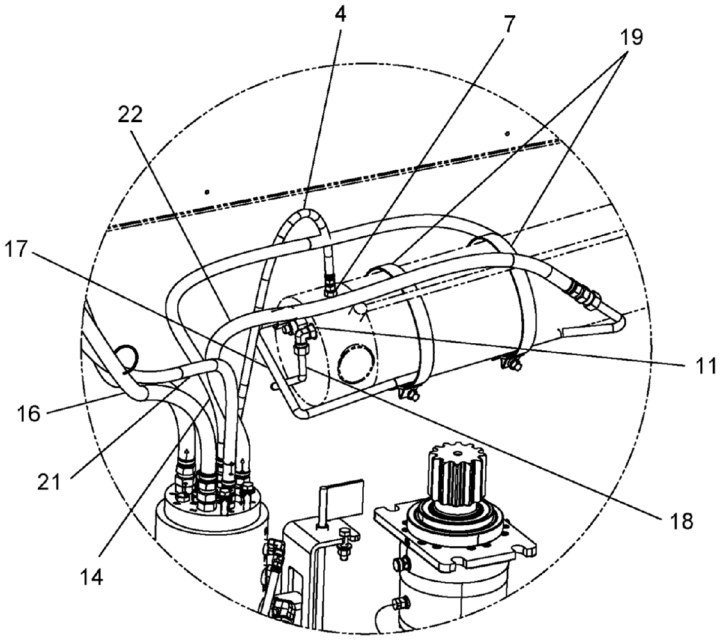

DETAIL B

WHEN ORDERING PARTS, SPECIFY MODEL NUMBER, SERIAL NUMBER AND DESCRIPTION OF PARTS REQUIRED

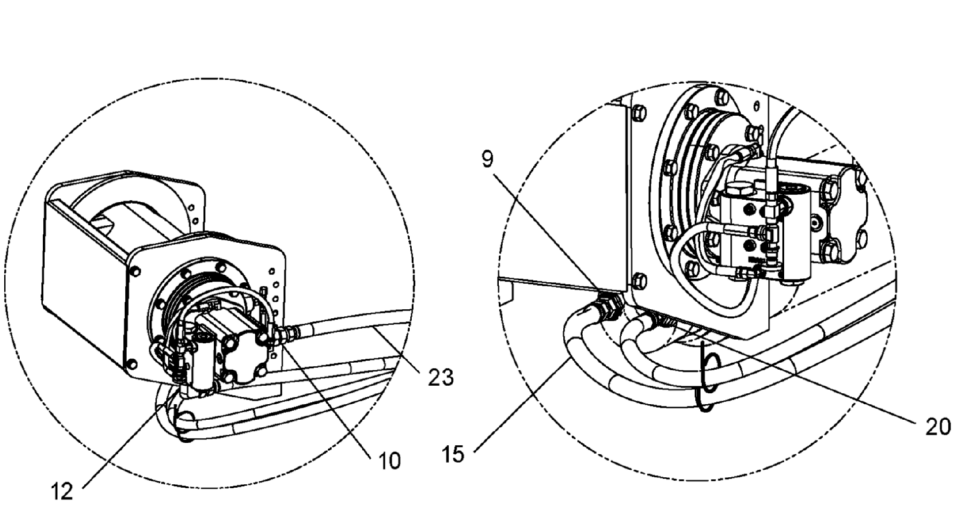

DETAIL C DETAIL D DETAIL E

REF	PART NO.	DESCRIPTION	QTY
	T118032 (Rev. C)	*CONROT, Combined Flow Winch*	
1	200B2007-32	Clamp, 3.00 ARDEN #COV 4917	2
2	400-15086	Tie, Nylon CBL, 1.75 DIA	8
3	400-15088	Ties, Cable / Hose	8
4	502-11348	Hose ASSY, RCL/TPG CYL Upper	1
5	502-11351	Hose, HYD RCL Topping Rod Base	2
6	WAN-37NX000-20	WSH, FL TYPA-NRW 0.375, ST Z	2
7	513-20019	Adapter, MOFS-4/MORB-6	1
8	513-60008	Adapter, MORB-10/MOFS-10	1
9	513-60015	Adapter, MOFS-10/MORB-12	1
10	513-70026	Adapter, MOFS-12/MORB-16	1
11	514-55011	90° Elbow M#8 OFS X M#8 ORB	1
12	514-59023	Elbow 90 DEG, MOFS - 12 / MORB -16	1
13	NYL-375C000-25	Nut, HEX NYL-INS 0.375-16, ST Z G5	2
14	T107017	Hose Assembly-Boom Topping RET	1
15	T107018	Hose Assembly-Boom Telescope EXT	1
16	T107020	Hose Assembly-Winch Motor	1
17	T107021	Tube, HYD Boom-Topping Extend	1
18	T107022	Tube, HYD Boom-Topping Retract	1
19	T107114	Clamp, T-Bolt 8.5"	2
20	T107850	Fitting, STR080FS120RB	1
21	T113664	Hose Assembly-Boom Telescope RET	1
22	T113665	Hose Assembly-Boom Telescope EXT	1
23	T113666	Hose Assembly-Winch Motor	1
24	T146992	Winch	1

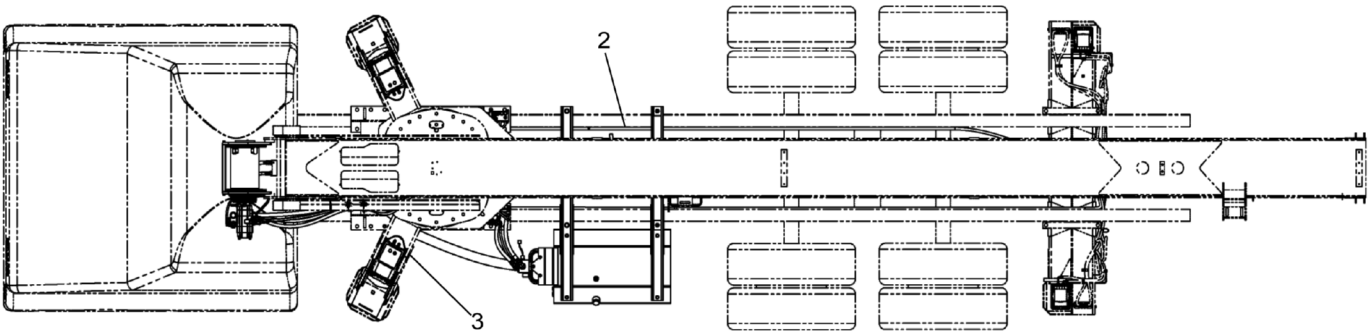
2
3

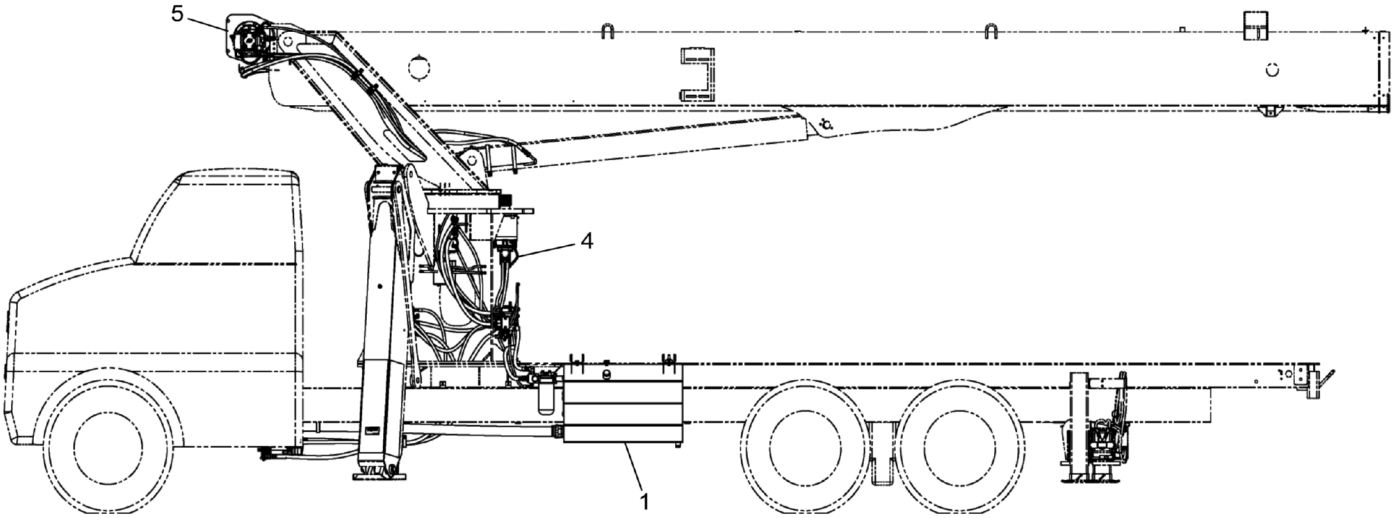
5
4
1

REF	PART NO.	DESCRIPTION	QTY
	T118788 (Rev. A)	*HYD INSTL, CONROT - MS WINCH*	
1	**500-01847-03**	HYD INSTL, Pump / Tank CF CONROT (see page 144)	1
2	**500-01848-01**	HYD INSTL, AUX Outrigger (see page 100)	1
3	**500-01849-01**	HYD INSTL, Main Outrigger (see page 102)	1
4	**T117827**	HYD INSTL, Mainframe-Console (see page 158)	1
5	**T118033**	Hydraulic INSTL CON MS Winch (see page 161)	1

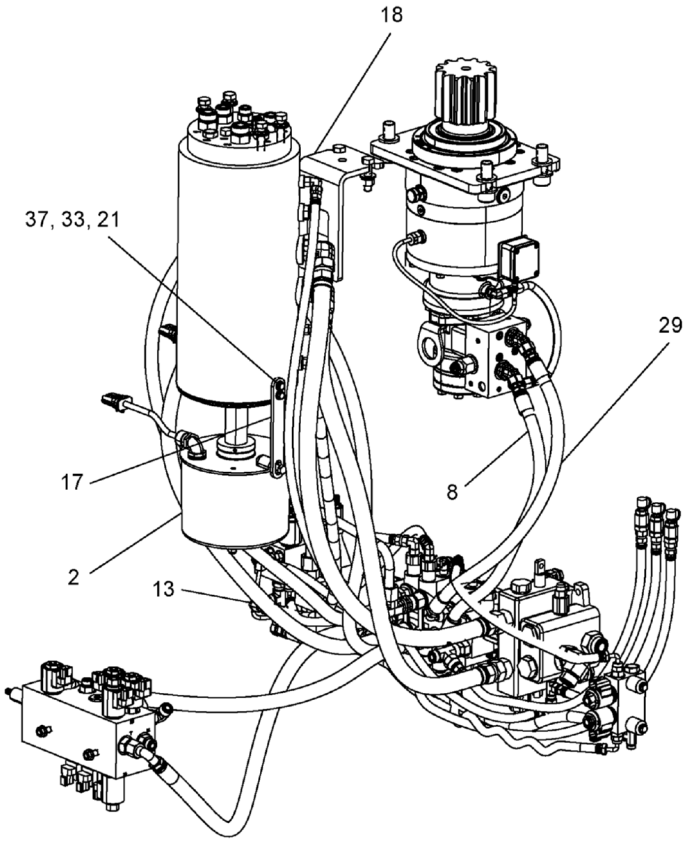

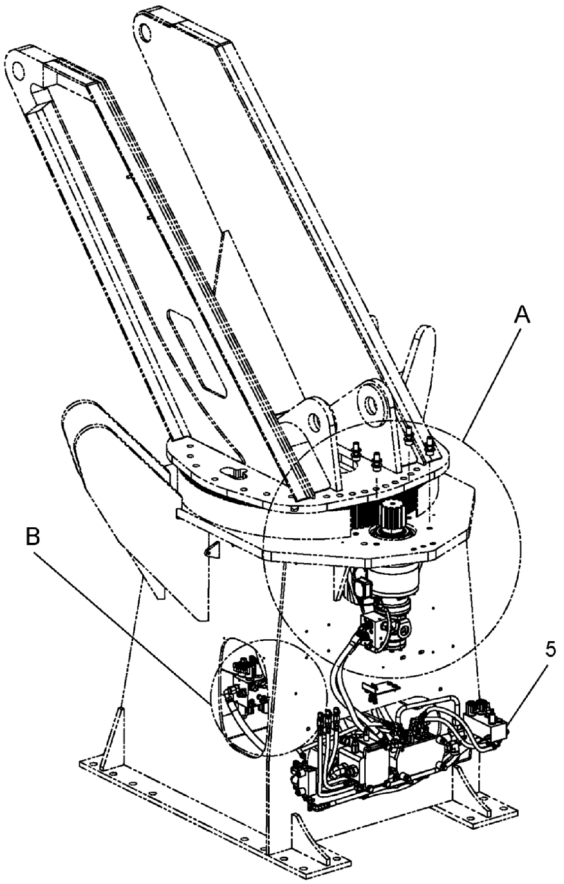

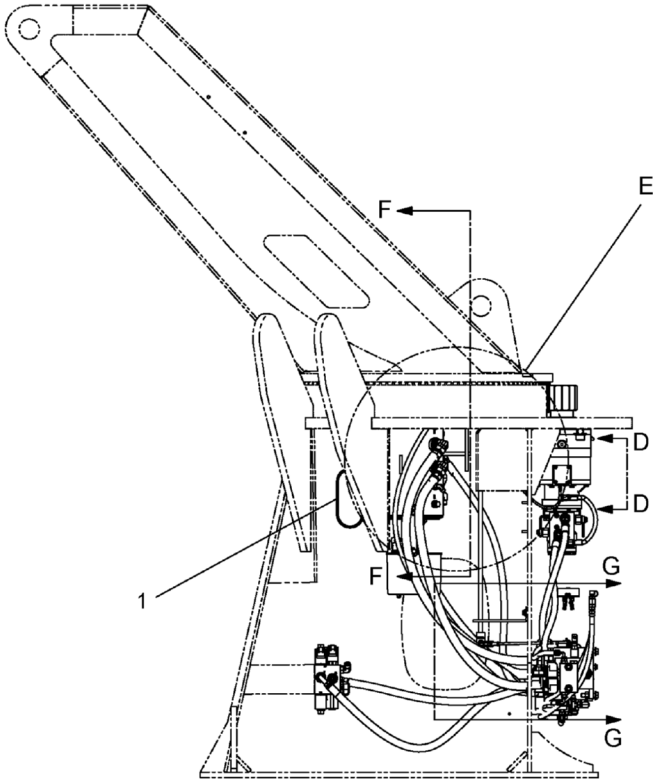

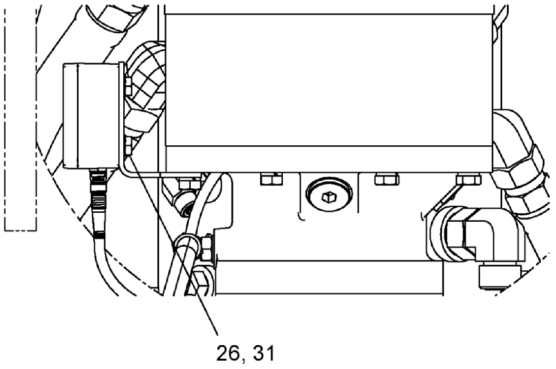

VIEW D - D

WHEN ORDERING PARTS, SPECIFY MODEL NUMBER, SERIAL NUMBER AND DESCRIPTION OF PARTS REQUIRED

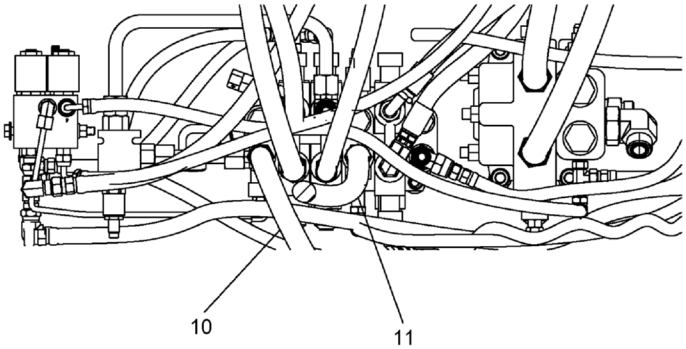

SECTION G - G

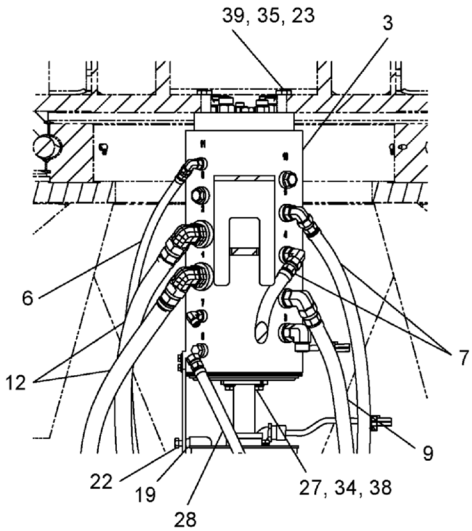

SECTION F - F

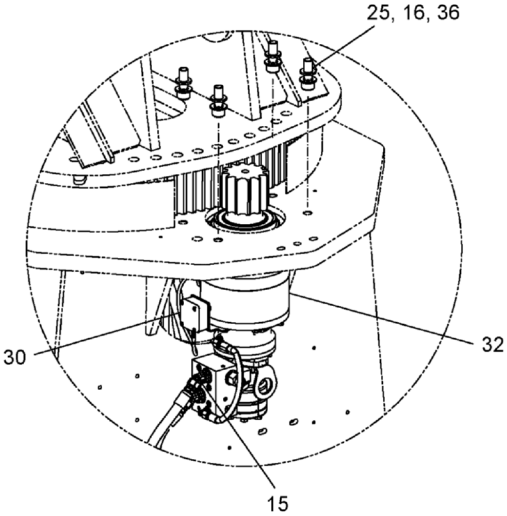

DETAIL A

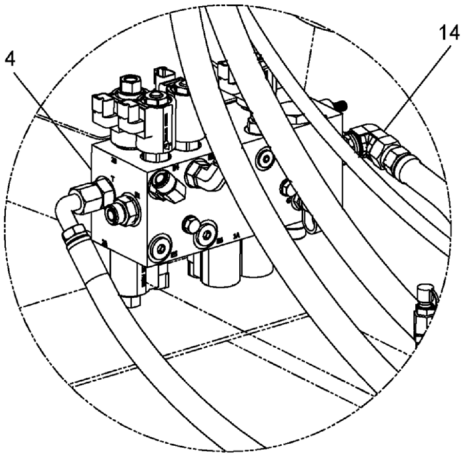

DETAIL B

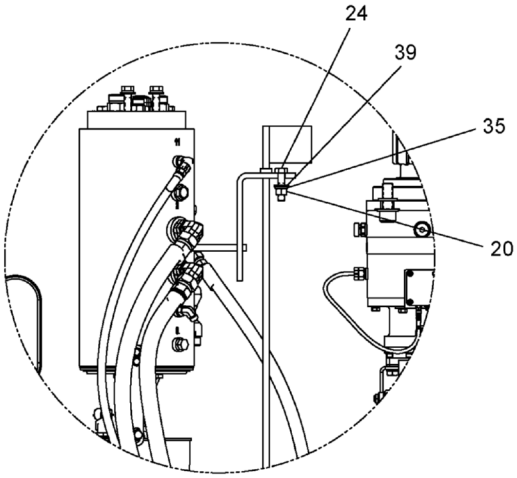

DETAIL E

REF	PART NO.	DESCRIPTION	QTY
	T117827 (Rev. D)	*HYD INSTL, Mainframe-Console*	
1	12169-20	Flex Trim 3/8" X 18" Long	2
2	400-17094	Collector Ring	1
3	**500-01832**	Hydraulic Swivel INSTL (see page 151)	1
4	**500-01851**	ASSY, Main Outrigger Valve (see page 108)	1
5	**500-01852-04**	HYD INSTL, Console MS Winch (see page 131)	1
6	502-11342	Hose, Motor Shift Control, Low	1
7	502-30775	Hose, BM TPNG RET. Lower	2
8	502-30779	Hose, Swing-Drive	1
9	502-35079	Hose, BM TPNG EXT. Lower	1
10	502-35082	Hose, Outrigger Return	1
11	502-35091	Hose OR PB-Boom	1
12	502-40999	Hose, Winch Lower	2
13	514-64002	Elbow 90°, Swivel, -6	1
14	514-66004	Elbow 90 M#10 OFS X F#10 OFS	1
15	515-05005	45 Elbow #8 OFS X #10 ORB	2
16	781-00336	Boss, 1.38 X 0.813 X 0.16	4
17	789-05904	Arm, Collector Ring Stop	1
18	789-06007	Swivel, Stop Arm	1
19	N04-375C000-25	Nut, HEX 0.375-16, ST Z GR5	1
20	N04-500C000-25	Nut, HEX 0.50 - 13, ST Z GR5	2
21	S01-250CA00-25	SCR, HHCS 0.25-20 X 1.00, ST Z GR5	2
22	S01-375CB25-25	SCR, HHCS 0.375 X -16X2.25, ST Z GR5	1
23	S01-500CA75-25	SCR, HHCS 0.50-13 X l.75, ST Z GR5	4
24	S01-500CB00-25	SCR, HHCS 0.50-13X2.00, ST Z GR5	2
25	S14-750CB00-H2	SCR, SHCS 0.75 - 10 X 2.00, ST Z	4
26	SHF-250C625-25	SCR, HHCS FT 0.25-20 X 0.625, ST SQC G5	2
27	SHF-375CA00-25	SCR, HHCS FT 0.375-16 X 1.00, ST Z G5	2
28	T113667	Hose, HYD	1
29	T133371	Hose, -8, 4000, FOFS-8SW/FOFS-8SW90, 700	1
30	T145537	Wad Sensor	1
31	T145587	Washer, Lock, External Tooth, 0.25	2
32	**T146435**	Swing Drive (Omnigear) (see page 120)	1
33	W07-250X000-20	Washer, LCK, MED SPLT 0.25, ST SQC	2
34	W07-375X000-20	WSH, LCK, MED SPLT 0.375, ST Z	2
35	W07-500X000-20	WSH, LCK, MED SPLT 0.50, ST Z	6
36	WAH-75NX000-Y2	WSH, FL HRD A-NRW 0.75, ST YZ	4
37	WAN-25NX000-20	WSH, FL TYPA-NRW 0.25, ST Z	2
38	WAN-37NX000-20	WSH, FL TYPA-NRW 0.375, ST Z	2
39	WAN-50NX000-20	WSH, FL TYPA-NRW 0.50, ST Z	6

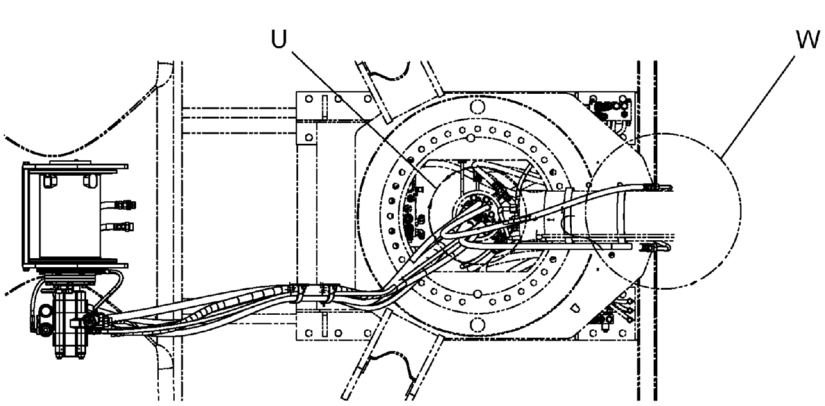

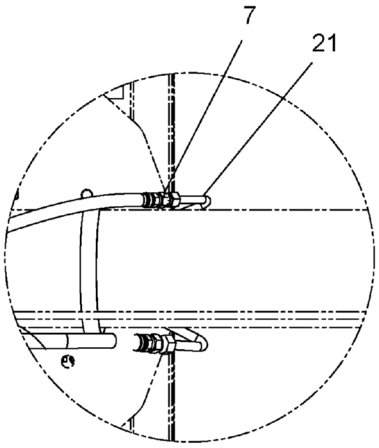

DETAIL W

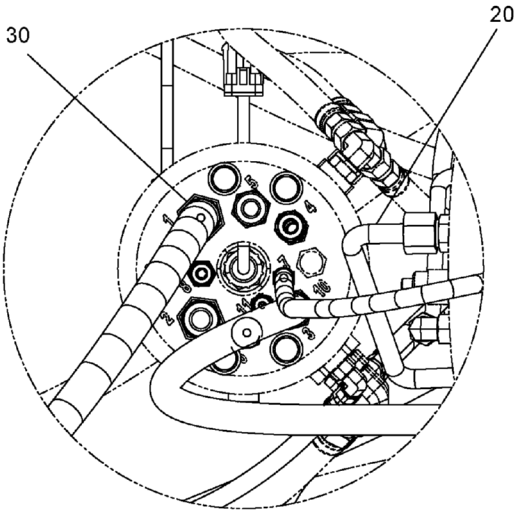

DETAIL U

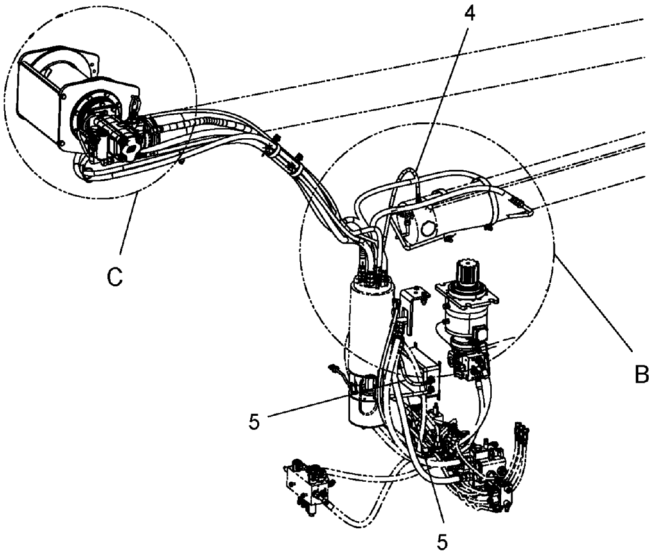

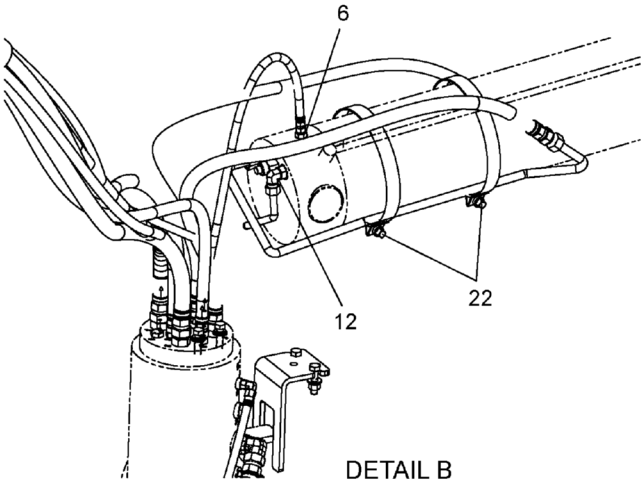

DETAIL B

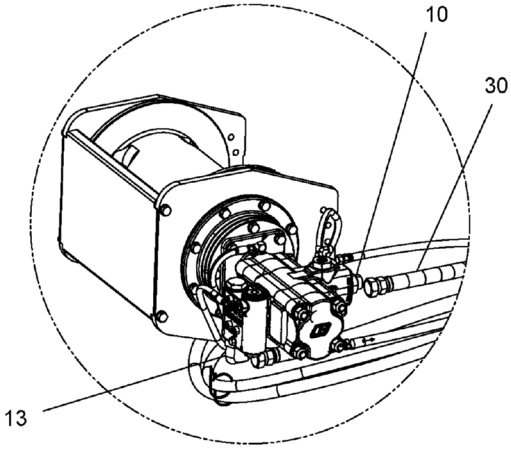

DETAIL C

WHEN ORDERING PARTS, SPECIFY MODEL NUMBER, SERIAL NUMBER AND DESCRIPTION OF PARTS REQUIRED

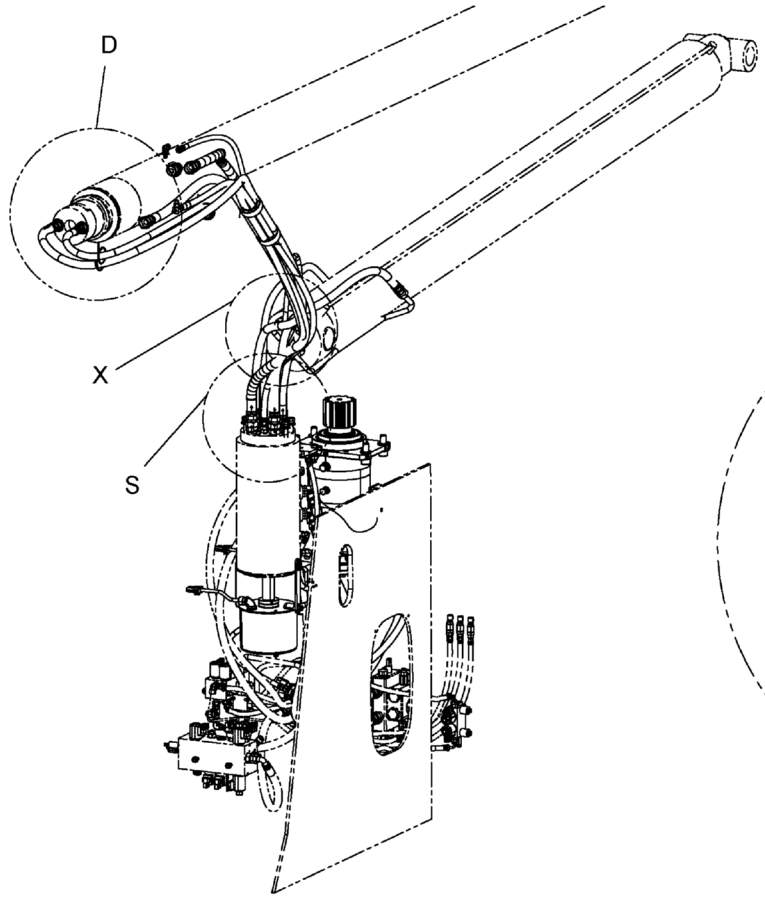

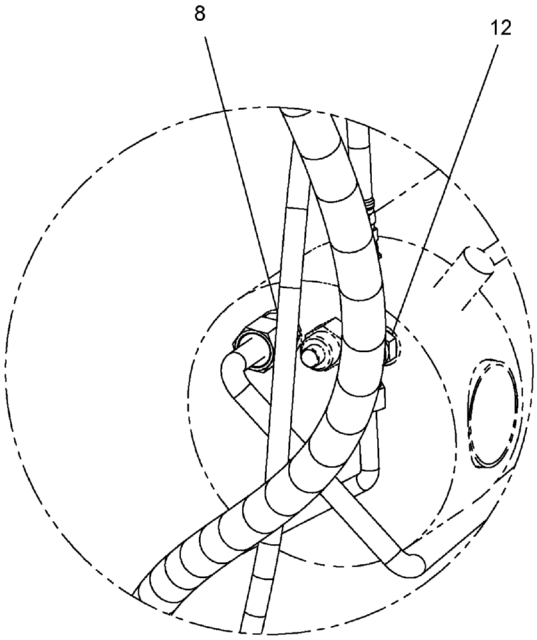

DETAIL X

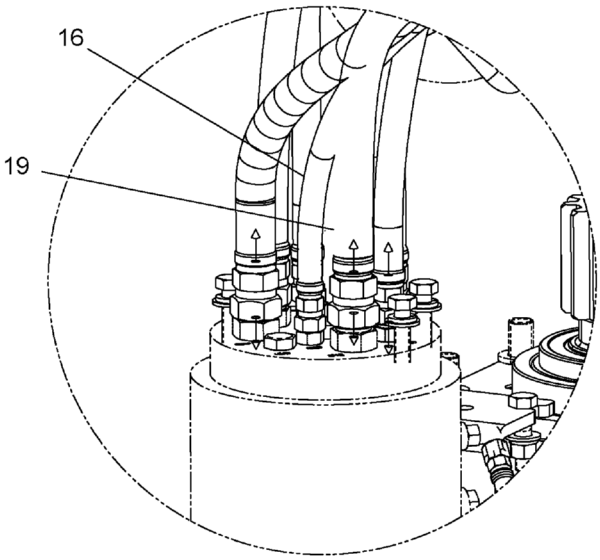

DETAIL S

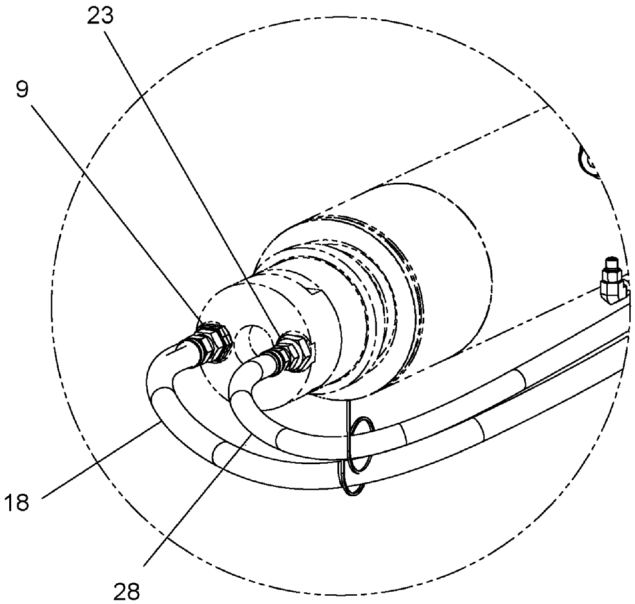

DETAIL D

WHEN ORDERING PARTS, SPECIFY MODEL NUMBER, SERIAL NUMBER AND DESCRIPTION OF PARTS REQUIRED

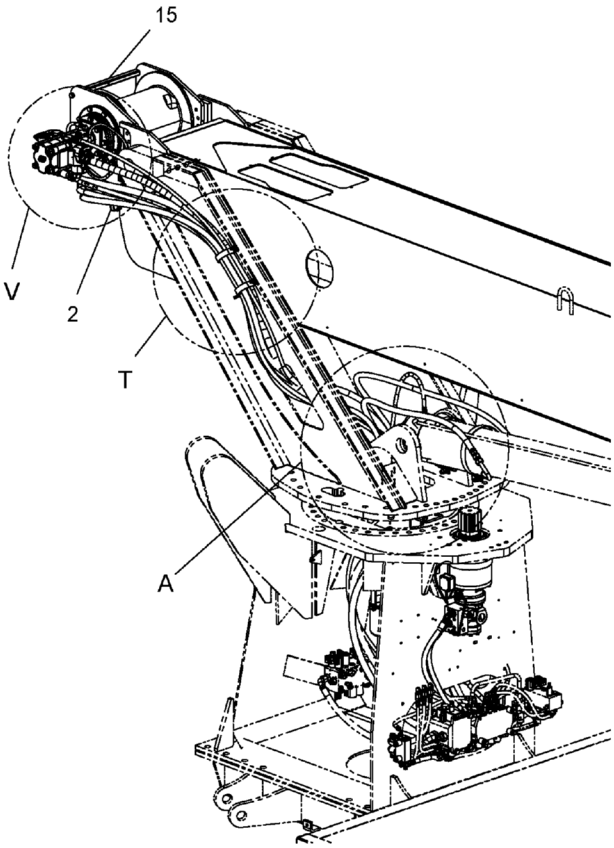

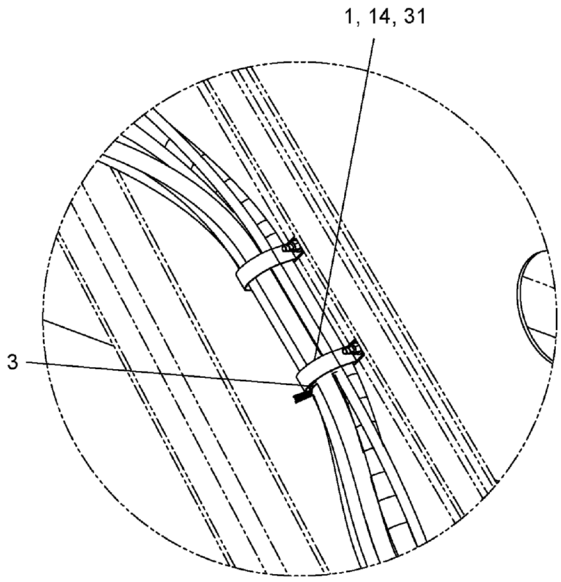

DETAIL T

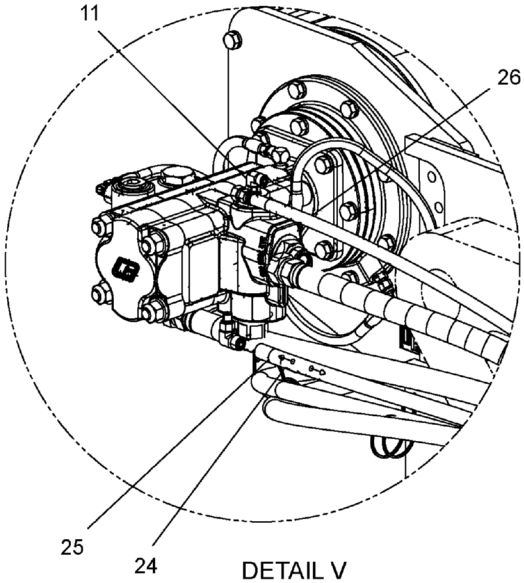

DETAIL V

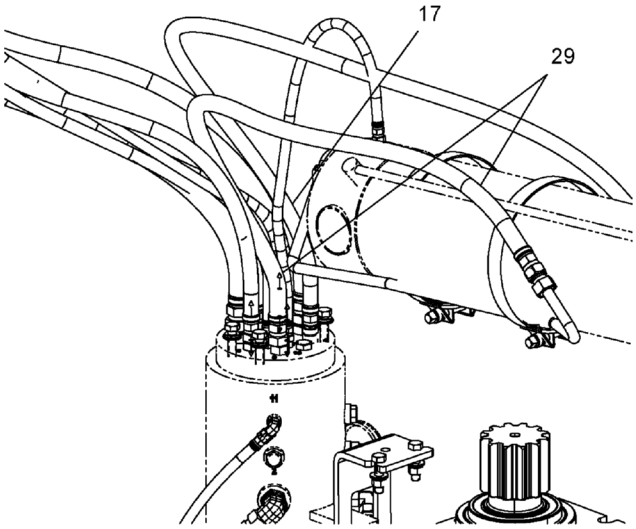

DETAIL A

REF	PART NO.	DESCRIPTION	QTY
	T118033 (Rev. C)	*Hydraulic INSTL CON MS Winch*	
1	200B2007-32	Clamp, 3.00 ARDEN #COV 4917	2
2	400-15086	Tie, Nylon CBL, 1.75 DIA	8
3	400-15088	Ties, Cable / Hose	8
4	502-11348	Hose ASSY, RCL/TPG CYL Upper	1
5	502-11351	Hose, HYD RCL Topping Rod Base	2
6	513-20019	Adapter, MOFS-4/MORB-6	1
7	513-50023	Adapter, MOFS-8/MORB-8	1
8	513-60008	Adapter, MORB-10/MOFS-10	2
9	513-60015	Adapter, MOFS-10/MORB-12	1
10	513-70026	Adapter, MOFS-12/MORB-16	1
11	514-52003	Elbow 90° STD-M#4 OFS	1
12	514-55011	90° Elbow M#8 OFS X M#8 ORB	1
13	514-59023	Elbow 90 DEG, MOFS - 12 / MORB -16	1
14	NYL-375C000-25	Nut, HEX NYL-INS 0.375-16, ST Z G5	2
15	**T106045**	Winch ASSY (Braden) (see page 138)	1
16	T107014	Hose Assembly-Winch Motor Drain	1
17	T107017	Hose Assembly-Boom Topping RET	1
18	T107018	Hose Assembly-Boom Telescope EXT	1
19	T107020	Hose Assembly-Winch Motor	1
20	T107021	Tube, HYD Boom-Topping Extend	1
21	T107022	Tube, HYD Boom-Topping Retract	1
22	T107114	Clamp, T-Bolt 8.5"	2
23	T107850	Fitting, STR080FS120RB	1
24	T107985	Fitting, Adaptor	1
25	T107986	Fitting, Reducer	1
26	T107987	Hose Assembly, 2SP Pilot Upper	1
27*	T109277	Target Plate, Proximity Switch	1
28	T113664	Hose Assembly-Boom Telescope RET	1
29	T113665	Hose Assembly-Boom Telescope EXT	1
30	T113666	Hose Assembly-Winch Motor	1
31	WAN-37NX000-20	WSH, FL TYPA-NRW 0.375, ST Z	2

* ITEM NOT SHOWN IN ILLUSTRATION

WHEN ORDERING PARTS, SPECIFY MODEL NUMBER, SERIAL NUMBER AND DESCRIPTION OF PARTS REQUIRED

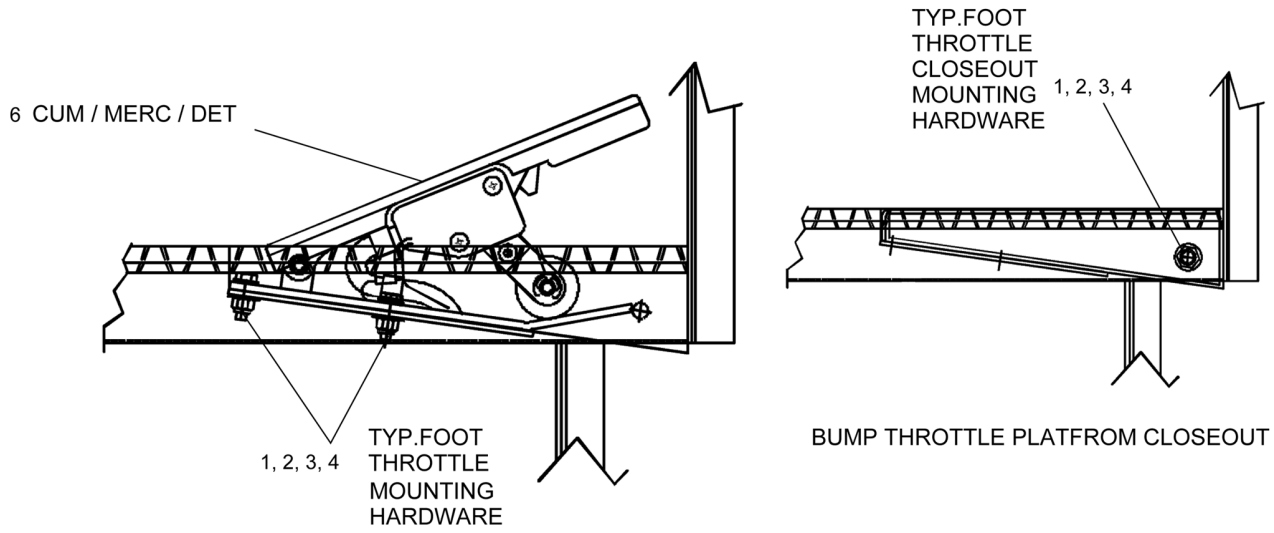

REF	PART NO.	DESCRIPTION	QTY
	400-14032-1 (Rev. G)	*Throttle INSTL Option*	
1	SHF-250CA00-25	SCR, HHCS FT 0.25-20X1.00, ST Z G5	2
2	WAN-25NX000-20	WSH, FL TYPA-NRW 0.25, ST Z	4
3	WFD-250XA50-20	WSH, FNDR 0.25 X 1.50, ST SQC	2
4	NYL-250C000-25	Nut, HEX NYL-INS 0.25-20, ST SQC G5	2
5*	400-25215	Dual Throttle Harness	1
6	300-00501	Williams Control Throttle Pedal	2

* ITEM NOT SHOWN IN ILLUSTRATION

WHEN ORDERING PARTS, SPECIFY MODEL NUMBER, SERIAL NUMBER AND DESCRIPTION OF PARTS REQUIRED

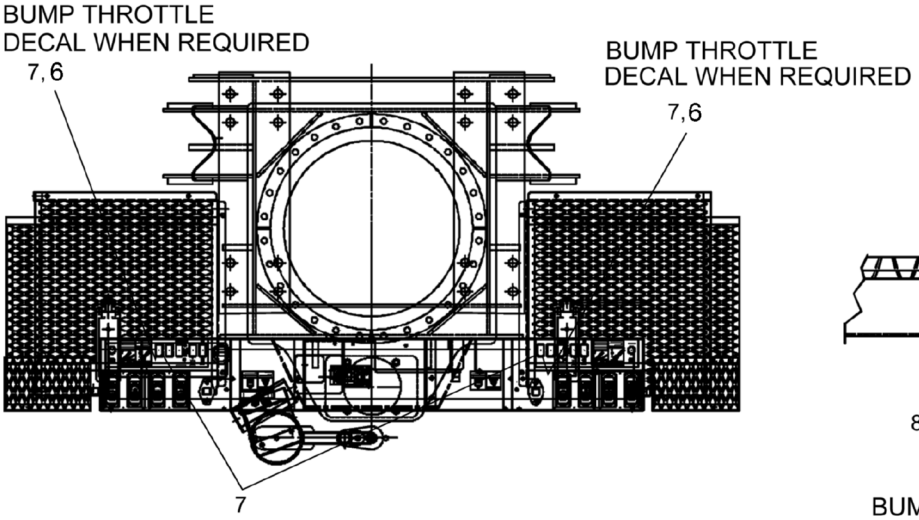

FOR CAT ENGINE INSTALLTHROTTLE SWITCH FAR RIGHT SIDE
SWITCH OPENING

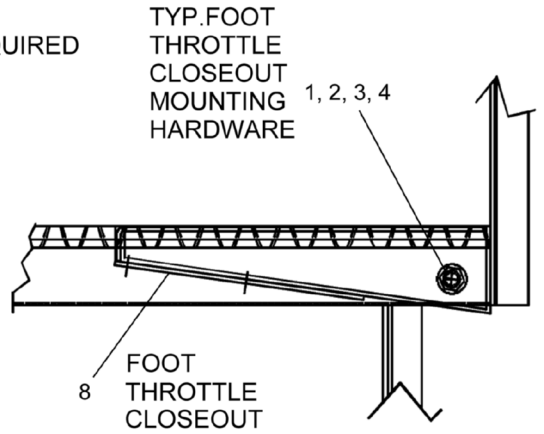

BUMP THROTTLE PLATFROM CLOSEOUT

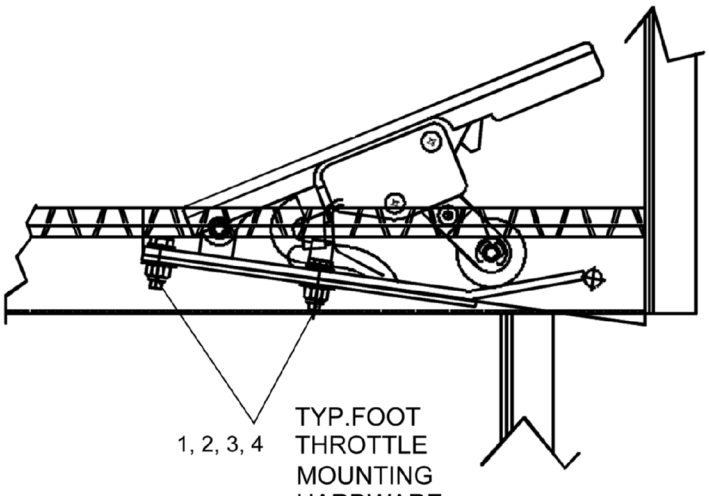

REF	PART NO.	DESCRIPTION	QTY
	400-14032-4 (Rev. G)	*Throttle INSTL Option*	
1	SHF-250CA00-25	SCR, HHCS FT 0.25-20X1.00, ST Z G5	2
2	WAN-25NX000-20	WSH, FL TYPA-NRW 0.25, ST Z	4
3	WFD-250XA50-20	WSH, FNDR 0.25 X 1.50, ST SQC	2
4	NYL-250C000-25	Nut, HEX NYL-INS 0.25-20, ST SQC G5	2
5*	400-25224	Dual Throttle Harness	1
6	651-00475	Throttle Decal (Bump)	2
7	1223-1036	Throttle Switch	2
8	T114592	Foot Throttle Closeout (Bump)	2

* ITEM NOT SHOWN IN ILLUSTRATION

WHEN ORDERING PARTS, SPECIFY MODEL NUMBER, SERIAL NUMBER AND DESCRIPTION OF PARTS REQUIRED

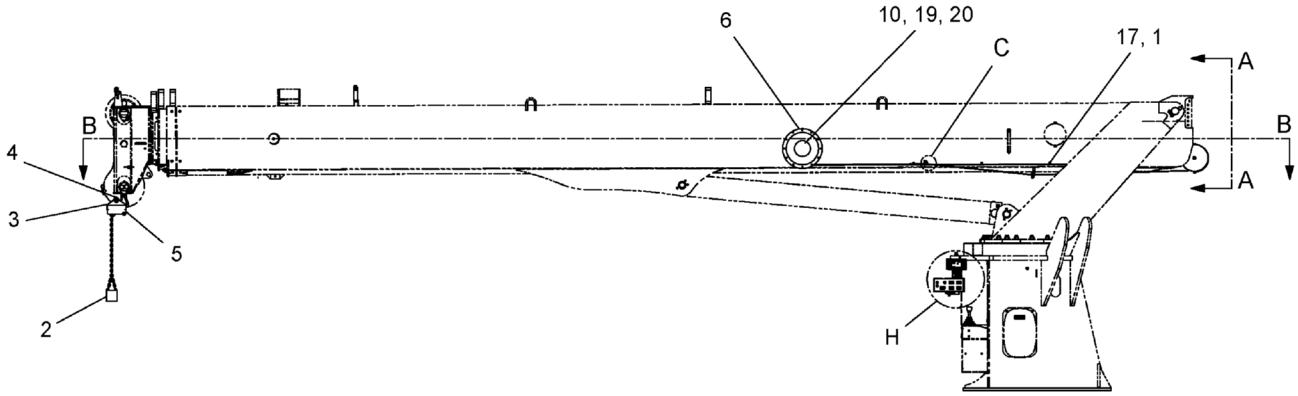

SECTION B - B

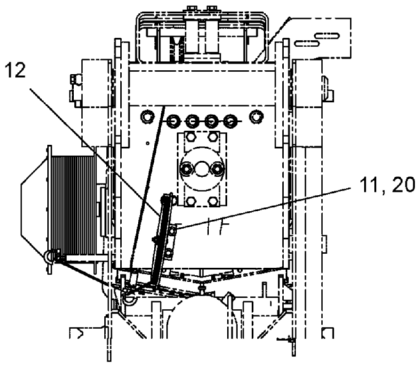

SECTION A - A

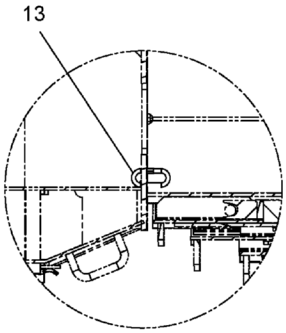

DETAIL E

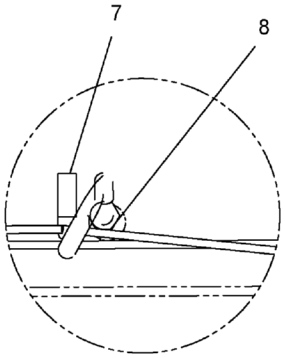

DETAIL C

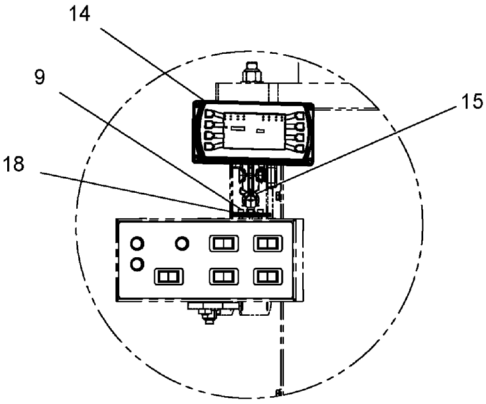

DETAIL H

WHEN ORDERING PARTS, SPECIFY MODEL NUMBER, SERIAL NUMBER AND DESCRIPTION OF PARTS REQUIRED

REF	PART NO.	DESCRIPTION	QTY
	T117601 (Rev. C)	*Installation, ATB-LMI*	
1	201-00171	Clamp 0.125 DIA Tube	5
2	717 0882	Counterweight, W/Chain	1
3	729-02729	Bracket Weldment, LMI-ATB Switch	1
4	774-00054	Adapter Bracket, ATB SW	1
5	861-90434	ATB Switch, HVY Duty	1
6	861-90532	Reel ASSY, Greer	1
7	865-00029	Cable Guide, 1.00 DIA	2
8	N05-375C000-25	Nut, HEX Jam 0.375-16, ST Z GR5	2
9	S14-190C750-H2	SCR, SHCS 10-24 X 0.75, ST Z	3
10	SHF-375C750-25	SCR, HHCS FT 0.375-16 X 0.75, ST SQC G5	3
11	SHF-375CA00-25	SCR, HHCS FT 0.375-16 X 1.00, ST Z G5	2
12	**T103999**	ASSY, LMI Sheave (see page 170)	1
13	T104902	Link, Quick	1
14	T117745	Display, Greer Insight	1
15	T119215	Ram Mount, Greer Insight Display	1
16*	T125524	Cable ASSY, 10' EXT.	1
17	VBB-187X450-L5	RVT, BTNHD, BLND 0.187 X 0.45, AL	5
18	W07-190X000-20	WSH, LCK, MED SPLT 10, ST Z	3
19	W07-375X000-20	WSH, LCK, MED SPLT 0.375, ST Z	3
20	WBR-37RXA00-20	WSH, FL TYPB-REG 0.375, ST Z	5
21*	**T117601-RCI Power**	Harness, RCI Power (see page 171)	1

* ITEM NOT SHOWN IN ILLUSTRATION

WHEN ORDERING PARTS, SPECIFY MODEL NUMBER, SERIAL NUMBER AND DESCRIPTION OF PARTS REQUIRED

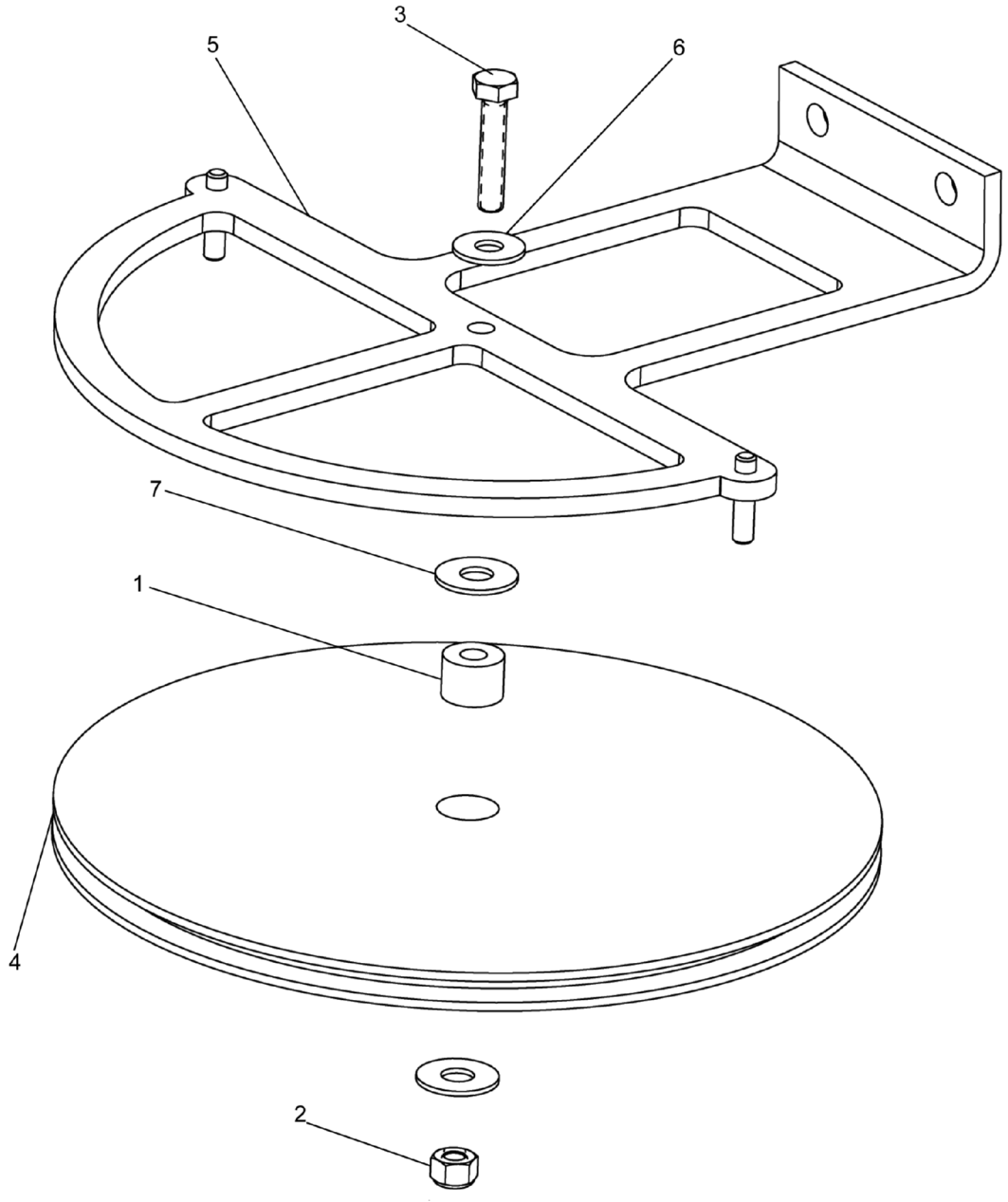

REF	PART NO.	DESCRIPTION	QTY
	T103999 (Rev. B)	*ASSY, LMI Sheave*	
1	001-10051	Sheave Axle	1
2	NYL-312C000-25	Nut, HEX NYL-INS 0.312-18, ST Z G5	1
3	SHF-312CA50-25	SCR, HHCS FT 0.312-18X1.50, STZ G5	1
4	T103997	Sheave, Internal LMI	1
5	T104002	Weldment, LMI Sheave	1
6	WBR-31RX875-20	WSH, FL TYPB-REG 0.3125, ST Z	1
7	WBR-37RXA00-20	WSH, FL TYPB-REG 0.375, ST Z	2

WHEN ORDERING PARTS, SPECIFY MODEL NUMBER, SERIAL NUMBER AND DESCRIPTION OF PARTS REQUIRED

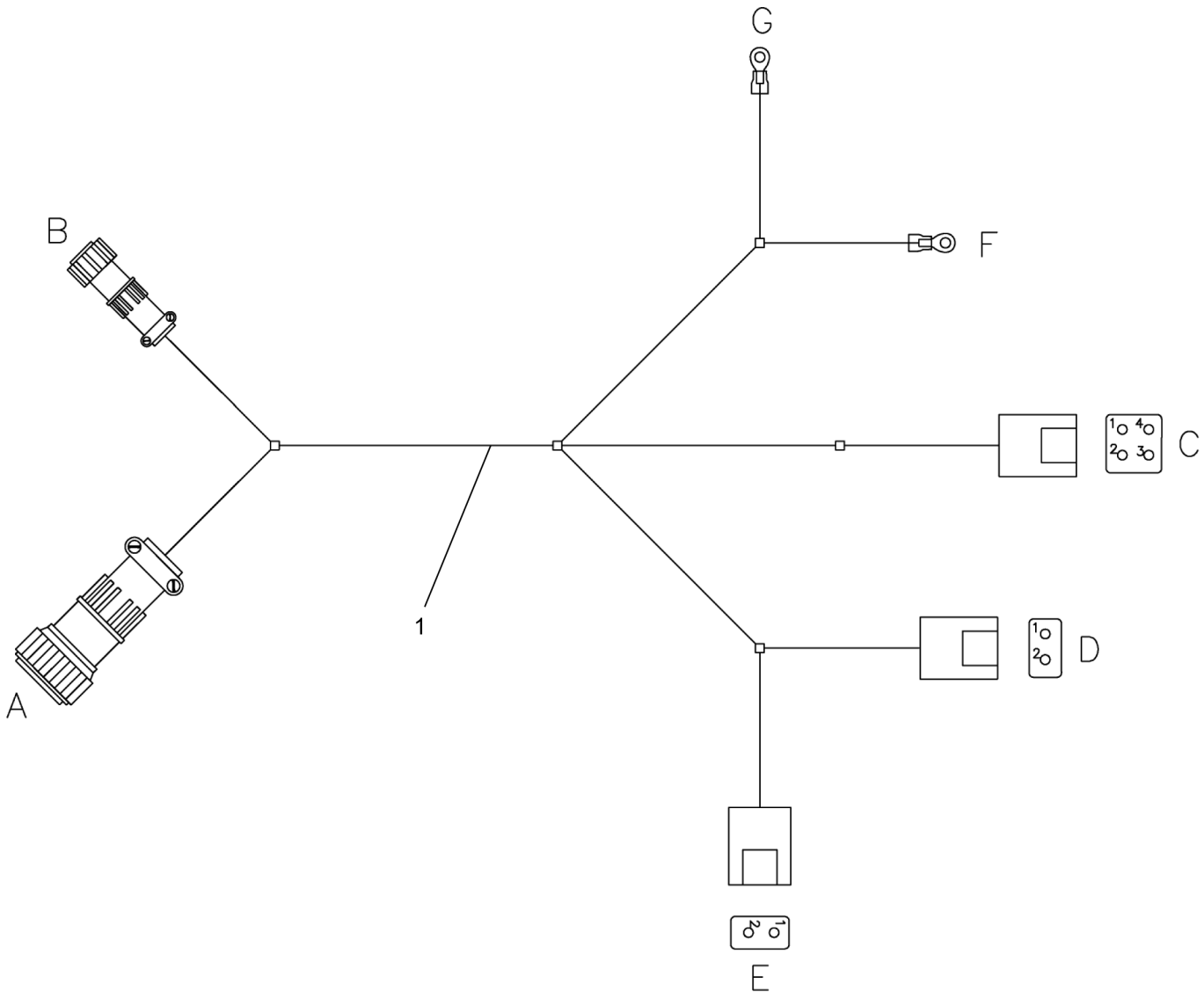

REF	PART NO.	DESCRIPTION	QTY
	T117601-RCI Power (Rev. 00)	*Harness, RCI Power*	
1	T117809	Harness, RCI Power	1

WHEN ORDERING PARTS, SPECIFY MODEL NUMBER, SERIAL NUMBER AND DESCRIPTION OF PARTS REQUIRED

CHAPTER NO. 2

28-106 LOWER STRUCTURE

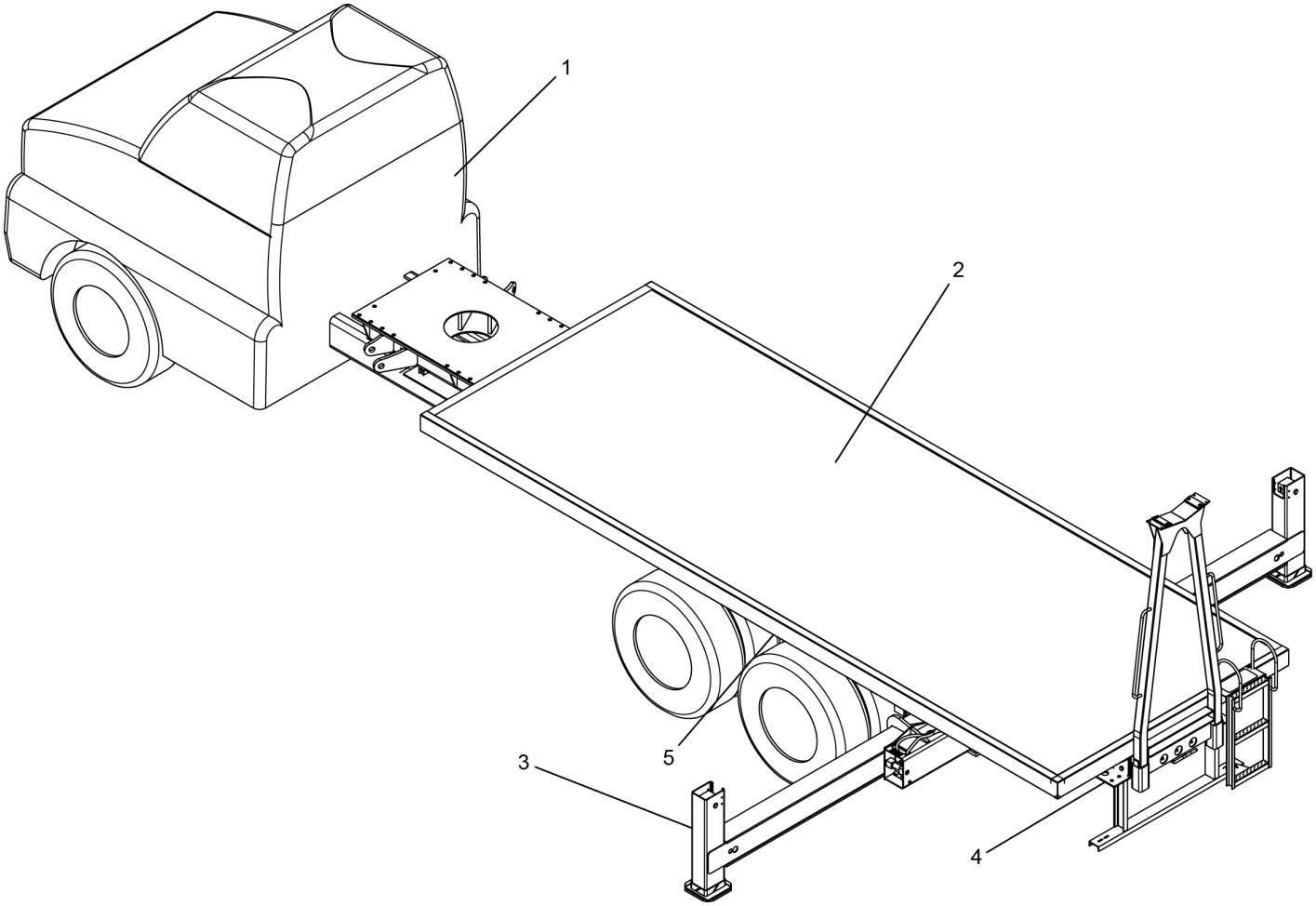

WHEN ORDERING PARTS, SPECIFY MODEL NUMBER, SERIAL NUMBER AND DESCRIPTION OF PARTS REQUIRED

REF	PART NO.	DESCRIPTION	QTY
	28-106-LWR-STR (Rev. 00)	*28-106 LOWER STRUCTURE*	
1	**28-106-CHASSIS***	Truck Chassis (see page 177)	1
2	**28-106-FLATBED***	Flatbed Options (see page 179)	1
3	**28-106-O/R***	Outriggers (see page 188)	1
4	**T119103**	Subframe Installation (see page 204)	1
5	**T151475**	Brackets W/Mud Flaps (see page 208)	1
5A	**T152436**	Brackets W/O Mud Flaps (see page 209)	1
6**	**521-00084-6**	Auto Trans, +12" Hose (see page 210)	1
6A	**521-00084-7**	Manual 8 Bolt PTO, +12" Hose (see page 214)	1
7**	**T130215**	Hydraulic Tank Shut Off Valve INSTL (see page 219)	1
8**	350-00206	PTO, Hot Shift Generic	1
8A	350-00208	PTO E/shift Sterling LT7501 2008/09 Tandem Axle	1
9**	**736-00001-1**	Fire Extinguisher Installation (see page 220)	1
10**	**T117808-02**	Fifth Outrigger Jack (see page 221)	1
11**	**765-00059-1**	INSTL, 34.00 Front Jack (see page 222)	1
11A	**765-00059-2**	INSTL, 46.00 Front Jack (see page 227)	1

* NOT PURCHASABLE AT THIS LEVEL
** NOT SHOWN IN ILLUSTRATION

WHEN ORDERING PARTS, SPECIFY MODEL NUMBER, SERIAL NUMBER AND DESCRIPTION OF PARTS REQUIRED

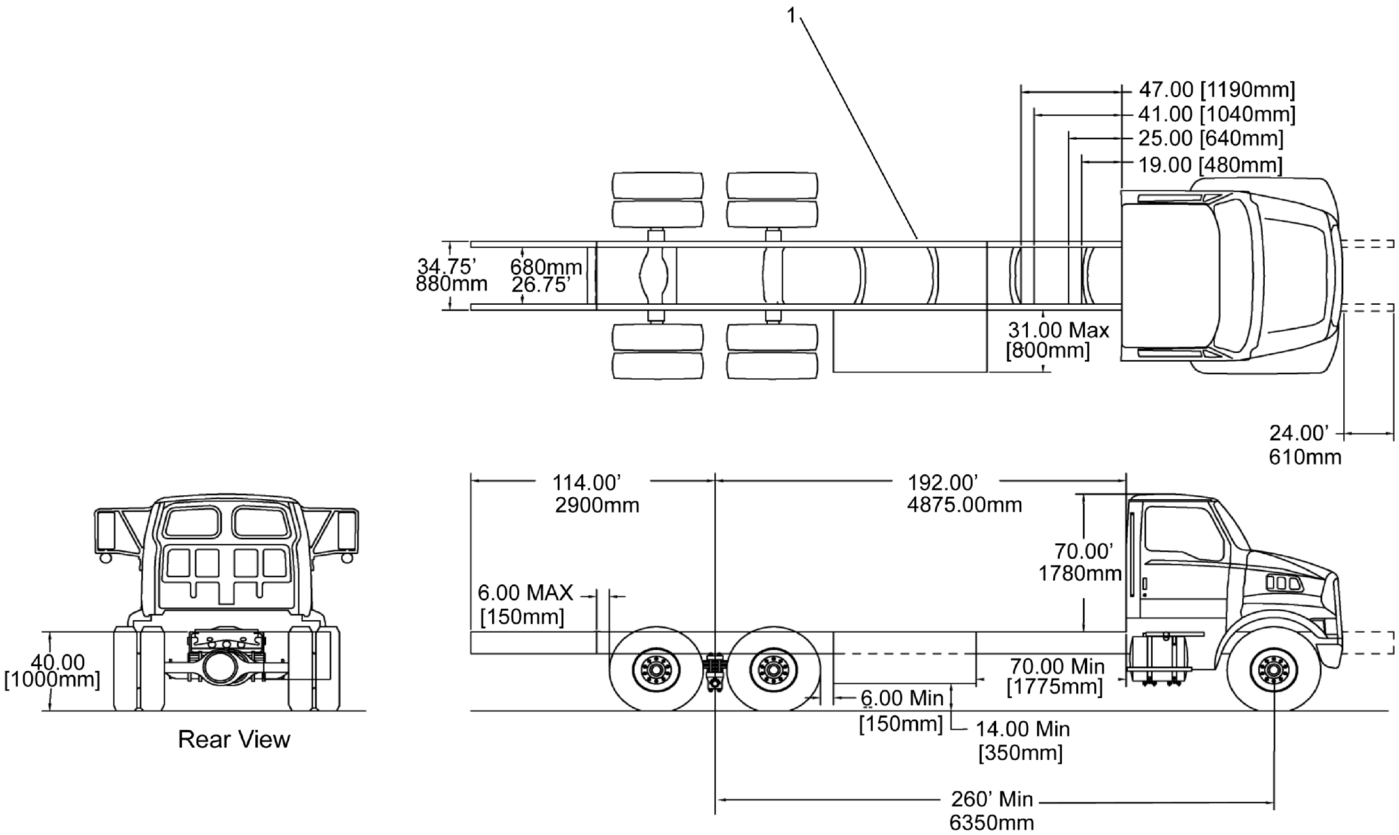

Refer to Truck Chassis manufacturer (Freightliner) for truck repair/replacement parts.

RECORD VEHICLE/MACHINE INFORMATION BELOW FOR USE WHEN ORDERING PARTS

Truck Chassis Manufacturer_____ Model _____	Comments
Boom Truck Model No. _____ Serial No. _____	Comments
Optional Equipment _____	Comments

WHEN ORDERING PARTS, SPECIFY MODEL NUMBER, SERIAL NUMBER AND DESCRIPTION OF PARTS REQUIRED

REF	PART NO.	DESCRIPTION	QTY
	28-106-CHASSIS* (Rev. 00)	*Truck Chassis*	
1	T105998	Chassis Requirements	1

* NOT PURCHASABLE AT THIS LEVEL

WHEN ORDERING PARTS, SPECIFY MODEL NUMBER, SERIAL NUMBER AND DESCRIPTION OF PARTS REQUIRED

REF	PART NO.	DESCRIPTION	QTY
	28-106-FLATBED* (Rev. 00)	*Flatbed Options*	
1	**T115226**	Flatbed ASSY, 22' STD Duty Steel (see page 180)	1
1A	**T115228**	Flatbed ASSY, 22' STD Duty Wood (see page 183)	1
1B	**T115227**	Flatbed ASSY, 22' SUP Duty Steel (see page 184)	1
1C	**T115229**	Flatbed ASSY, 22' SUP Duty Wood (see page 185)	1
2	**696-00032-1**	Flatbed INSTL, STD Duty (see page 186)	1
2A	**696-00032-2**	Flatbed INSTL, SUP Duty (see page 187)	1

* NOT PURCHASABLE AT THIS LEVEL

WHEN ORDERING PARTS, SPECIFY MODEL NUMBER, SERIAL NUMBER AND DESCRIPTION OF PARTS REQUIRED

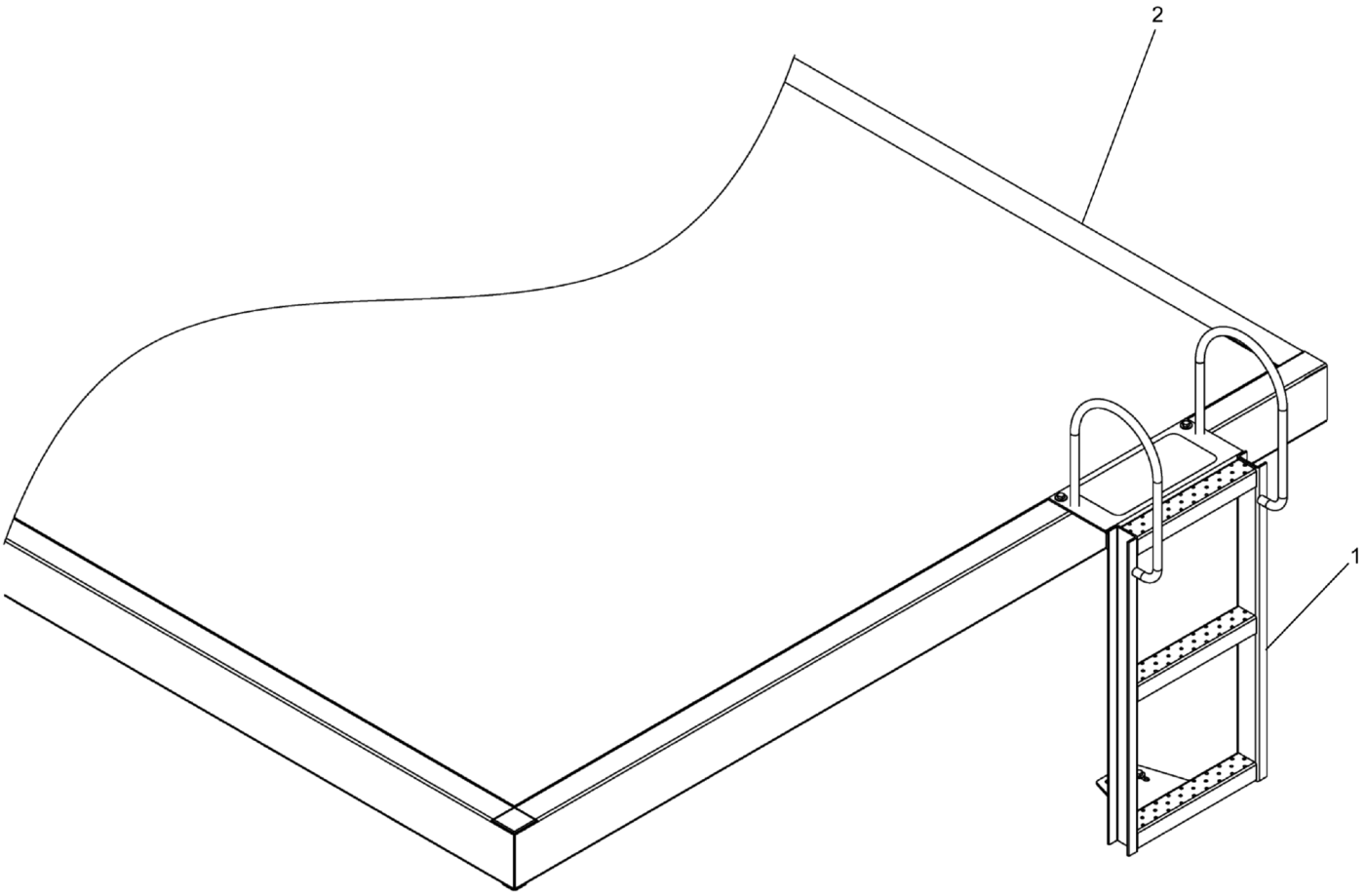

REF	PART NO.	DESCRIPTION	QTY
	T115226 (Rev. A)	*Flatbed ASSY, 22' STD Duty Steel*	
1	**024-00008**	Ladder Kit Installation, Steel Bed (see page 181)	1
2	600-38215	Flatbed, Steel, STND Duty 240.00	1

WHEN ORDERING PARTS, SPECIFY MODEL NUMBER, SERIAL NUMBER AND DESCRIPTION OF PARTS REQUIRED

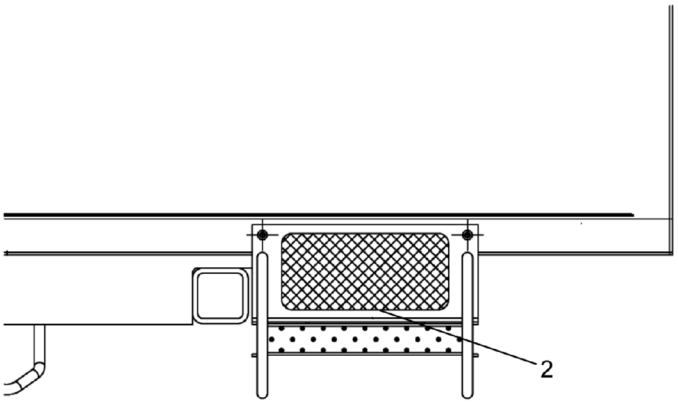
2

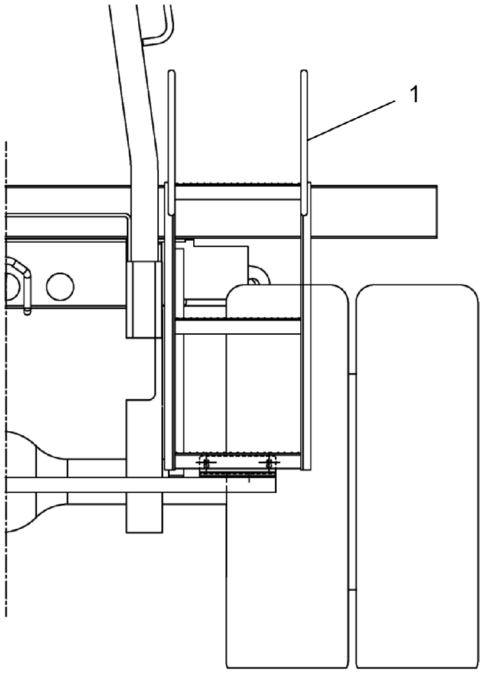
1

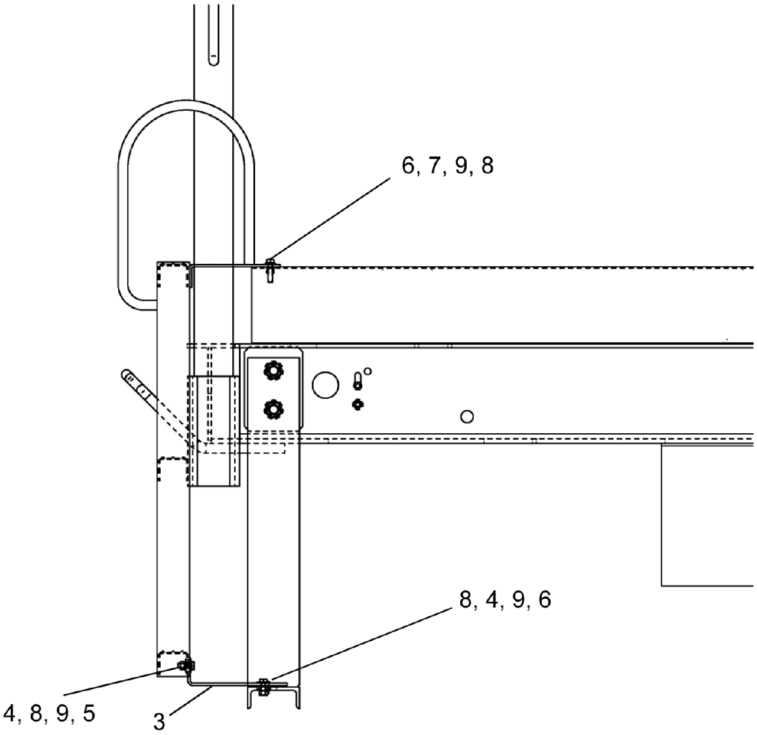
6, 7, 9, 8
8, 4, 9, 6
4, 8, 9, 5
3

REF	PART NO.	DESCRIPTION	QTY
	024-00008 (Rev. B)	*Ladder Kit Installation, Steel Bed*	
1	024-00009	Ladder Weldment	1
2	209-00871	Anti Slip Tape, Ladder	1
3	789-05812	Ladder SPT BRKT	1
4	N04-375C000-25	Nut, HEX 0.375-16, ST Z GR5	4
5	SHF-375CA00-25	SCR, HHCS FT 0.375-16 X 1.00, ST Z G5	4
6	SHF-375CA50-25	SCR, HHCS FT 0.375-16 X 1.50, STZ G5	2
7	T11-375C000-CD	Thread-SERT 0.375-16, ST CAD	2
8	W07-375X000-20	WSH, LCK, MED SPLT 0.375, ST Z	6
9	WBR-37RXA00-20	WSH, FL TYPB-REG 0.375, ST Z	10

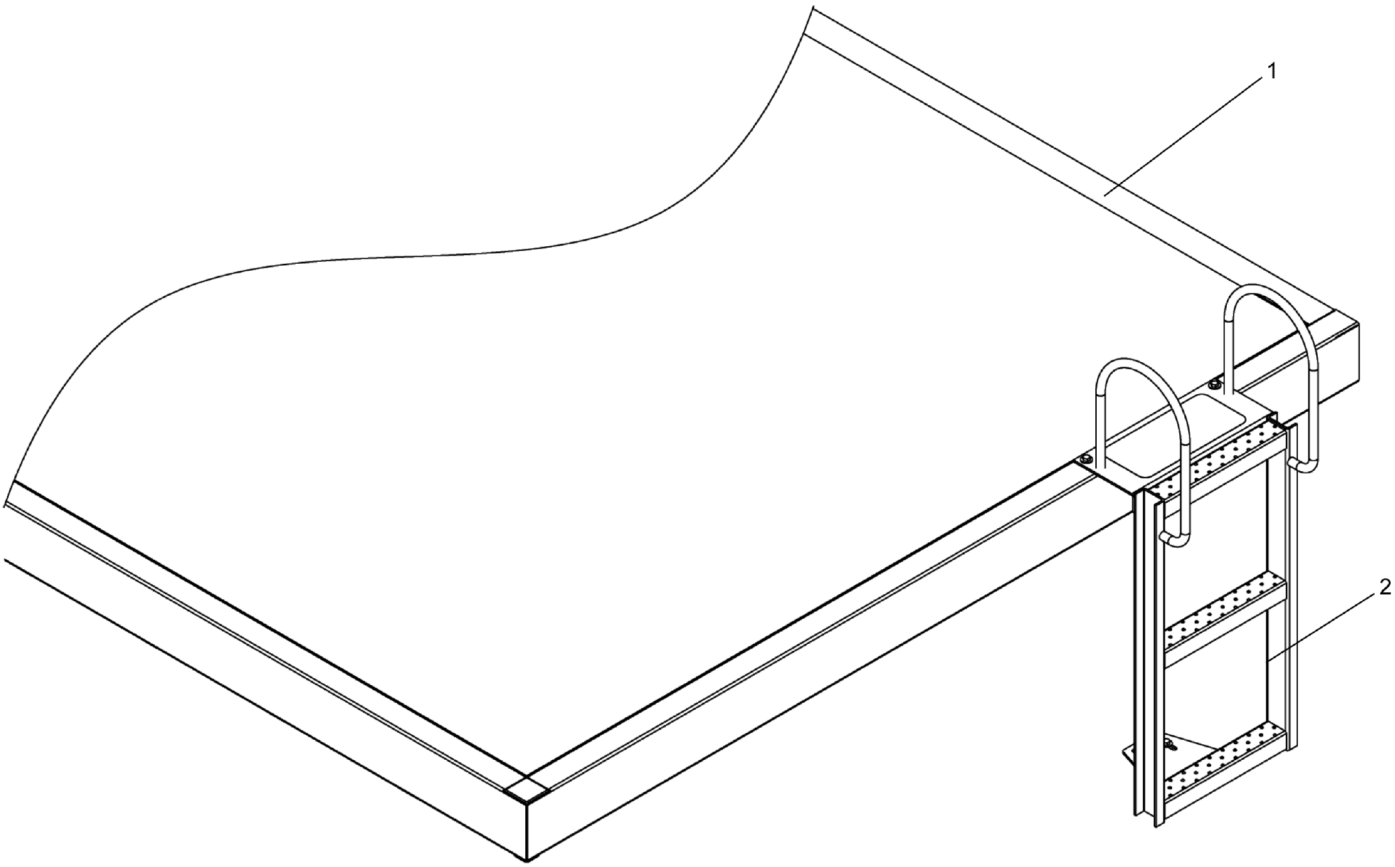

REF	PART NO.	DESCRIPTION	QTY
	T115228 (Rev. A)	*Flatbed ASSY, 22' STD Duty Wood*	
1	600-38210	Flatbed, 22' Wood	1
2	T113659	INSTL, Ladder Kit, Wood Bed	1

WHEN ORDERING PARTS, SPECIFY MODEL NUMBER, SERIAL NUMBER AND DESCRIPTION OF PARTS REQUIRED

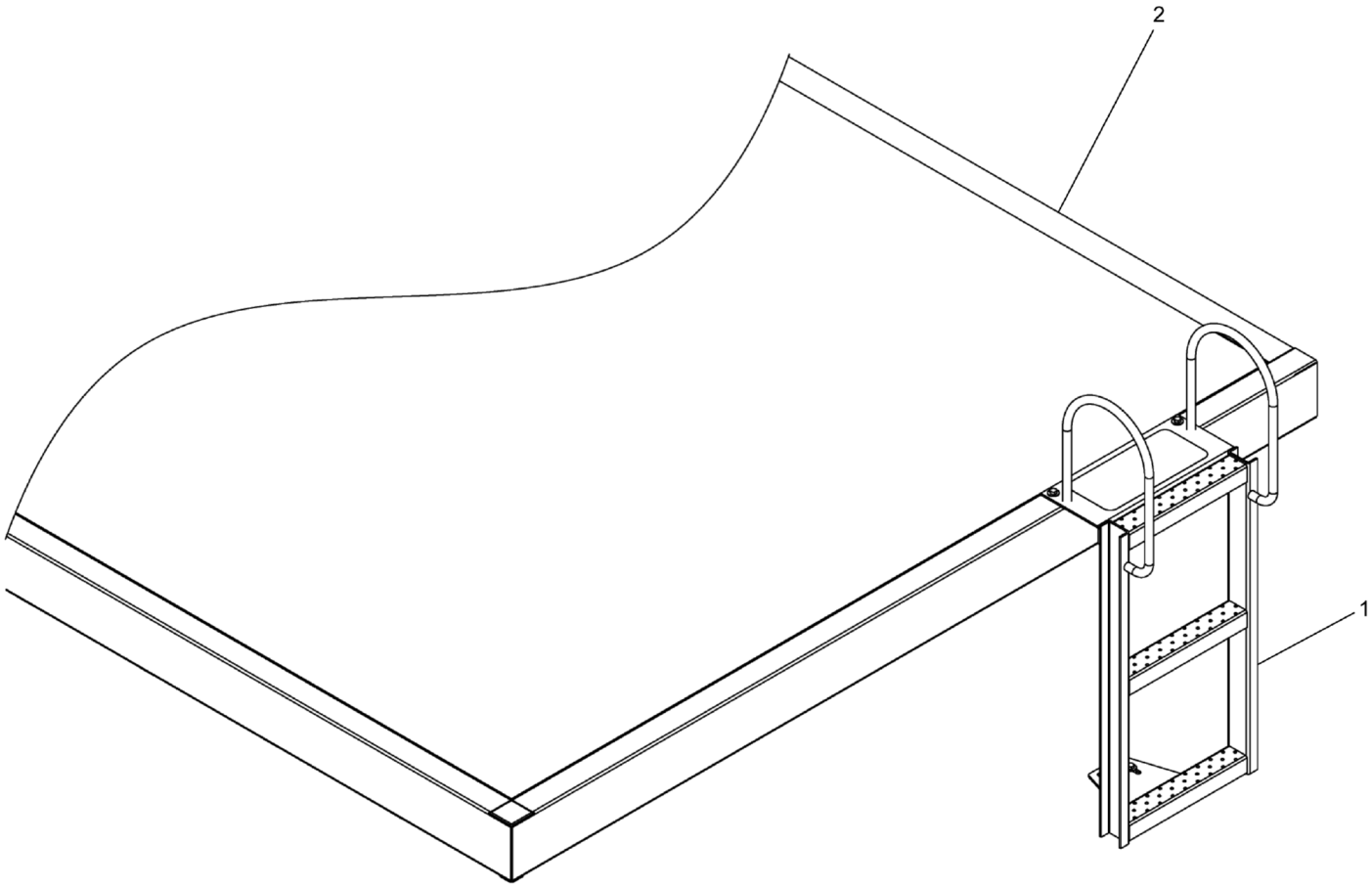

REF	PART NO.	DESCRIPTION	QTY
	T115227 (Rev. A)	*Flatbed ASSY, 22' SUP Duty Steel*	
1	**024-00008**	Ladder Kit Installation, Steel Bed (see page 181)	1
2	600-38224	Flatbed, 22 FT Steel, Super Duty	1

WHEN ORDERING PARTS, SPECIFY MODEL NUMBER, SERIAL NUMBER AND DESCRIPTION OF PARTS REQUIRED

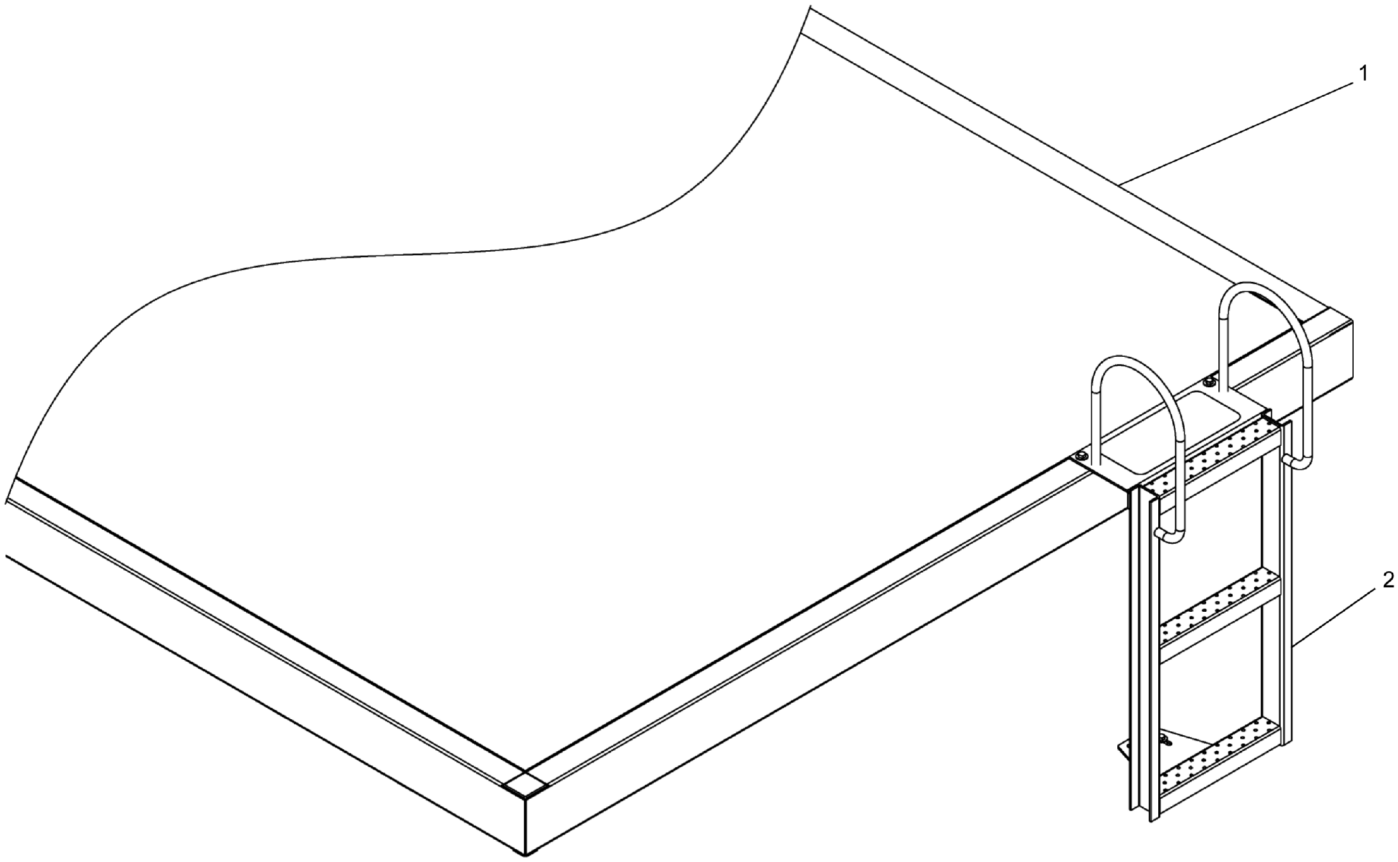

REF	PART NO.	DESCRIPTION	QTY
	T115229 (Rev. A)	*Flatbed ASSY, 22' SUP Duty Wood*	
1	600-38222	Flatbed, 22 FT Wood, Super Duty	1
2	T113659	INSTL, Ladder Kit, Wood Bed	1

WHEN ORDERING PARTS, SPECIFY MODEL NUMBER, SERIAL NUMBER AND DESCRIPTION OF PARTS REQUIRED

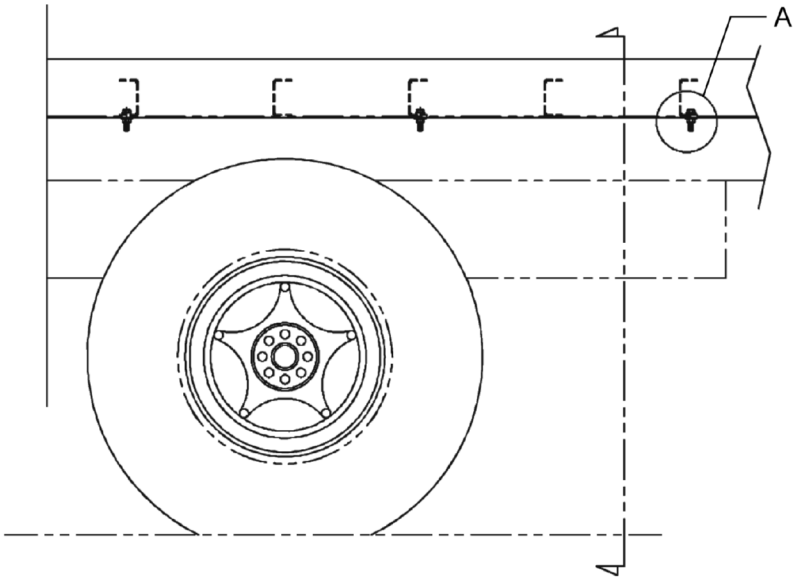

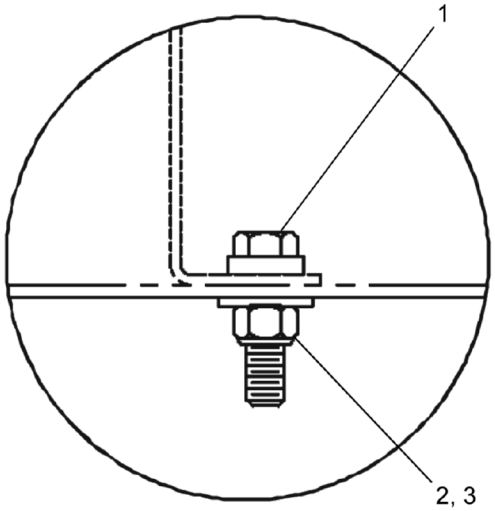

REF	PART NO.	DESCRIPTION	QTY
	696-00032-1 (Rev. C)	*Flatbed INSTL, STD Duty*	
1	709-01925	Flatbed Bolt Weld 1/2-13 X 2.00 GR5	12
1.1	783-01239	SUPP Bar DET-Flatbed Tie	12
2	NYL-500C000-25	Nut, HEX NYL - INS 0.50-13, ST Z G5	12
3	WAN-50NX000-20	WSH, FL TYPA-NRW 0.50, ST Z	12
4*	783-03723	Track Mount Bar Long	2

* ITEM NOT SHOWN IN ILLUSTRATION

WHEN ORDERING PARTS, SPECIFY MODEL NUMBER, SERIAL NUMBER AND DESCRIPTION OF PARTS REQUIRED

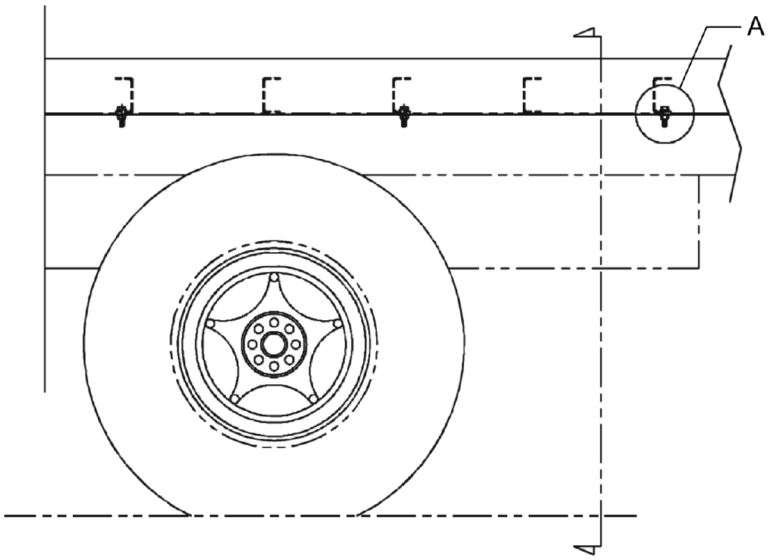

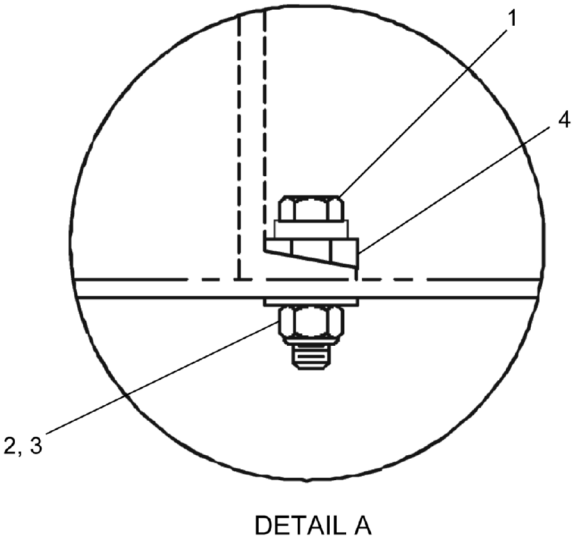

REF	PART NO.	DESCRIPTION	QTY
	696-00032-2 (Rev. D)	*Flatbed INSTL, SUP Duty*	
1	709-01925	Flatbed Bolt Weld 1/2-13 X 2.00 GR5	12
1.1	783-01239	SUPP Bar DET-Flatbed Tie	12
2	NYL-500C000-25	Nut, HEX NYL - INS 0.50-13, ST Z G5	12
3	WAN-50NX000-20	WSH, FL TYPA-NRW 0.50, ST Z	12
4	WBV-500X001	Bevel Washer 1/2 Galvanize	12

WHEN ORDERING PARTS, SPECIFY MODEL NUMBER, SERIAL NUMBER AND DESCRIPTION OF PARTS REQUIRED

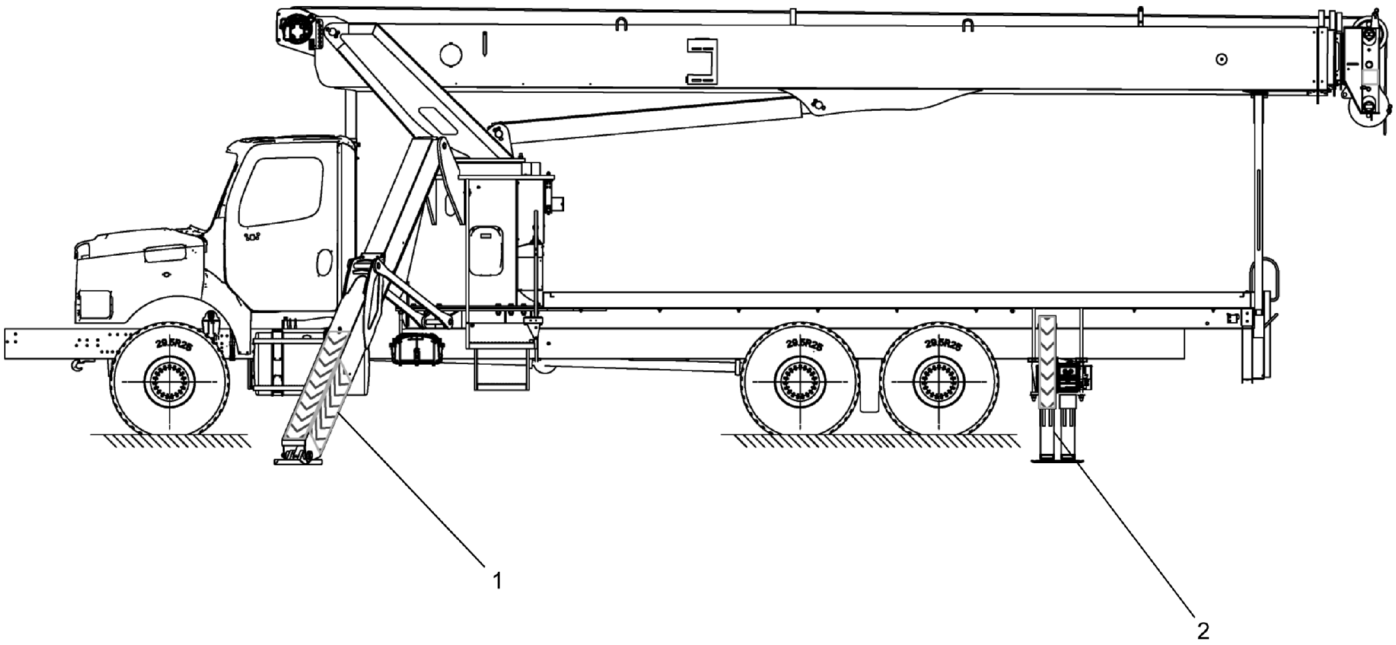

REF	PART NO.	DESCRIPTION	QTY
	28-106-O/R* (Rev. 00)	*Outriggers*	
1	**T119104**	Main Outrigger Installation (see page 189)	1
2	**T121698**	Auxiliary Outrigger Installation (see page 192)	1

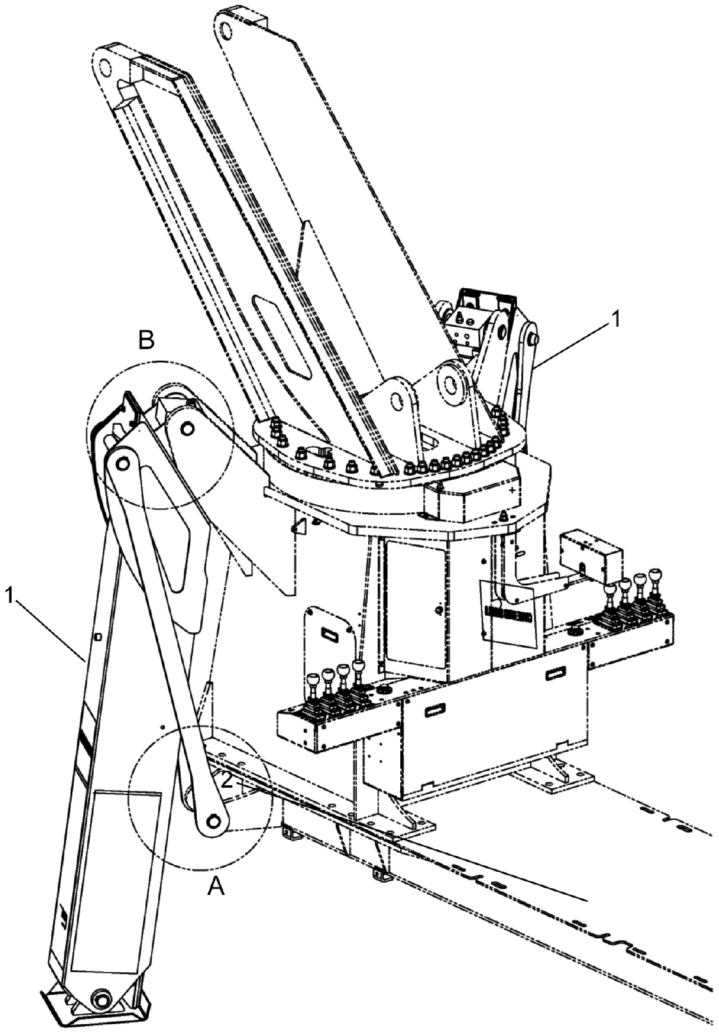

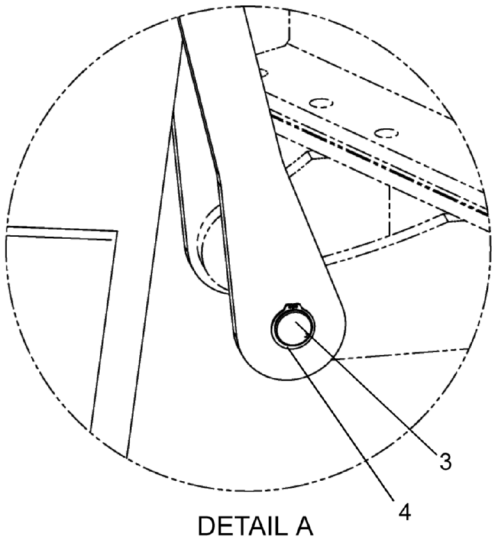

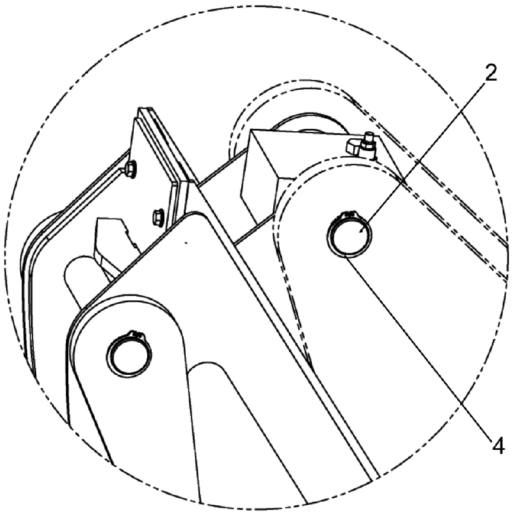

REF	PART NO.	DESCRIPTION	QTY
	T119104 (Rev. A)	*Main Outrigger Installation*	
1	**760-90060**	Leg ASSY, Main Outrigger (see page 190)	2
2	870-80020	Pin, Outrigger 1.75 X 12.20	2
3	870-80021	Pin, Outrigger 1.75 X 12.875	2
4	REX-A75X109-BP	Ring, EXTSNP HVY 1.75 X 0.109, ST BP	8

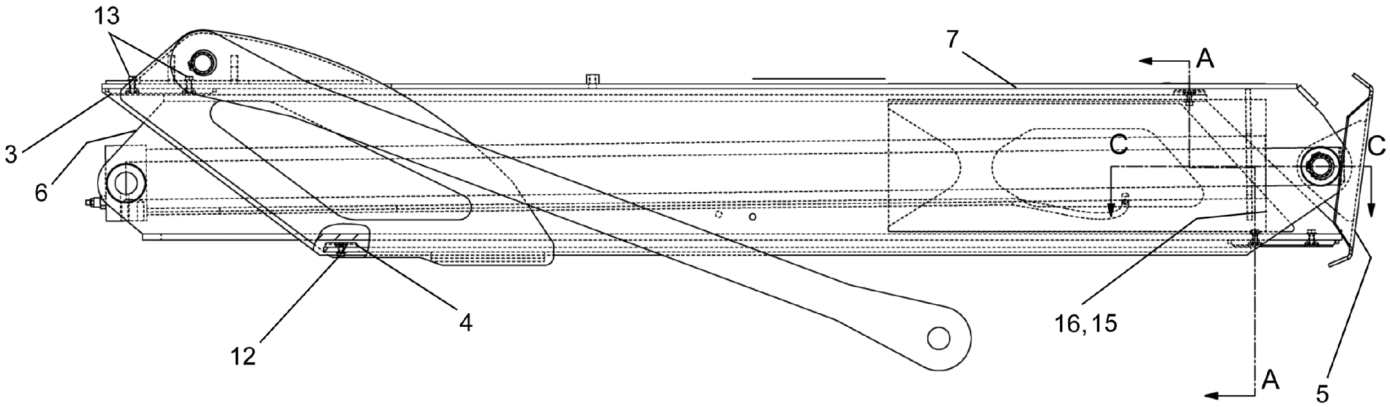
13
7
A
3
6
C
C
4
16, 15
12
A
5

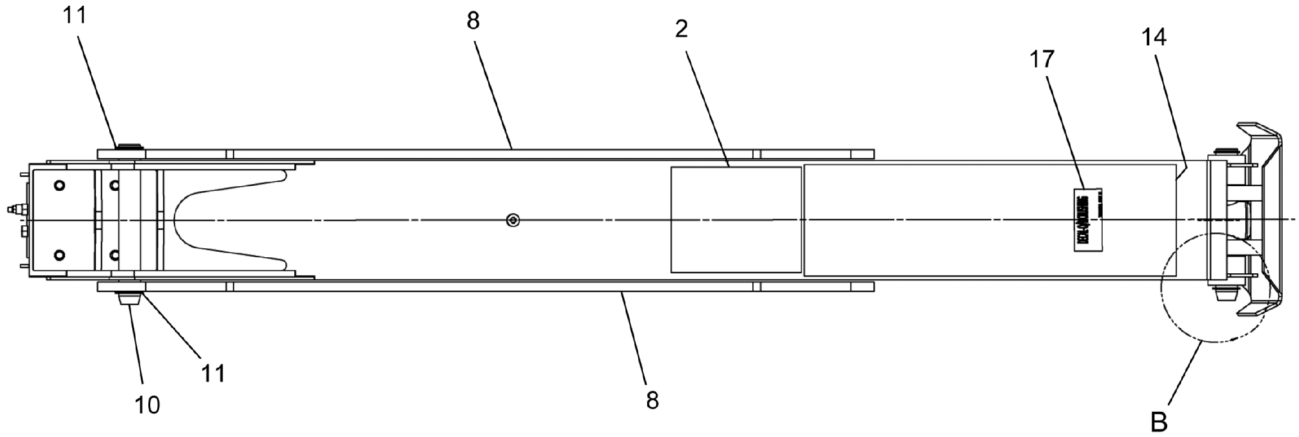
11
8
2
17
14
11
10
8
B

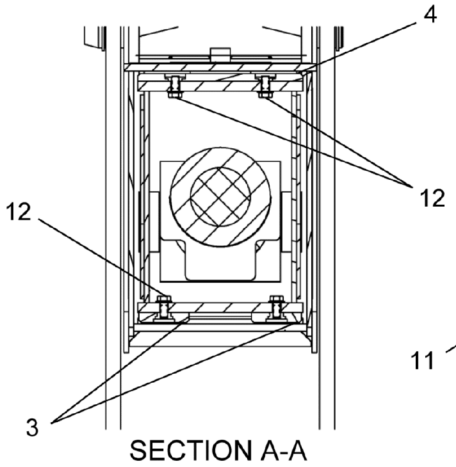
4
12
12
3
SECTION A-A

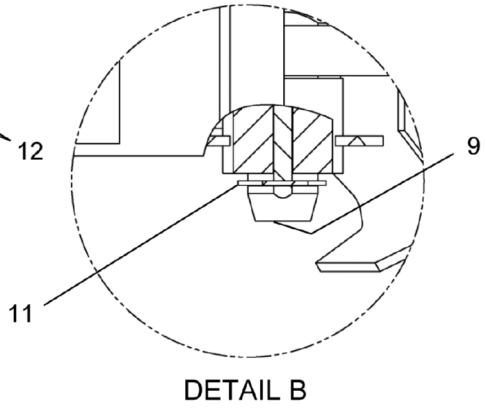
9
11
DETAIL B

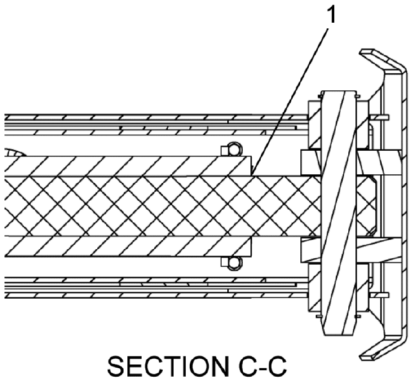
1
SECTION C-C

REF	PART NO.	DESCRIPTION	QTY
	760-90060 (Rev. G)	*Leg ASSY, Main Outrigger*	
1	540-90103	CYL, Outrigger Leg, Main	1
2	1006862	Crane Hand Signals	1
3	729-02819	Wear Pad, 8.25 X 2.50 x 0.50	4
4	729-02908	Wear Pad, 8.25 X 2.50 x 0.375	2
5	760-20483	O/R Shoe Weldment	1
6	760-90061	Inner Leg Weldment	1
7	760-90062	Outer Leg Weldment	1
8	789-06110	Tension Link	2
9	870-80020	Pin, Outrigger 1.75 X 12.20	1
10	870-80021	Pin, Outrigger 1.75 X 12.875	1
11	REX-A75X109-BP	Ring, EXTSNP HVY 1.75 X 0.109, ST BP	4
12	SFS-375C750-27	SCR, HXFLG SER 0.375-16X0.75, G8.2	8
13	SFS-375CA00-27	SCR, HXFLG SER 0.375-16X1.00, G8.2	4
14	T113612	Decal, Main O/R Leg FRT Stripe	1
15	T113613	Decal, Main O/R Side Stripe	1
16	T113614	Decal, Main O/R Leg Side Stripe	1
17	T116671	Decal, A Frame Outrigger Crush	1

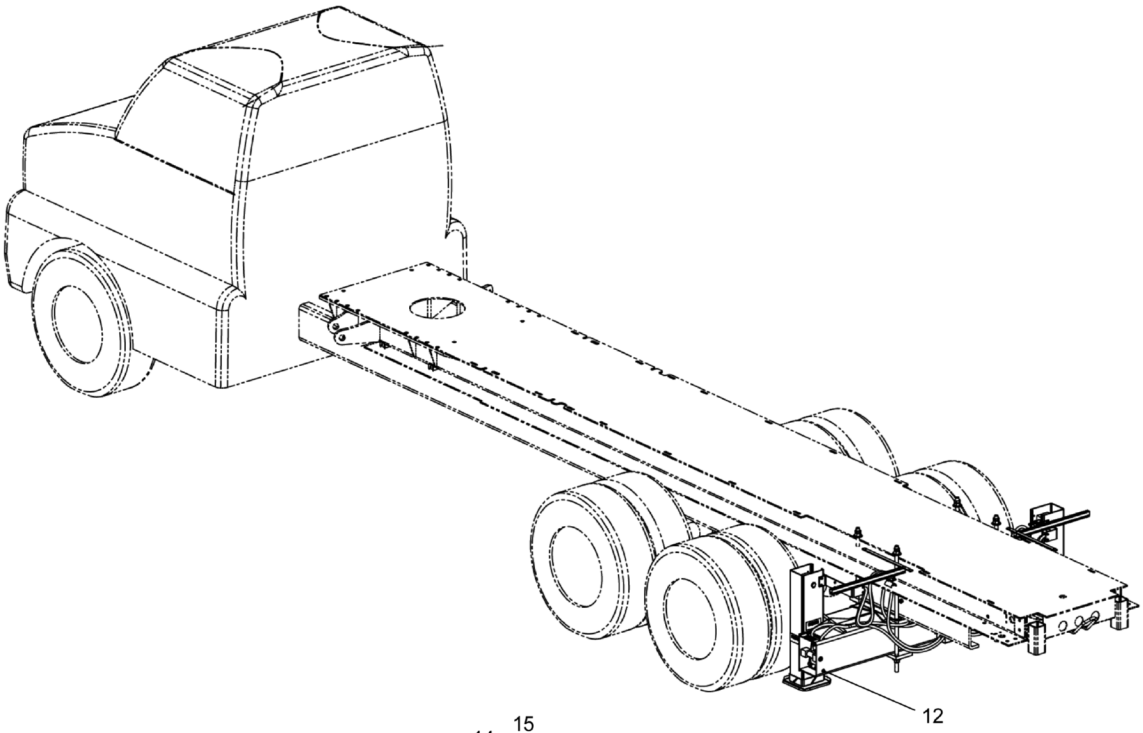

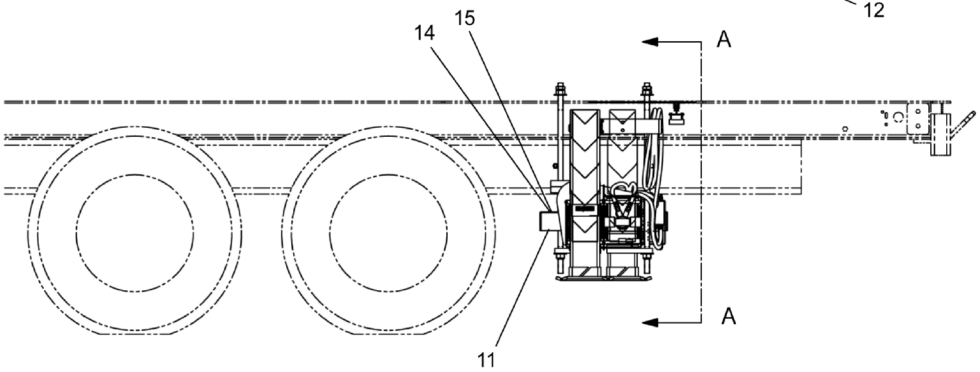

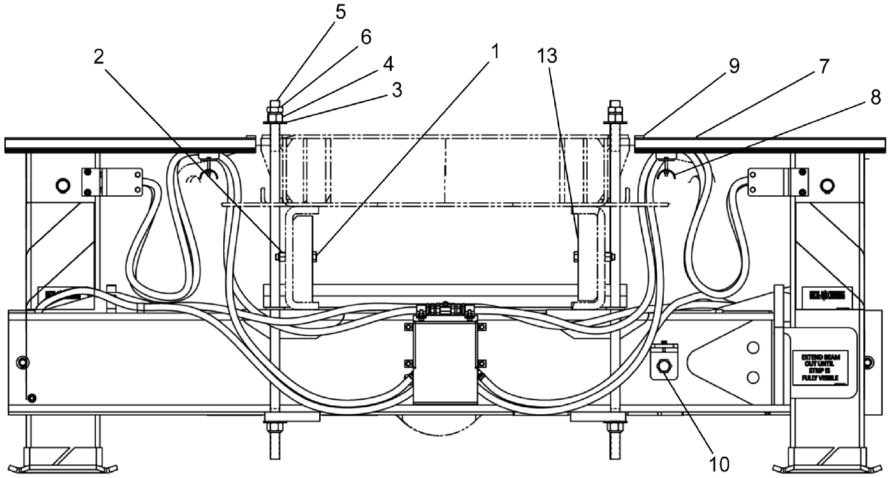

SECTION A-A

WHEN ORDERING PARTS, SPECIFY MODEL NUMBER, SERIAL NUMBER AND DESCRIPTION OF PARTS REQUIRED

REF	PART NO.	DESCRIPTION	QTY
	T121698 (Rev. C)	*Auxiliary Outrigger Installation*	
1	S01-625CD00-25	SCR, HHCS 0.625-11 X 4.00, ST SQC G5	4
2	NYL-625C000-25	Nut, HEX NYL-INS 0.625-11, ST SQC G5	4
3	WBR-A0RXB50-20	WSH, FL TYPB-REG 1.00, ST Z	8
4	NYL-A00S000-25	Nut, HEX NYL-INS 1.00-14, ST Z G5	8
5	220-09123	Tie Down Stud	4
6	N05-A00S000-25	Nut, HEX Jam 1.00-14, ST Z GR5	4
7	774-00046	Trolly Track-AUX O/R	2
8	774-00047	Trolly, Hose Support	2
9	783-03723	Track Mount Bar Long	2
10	T120217	Proximity Switch	2
11	T120495	Position Sensor Covery (Gray)	2
12	**T121681**	Horizontal Auxiliary Outrigger Assembly (see page 194)	1
13	709-01902-2	Frame Reinforcement	4
14	S01-250CA00-25	SCR, HHCS 0.25-20 X 1.00, ST Z GR5	2
15	W07-250X000-20	Washer, LCK, MED SPLT 0.25, ST SQC	2

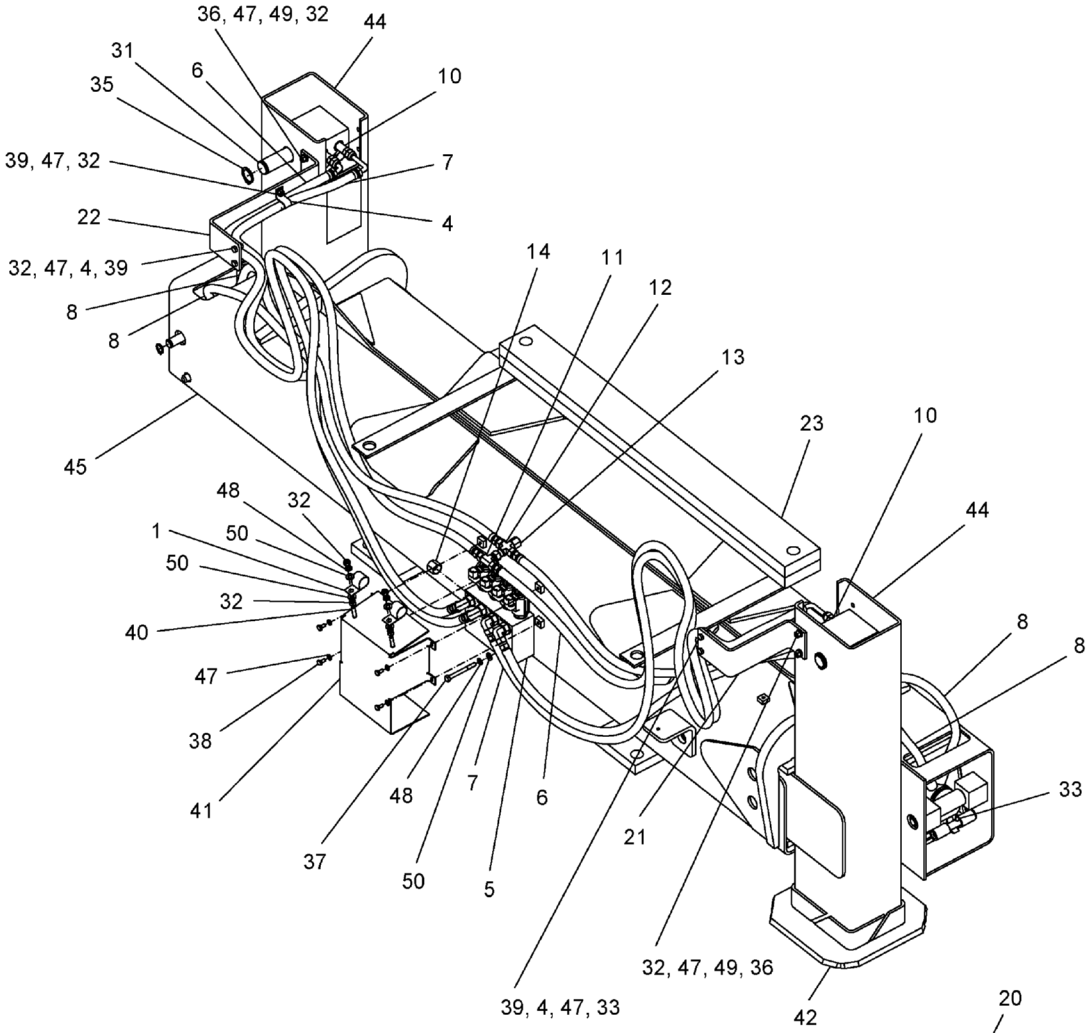

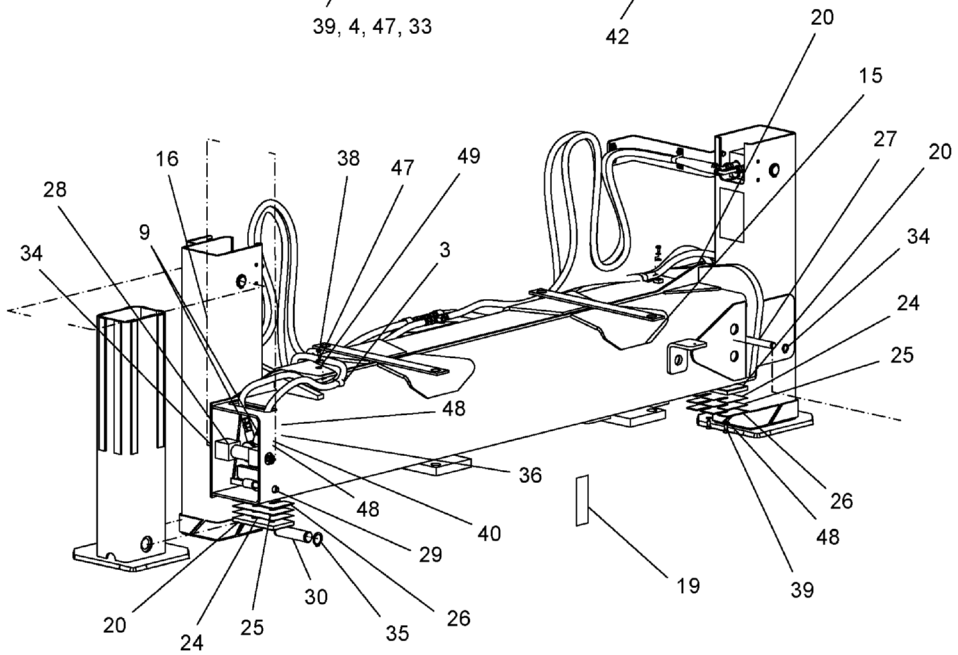

WHEN ORDERING PARTS, SPECIFY MODEL NUMBER, SERIAL NUMBER AND DESCRIPTION OF PARTS REQUIRED

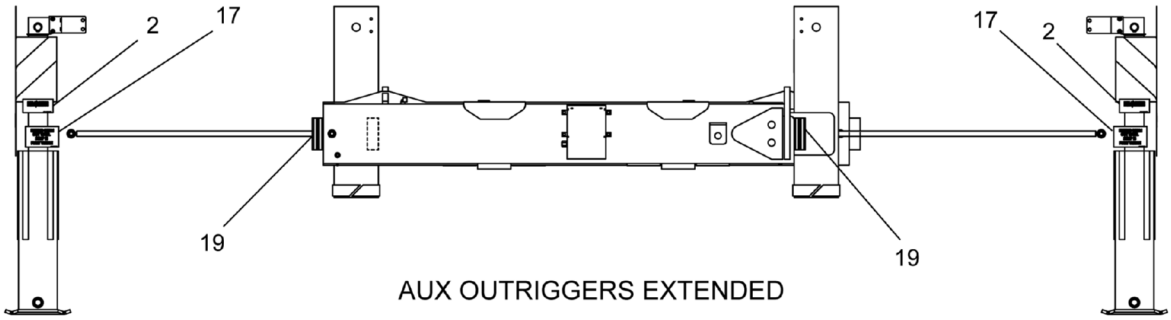

AUX OUTRIGGERS EXTENDED

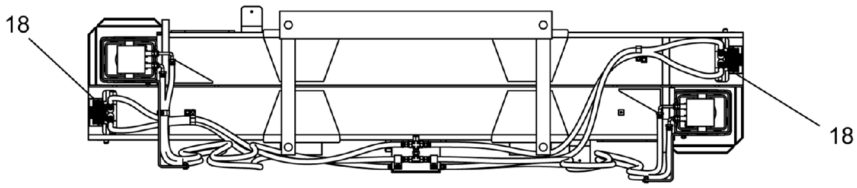

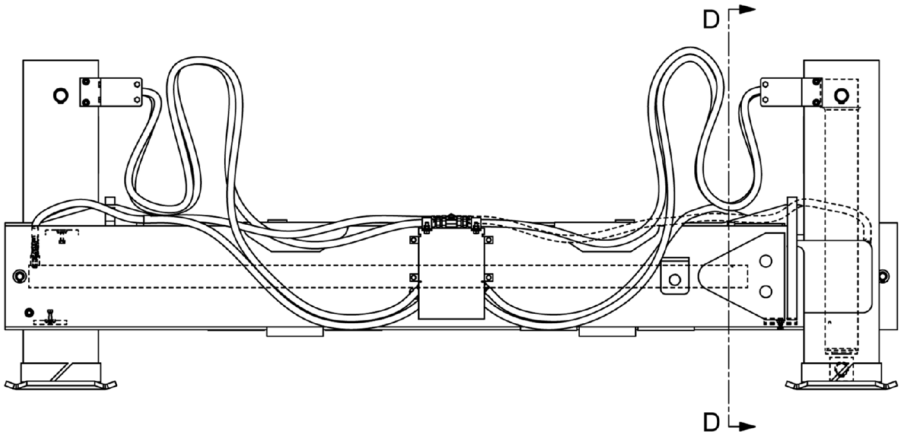

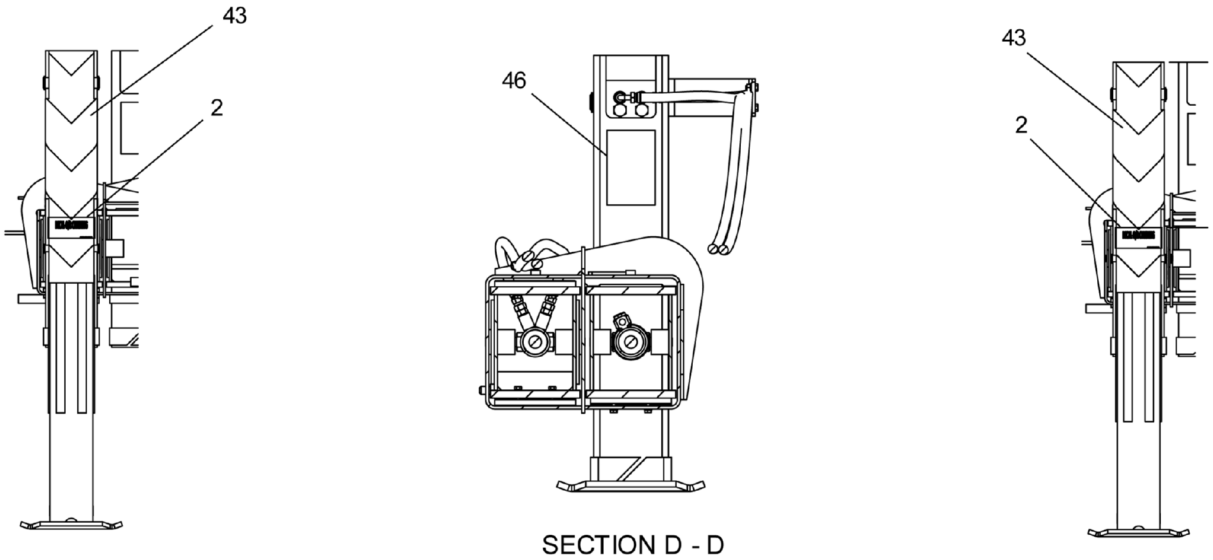

SECTION D - D

WHEN ORDERING PARTS, SPECIFY MODEL NUMBER, SERIAL NUMBER AND DESCRIPTION OF PARTS REQUIRED

REF	PART NO.	DESCRIPTION	QTY
	T121681 (Rev. C)	*Horizontal Auxiliary Outrigger Assembly*	
1	1240-53	Clamp	2
2	12400-1514	Decal-O/R Crushing	6
3	200B2007-54	Clamp, 0.62	2
4	201-00167	Hose Clamp-Double	3
5	**500-01850**	Assembly, AUX. Valve (see page 198)	1
6	502-21027	Hose Assembly, AUX Outrigger	2
7	502-21028	Hose Assembly, AUX Outrigger	2
8	502-21031	Hose ASSY, AUX. O/R Extend	4
9	513-40014	Adapter, MOFS-6/MORB-6	4
10	513-40015	Adapter, MOFS-6/MORB-6, L	4
11	516-90010	Tee, Swivel Branch (-6)	1
12	517-90007	Union Cross, (-6)	1
13	519-40007	CAP, OFS-6	1
14	519-50010	CAP, OFS-8	1
15	**540-00061**	AUX Outrigger EXT Cylinder (Gray) (see page 200)	2
16	**540-30181**	AUX Vertical Outrigger Cylinder (Gray) (see page 202)	2
17	651-00386	Decal-O/R BEAM	4
18	652-00469	Decal, Outrigger Beam Pin	2
19	659-00216	2" O/R Strip - Yellow	4
20	729-02238	Wear Pad 6.50 X 3.50 X 0.50	6
21	770-01820	Hose SUPT Bracket-C.S.	1
22	770-01840	Hose SUPT Bracket-S.S.	1
23	783-03010	Support Bar, AUX O/R	2
24	787-00255	Shim 6.50 X 3.50 X 0.040, AL6061	4
25	787-00256	Shim 6.50 X 3.50 X 0.0625, AL6061	4
26	787-00257	Shim 6.50 X 3.50 X 0.10, AL6061	4
27	870-10184	Cylinder Pin, Horizontal Rod End	2
28	870-10185	Cylinder Pin, HORZ Barrel End	2
29	870-10186	Lock Pin Horizontal AUX O/R	2
30	870-30211	Cylinder Pin, Vertical Rod End	2
31	870-30212	Cylinder Pin, Vertical Barrel End	2
32	N04-312C000-25	Nut, HEX 0.3125-18, ST SQC G5	14
33	P22-250XA50-G2	Pin, Spring SLTD 0.25 X 1.50, ST SQC	2
34	REX-750X078-BP	Ring, EXTSNP HVY 0.75 X 0.078, ST BP	8
35	REX-A25X093-BP	Ring, EXTSNP HVY 1.25 X 0.093, ST BP	8
36	S01-312CA00-25	SCR, HHCS 0.3125-18 X 1.00, ST SQC G5	8
37	S01-312CC00-25	SCR, HHCS 0.3125-18 X 3.00, ST SQC G5	2
38	SHF-250C500-25	SCR, HHCS FT 0.25-20 X 0.50, ST SQC G5	6
39	SHF-312C750-25	SCR, HHCS FT 0.312-18 X 0.75, ST SQC G5	10
40	SHF-312CA25-25	SCR, HHCS FT 0.312-18 X 1.25, ST SQC G5	6
41	T105996	Cover, Control Valve AUX. O/R	1
42	T107095	Outrigger Leg Weld Rear	2
43	T114587	Decal, AUX Outrigger Stripe	2
44	T121682	Weldment HORZ AUX O/R Inner	2
45	T121683	Housing Weld, AUX O/R	1
46	1006834	Decal, Fall Hazard Outrigger Beam	2
47	W07-250X000-20	Washer, LCK, MED SPLT 0.25, ST SQC	6
48	W07-312X000-20	WSH, LCK, MED SPLT 0.3125, ST SQC	26
49	WAN-25NX000-20	WSH, FL TYPA-NRW 0.25, ST Z	2

WHEN ORDERING PARTS, SPECIFY MODEL NUMBER, SERIAL NUMBER AND DESCRIPTION OF PARTS REQUIRED

REF	PART NO.	DESCRIPTION	QTY
	T121681 (Rev. C)	*Horizontal Auxiliary Outrigger Assembly*	
50	WAN-31NX000-20	WSH, FL TYPA-NRW 0.3125, ST SQC	10

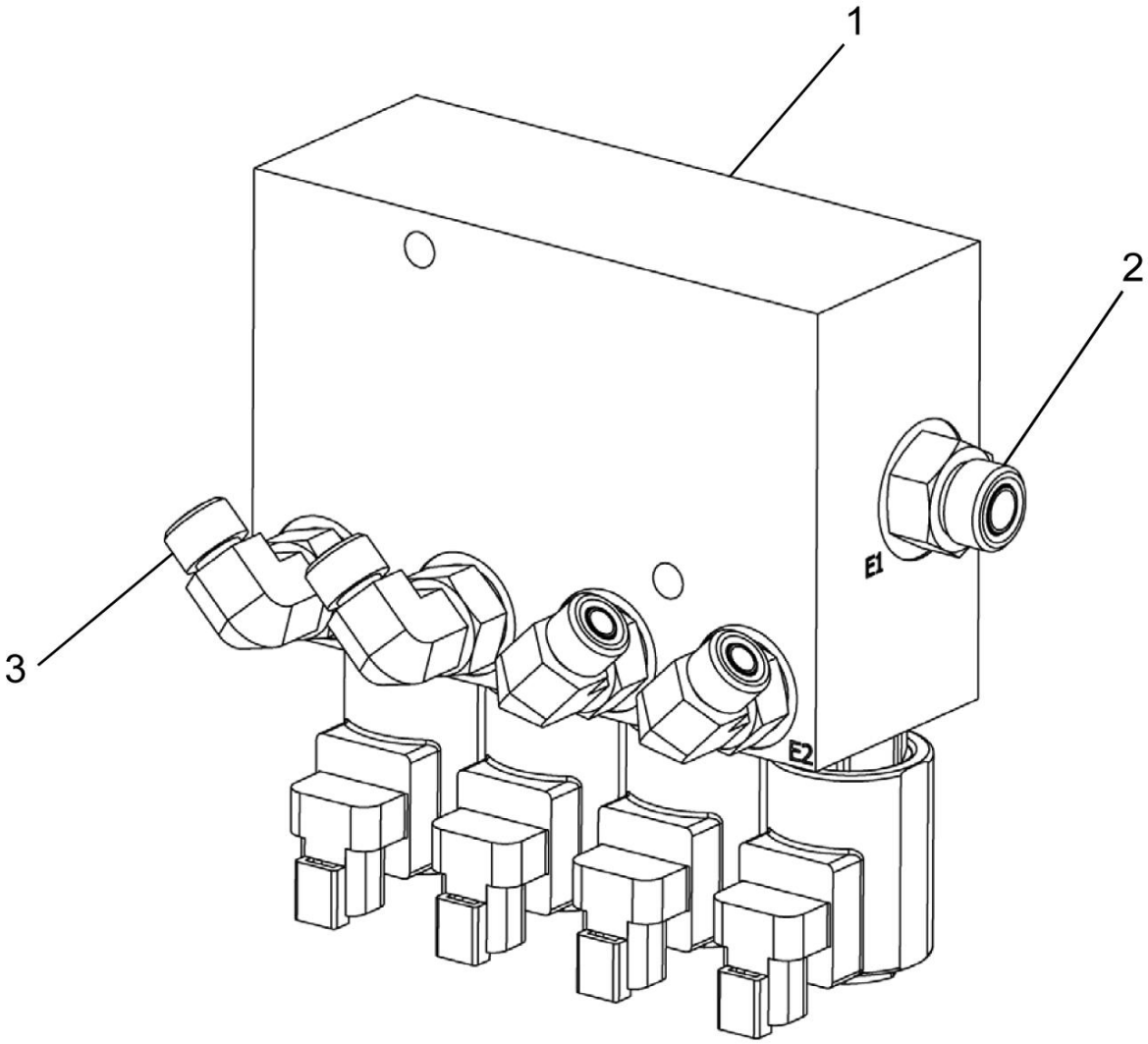

REF	PART NO.	DESCRIPTION	QTY
	500-01850 (Rev. A)	*Assembly, AUX. Valve*	
1	**501-10144**	Valve, Auxiliary O/R 4F (see page 199)	1
2	513-50027	Adapter, MOFS-8/MORB-10	1
3	514-55020	Adapter, 90 DEG, ORFS to O-Ring	4

WHEN ORDERING PARTS, SPECIFY MODEL NUMBER, SERIAL NUMBER AND DESCRIPTION OF PARTS REQUIRED

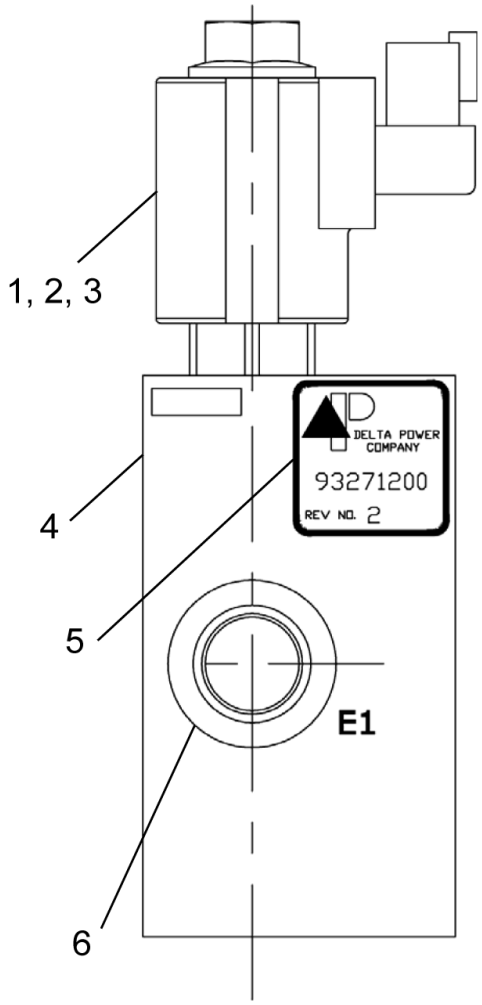

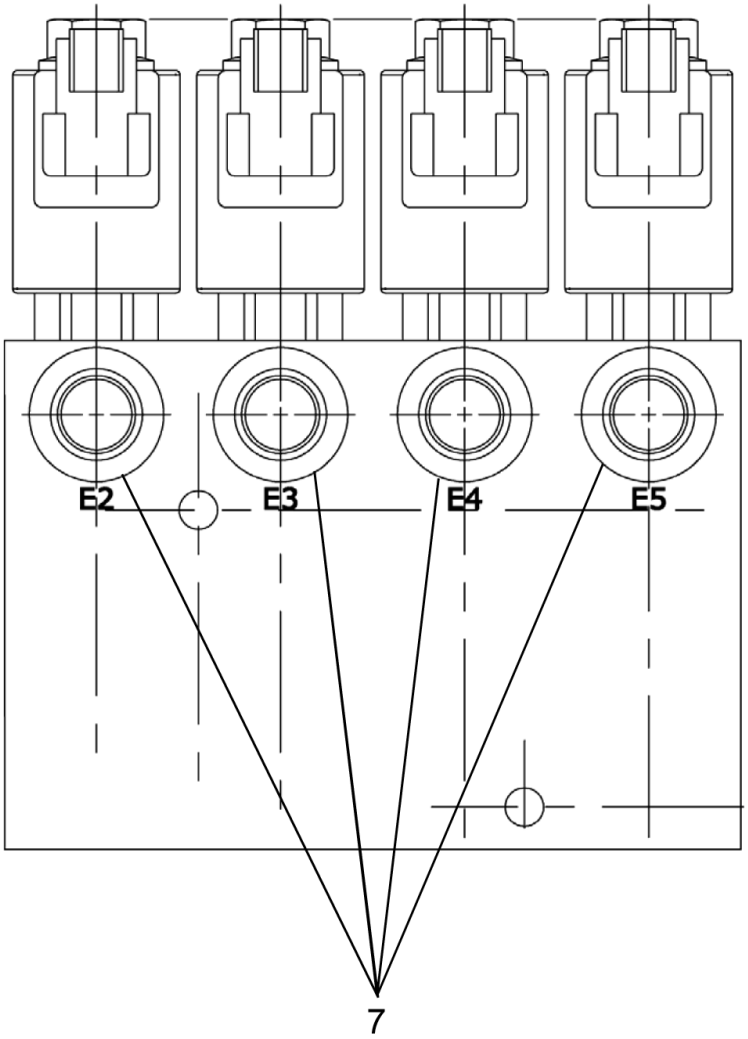

REF	PART NO.	DESCRIPTION	QTY
	501-10144 (Rev. 00)	*Valve, Auxiliary O/R 4F*	
1	225148	2W N.C. Spool Valve	4
2	222202	Oil, Cartridge valve	4
3	225149	Coil Nut	4
4	225150	Manifold	1
5	222909	Manifold Tag	1
6	223256	#10 SAE Plastic Plug	1
7	223257	#8 SAE Plastic Plug	4

WHEN ORDERING PARTS, SPECIFY MODEL NUMBER, SERIAL NUMBER AND DESCRIPTION OF PARTS REQUIRED

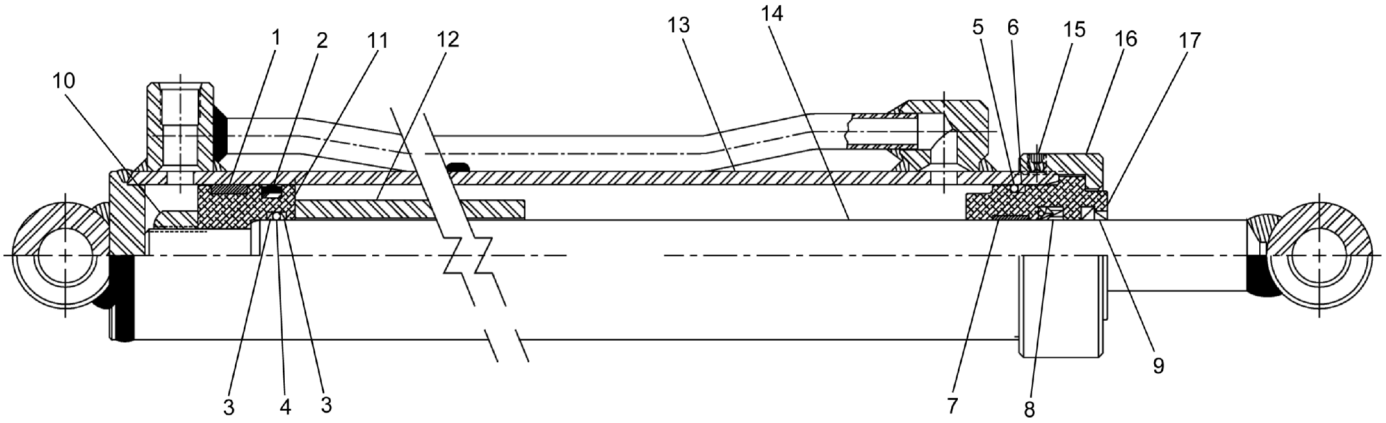

WHEN ORDERING PARTS, SPECIFY MODEL NUMBER, SERIAL NUMBER AND DESCRIPTION OF PARTS REQUIRED

REF	PART NO.	DESCRIPTION	QTY
	540-00061 (Rev. B)	*AUX Outrigger EXT Cylinder (Gray)*	
	221101	Seal Kit (Items 1 thru 9)	1
1	221102	Wear Ring	1
2	221103	PSP Seal	1
3	221104	Back-up Ring	2
4	221105	O' Ring	1
5	221106	O' Ring	1
6	221107	Back-Up Ring	1
7	221108	Wear Ring	1
8	221109	Loaded U-Cup	1
9	221110	Rod Wiper	1
10	221111	Locknut	1
11	221112	Piston	1
12	221113	Spacer	1
13	221114	Barrel Assembly	1
14	221115	Rod Assembly	1
15	221116	Cup PT Set Screw	1
16	221117	Thread Cap	1
17	221118	Thread Cap Head	1

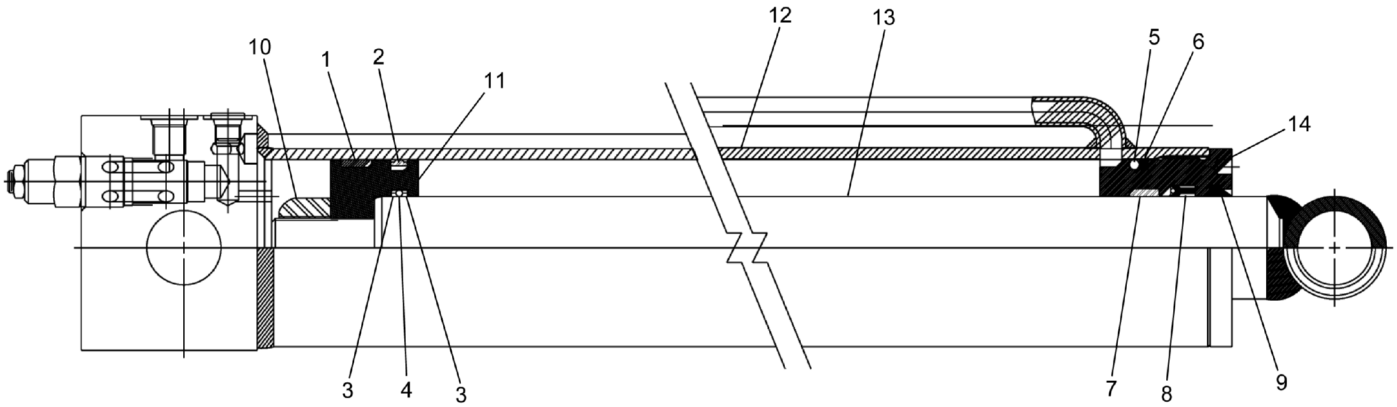

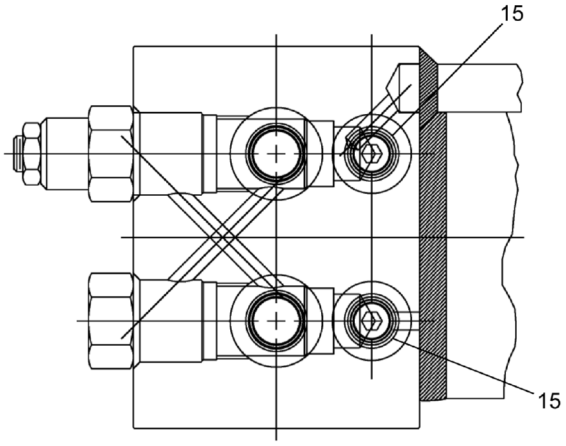

WHEN ORDERING PARTS, SPECIFY MODEL NUMBER, SERIAL NUMBER AND DESCRIPTION OF PARTS REQUIRED

LOAD KING BY CUSTOM TRUCK 1 SOURCE	**AUXILIARY OUTRIGGER CYLINDER VERTICAL (GRAY)**	DATE: Revised 01-2013	**CHAPTER**
		MODEL: 28-106	**2**
		PAGE: 202	

REF	PART NO.	DESCRIPTION	QTY
	540-30181 (Rev. A)	*AUX Vertical Outrigger Cylinder (Gray)*	
	221125	Seal Kit (Items 1 thru 9)	1
1	222999	Wear Ring	1
2	221119	PSP Seal	1
3	221107	Back-Up Ring	2
4	221106	O' Ring	1
5	223005	O' Ring	1
6	223006	Back-Up Ring	1
7	221102	Wear Ring	1
8	215123	Loaded U-Cup	1
9	215124	Rod Wiper	1
10	223010	Locknut	1
11	221120	Piston	1
12	223012	Barrel Assembly	1
13	221122	Rod Assembly	1
14	221123	Internal Head	1
15	221124	Steel Plug	2

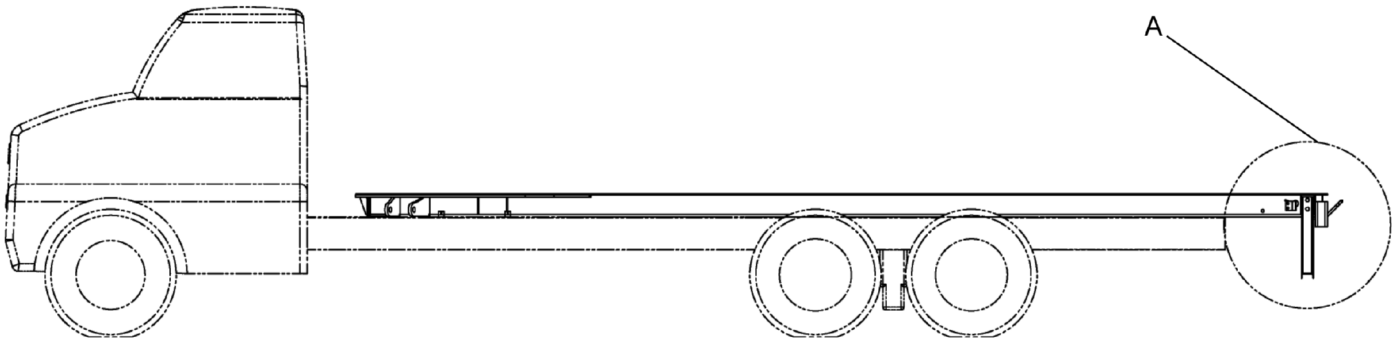

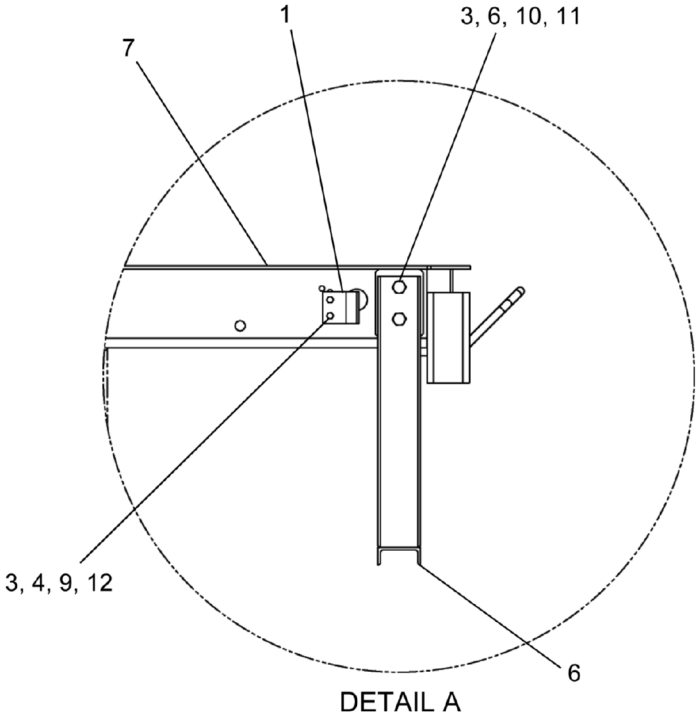

DETAIL A

REF	PART NO.	DESCRIPTION	QTY
	T119103 (Rev. C)	*Subframe Installation*	
1	789-05681	Bracket, Tail Light	2
2*	N04-375C000-25	Nut, HEX 0.375-16, ST Z GR5	4
3	N04-750C000-Y8	Nut, HEX 0.75-10, ST YZ GR8	4
4	SHF-375CA00-25	SCR, HHCS FT 0.375-16 X 1.00, ST Z G5	4
5*	SHF-750CB00-Y8	SCR, HHCS FT 0.75-10X2.00, STYZ G8	4
6	T105903	Bumper Weldment	1
7	T119111	Subframe Weldment	1
8*	**T125817**	Assembly Subframe ELEC (see page 206)	1
9	W07-375X000-20	WSH, LCK, MED SPLT 0.375, ST Z	4
10	W07-750X000-20	WSH, LCK, MED SPLT 0.75, ST Z	4
11	WAH-75NX000-Y2	WSH, FL HRD A-NRW 0.75, ST YZ	4
12	WAN-37NX000-20	WSH, FL TYPA-NRW 0.375, ST Z	4

* ITEM NOT SHOWN IN ILLUSTRATION

WHEN ORDERING PARTS, SPECIFY MODEL NUMBER, SERIAL NUMBER AND DESCRIPTION OF PARTS REQUIRED

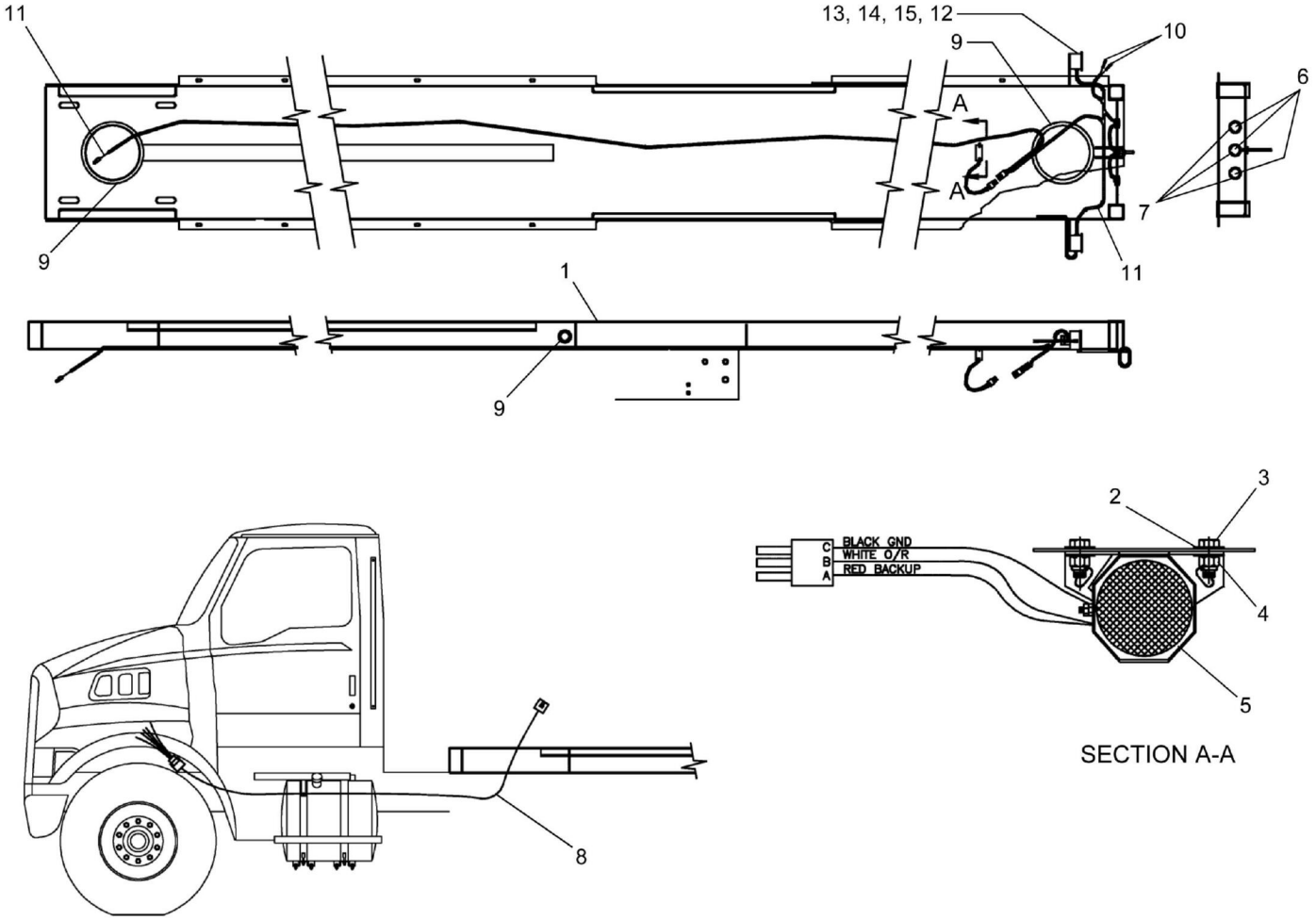

WHEN ORDERING PARTS, SPECIFY MODEL NUMBER, SERIAL NUMBER AND DESCRIPTION OF PARTS REQUIRED

REF	PART NO.	DESCRIPTION	QTY
	T125817 (Rev. B)	*Assembly Subframe ELEC*	
1	Boom Trucks	Subframe Weldment	Ref
2	SHF-250C750-25	SCR, HHCS, 0.25-20 X 0.75, ST SQC G5	2
3	WAN-250C750-20	Flatwasher 1/4	2
4	NYL-250C00-25	Locknut, 1/4-20 UNC PLT	2
5	714A1432	Horn ASSY, ECCO #DF532	1
6	400-09113	Light 2.5" Reflective	3
7	400-09318	Gromment Mount 2.5"	3
8	400-02463	Harness, Main	1
9	209-00174	Seal Trim	10FT
10	400-02230	Terminal-Butt Connection 16/14 GA	2
11	T137459	Harness, Tail Lights	1
12	N04-312C000-25	Nut, HEX 0.3125-18, ST SQC G5	4
13	S01-312CA25-25	HHCS, 5/16-18 NC X 1.25 GR5 Zinc	4
14	WAN-13NX000-20	Flatwasher 5/16 Zinc PLT	8
15	W07-312X000-20	WSH, LCK, MED SPLT 0.3125, ST SQC	4

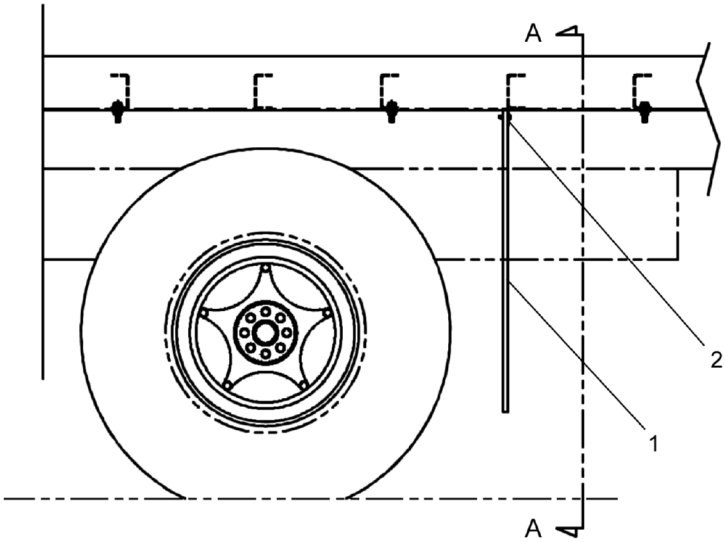

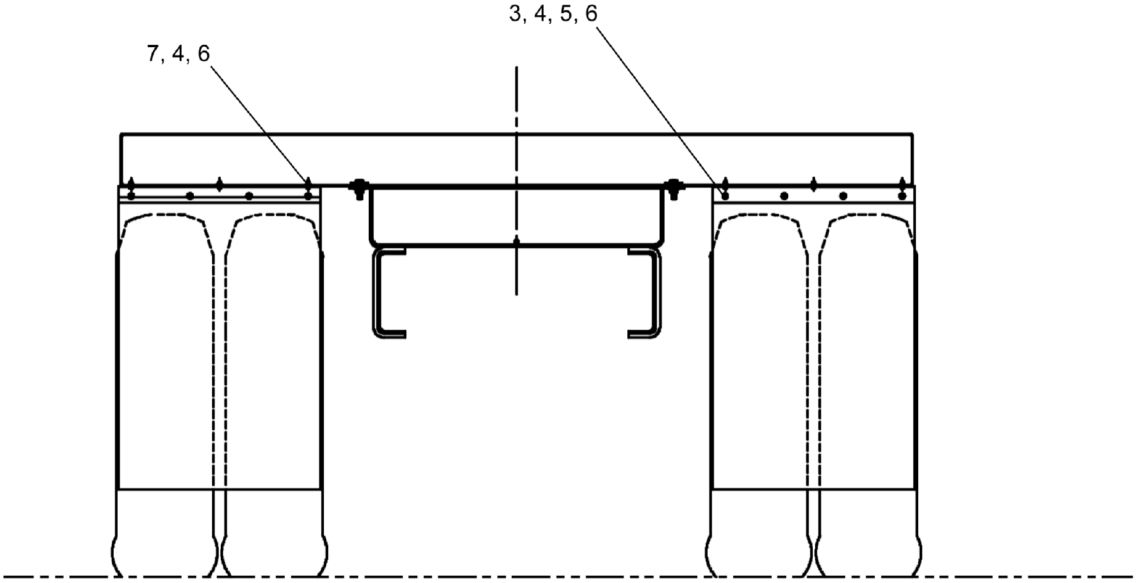

VIEW A-A

REF	PART NO.	DESCRIPTION	QTY
	T151475 (Rev. A)	*Brackets W/Mud Flaps*	
1	209-00461	Mud Flap, 1/2 X 24 X 36 Logo WHT	2
2	785-00561	Angle, Support Mud Flap	2
3	S01-250CA25-25	SCR, HHCS 0.25-20 X 1.25, ST X GR5	14
4	NYL-25C000-25	Nut, HEX NYL-INS 0.25-20, ST Z	14
5	WFD-250XA50-20	WSH, FNDR 0.25 X 1.50, ST SQC	8
6	WAN-25NX000-20	WSH, FL TYPA-NRW 0.25, ST Z	14
7	SHF-250C750-25	SCR, HHCS, 0.25-20 X 0.75, ST SQC G5	6

WHEN ORDERING PARTS, SPECIFY MODEL NUMBER, SERIAL NUMBER AND DESCRIPTION OF PARTS REQUIRED

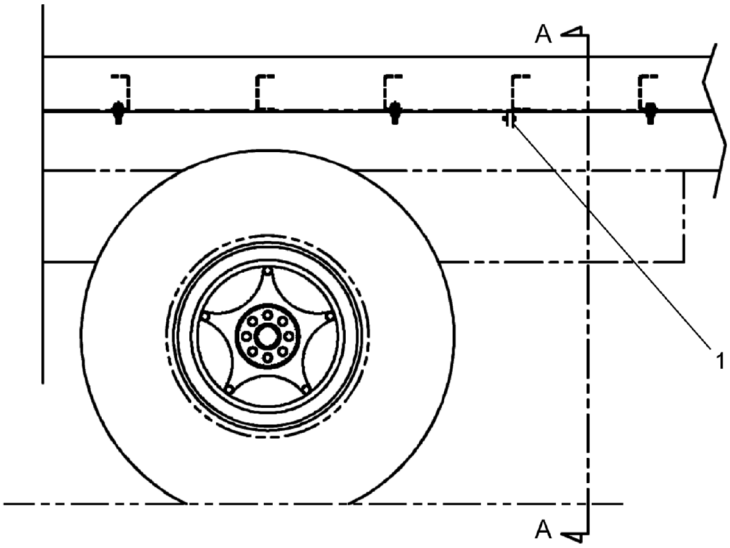

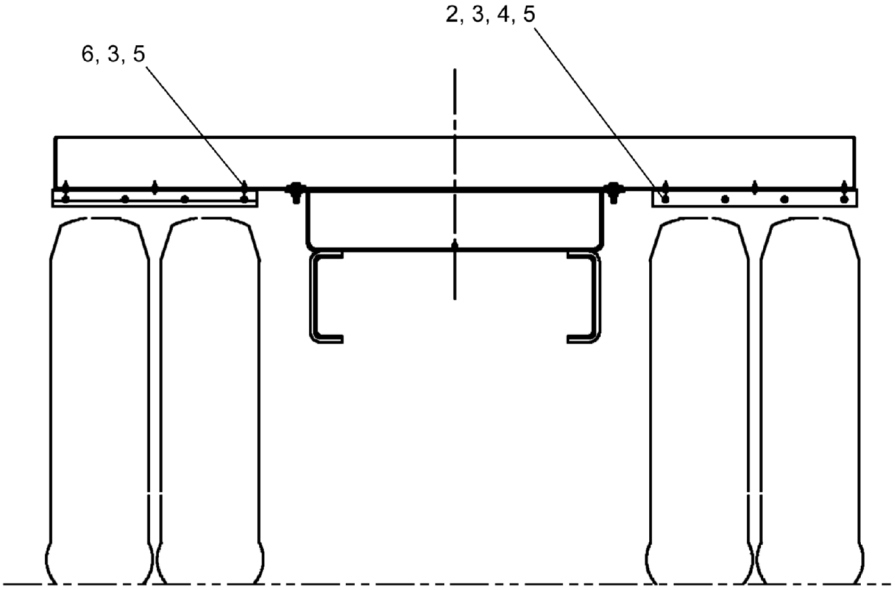

VIEW A-A

REF	PART NO.	DESCRIPTION	QTY
	T152436 (Rev. A)	*Brackets W/O Mud Flaps*	
1	785-00561	Angle, Support Mud Flap	2
2	S01-250CA25-25	SCR, HHCS 0.25-20 X 1.25, ST X GR5	14
3	NYL-25C000-25	Nut, HEX NYL-INS 0.25-20, ST Z	14
4	WFD-250XA50-20	WSH, FNDR 0.25 X 1.50, ST SQC	8
5	WAN-25NX000-20	WSH, FL TYPA-NRW 0.25, ST Z	14
6	SHF-250C750-25	SCR, HHCS, 0.25-20 X 0.75, ST SQC G5	6

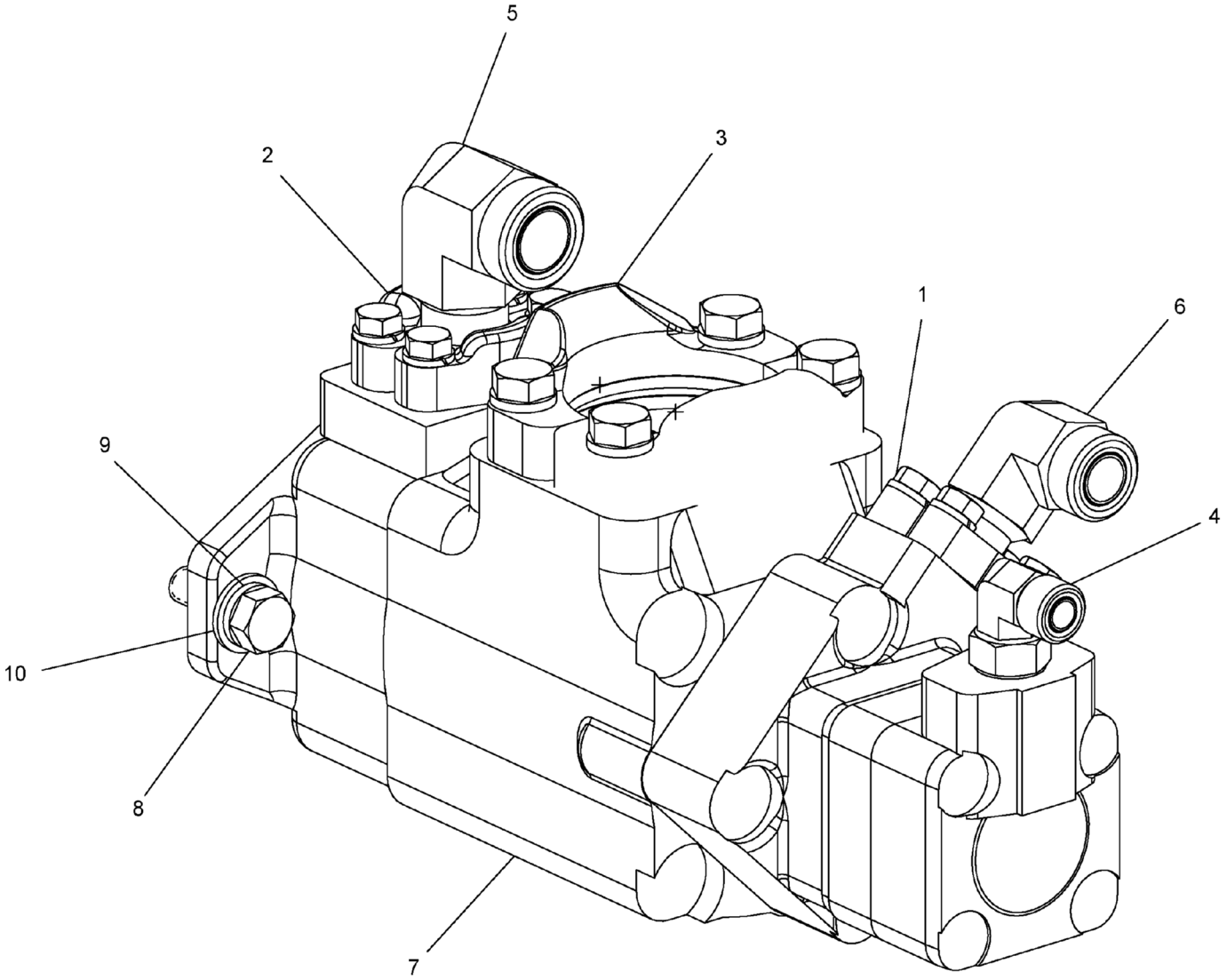

WHEN ORDERING PARTS, SPECIFY MODEL NUMBER, SERIAL NUMBER AND DESCRIPTION OF PARTS REQUIRED

REF	PART NO.	DESCRIPTION	QTY
	521-00084-6 (Rev. C)	*Auto Trans, +12" Hose*	
1	505-01002	Kit, Split Flange, C61-12 W/HDWR	1
2	505-02002	Split Flange Kit, 1.00 - Use 12019-751 W/HDWR	1
3	505-06004	Split Flange Kit, 2.50	1
4	514-55011	90° Elbow M#8 OFS X M#8 ORB	1
5	514-59031	Elbow, 90, MOFS-16/C61-16	1
6	514-67005	Fitting	1
7	**520-00053-4**	Pump, Triple Eaton #CCC-RH (see page 212)	1
8	S01-500CA50-Y8	SCR, HHCS 0.50 - 13 X 1.50, ST YZ GR8	2
9	W07-500X000-20	WSH, LCK, MED SPLT 0.50, ST Z	2
10	WAH-50NX000-Y2	WSH, FL HRD A-NRW 0.50, ST YZ	2

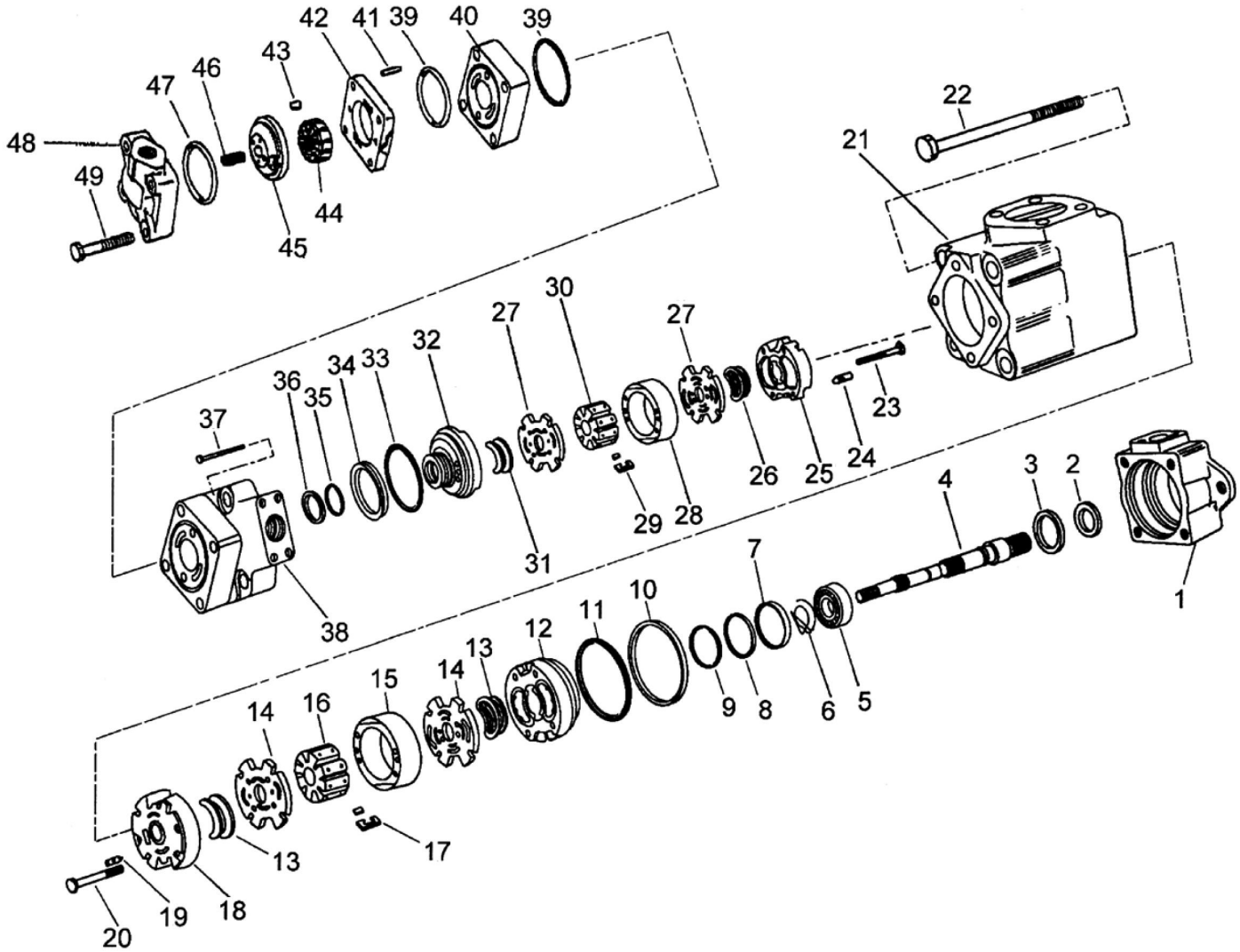

WHEN ORDERING PARTS, SPECIFY MODEL NUMBER, SERIAL NUMBER AND DESCRIPTION OF PARTS REQUIRED

REF	PART NO.	DESCRIPTION	QTY
	520-00053-4 (Rev. B)	*Pump, Triple Eaton #CCC-RH*	
1	935-00119	Back Up Ring	1
2	935-00101*	Primary Shaft Seal	1
3	935-00033	Washer	1
4	935-00097	Shaft (297 Type)	1
5	935-00020	Bearing	1
6	935-00025	Ring	1
7	935-00034	Lockring	1
8	935-00119	Back Up Ring	1
9	935-00026*	O-Ring	1
10	935-00151	Seal Ring	1
11	935-00030*	O-Ring	1
12	935-00150	Outlet Plate	1
13	935-00149	Seal Pac	4
14	935-00120	Flex Side Plate	2
15	935-00148	Ring	1
16	935-00044	Rotor	1
17	935-00056	Vane KiT	1
18	935-00146	Inlet Plate	1
19	935-00147	Pin	2
20	935-00145	Hex Head Screw	2
21	935-00041	Inlet Cover	1
22	935-00024	Bolt	4
23	935-00140	Screw	2
24	935-00141	Pin	2
25	935-00142	Inlet Plate	1
26	935-00143	Seal Pac	4
27	935-00121	Side Plate Kit	1
28	935-00139	Ring	1
29	935-00144	Vane Kit	1
30	935-00138	Rotor	1
31	935-00143	Seal Pac	4
32	935-00117	Outlet Plate	1
33	935-00028*	O-Ring	1
34	935-00136	Seal Ring	1
35	935-00060*	O-Ring	1
36	935-00122	Back-Up Ring	1
37	935-00022	Bolt	4
38	935-00135	Rear Mounting Cover	1
39	935-00093*	O-Ring	2
40	935-00111	Wear Plate	1
41	935-00095	Pin	2
42	935-00110	Ring	1
43	935-00109	Vane Kit	1
44	935-00108	Rotor	1
45	935-00107	Pressure Plate	1
46	935-00106	Spring	1
47	935-00093*	O-Ring	1
48	935-00100	V10 Cover Option	1
49	935-00088	Bolt	1

* 935-00091 REQUIRED FOR REPLACEMENT

WHEN ORDERING PARTS, SPECIFY MODEL NUMBER, SERIAL NUMBER AND DESCRIPTION OF PARTS REQUIRED

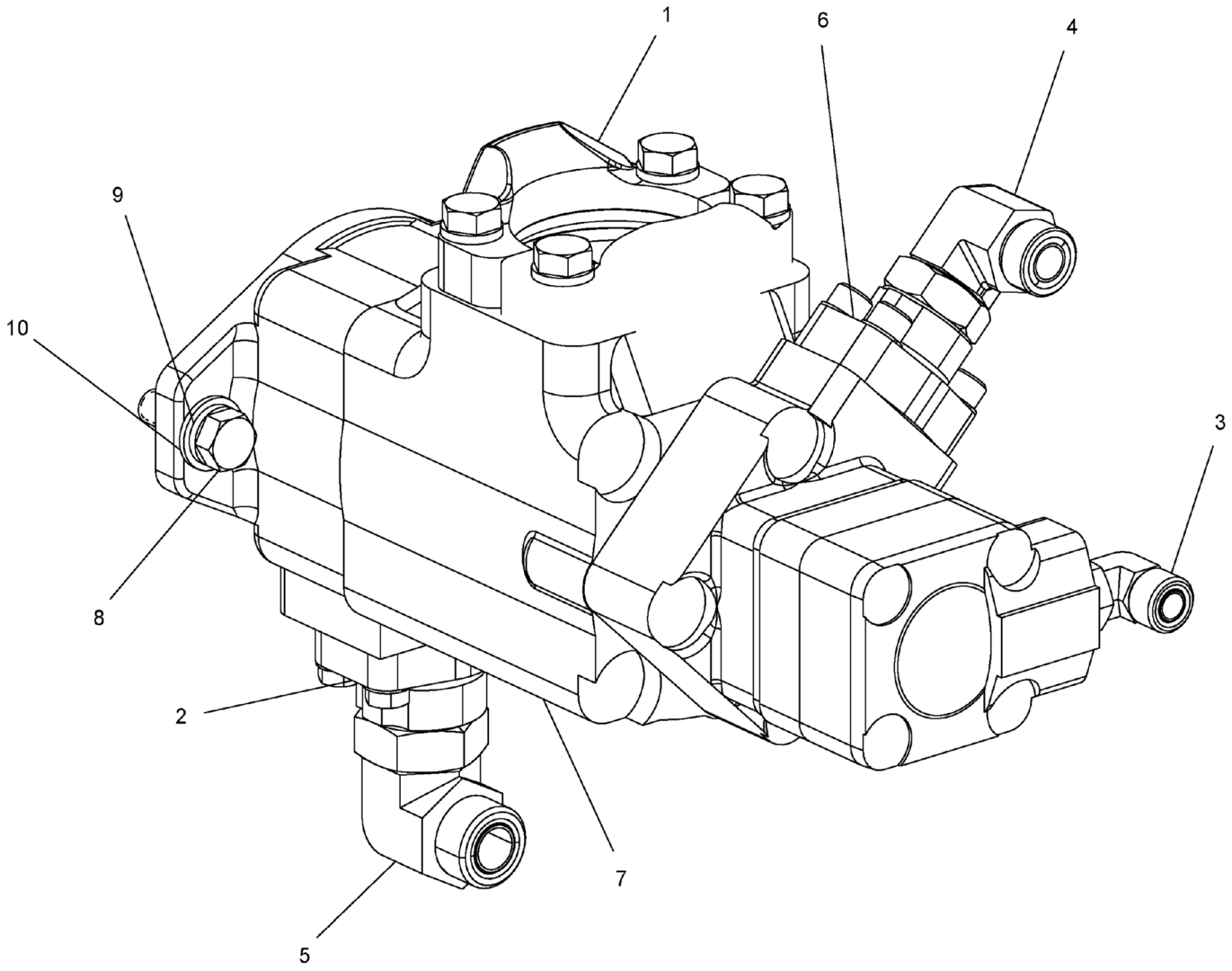
1
6
4
9
10
3
8
2
7
5

REF	PART NO.	DESCRIPTION	QTY
	521-00084-7 (Rev. B)	*Manual 8 Bolt PTO, +12" Hose*	
1	505-06004	Split Flange Kit, 2.50	1
2	**513-90064**	Flange Kit STR - 16SF F-16 ORB W/HDWR (see page 216)	1
3	514-55011	90° Elbow M#8 OFS X M#8 ORB	1
4	514-56004	90 Elbow M#10 OFS X M12 ORB	1
5	514-59023	Elbow 90 DEG, MOFS - 12 / MORB -16	1
6	519-90067	Adapter, FLG - 12SAE X -12 ORB W/HDWR	1
7	**520-00053-3**	Pump, Triple, Eaton #ACD-LH (see page 217)	1
8	S01-500CA50-Y8	SCR, HHCS 0.50 - 13 X 1.50, ST YZ GR8	2
9	W07-500X000-20	WSH, LCK, MED SPLT 0.50, ST Z	2
10	WAH-50NX000-Y2	WSH, FL HRD A-NRW 0.50, ST YZ	2

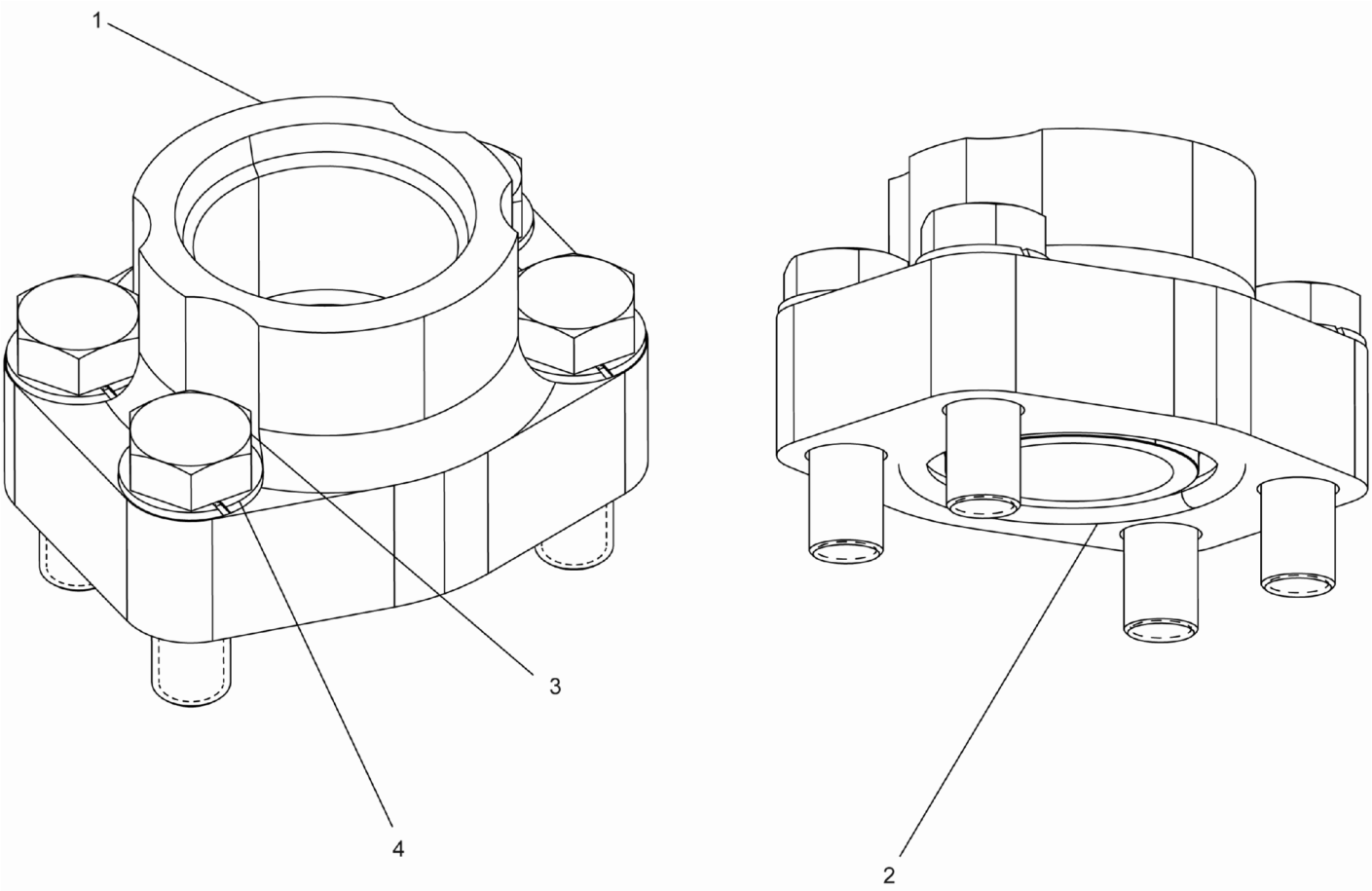

REF	PART NO.	DESCRIPTION	QTY
	513-90064 (Rev. C)	*Flange Kit STR - 16SF F-16 ORB W/HDWR*	
1	513-90064-001	Adapter, MORB-16/C91-16	1
2	1218-103	O-Ring, SAE C61/62-16	1
3	SHF-375CA25-25	SCR, HHCS FT 0.375-16X1.25, ST SQC G5	4
4	W07-375X000-20	WSH, LCK, MED SPLT 0.375, ST Z	4

WHEN ORDERING PARTS, SPECIFY MODEL NUMBER, SERIAL NUMBER AND DESCRIPTION OF PARTS REQUIRED

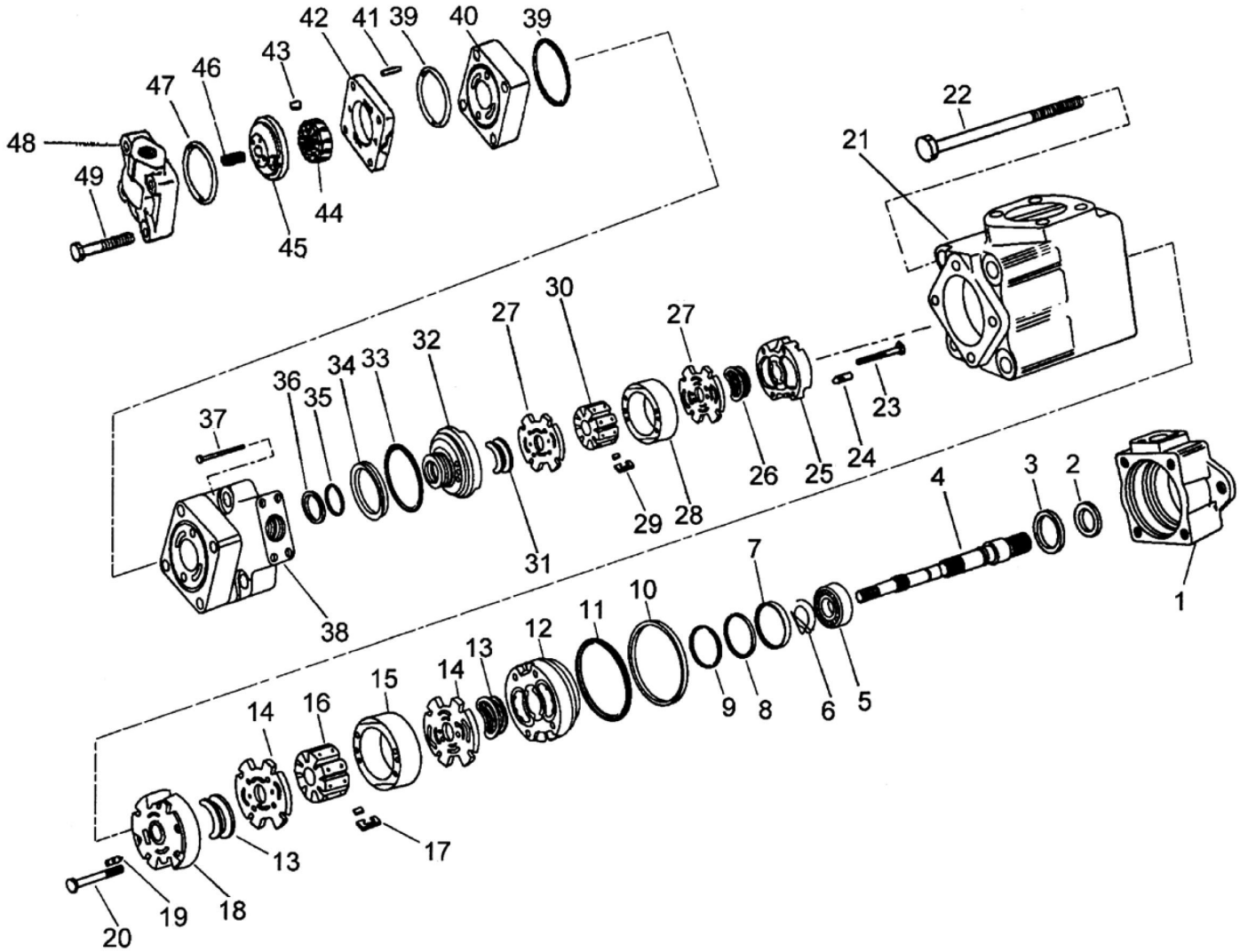

WHEN ORDERING PARTS, SPECIFY MODEL NUMBER, SERIAL NUMBER AND DESCRIPTION OF PARTS REQUIRED

LOAD KING BY CUSTOM TRUCK 1 SOURCE	**HYDRAULIC PUMP ASSEMBLY (VICKERS)**	DATE: Revised 01-2013	**CHAPTER**
		MODEL: 28-106	**2**
		PAGE: 217	

REF	PART NO.	DESCRIPTION	QTY
	520-00053-3 (Rev. B)	*Pump, Triple, Eaton #ACD-LH*	
1	935-00119	Back Up Ring	1
2	935-00101*	Primary Shaft Seal	1
3	935-00033	Washer	1
4	935-00097	Shaft (297 Type)	1
5	935-00020	Bearing	1
6	935-00025	Ring	1
7	935-00034	Lockring	1
8	935-00119	Back Up Ring	1
9	935-00026*	O-Ring	1
10	935-00151	Seal Ring	1
11	935-00030*	O-Ring	1
12	935-00150	Outlet Plate	1
13	935-00149	Seal Pac	4
14	935-00120	Flex Side Plate	2
15	935-00148	Ring	1
16	935-00044	Rotor	1
17	935-00056	Vane KiT	1
18	935-00146	Inlet Plate	1
19	935-00147	Pin	2
20	935-00145	Hex Head Screw	2
21	935-00041	Inlet Cover	1
22	935-00024	Bolt	4
23	935-00140	Screw	2
24	935-00141	Pin	2
25	935-00142	Inlet Plate	1
26	935-00143	Seal Pac	4
27	935-00121	Side Plate Kit	1
28	935-00139	Ring	1
29	935-00144	Vane Kit	1
30	935-00138	Rotor	1
31	935-00143	Seal Pac	4
32	935-00117	Outlet Plate	1
33	935-00028*	O-Ring	1
34	935-00136	Seal Ring	1
35	935-00060*	O-Ring	1
36	935-00122	Back-Up Ring	1
37	935-00022	Bolt	4
38	935-00135	Rear Mounting Cover	1
39	935-00093*	O-Ring	2
40	935-00111	Wear Plate	1
41	935-00095	Pin	2
42	935-00110	Ring	1
43	935-00109	Vane Kit	1
44	935-00108	Rotor	1
45	935-00107	Pressure Plate	1
46	935-00106	Spring	1
47	935-00093*	O-Ring	1
48	935-00100	V10 Cover Option	1
49	935-00088	Bolt	1

* 935-00091 REQUIRED FOR REPLACEMENT

WHEN ORDERING PARTS, SPECIFY MODEL NUMBER, SERIAL NUMBER AND DESCRIPTION OF PARTS REQUIRED

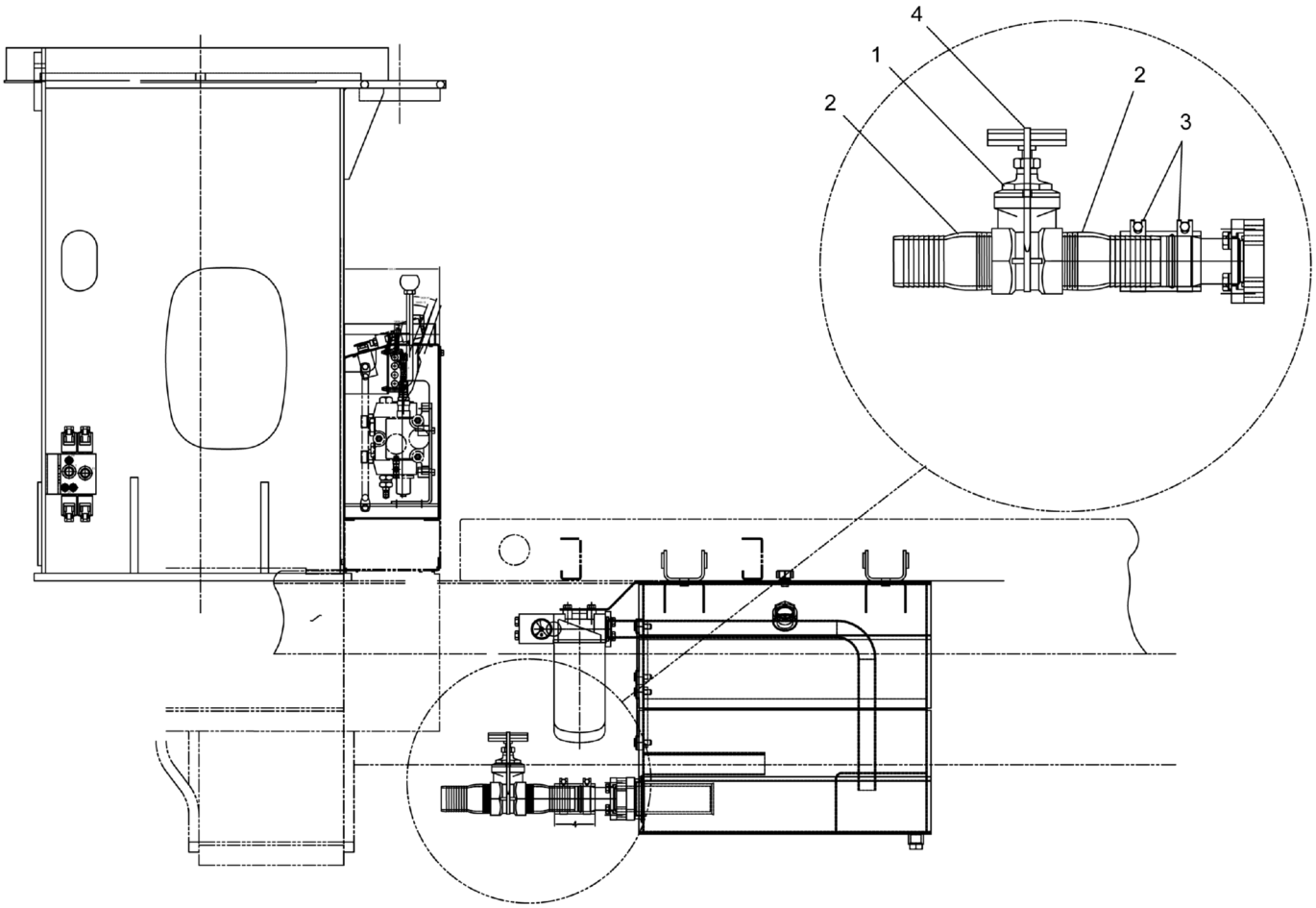

REF	PART NO.	DESCRIPTION	QTY
	T130215 (Rev. B)	*Hydraulic Tank Shut Off Valve INSTL*	
1	570-90055	2.5" Gate Valve	1
2	504-00902	2.5" Hose Coupling	2
3	1240-101	Clamp RG RAY 700-44 Zinc	2
4	400-15187	Cable Tie 24" Heavy BLK Nylon	1

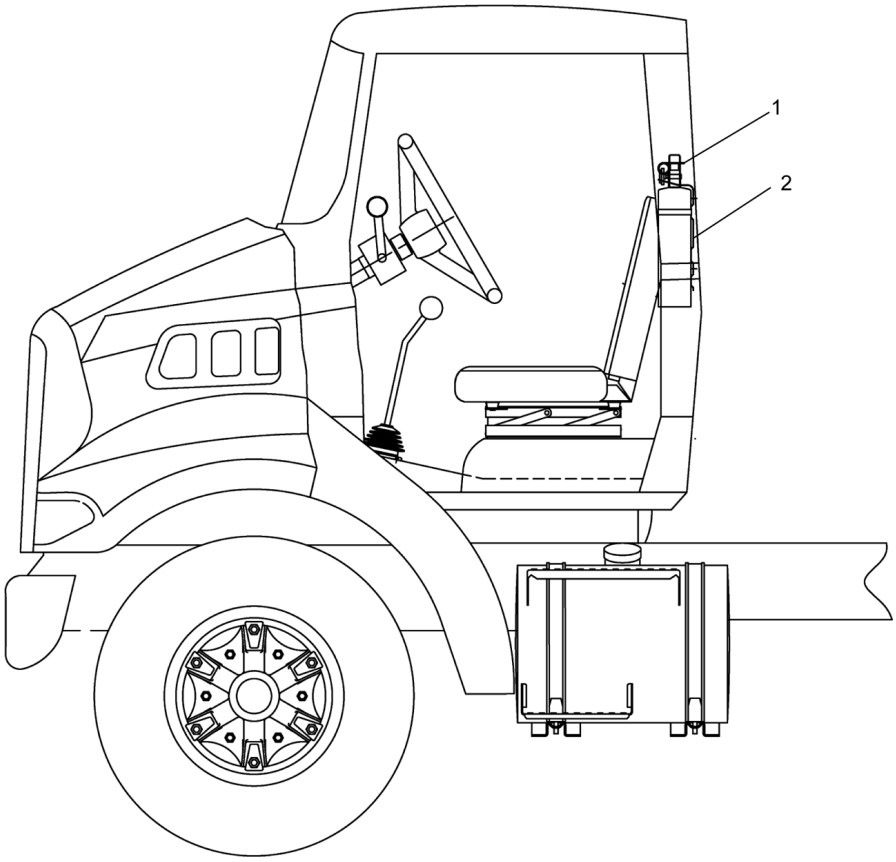

REF	PART NO.	DESCRIPTION	QTY
	736-00001-1 (Rev. B)	*Fire Extinguisher Installation*	
1	1222-217	Fire Extinguisher	1
2	SHS-190XA25-20	SHS-Screw, HEX Self - Drilling (ENG)	4

WHEN ORDERING PARTS, SPECIFY MODEL NUMBER, SERIAL NUMBER AND DESCRIPTION OF PARTS REQUIRED

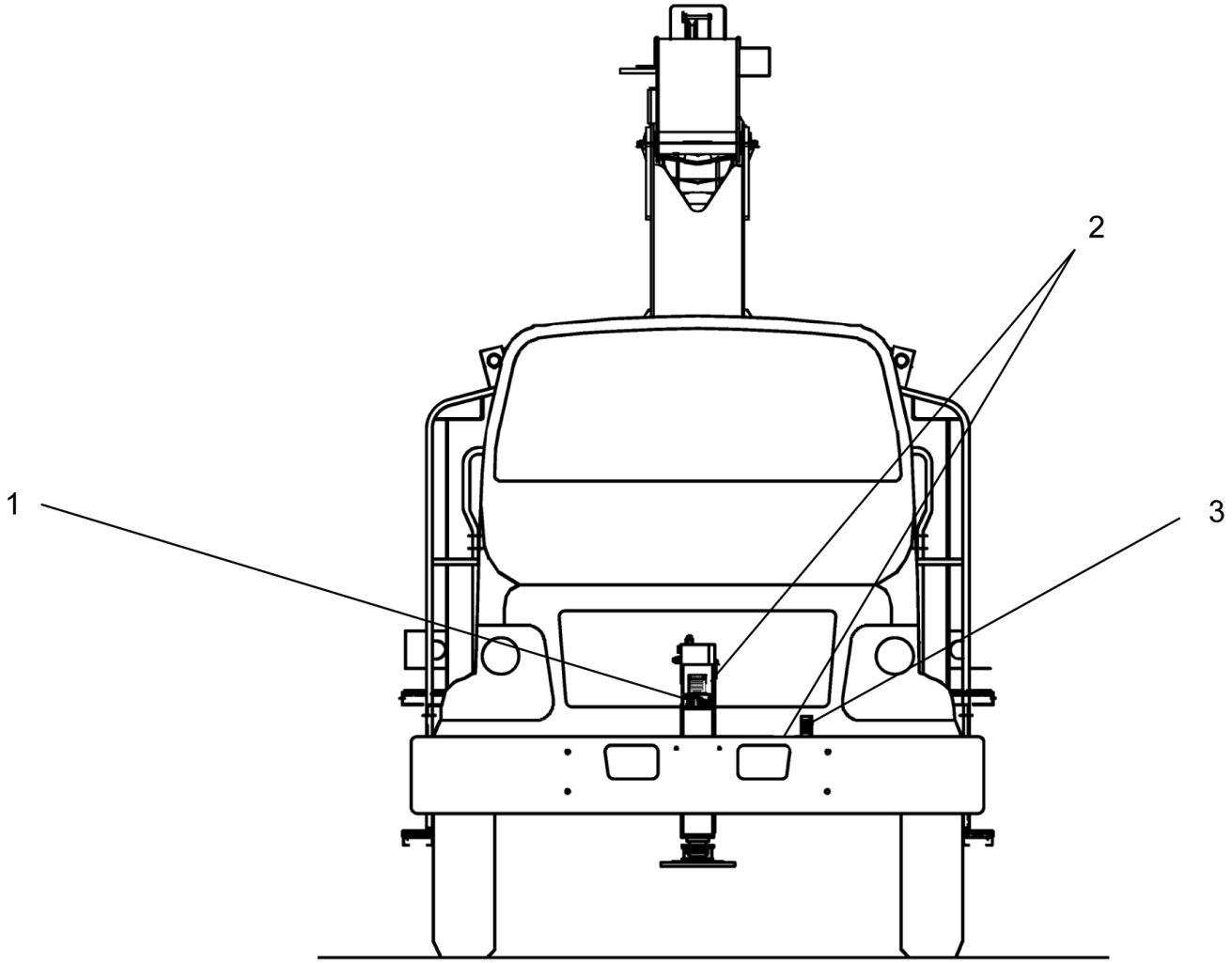

FIFTH OUTRIGGER FRONT JACK

DECAL LOCATIONS

REF	PART NO.	DESCRIPTION	QTY
	T117808-02 (Rev. C)	*Fifth Outrigger Jack*	
1	651-00414	Decal-Fifth O/R Crushing	1
2	651-00435	Decal-Fifth Outrigger	2
3	651-00464	Decal-Front O/R Switch	1

WHEN ORDERING PARTS, SPECIFY MODEL NUMBER, SERIAL NUMBER AND DESCRIPTION OF PARTS REQUIRED

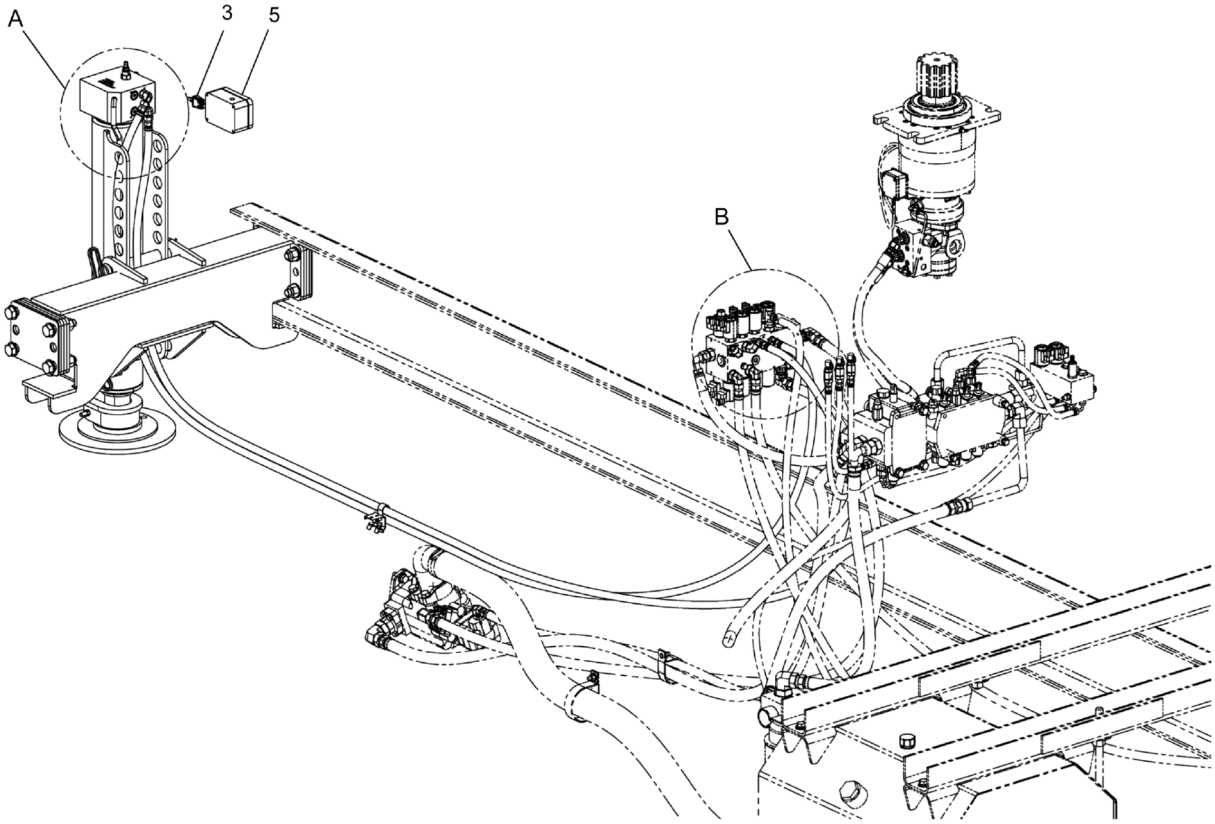

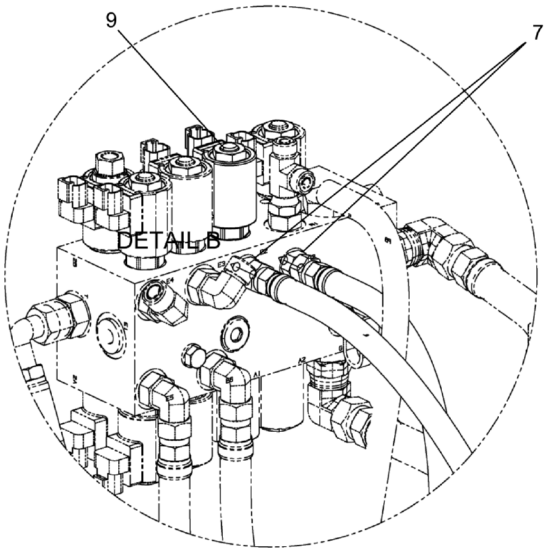

DETAIL B

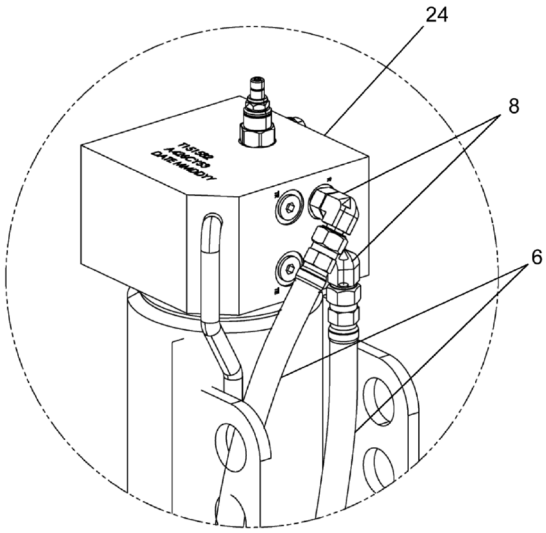

DETAIL A

WHEN ORDERING PARTS, SPECIFY MODEL NUMBER, SERIAL NUMBER AND DESCRIPTION OF PARTS REQUIRED

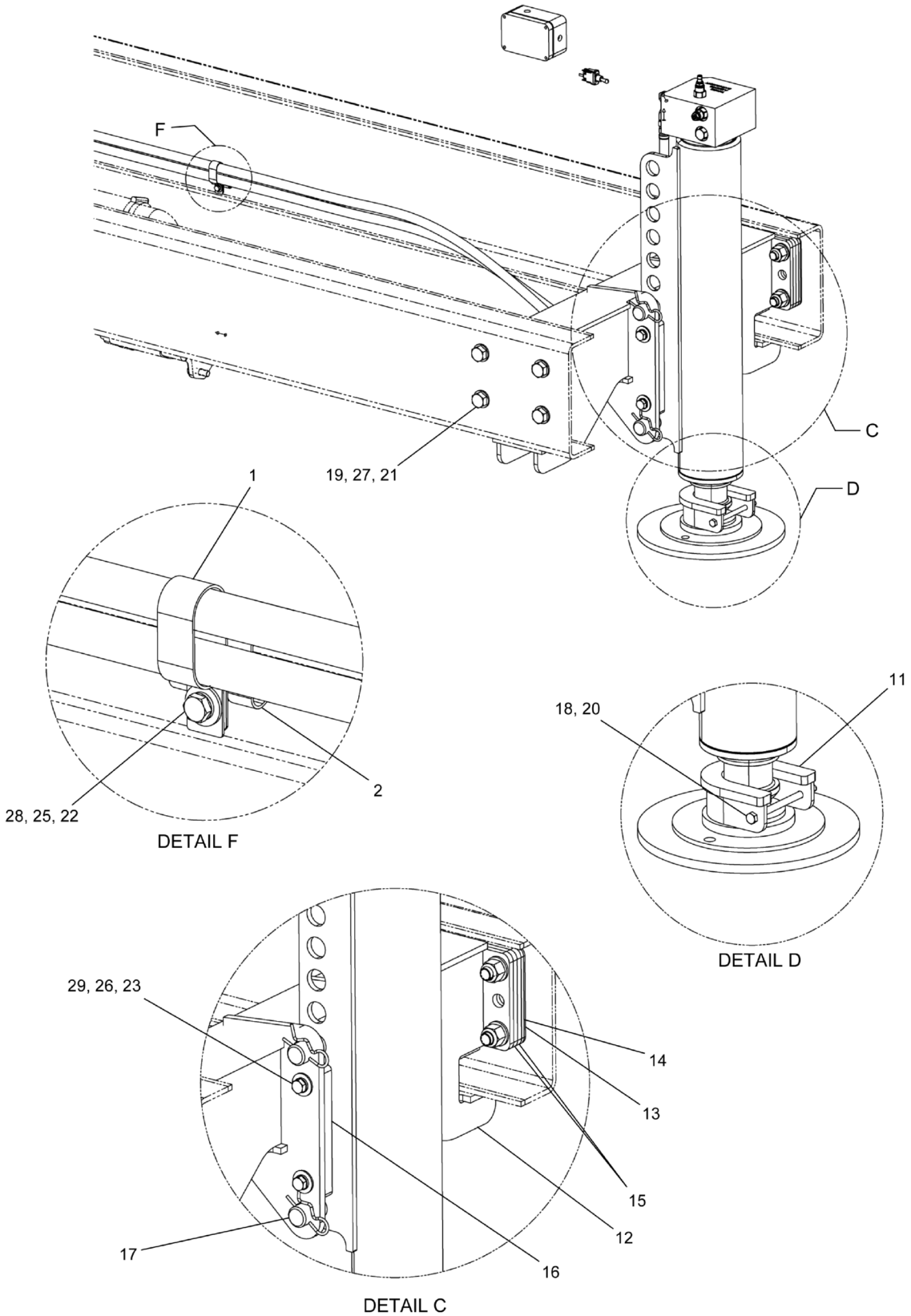

WHEN ORDERING PARTS, SPECIFY MODEL NUMBER, SERIAL NUMBER AND DESCRIPTION OF PARTS REQUIRED

REF	PART NO.	DESCRIPTION	QTY
	765-00059-1 (Rev. F)	*INSTL, 34.00 Front Jack*	
1	200B2007-67	Clamp, Double, MED, 0.88 ID	1
2	209-00879	Frame Clip Caddy, DBLE	1
3	400-04122	AUX O/R Switch	1
4*	400-25201	Harness, Front Jack	1
5	402-00049	Toggle Switch Enclosure	1
6	502-21018	Hose, Front Outrigger	2
7	513-40014	Adapter, MOFS-6/MORB-6	2
8	514-54004	Elbow, 90, MORB-6/MOFS-6	2
9	**559-00263**	Valve, Outrigger (see page 225)	1
10*	655-00013	Optional Decal Location	1
11	717F0362	Pad, Frt Jack	1
12	760-00462	FRT BMPR MTG BRKT	1
13	789-06043	Plate 7.75 X 6.00 X 0.125	2
14	789-06044	Plate 7.75 X 6.00 X 0.250	2
15	789-06045	Plate 7.75 X 6.00 X 0.375	4
16	789-06084	FRT BMPR MTG BRKT Spacer	2
17	870-30234	Front Jack Pin	2
18	N04-375C000-25	Nut, HEX 0.375-16, ST Z GR5	1
19	NYL-750C000-Y8	Nut, HEX NYL-INS 0.75-10, ST YZ G8	8
20	S01-375CE50-25	SCR, HHCS 0.375-16X5.50, ST Z GR5	1
21	S01-750CC25-Y8	SCR, HHCS 0.75-10X3.25, ST YZ GR8	8
22	SHF-250C750-25	SCR, HHCS, 0.25-20 X 0.75, ST SQC G5	1
23	SHF-500CA25-25	SCR, HHCS FT 0.50-13 X 1.25, ST Z G5	4
24	T151582	Front Bumper Outrigger	1
25	W07-250X000-20	Washer, LCK, MED SPLT 0.25, ST SQC	1
26	W07-500X000-20	WSH, LCK, MED SPLT 0.50, ST Z	4
27	WAH-75NX000-Y2	WSH, FL HRD A-NRW 0.75, ST YZ	16
28	WBR-25RX734-20	Washer, FL TYPB-REG 0.25, ST SQC	1
29	WBR-50RXA37-20	WSH, FL TYPB-REG 0.50, ST Z	4
30*	**655-00013-2**	Fifth Outrigger Jack (see page 226)	1

* ITEM NOT SHOWN IN ILLUSTRATION

WHEN ORDERING PARTS, SPECIFY MODEL NUMBER, SERIAL NUMBER AND DESCRIPTION OF PARTS REQUIRED

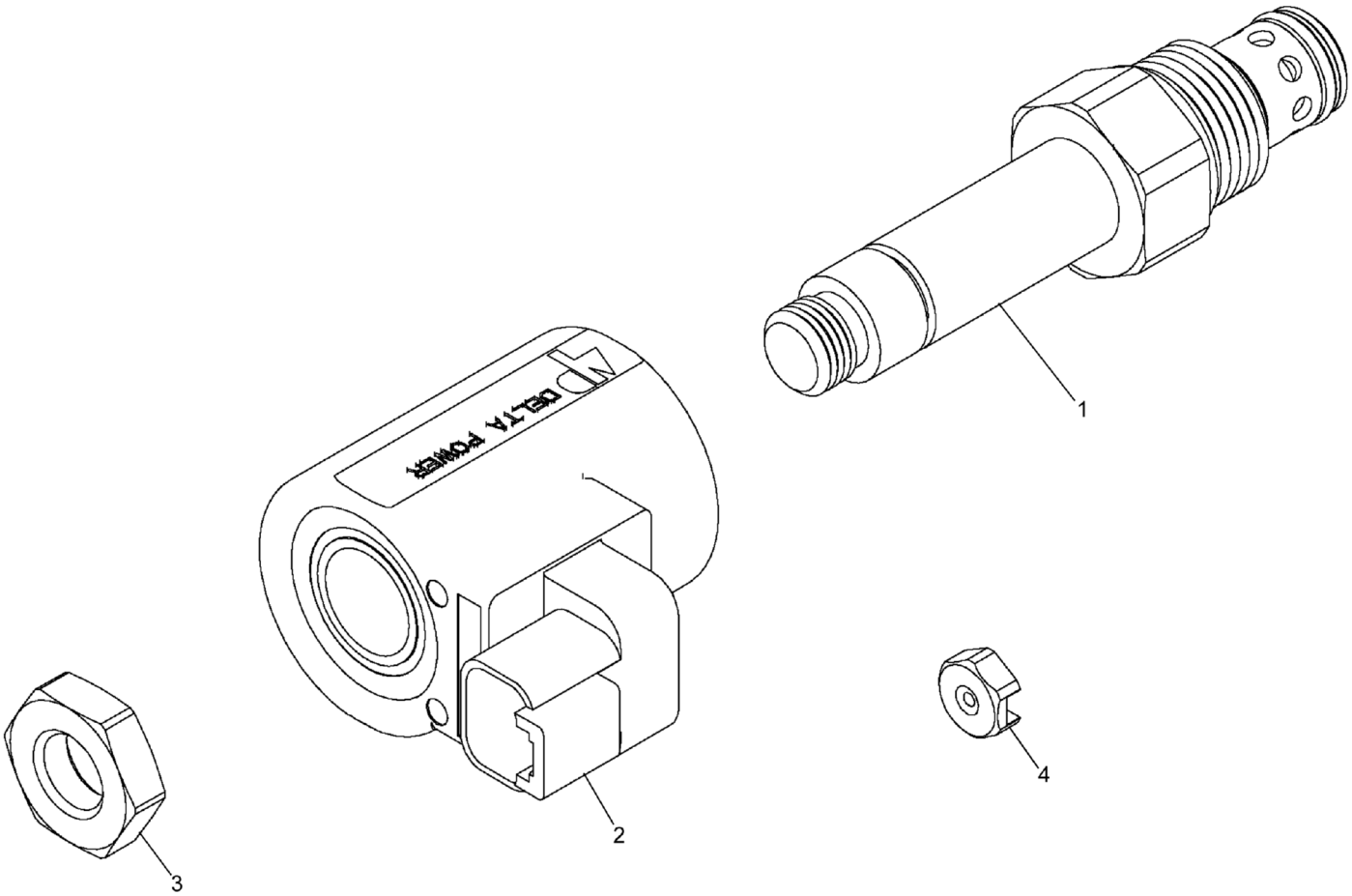

REF	PART NO.	DESCRIPTION	QTY
	559-00263 (Rev. 00)	*Valve, Outrigger*	
1	222201	Cartridge Valve	1
2	222202	Oil, Cartridge valve	1
3	221-04002	HEX Nut 1/2 UNC-2B Jam PLTD	1
4	552-00153	Orifice, Plate 0.082	1

WHEN ORDERING PARTS, SPECIFY MODEL NUMBER, SERIAL NUMBER AND DESCRIPTION OF PARTS REQUIRED

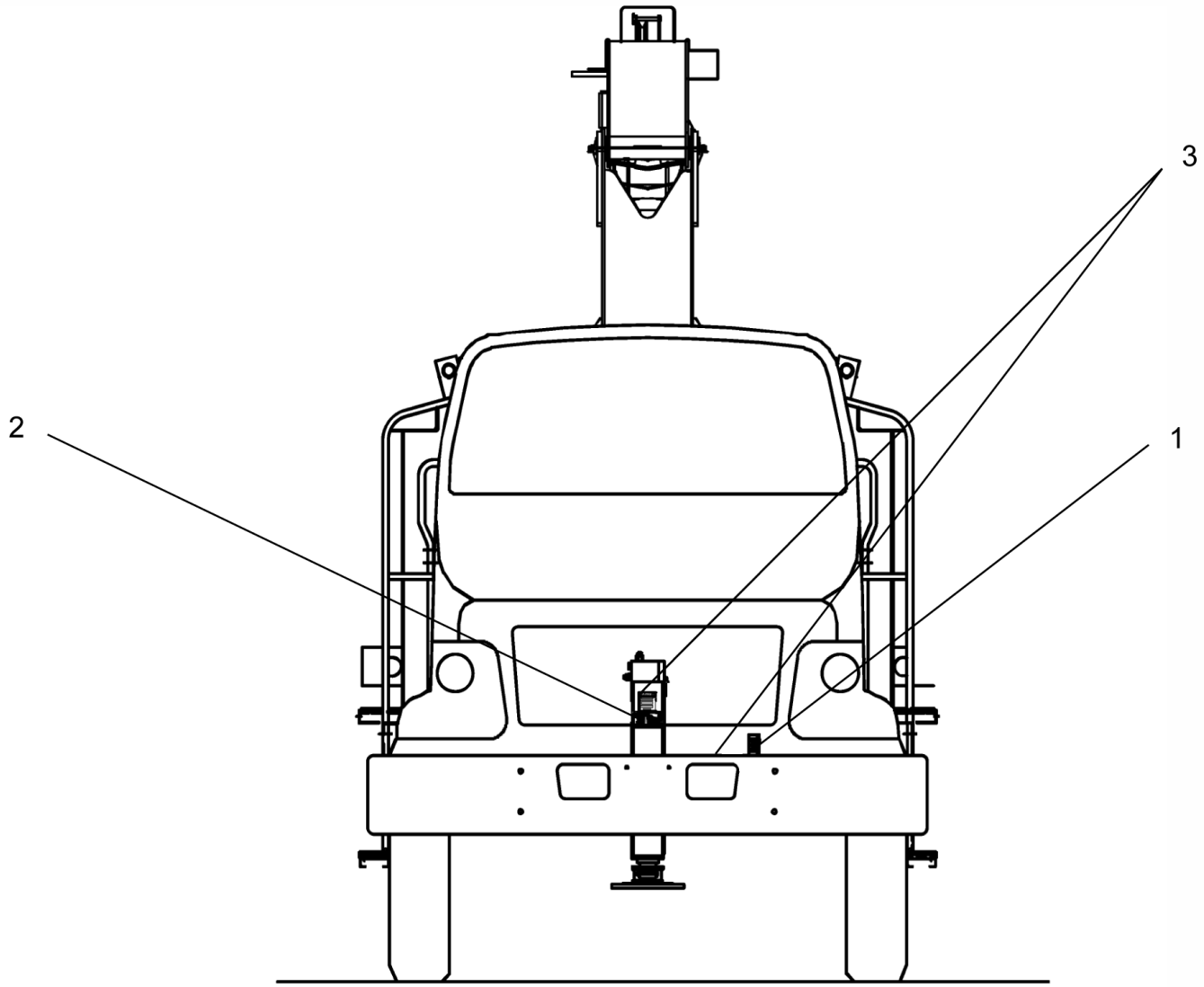

FIFTH OUTRIGGER FRONT JACK

DECAL LOCATIONS

REF	PART NO.	DESCRIPTION	QTY
	655-00013-2 (Rev. B)	*Fifth Outrigger Jack*	
1	651-00464	Decal-Front O/R Switch	1
2	651-00414	Decal-Fifth O/R Crushing	1
3	651-00435	Decal-Fifth Outrigger	2

WHEN ORDERING PARTS, SPECIFY MODEL NUMBER, SERIAL NUMBER AND DESCRIPTION OF PARTS REQUIRED

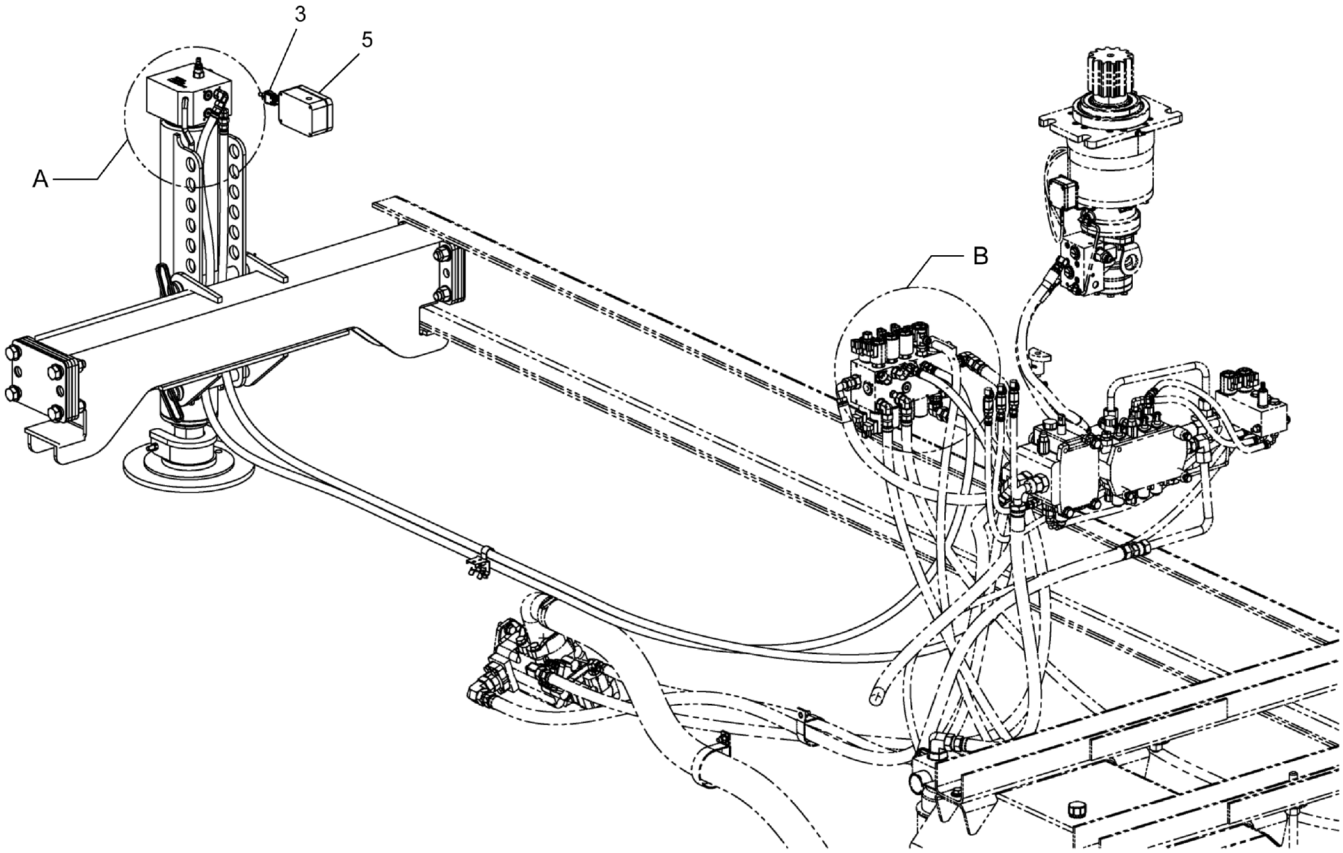

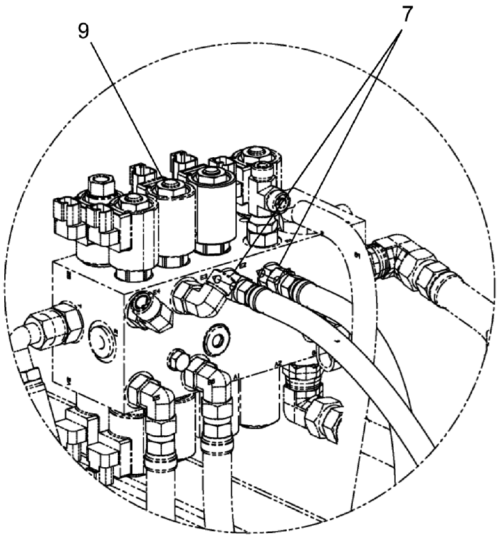

DETAIL B

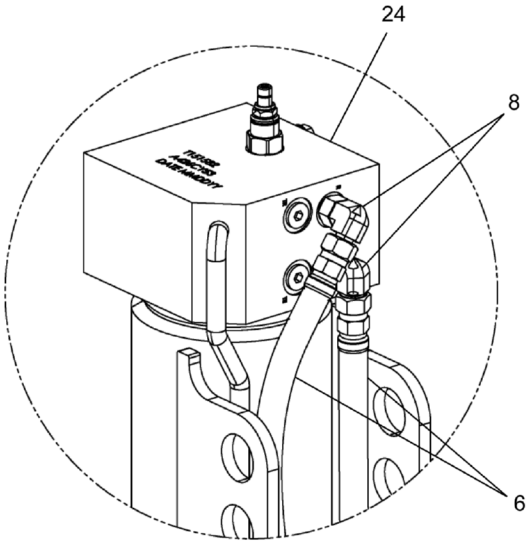

DETAIL A

WHEN ORDERING PARTS, SPECIFY MODEL NUMBER, SERIAL NUMBER AND DESCRIPTION OF PARTS REQUIRED

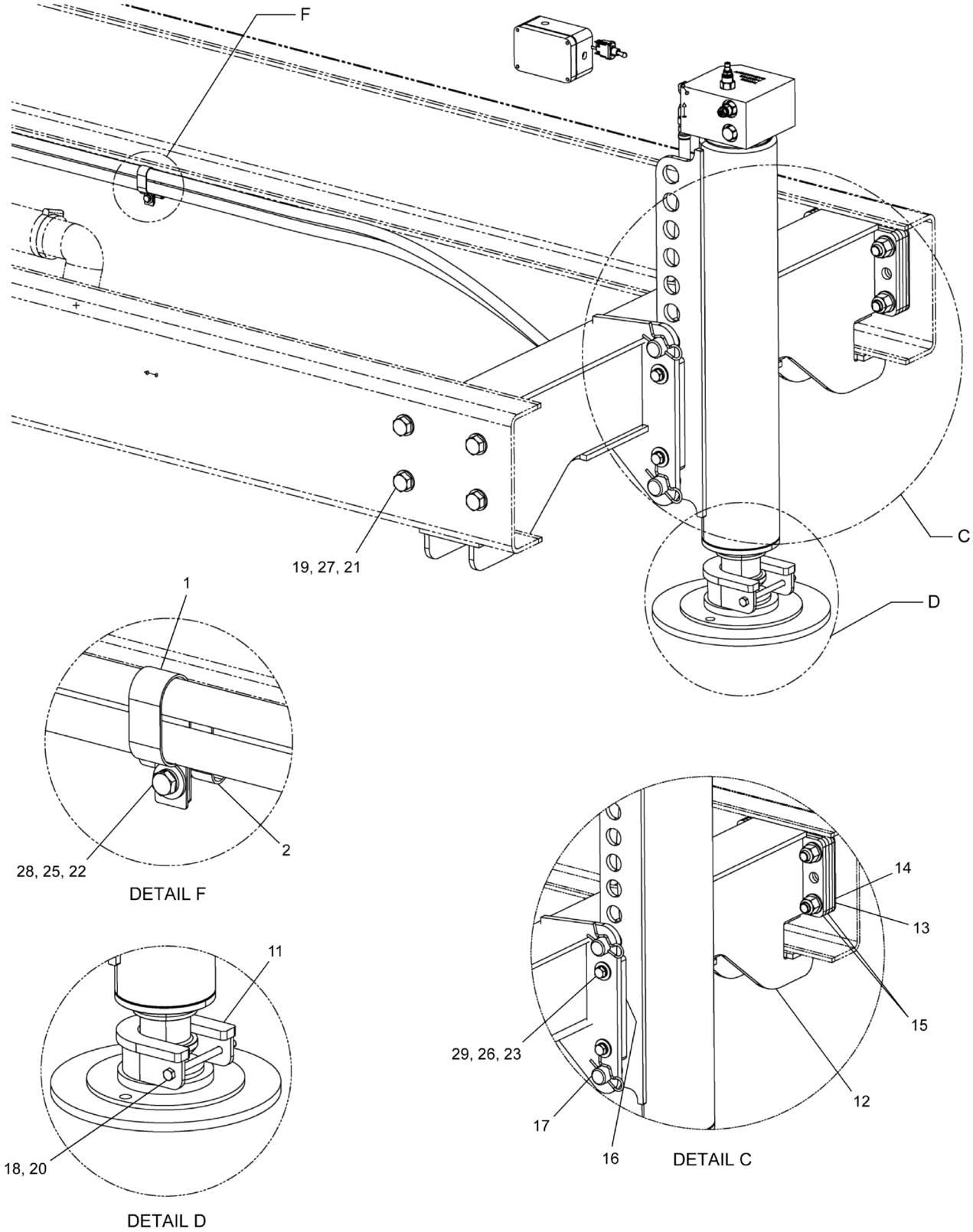

WHEN ORDERING PARTS, SPECIFY MODEL NUMBER, SERIAL NUMBER AND DESCRIPTION OF PARTS REQUIRED

REF	PART NO.	DESCRIPTION	QTY
	765-00059-2 (Rev. E)	*INSTL, 46.00 Front Jack*	
1	200B2007-67	Clamp, Double, MED, 0.88 ID	1
2	209-00879	Frame Clip Caddy, DBLE	1
3	400-04122	AUX O/R Switch	1
4*	400-25201	Harness, Front Jack	1
5	402-00049	Toggle Switch Enclosure	1
6	502-21018	Hose, Front Outrigger	2
7	513-40014	Adapter, MOFS-6/MORB-6	2
8	514-54004	Elbow, 90, MORB-6/MOFS-6	2
9	**559-00263**	Valve, Outrigger (see page 225)	1
10*	655-00013	Optional Decal Location	1
11	717F0362	Pad, Frt Jack	1
12	760-00462	FRT BMPR MTG BRKT	1
13	789-06043	Plate 7.75 X 6.00 X 0.125	2
14	789-06044	Plate 7.75 X 6.00 X 0.250	2
15	789-06045	Plate 7.75 X 6.00 X 0.375	4
16	789-06084	FRT BMPR MTG BRKT Spacer	2
17	870-30234	Front Jack Pin	2
18	N04-375C000-25	Nut, HEX 0.375-16, ST Z GR5	1
19	NYL-750C000-Y8	Nut, HEX NYL-INS 0.75-10, ST YZ G8	8
20	S01-375CE50-25	SCR, HHCS 0.375-16X5.50, ST Z GR5	1
21	S01-750CC25-Y8	SCR, HHCS 0.75-10X3.25, ST YZ GR8	8
22	SHF-250C750-25	SCR, HHCS, 0.25-20 X 0.75, ST SQC G5	1
23	SHF-500CA25-25	SCR, HHCS FT 0.50-13 X 1.25, ST Z G5	4
24	T151582	Front Bumper Outrigger	1
25	W07-250X000-20	Washer, LCK, MED SPLT 0.25, ST SQC	1
26	W07-500X000-20	WSH, LCK, MED SPLT 0.50, ST Z	4
27	WAH-75NX000-Y2	WSH, FL HRD A-NRW 0.75, ST YZ	16
28	WBR-25RX734-20	Washer, FL TYPB-REG 0.25, ST SQC	1
29	WBR-50RXA37-20	WSH, FL TYPB-REG 0.50, ST Z	4
30*	**655-00013-2**	Fifth Outrigger Jack (see page 226)	1

* ITEM NOT SHOWN IN ILLUSTRATION

WHEN ORDERING PARTS, SPECIFY MODEL NUMBER, SERIAL NUMBER AND DESCRIPTION OF PARTS REQUIRED

CHAPTER NO. 3

OPTIONAL EQUIPMENT

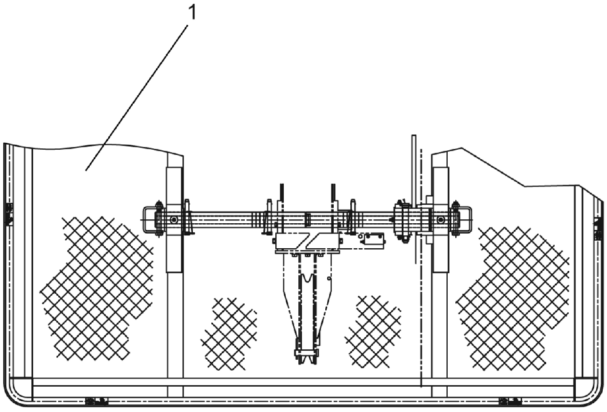

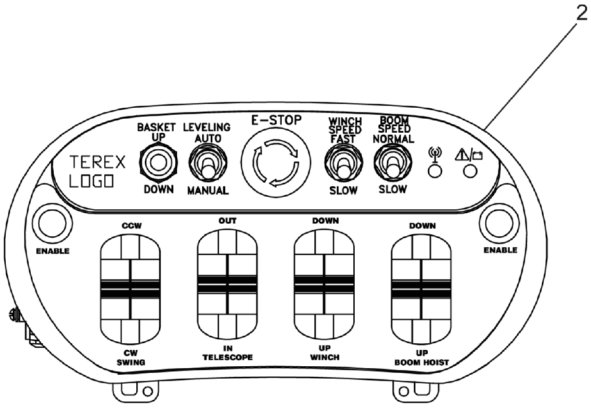

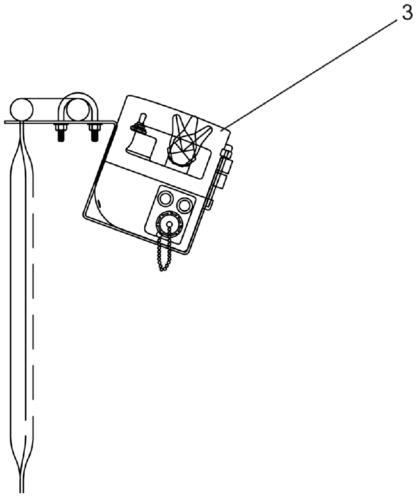

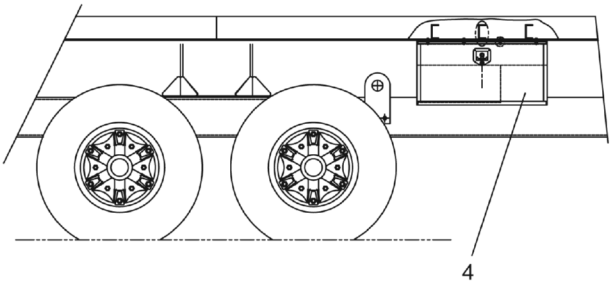

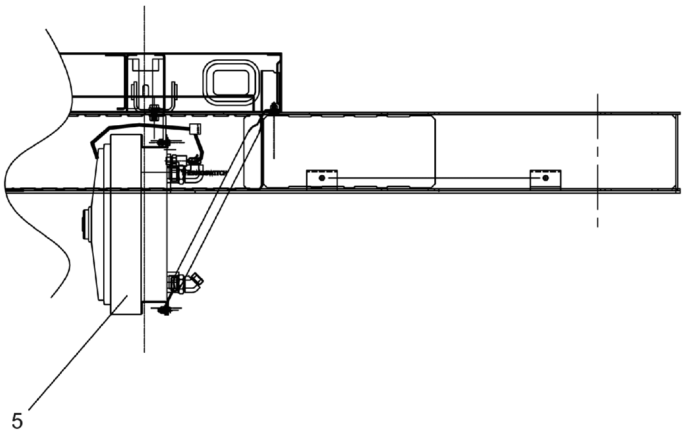

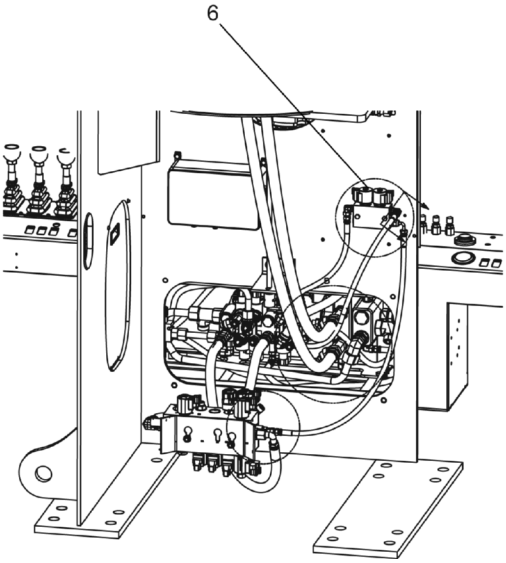

WHEN ORDERING PARTS, SPECIFY MODEL NUMBER, SERIAL NUMBER AND DESCRIPTION OF PARTS REQUIRED

REF	PART NO.	DESCRIPTION	QTY
	28-106-OPT-EQUIP (Rev. 00)	*OPTIONAL EQUIPMENT*	
1	**731-30014**	2-Man Steel Platform INSTL (see page 235)	1
2	**T128168**	Radio Remote ASSY (see page 241)	1
3	**T128721**	Radio Remote Transmitter INSTL W/ 2-Man Steel Personnel Platform (see page 249)	1
4	**697-00007-2**	Tool Box Installation-30" (see page 250)	1
5	**500-01841**	Oil Cooler INSTL, Curb Side (see page 252)	1
5A	**T119080**	Oil Cooler INSTL, Street Side (see page 255)	1
6	**500-01831**	Inching Valve Option (see page 257)	1
6A	**T117808-01**	Inching Winch (see page 283)	1

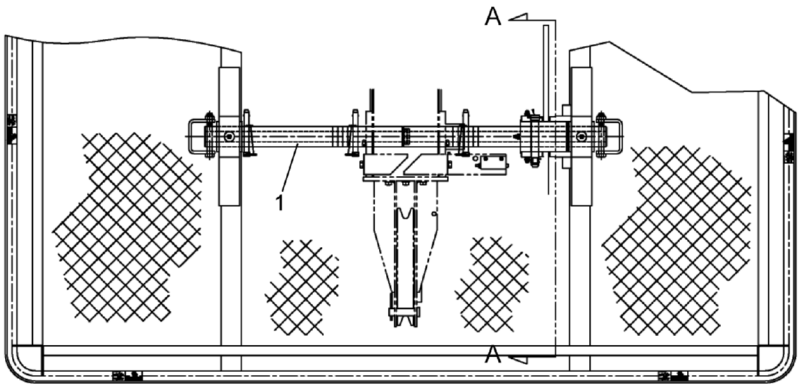

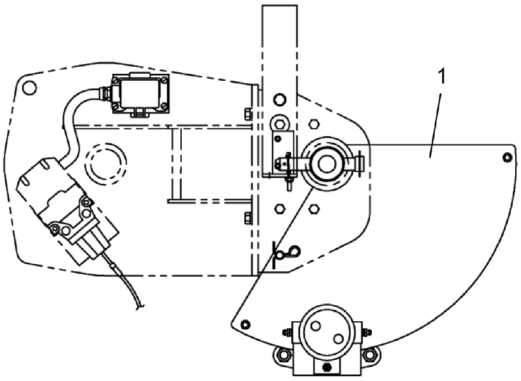

VIEW A-A

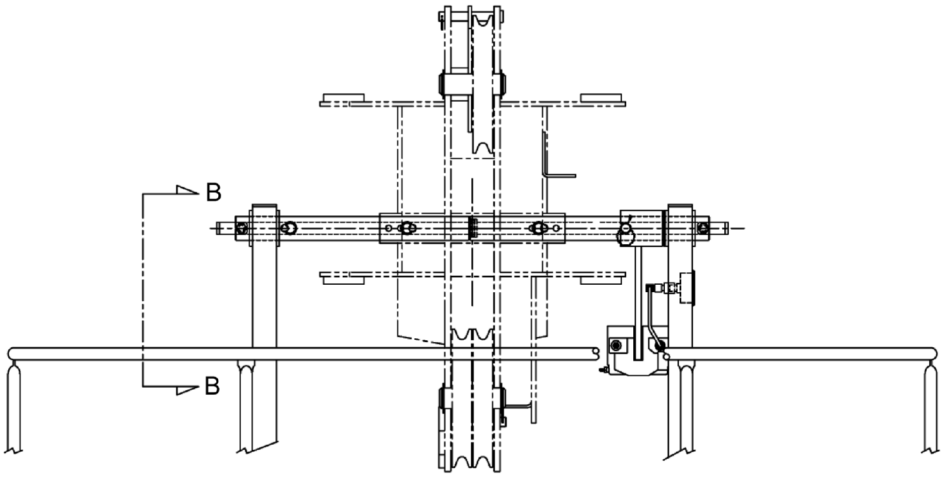

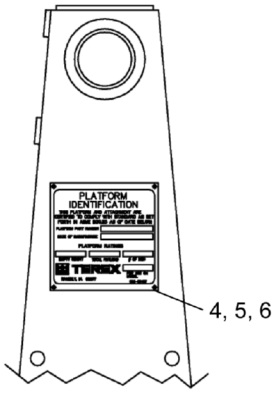

VIEW B-B

REF	PART NO.	DESCRIPTION	QTY
	731-30014 (Rev. 00)	*2-Man Steel Platform INSTL*	
1	**730-20433**	2 Man Steel Platform Assembly (see page 236)	1
2*	209-00434	Aerial Lanyard-Shock Absorb	2
3*	209-00809	Safety Harness	2
4	1006874	Platform Identification Plate	1
5	226-00023-5	Pop Rivet, ALUM, 0.125 DIA X 0.462 LG	4
6	652-00577	1 or 2 Man Platform Stamping INFO Chart	Ref

* ITEM NOT SHOWN IN ILLUSTRATION

WHEN ORDERING PARTS, SPECIFY MODEL NUMBER, SERIAL NUMBER AND DESCRIPTION OF PARTS REQUIRED

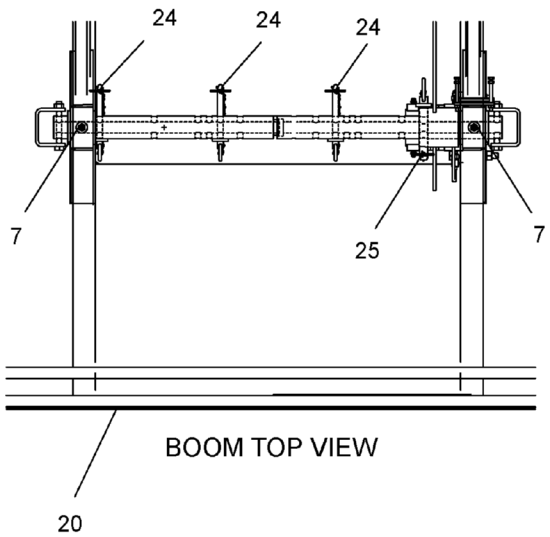

BOOM TOP VIEW

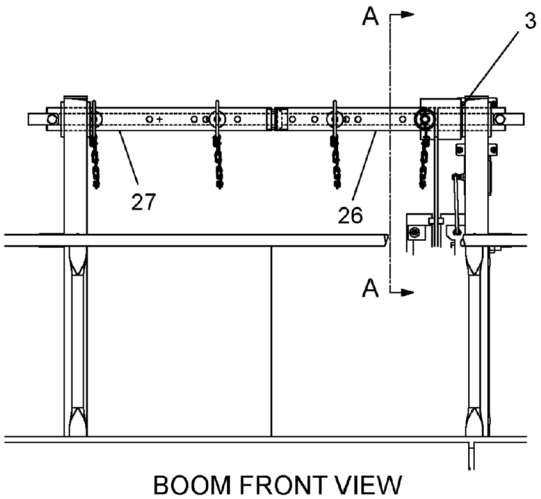

BOOM FRONT VIEW

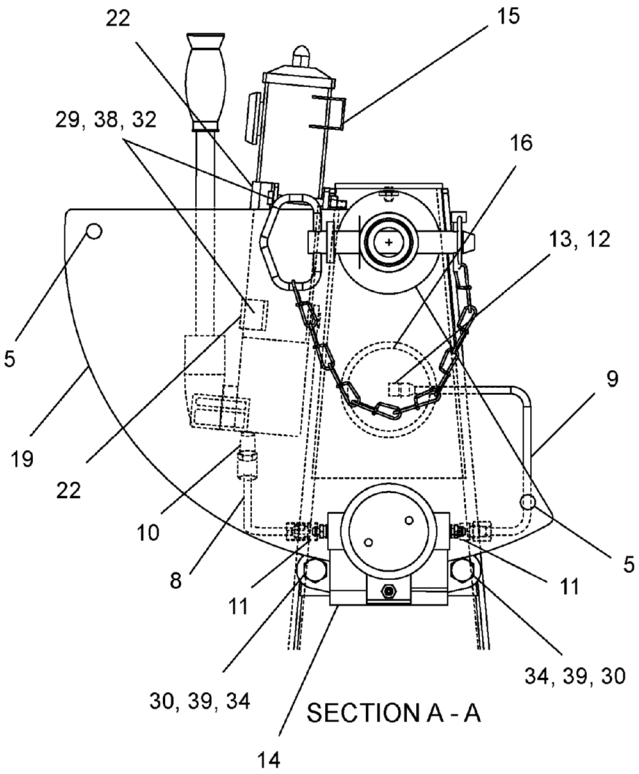

SECTION A - A

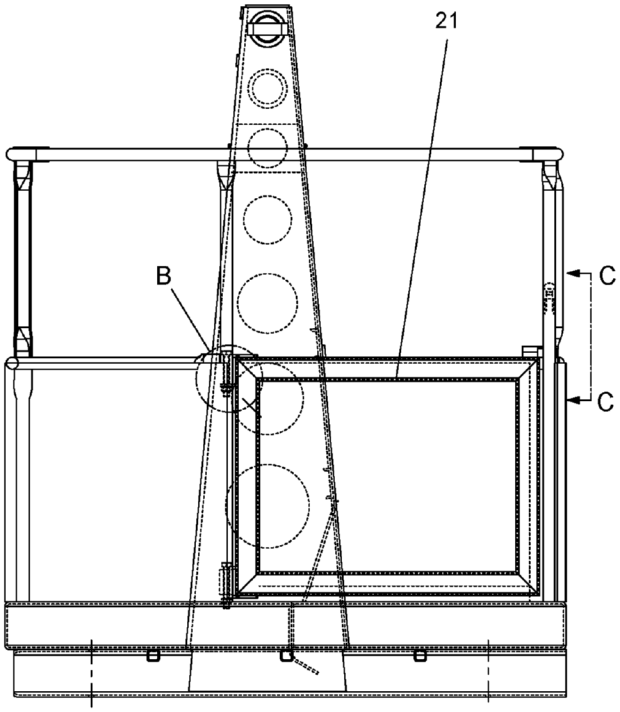

WHEN ORDERING PARTS, SPECIFY MODEL NUMBER, SERIAL NUMBER AND DESCRIPTION OF PARTS REQUIRED

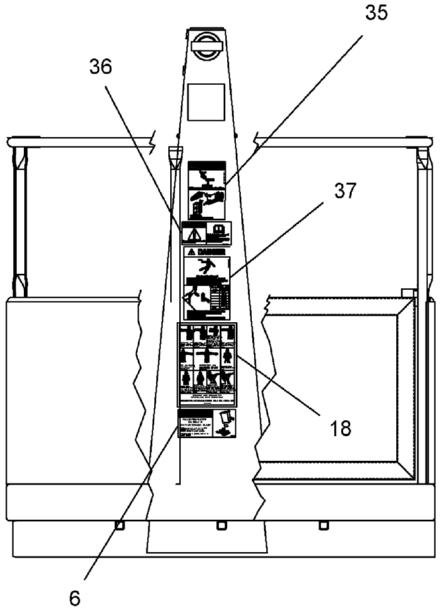

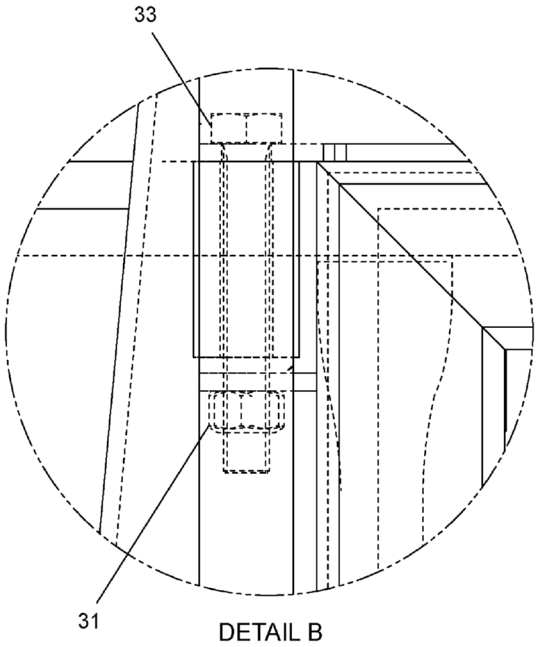

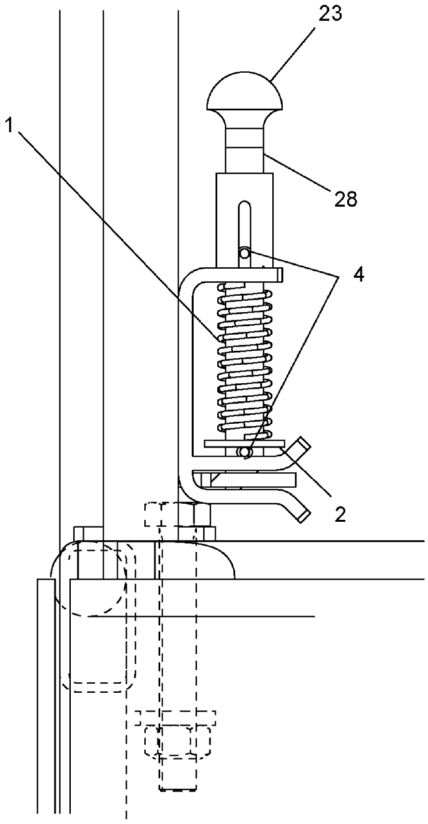

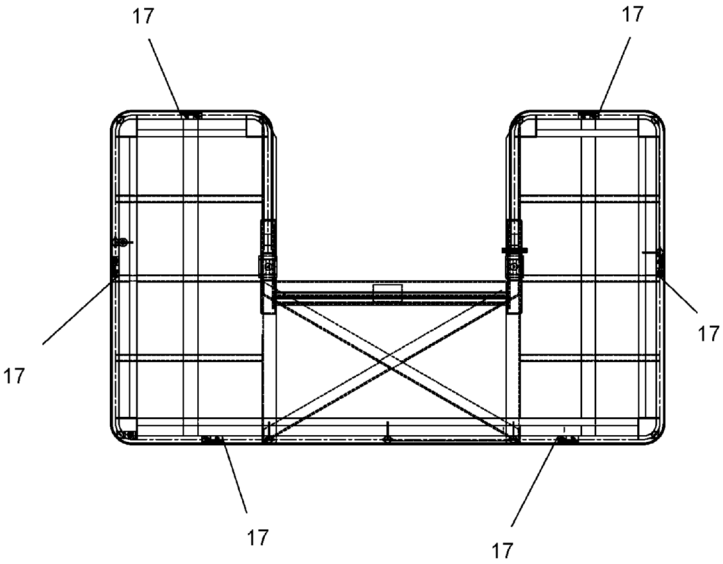

WHEN ORDERING PARTS, SPECIFY MODEL NUMBER, SERIAL NUMBER AND DESCRIPTION OF PARTS REQUIRED

REF	PART NO.	DESCRIPTION	QTY
	730-20433 (Rev. D)	*2 Man Steel Platform Assembly*	
1	202-10077	Spring, Compression	1
2	222-04011	Flatwasher-Special	1
3	222-29011	Mach BSHG-3 OD X2ID X14GA(E1N)	4
4	224-12009	Roll Pin, 1/8 X 1 LG PLT	2
5	224-19017	Roll Pin 1/2 OD X 1 1/4 LG	2
6	419264A	Platform Danger Decal (Load King TEL)	2
7	501-03001	Lube Fitting 1/4-28 UNF	2
8	510-20447	Tube ASSY, Pump-2-Man PLTFRM	1
9	510-20448	Tube ASSY, Brake-2-Man PLTFRM	1
10	513-20001	CONN STL 1/4JIC 1/4MPT	1
11	513-20002	CONN TOMPK#6400-4	2
12	513-20006	CONN STL 1/4JIC 1/4FPT	1
13	514-62001	Elbow	1
14	559-00055	Hydraulic Brake-Mico	1
15	559-00056	Hand Pump-ENERPAC	1
16	600-40280	Pressure Gauge-Console	1
17	1006869	Decal-Hands Off Rail	6
18	652-00496	Decal, Crane Hand Signals	2
19	730-20338	Hydraulic Brake Disc Segment	1
20	730-20434	Weldment 2-Man Platform	1
21	730-20441	Weldment 2-Door ST Platform	1
22	771-00128	Hand Pump BRKT-New Design	2
23	808-00031	Push Pull KNOB Black	1
24	870-00131	Pin ASSY, Jib Restrain	3
25	870-00149	Hitch Pin ASSY, 3/4 DIA	1
26	**870-60220**	LH 2-Man Platform Pin ASSY (see page 239)	1
27	**870-60222**	RH 2-Man Platform Pin ASSY (see page 240)	1
28	870-80013	Pin, Latch	1
29	N04-250C000-25	Nut, HEX 0.25-20, ST SQC G5	4
30	N04-500C000-25	Nut, HEX 0.50 - 13, ST Z GR5	2
31	NTP-500C000-2C	Nut, HEX TPLCK 0.50-13, ST SQC GC	2
32	S01-250CB50-25	Screw, HHCS 0.25-20 X 2.50, ST SQC G5	4
33	SHF-500CC50-25	SCR, HHCS FT 0.50-13X3.50, ST Z G5	2
34	SHF-500CD00-25	SCR, HHCS FT 0.50-13 X 4.00, ST SQC G5	2
35	T121866	Decal - Jib Removal W/Lift	2
36	T127259	Decal-Remote Warning	2
37	1007054	Decal, Personnel Platform Electrocution	2
38	W07-250X000-20	Washer, LCK, MED SPLT 0.25, ST SQC	4
39	W07-500X000-20	WSH, LCK, MED SPLT 0.50, ST Z	2

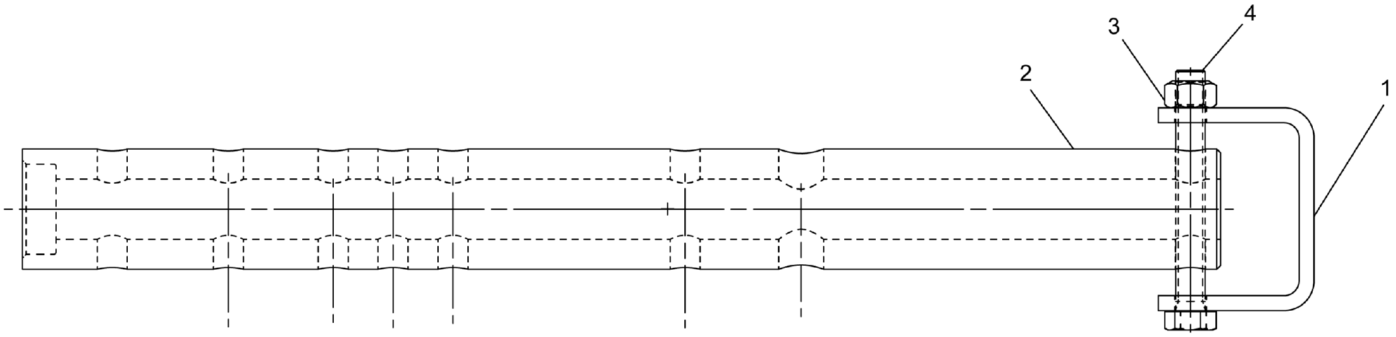

REF	PART NO.	DESCRIPTION	QTY
	870-60220 (Rev. B)	*LH 2-Man Platform Pin ASSY*	
1	729-02576	Pin Handle	1
2	870-60219	Pin, 2-Man Platform LH	1
3	NTP-500C000-2C	Nut, HEX TPLCK 0.50-13, ST SQC GC	1
4	SHF-500CD00-25	SCR, HHCS FT 0.50-13 X 4.00, ST SQC G5	1

WHEN ORDERING PARTS, SPECIFY MODEL NUMBER, SERIAL NUMBER AND DESCRIPTION OF PARTS REQUIRED

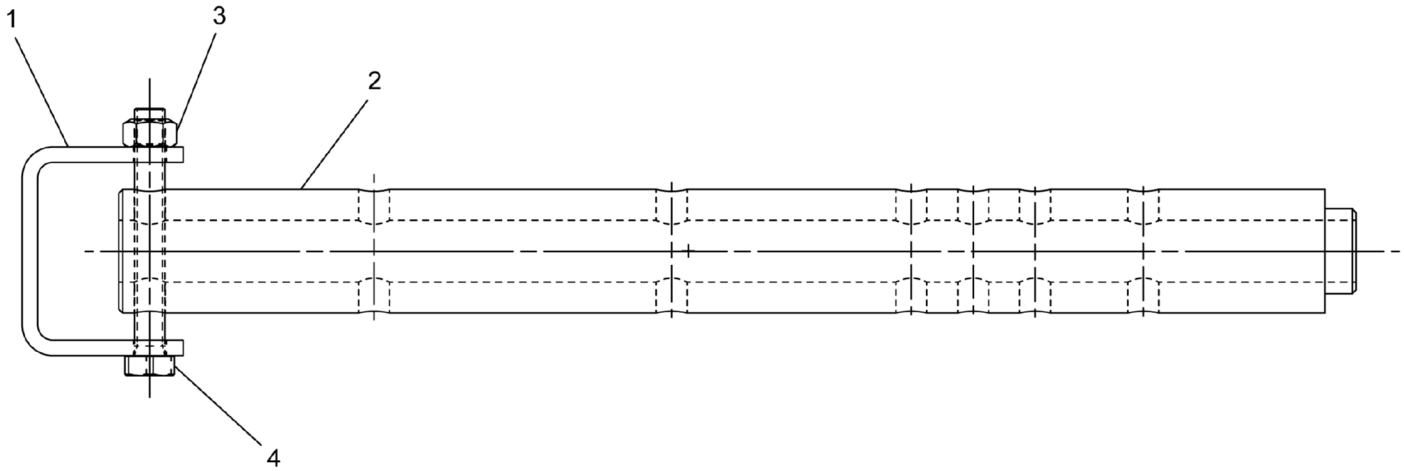

REF	PART NO.	DESCRIPTION	QTY
	870-60222 (Rev. B)	*RH 2-Man Platform Pin ASSY*	
1	729-02576	Pin Handle	1
2	870-60221	Pin, 2-Man Platform RH	1
3	NTP-500C000-2C	Nut, HEX TPLCK 0.50-13, ST SQC GC	1
4	SHF-500CD00-25	SCR, HHCS FT 0.50-13 X 4.00, ST SQC G5	1

WHEN ORDERING PARTS, SPECIFY MODEL NUMBER, SERIAL NUMBER AND DESCRIPTION OF PARTS REQUIRED

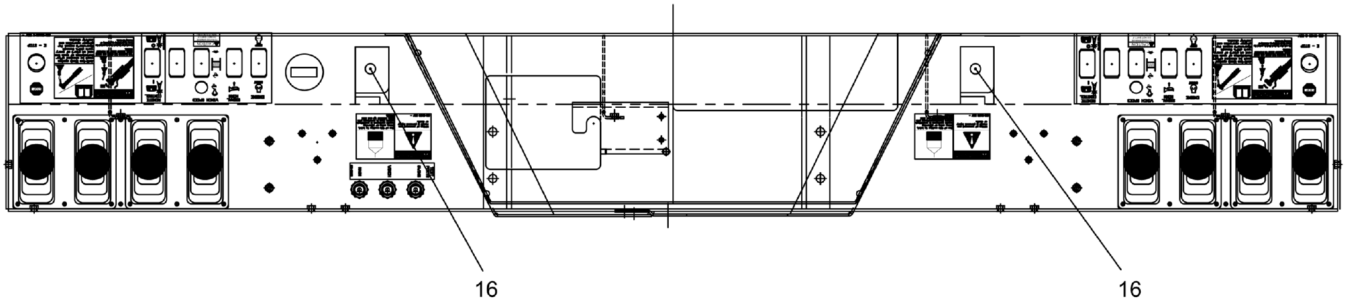

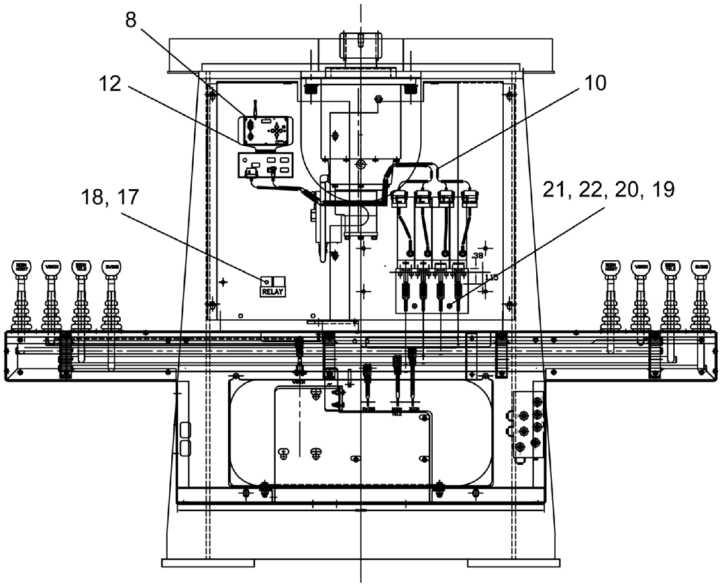

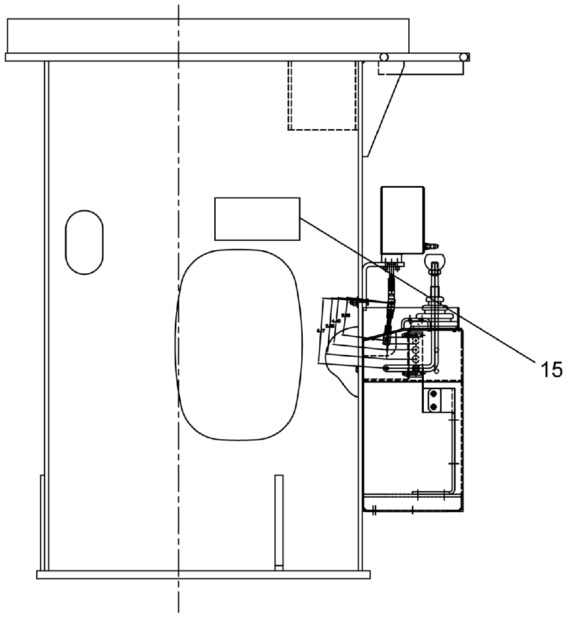

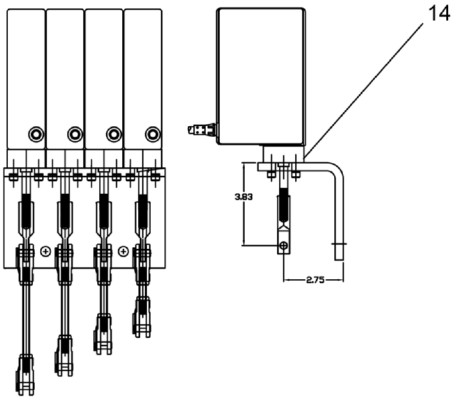

RADIO ACTUATOR VALVE ASSEMBLY

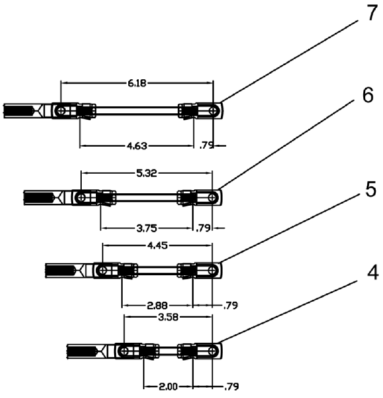

ACTUATOR LINKAGE KIT

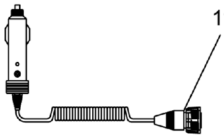

CIGRETTE LIGHTER CHARGER

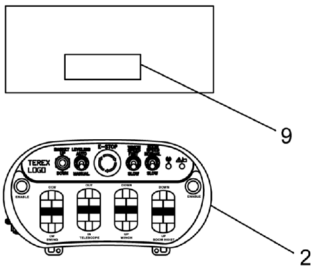

RADIO REMOTE TRANSMITTER

WHEN ORDERING PARTS, SPECIFY MODEL NUMBER, SERIAL NUMBER AND DESCRIPTION OF PARTS REQUIRED

REF	PART NO.	DESCRIPTION	QTY
	T128168 (Rev. C)	*Radio Remote ASSY*	
1*	T127004	Kit Radio Remote Control System	1
2	T127365	Radio Remote Transmitter	1
3*	**T127100**	Actuator Linkage Kit (see page 243)	1
4	**T127396**	Actuator Linkages Sub ASSY 3.72 (see page 244)	1
5	**T127397**	Actuator Linkages Sub ASSY 4.59 (see page 245)	1
6	**T127367**	Actuator Linkages Sub ASSY 5.46 (see page 246)	1
7	**T127101**	Actuator Linkages Sub ASSY 6.32 (see page 247)	1
8	T127366	Receiver, Radio Remote	1
9	T127259	Decal-Remote Warning	1
10	T127369	Wire Harness, Ranger 4 Crane	1
11	403-00107	Cigarette Lighter Charger	1
12	T128166	Mounting Bracket	1
13*	T127105	Actuator 3.0 Inch Travel	4
14	**T127106**	Radio Actuator Valve Assembly (see page 248)	1
15	650-00663	Decal, Operating INSTR. Radio Remote	2
16	651-00432	Decal, Remote Control	2
17	NYL-190C000-22	Nut, HEX NYL-INS 10-24, ST SQC G2	1
18	SL4-190C750-20	SCR, SLT RND MS 10-24 X 0.750, ST SQC	1
19	N04-375C000-25	Nut, HEX 0.375-16, ST Z GR5	2
20	W07-375X000-20	WSH, LCK, MED SPLT 0.375, ST Z	2
21	WAH-37NX000-Y2	WSH, FL HRD A-NRW 0.375, ST SQC	2
22	S01-375CA50-25	SCR, HHCS 0.375-16 X 1.50, ST SQC GR5	2

* ITEM NOT SHOWN IN ILLUSTRATION

WHEN ORDERING PARTS, SPECIFY MODEL NUMBER, SERIAL NUMBER AND DESCRIPTION OF PARTS REQUIRED

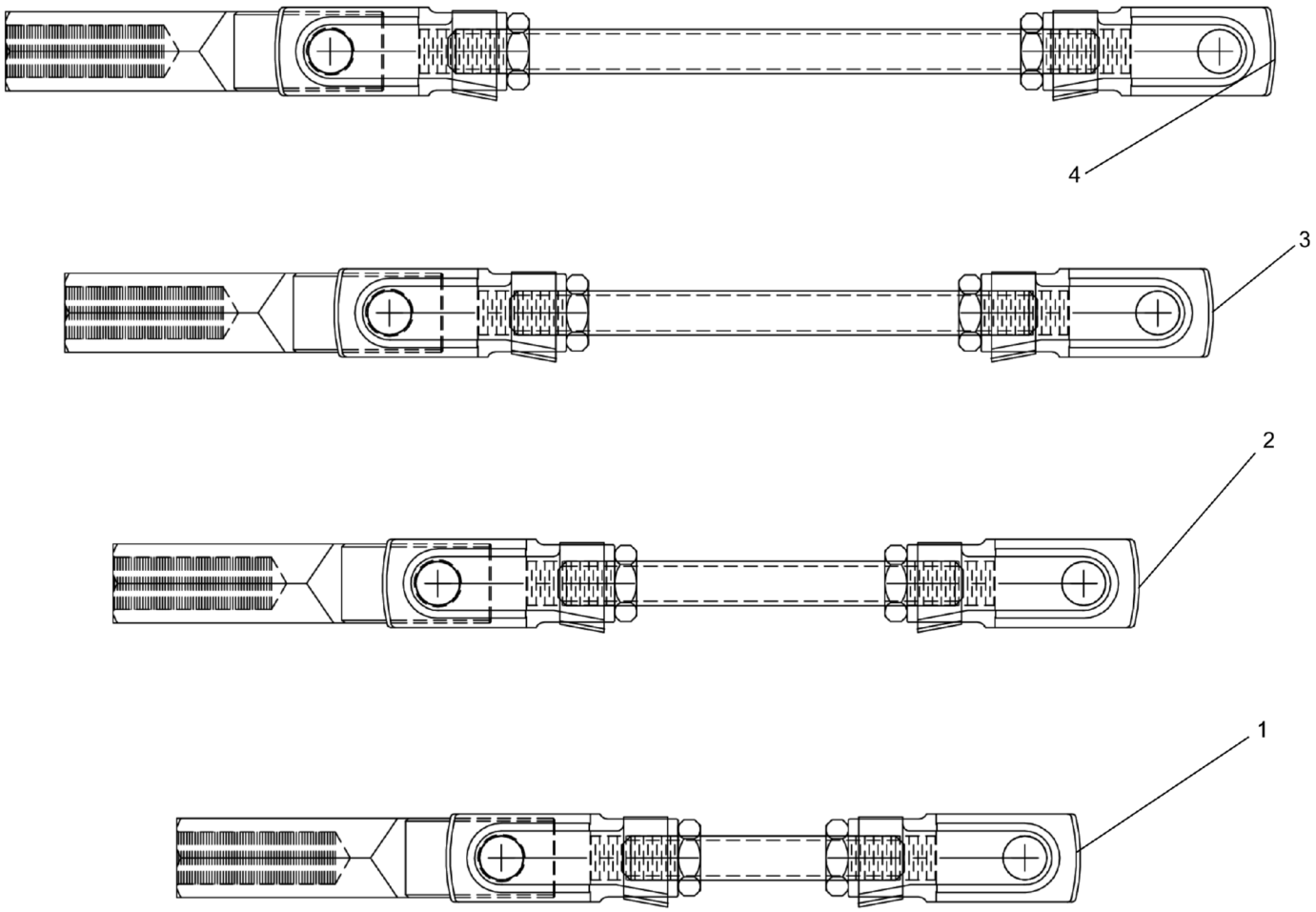

REF	PART NO.	DESCRIPTION	QTY
	T127100 (Rev. A)	*Actuator Linkage Kit*	
1	**T127396**	Actuator Linkages Sub ASSY 3.72 (see page 244)	1
2	**T127397**	Actuator Linkages Sub ASSY 4.59 (see page 245)	1
3	**T127367**	Actuator Linkages Sub ASSY 5.46 (see page 246)	1
4	**T127101**	Actuator Linkages Sub ASSY 6.32 (see page 247)	1

WHEN ORDERING PARTS, SPECIFY MODEL NUMBER, SERIAL NUMBER AND DESCRIPTION OF PARTS REQUIRED

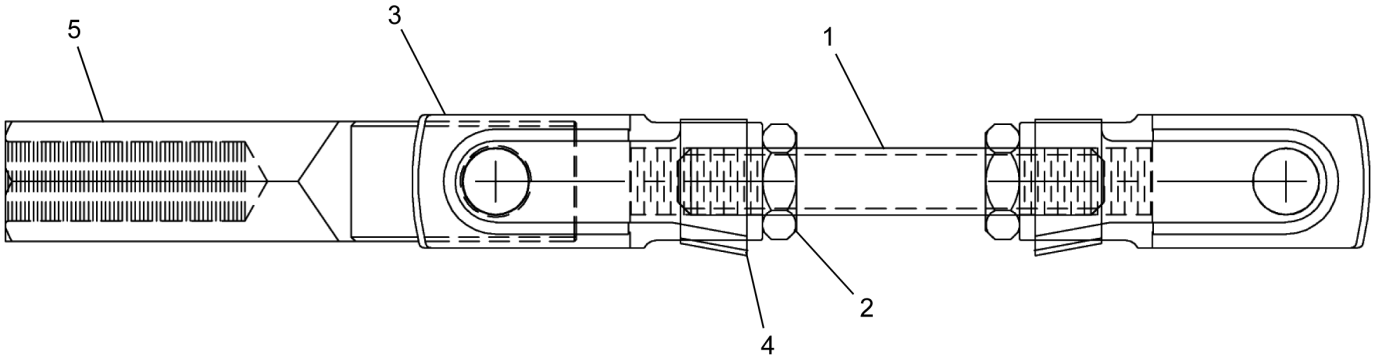

REF	PART NO.	DESCRIPTION	QTY
	T127396 (Rev. A)	*Actuator Linkages Sub ASSY 3.72*	
1	806-00279-1	Actuator Link Thread Rod 5/16-24 X 2.00	1
2	N05-312F000-25	Nut, HEX Jam 0.3125-24, ST SQC G5	2
3	809-00510	Clevis Fork 0.3125	2
4	809-00511	Clevis Bracket Weldment 0.3125	2
5	809-00521	Valve Rod End 3/8-25 THRD 5/16 Pin	1

WHEN ORDERING PARTS, SPECIFY MODEL NUMBER, SERIAL NUMBER AND DESCRIPTION OF PARTS REQUIRED

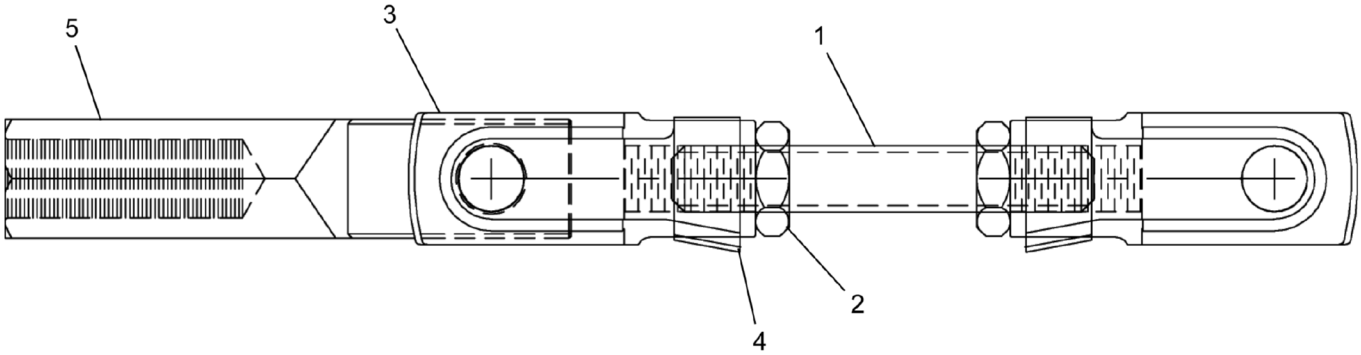

REF	PART NO.	DESCRIPTION	QTY
	T127397 (Rev. A)	*Actuator Linkages Sub ASSY 4.59*	
1	806-00279-2	Actuator Link Thread Rod 5/16-24 X 2.88	1
2	N05-312F000-25	Nut, HEX Jam 0.3125-24, ST SQC G5	2
3	809-00510	Clevis Fork 0.3125	2
4	809-00511	Clevis Bracket Weldment 0.3125	2
5	809-00521	Valve Rod End 3/8-25 THRD 5/16 Pin	1

WHEN ORDERING PARTS, SPECIFY MODEL NUMBER, SERIAL NUMBER AND DESCRIPTION OF PARTS REQUIRED

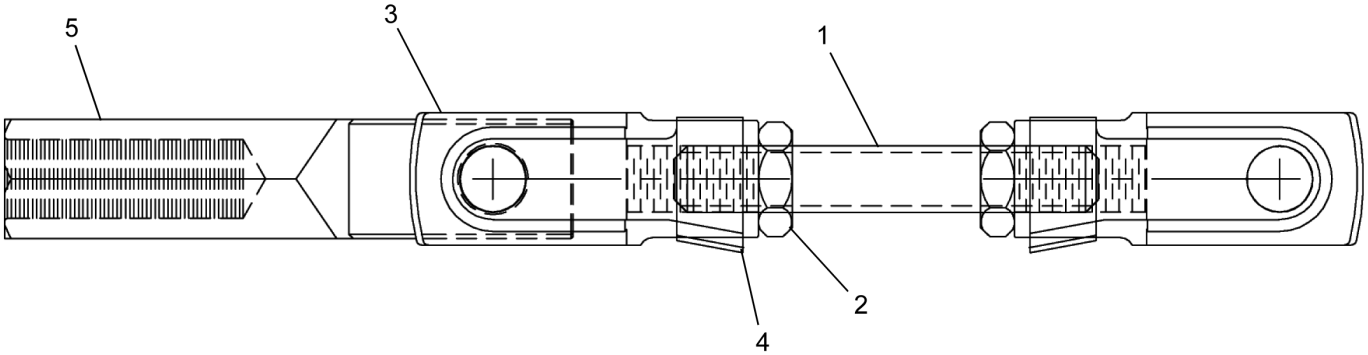

REF	PART NO.	DESCRIPTION	QTY
	T127367 (Rev. A)	*Actuator Linkages Sub ASSY 5.46*	
1	806-00279-3	Actuator Link Thread Rod 5/16-24 X 3.75	1
2	N05-312F000-25	Nut, HEX Jam 0.3125-24, ST SQC G5	2
3	809-00510	Clevis Fork 0.3125	2
4	809-00511	Clevis Bracket Weldment 0.3125	2
5	809-00521	Valve Rod End 3/8-25 THRD 5/16 Pin	1

WHEN ORDERING PARTS, SPECIFY MODEL NUMBER, SERIAL NUMBER AND DESCRIPTION OF PARTS REQUIRED

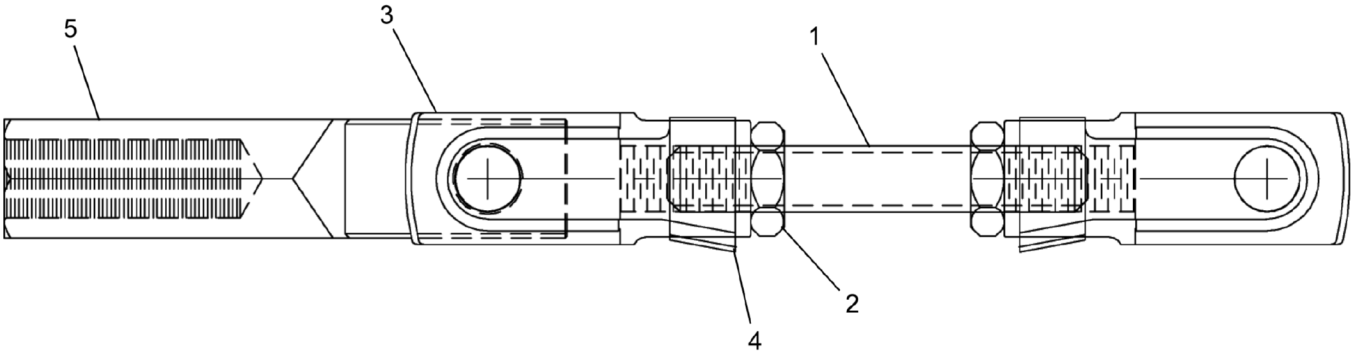

REF	PART NO.	DESCRIPTION	QTY
	T127101 (Rev. A)	*Actuator Linkages Sub ASSY 6.32*	
1	806-00279-4	Actuator Link Thread Rod 5/16-24 X 4.63	1
2	N05-312F000-25	Nut, HEX Jam 0.3125-24, ST SQC G5	2
3	809-00510	Clevis Fork 0.3125	2
4	809-00511	Clevis Bracket Weldment 0.3125	2
5	809-00521	Valve Rod End 3/8-25 THRD 5/16 Pin	1

WHEN ORDERING PARTS, SPECIFY MODEL NUMBER, SERIAL NUMBER AND DESCRIPTION OF PARTS REQUIRED

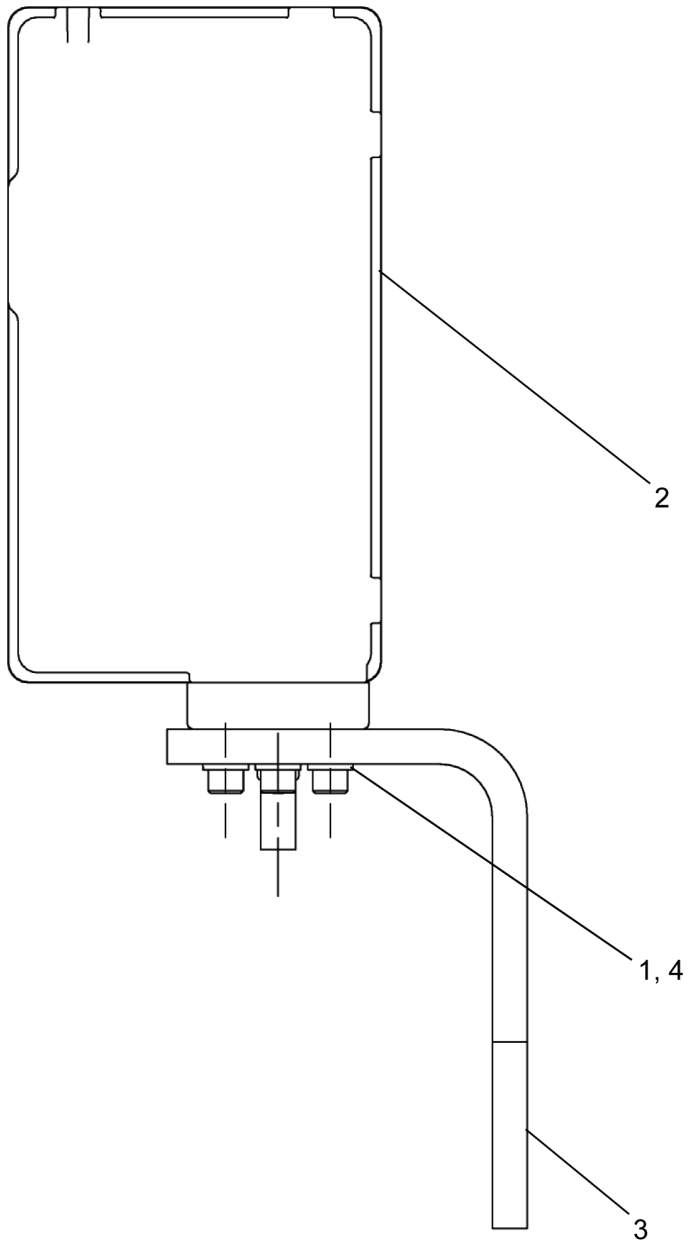

REF	PART NO.	DESCRIPTION	QTY
	T127106 (Rev. A)	*Radio Actuator Valve Assembly*	
1	W07-250X000-20	Washer, LCK, MED SPLT 0.25, ST SQC	16
2	T127105	Actuator 3.0 Inch Travel	Ref
3	T127086	Plate, Actuator MTG BRKT	1
4	S14-250C750-H2	SCR, SHCS 0.25-20 X 0.75, ST Z	16

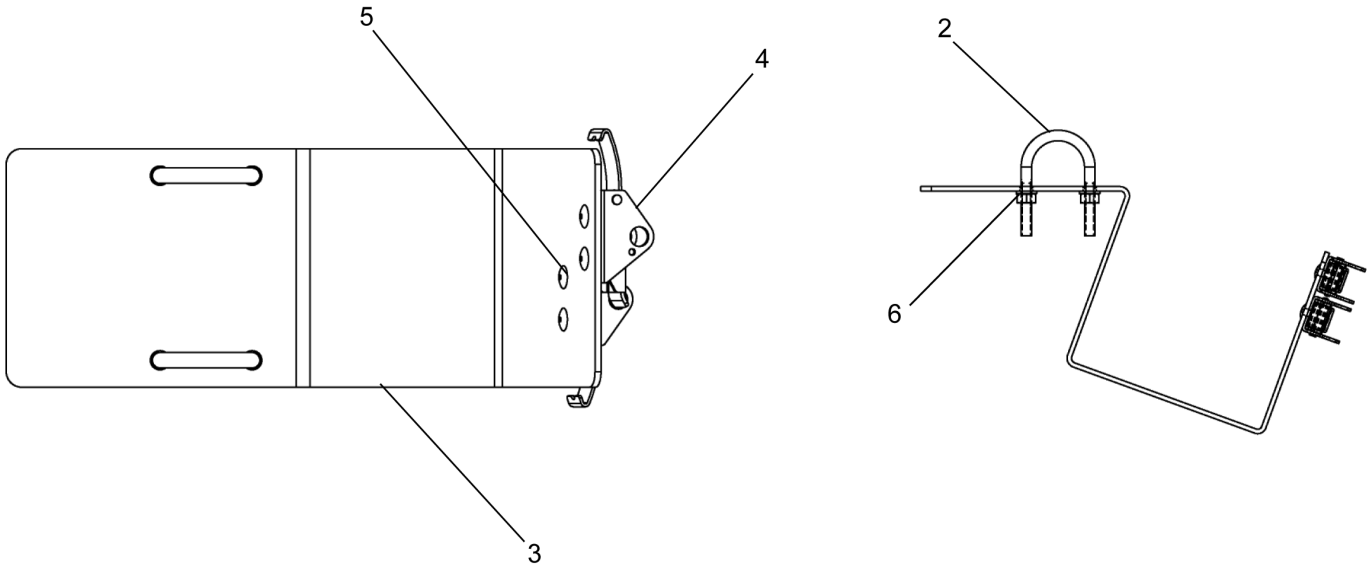

REF	PART NO.	DESCRIPTION	QTY
	T128721 (Rev. A)	*Radio Remote Transmitter INSTL W/ 2-Man Steel Personnel Platform*	
1*	T127520	Bracket ASSY, Remote (Includes Items 2 thru 6)	1
2	220-99062	U-Bolt 1/4 (Fastenal 42001)	2
3	T127239	Bracket, Remote Mount	1
4	T127240	Latch, Draw	2
5	VBB-156X338-E1	RVT, BTNHD, BLND 0.187 X 0.338, SS301/302	4
6	W07-250X000-20	Washer, LCK, MED SPLT 0.25, ST SQC	4

* ITEM NOT SHOWN IN ILLUSTRATION

WHEN ORDERING PARTS, SPECIFY MODEL NUMBER, SERIAL NUMBER AND DESCRIPTION OF PARTS REQUIRED

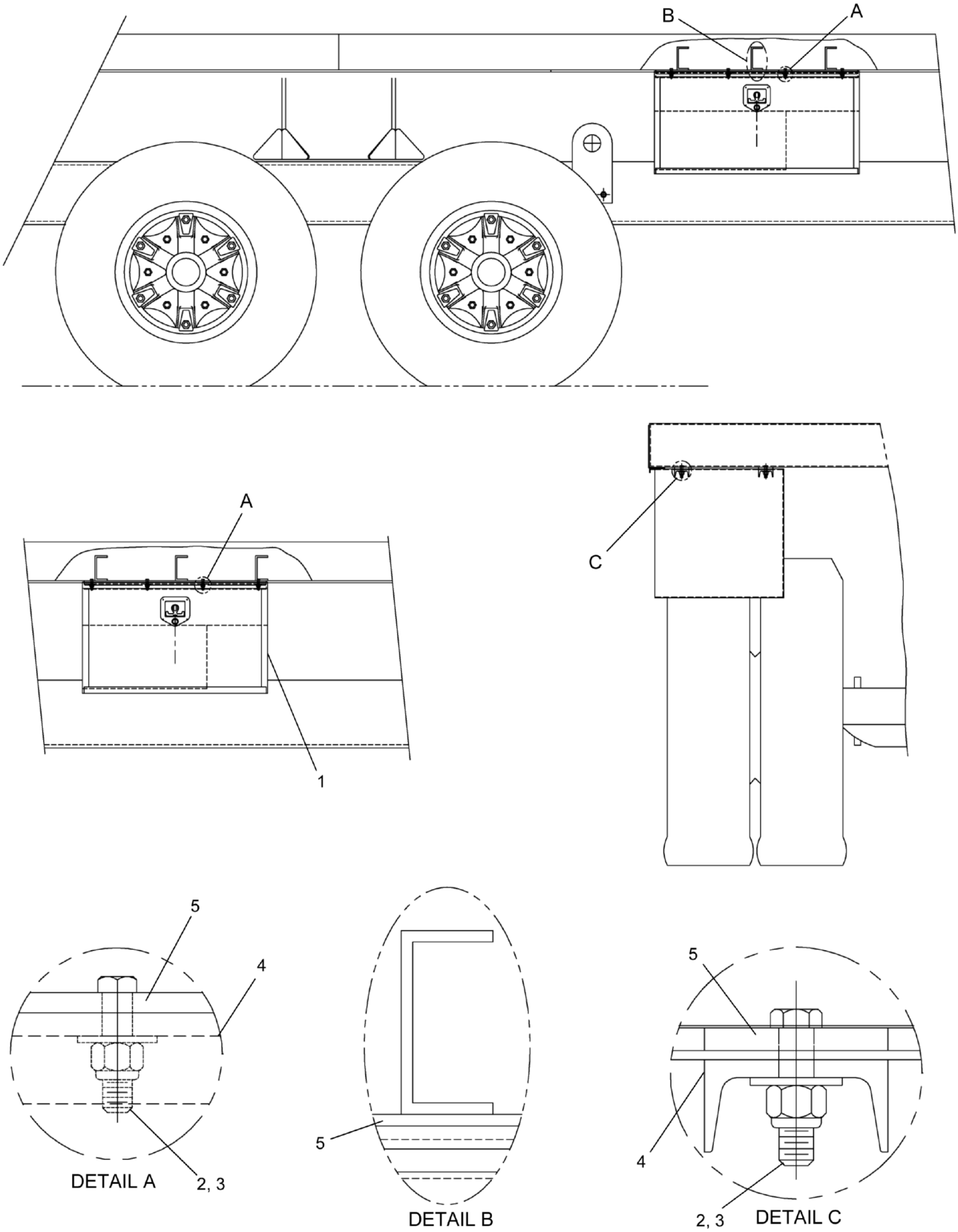

WHEN ORDERING PARTS, SPECIFY MODEL NUMBER, SERIAL NUMBER AND DESCRIPTION OF PARTS REQUIRED

REF	PART NO.	DESCRIPTION	QTY
	697-00007-2 (Rev. C)	*Tool Box Installation-30"*	
1	600-32576	Tool Box - 30 x 18 x 18	1
2	221-00032-2	Nylon Lock HEX Nut 3/8-16 Zinc	8
3	222-00025-8	Flat Washer, 3/8 Zinc PLTD	8
4	786-01896.3	30" Tool Box MTG Channel	1
5	770-02847.3	Stud Bar - 30" Tool Box S/W	2

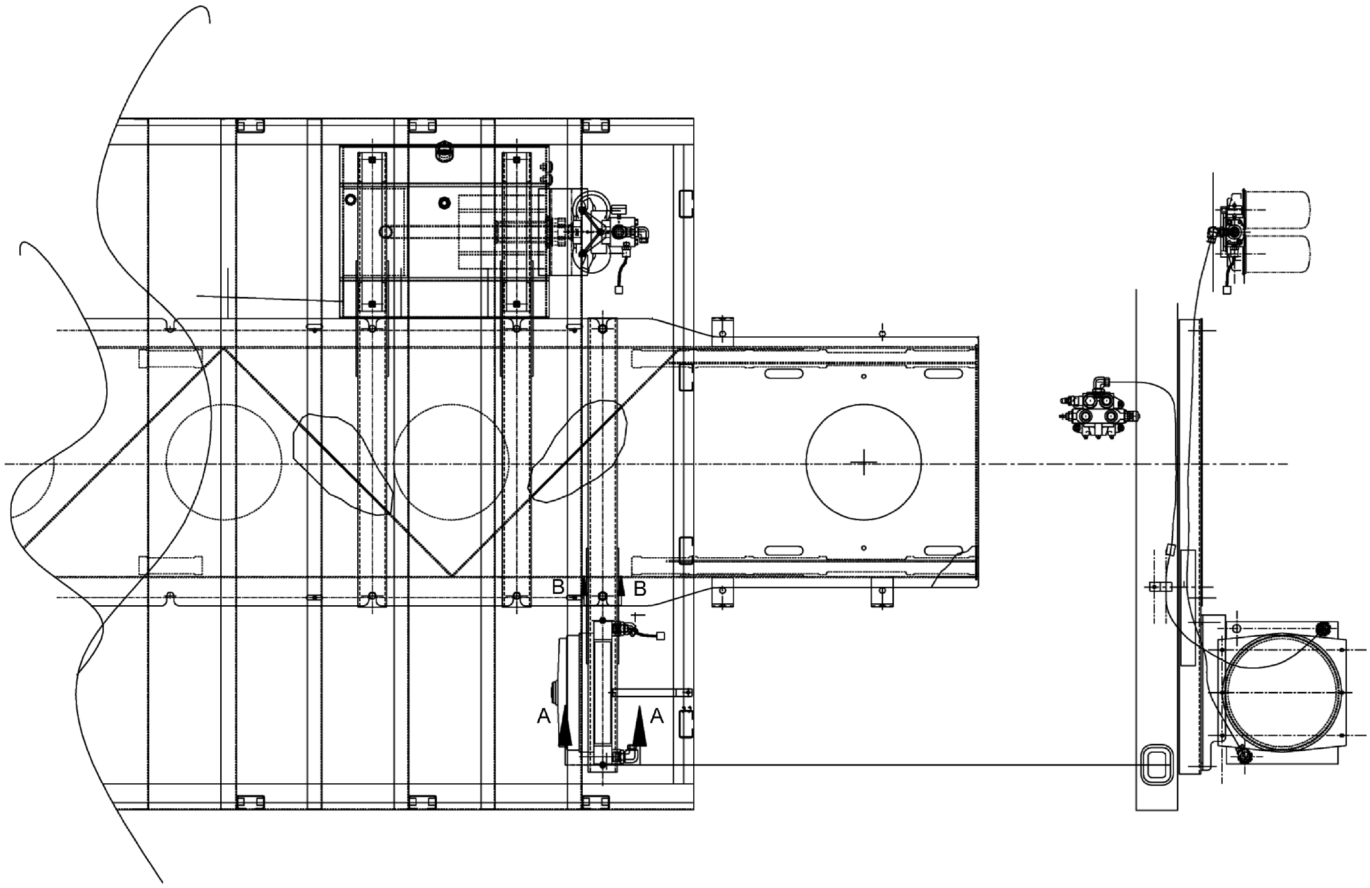

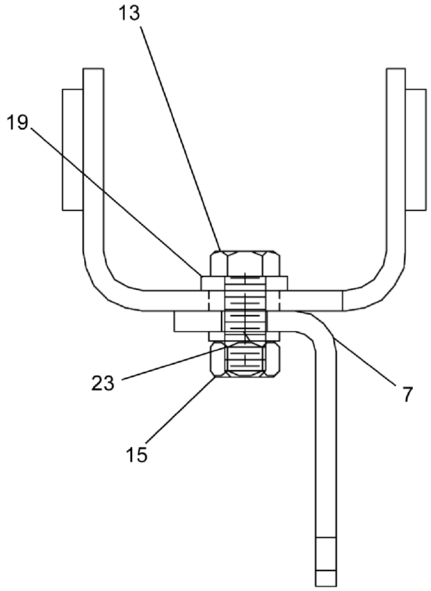

VIEW A - A

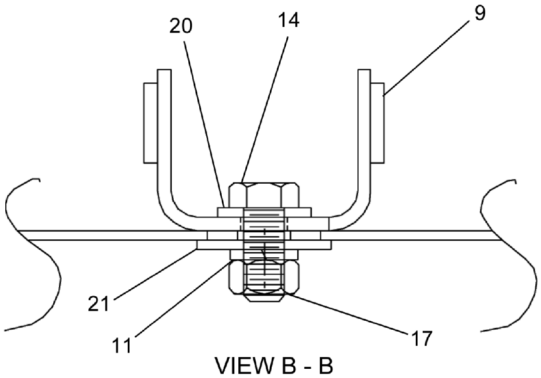

VIEW B - B

WHEN ORDERING PARTS, SPECIFY MODEL NUMBER, SERIAL NUMBER AND DESCRIPTION OF PARTS REQUIRED

LOAD KING BY CUSTOM TRUCK 1 SOURCE	**OIL COOLER INSTL, CURB SIDE**	DATE: Revised 11-2017	**CHAPTER**
		MODEL: 28-106	**3**
		PAGE: 252	

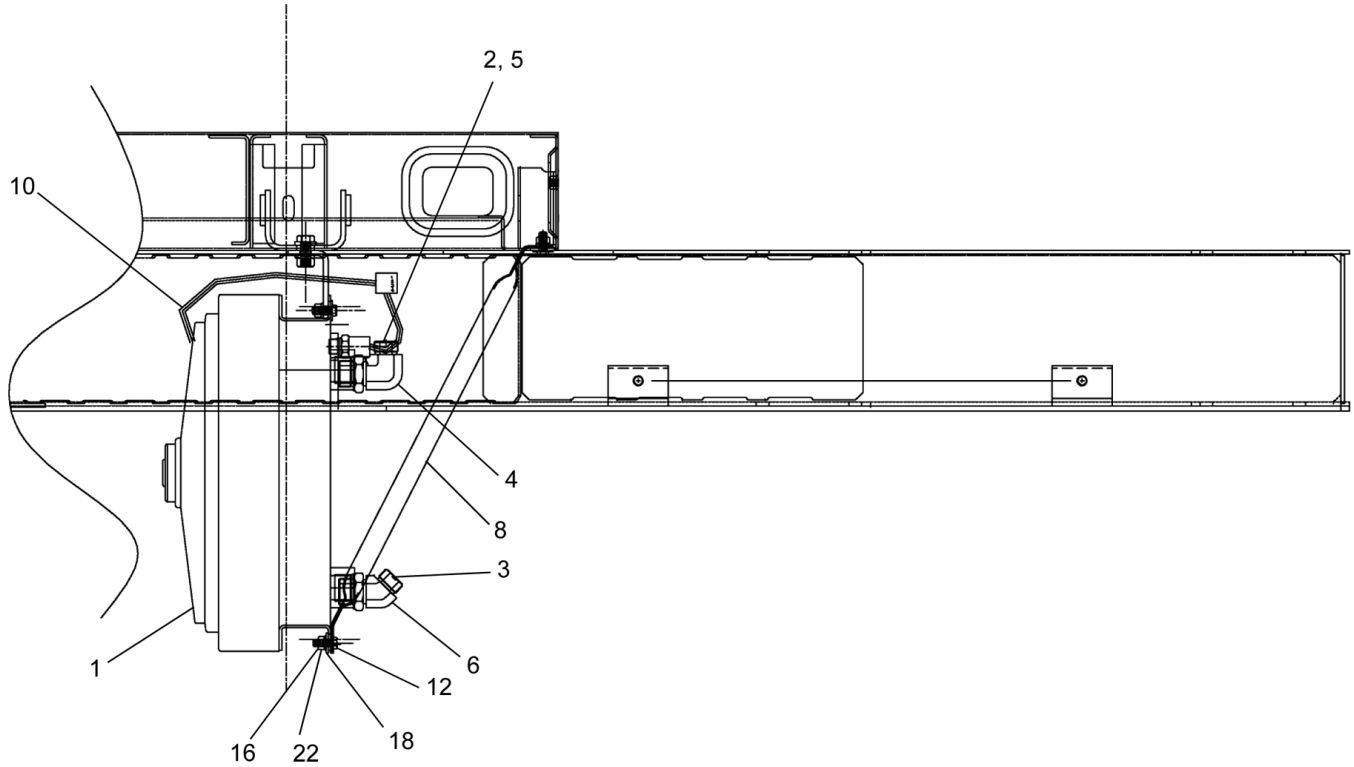
2, 5
10
4
8
3
6
12
1
16
22
18

REF	PART NO.	DESCRIPTION	QTY
	500-01841 (Rev. C)	*Oil Cooler INSTL, Curb Side*	
1	501-05021	Oil Cooler, 64K 12V Fan	1
2	502-41013	Hose, Cooler Return	1
3	T119082	Hose ASSY Main Valve C.S.	1
4	514-59023	Elbow 90 DEG, MOFS - 12 / MORB -16	1
5	514-67004	Elbow Swivel 90°	1
6	515-07003	Fitting, 45 DEG, FGFF-6802-12-16	1
7	785-02123	Angle, Cooler	1
8	785-02124	Angle, Bracket, Cooler	1
9	875-90370.3	MTG Bracket, HYD. RES.	1
10	400-25222	Wiring Harness, Oil Cooler	1
11	W07-750X000-20	WSH, LCK, MED SPLT 0.75, ST Z	2
12	SHF-312CA00-25	SCR, HHCS FT 0.312-18X1.00, ST Z G5	6
13	SHF-500CA25-25	SCR, HHCS FT 0.50-13 X 1.25, ST Z G5	2
14	S01-750CA75-Y8	SCR, HHCS 0.75-10 X 1.75, ST Z G8	2
15	N04-500C000-25	Nut, HEX 0.50 - 13, ST Z GR5	2
16	N04-312C000-25	Nut, HEX 0.3125-18, ST SQC G5	6
17	N04-750C000-Y8	Nut, HEX 0.75-10, ST YZ GR8	2
18	WAN-31NX000-20	WSH, FL TYPA-NRW 0.3125, ST SQC	6
19	WAN-50NX000-20	WSH, FL TYPA-NRW 0.50, ST Z	2
20	WAH-75NX000-20	WSH, FL HRD A-NRW 0.75, ST SQC	2
21	WFD-750XB00-E8	WSH FNDR 0.75 X 2.00, SS18-8	2
22	W07-312X000-20	WSH, LCK, MED SPLT 0.3125, ST SQC	6
23	W07-500X000-20	WSH, LCK, MED SPLT 0.50, ST Z	2

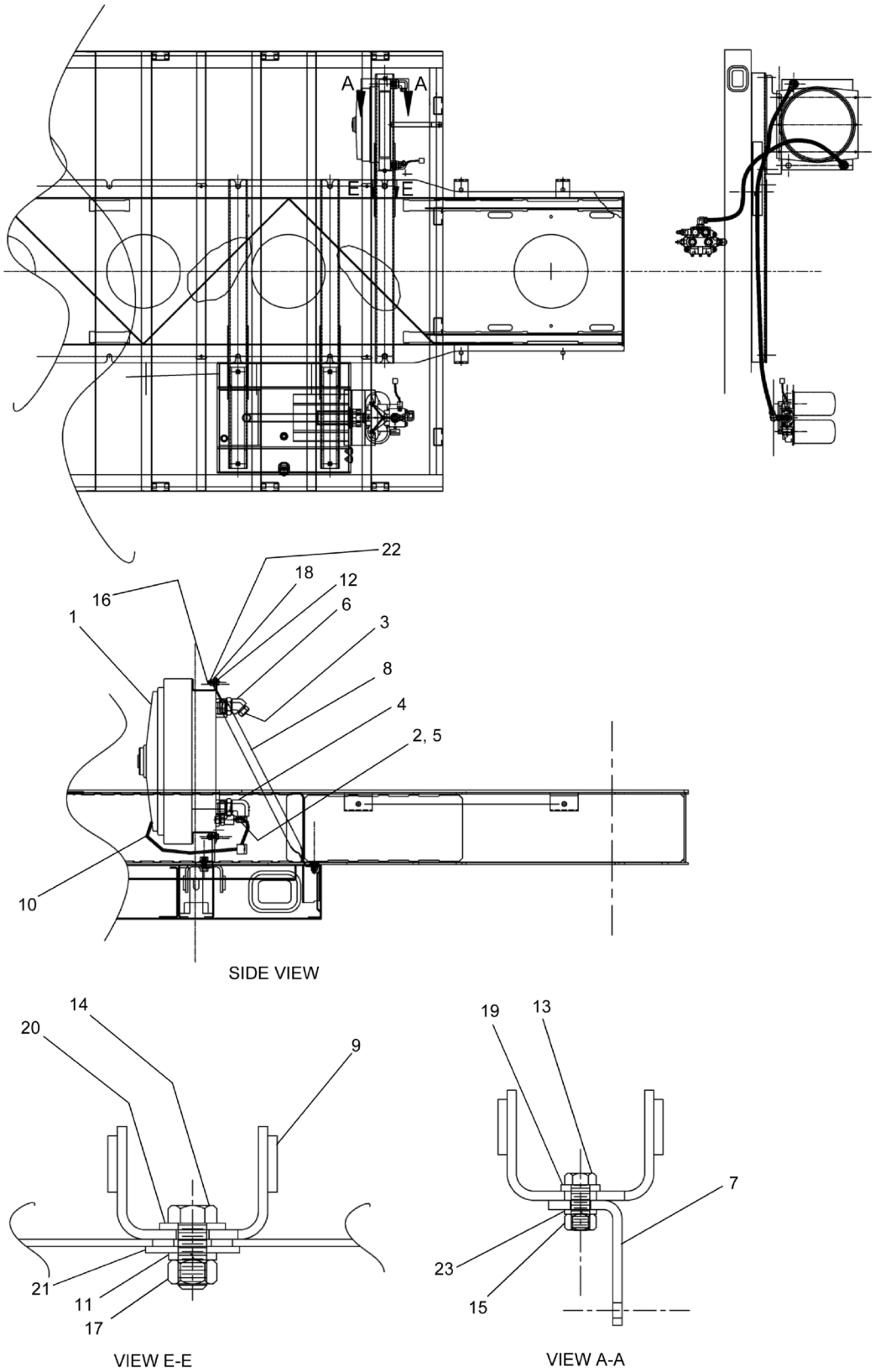

WHEN ORDERING PARTS, SPECIFY MODEL NUMBER, SERIAL NUMBER AND DESCRIPTION OF PARTS REQUIRED

REF	PART NO.	DESCRIPTION	QTY
	T119080 (Rev. A)	*Oil Cooler INSTL, Street Side*	
1	501-05021	Oil Cooler, 64K 12V Fan	1
2	502-41013	Hose, Cooler Return	1
3	T119081	Hose ASSY Main Valve S.S.	1
4	514-59023	Elbow 90 DEG, MOFS - 12 / MORB -16	1
5	514-67004	Elbow Swivel 90°	1
6	515-07003	Fitting, 45 DEG, FGFF-6802-12-16	1
7	785-02123	Angle, Cooler	1
8	785-02124	Angle, Bracket, Cooler	1
9	875-90370.3	MTG Bracket, HYD. RES.	1
10	400-25222	Wiring Harness, Oil Cooler	1
11	W07-750X000-20	WSH, LCK, MED SPLT 0.75, ST Z	2
12	SHF-312CA00-25	SCR, HHCS FT 0.312-18X1.00, ST Z G5	6
13	SHF-500CA25-25	SCR, HHCS FT 0.50-13 X 1.25, ST Z G5	2
14	S01-750CA75-Y8	SCR, HHCS 0.75-10 X 1.75, ST Z G8	2
15	N04-500C000-25	Nut, HEX 0.50 - 13, ST Z GR5	2
16	N04-312C000-25	Nut, HEX 0.3125-18, ST SQC G5	6
17	N04-750C000-Y8	Nut, HEX 0.75-10, ST YZ GR8	2
18	WAN-31NX000-20	WSH, FL TYPA-NRW 0.3125, ST SQC	6
19	WAN-50NX000-20	WSH, FL TYPA-NRW 0.50, ST Z	2
20	WAH-75NX000-Y2	WSH, FL HRD A-NRW 0.75, ST YZ	2
21	WFD-750XB00-E8	WSH FNDR 0.75 X 2.00, SS18-8	2
22	W07-312X000-20	WSH, LCK, MED SPLT 0.3125, ST SQC	6
23	W07-500X000-20	WSH, LCK, MED SPLT 0.50, ST Z	2

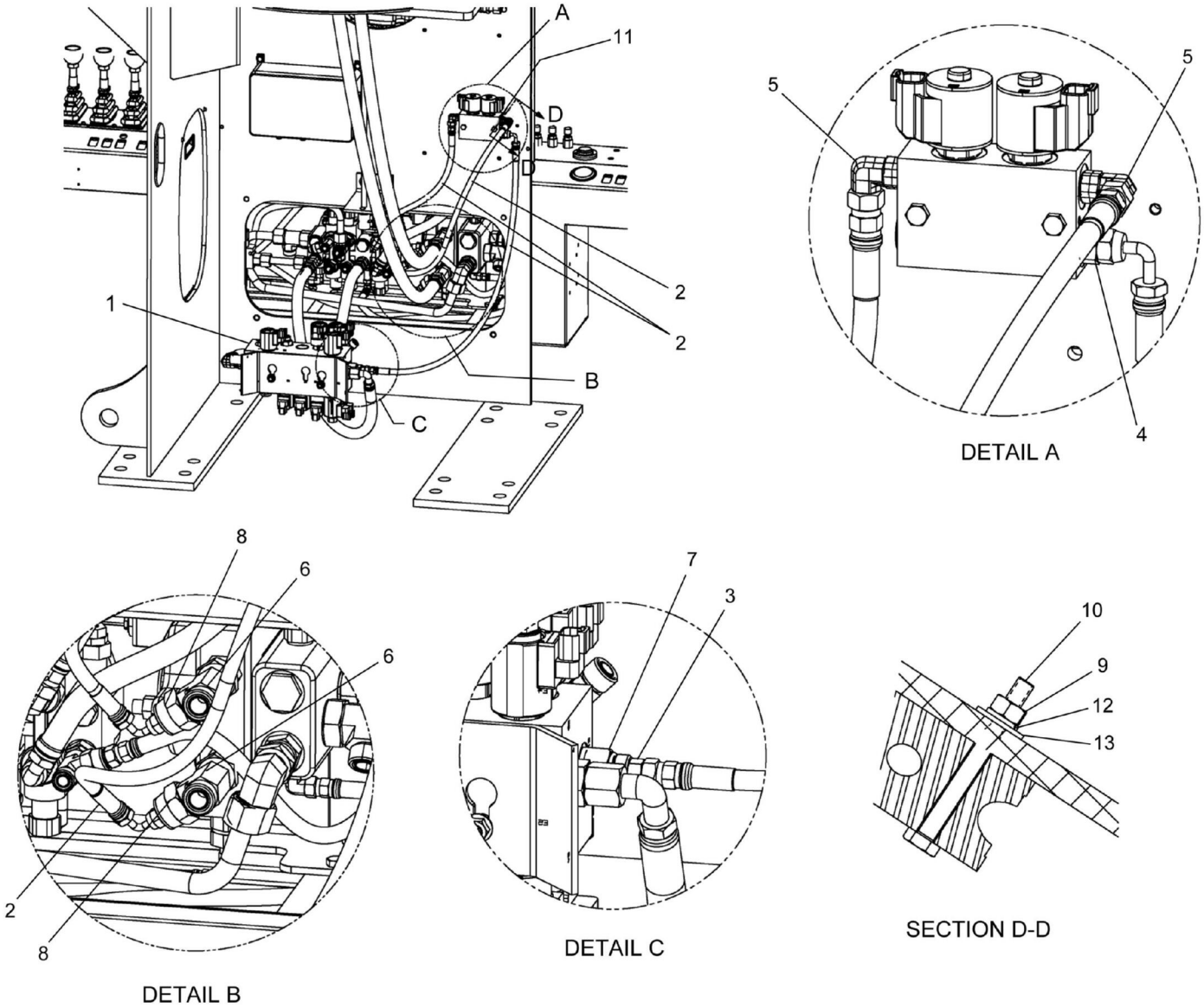

WHEN ORDERING PARTS, SPECIFY MODEL NUMBER, SERIAL NUMBER AND DESCRIPTION OF PARTS REQUIRED

REF	PART NO.	DESCRIPTION	QTY
	500-01831 (Rev. D)	*Inching Valve Option*	
1	**500-01837-01**	HYD Installation, Mainframe-Console (see page 259)	1
2	502-11340	Hose Assembly, Inch Valve	3
3	513-20017	Adapter, MOFS-4/MORB-4	1
4	513-20019	Adapter, MOFS-4/MORB-6	1
5	514_52005	Elbow, 90, MOFS-4/MORB-6	2
6	516-87006	Tee -12	2
7	517-00102	Reducer 10 ORB X 4 ORB	1
8	519-70034	Adapter, MOFS-4/FOFS-12SW	2
9	N04-250C000-25	Nut, HEX 0.25-20, ST SQC G5	2
10	S01-250CB50-25	Screw, HHCS 0.25-20 X 2.50, ST SQC G5	2
11	**T125073**	Valve, Inching (see page 282)	1
12	W07-250X000-20	Washer, LCK, MED SPLT 0.25, ST SQC	6
13	WBR-25RX734-20	Washer, FL TYPB-REG 0.25, ST SQC	2

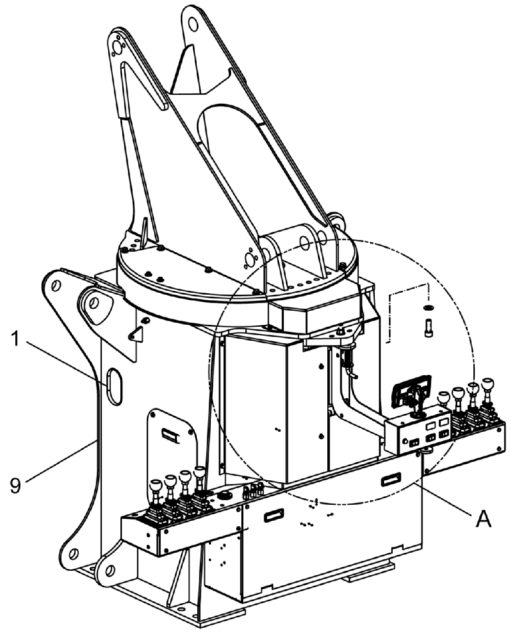

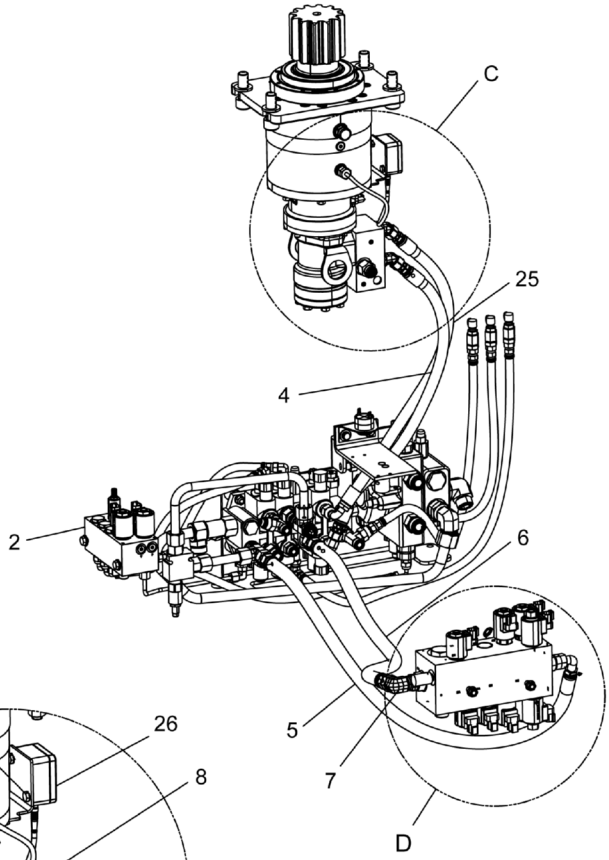

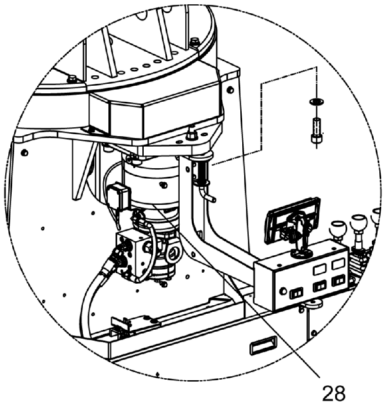

DETAIL A

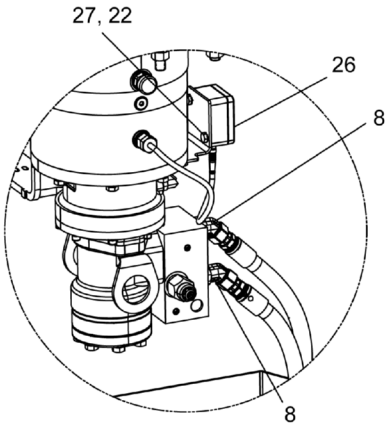

DETAIL C

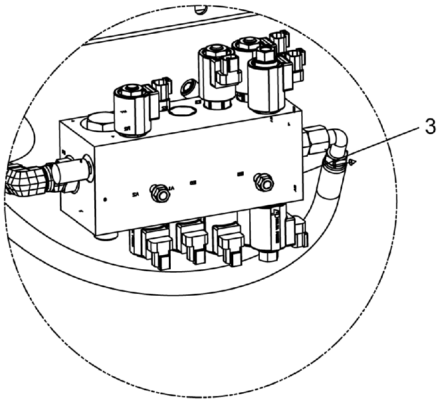

DETAIL D

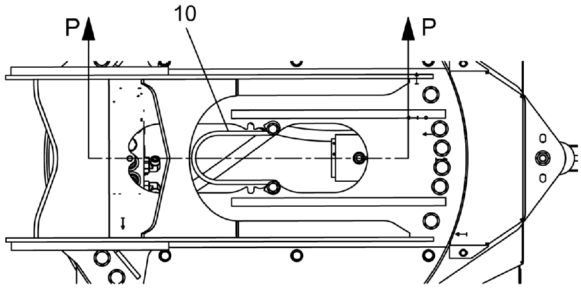

WHEN ORDERING PARTS, SPECIFY MODEL NUMBER, SERIAL NUMBER AND DESCRIPTION OF PARTS REQUIRED

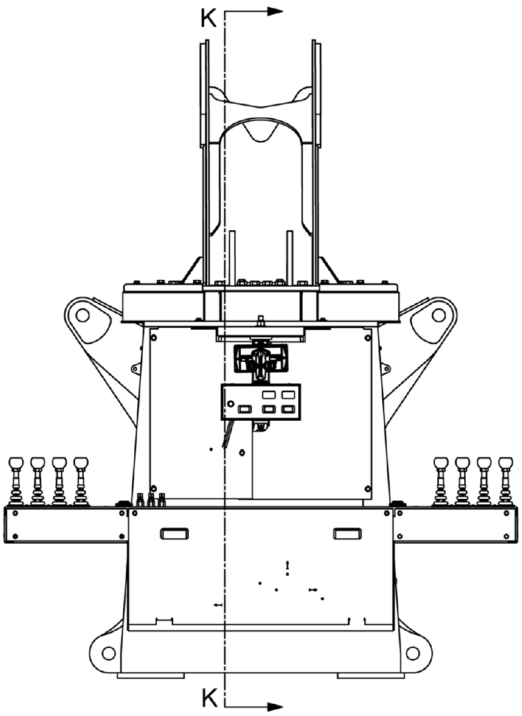

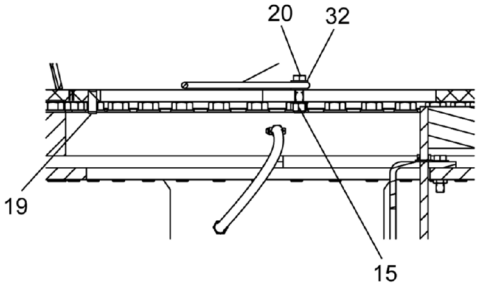

SECTION P - P

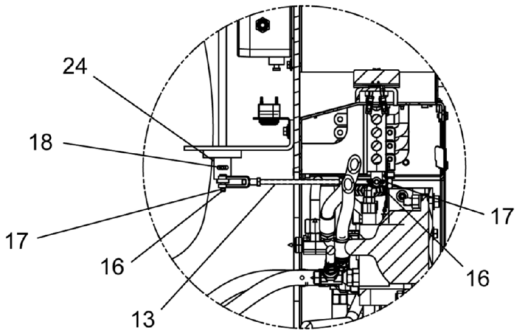

DETAIL L

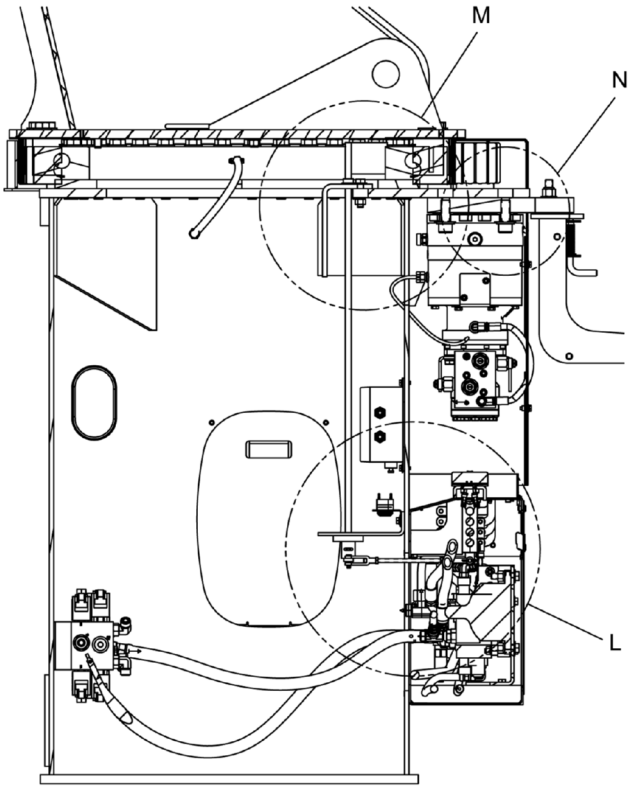

SECTION K - K

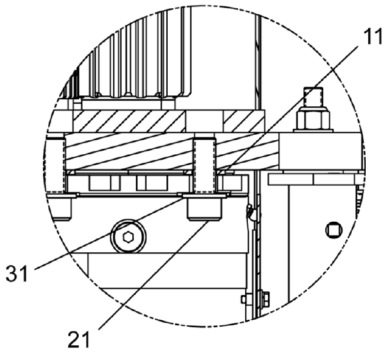

DETAIL N

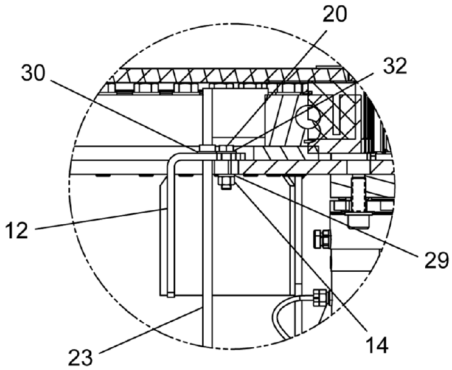

DETAIL M

WHEN ORDERING PARTS, SPECIFY MODEL NUMBER, SERIAL NUMBER AND DESCRIPTION OF PARTS REQUIRED

REF	PART NO.	DESCRIPTION	QTY
	500-01837-01 (Rev. H)	*HYD Installation, Mainframe-Console*	
1	12169-16	Flex Trim 3/8" X 18" Long	50"
2	**500-01836-01**	HYD INSTL, Console (see page 262)	1
3	**500-01844**	Valve SUBASSY, Outrigger (see page 269)	1
4	502-30779	Hose, Swing-Drive	1
5	502-35082	Hose, Outrigger Return	1
6	502-35091	Hose OR PB-Boom	1
7	514-66004	Elbow 90 M#10 OFS X F#10 OFS	1
8	515-05005	45 Elbow #8 OFS X #10 ORB	2
9	**695-00185**	Mainframe Console ASSY (see page 271)	REF
10	770-02831	Bracket, House Guide	1
11	781-00336	Boss, 1.38 X 0.813 X 0.16	4
12	789-06007	Swivel, Stop Arm	1
13	806-00245	Control Link ASSY	1
14	N04-500C000-25	Nut, HEX 0.50 - 13, ST Z GR5	2
15	NYL-500C000-25	Nut, HEX NYL - INS 0.50-13, ST Z G5	2
16	P01-312XA00-P0	Pin, Clevis 0.3125 X 1.00, STL	2
17	P02-125X750-20	Pin, Cotter 0.125 X 0.75, ST SQC	2
18	P22-188XA50-GP	Pin, Spring SLTD 0.1875 X 1.50, ST	1
19	P22-500XA50-G2	Pin, Spring SLTD 0.50 X 1.50, ST Z	1
20	S01-500CB00-25	SCR, HHCS 0.50-13X2.00, ST Z GR5	4
21	S14-750CB00-H2	SCR, SHCS 0.75 - 10 X 2.00, ST Z	4
22	SHF-250C625-25	SCR, HHCS FT 0.25-20 X 0.625, ST SQC G5	2
23	T109850	Flag WELD, Swing Stop	1
24	T124167	Swing Stop Weldment	1
25	T133371	Hose, -8, 4000, FOFS-8SW/FOFS-8SW90, 700	1
26	T145537	Wad Sensor	1
27	T145587	Washer, Lock, External Tooth, 0.25	2
28	**T146435**	Swing Drive (Omnigear) (see page 120)	1
29	W07-500X000-20	WSH, LCK, MED SPLT 0.50, ST Z	2
30	WAH-50NX000-Y2	WSH, FL HRD A-NRW 0.50, ST YZ	1
31	WAH-75NX000-Y2	WSH, FL HRD A-NRW 0.75, ST YZ	4
32	WAN-50NX000-20	WSH, FL TYPA-NRW 0.50, ST Z	8

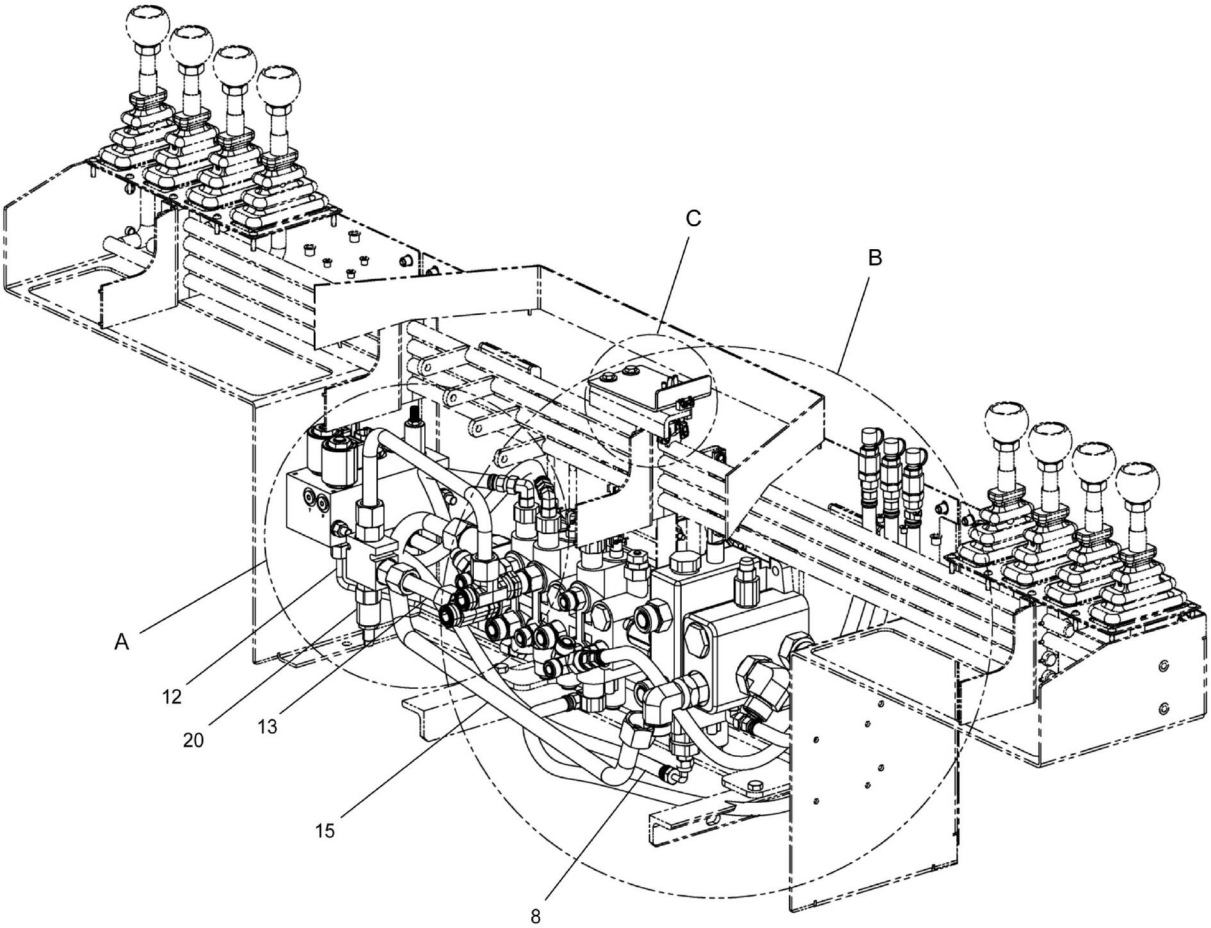

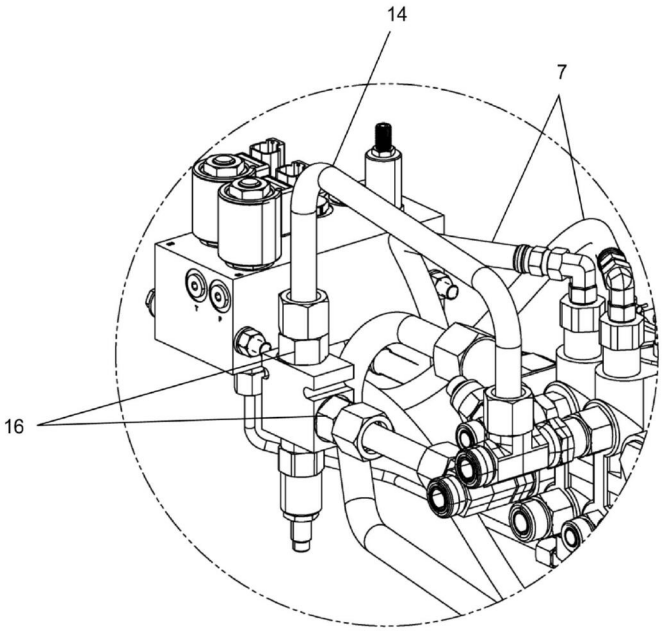

DETAIL A

WHEN ORDERING PARTS, SPECIFY MODEL NUMBER, SERIAL NUMBER AND DESCRIPTION OF PARTS REQUIRED

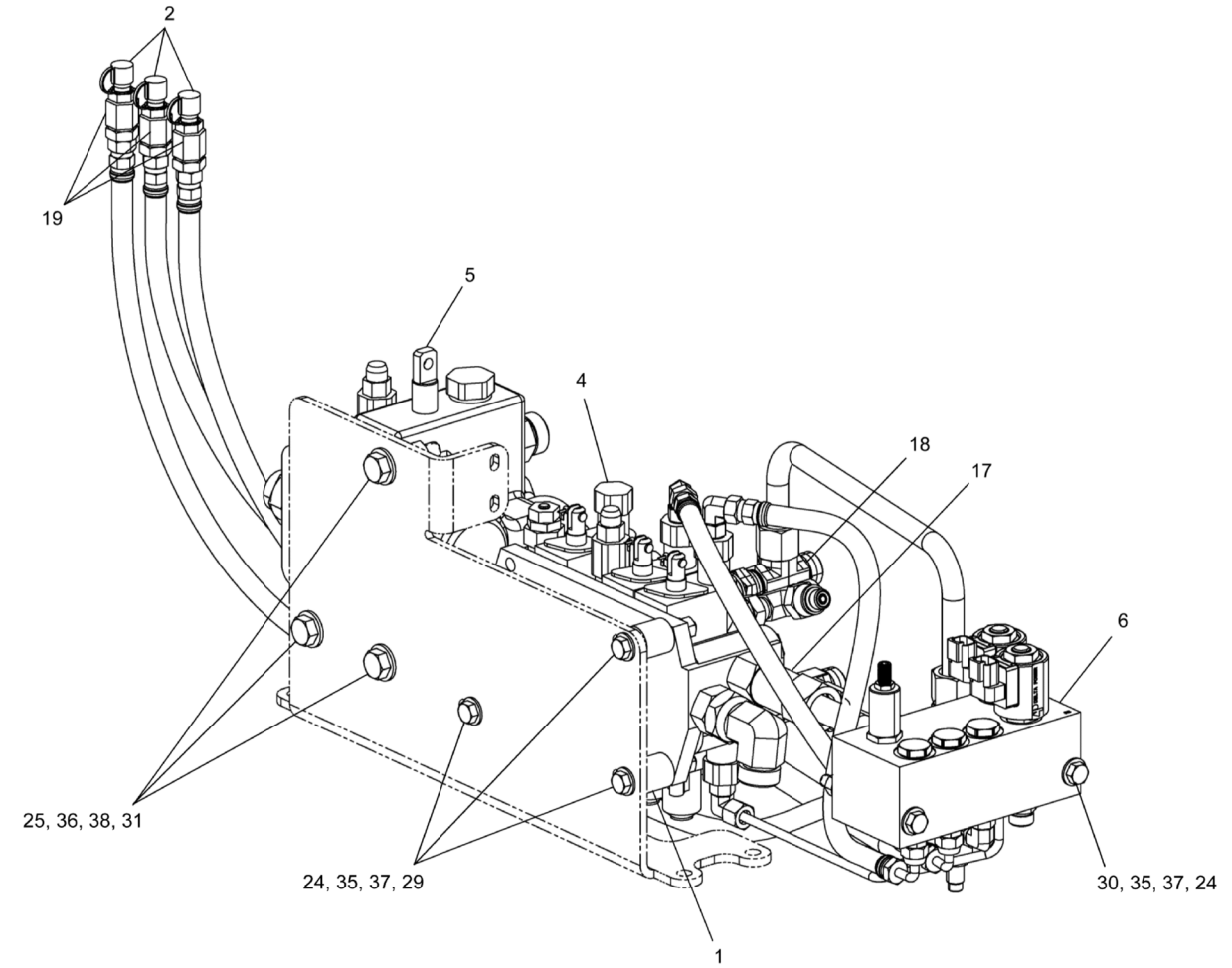

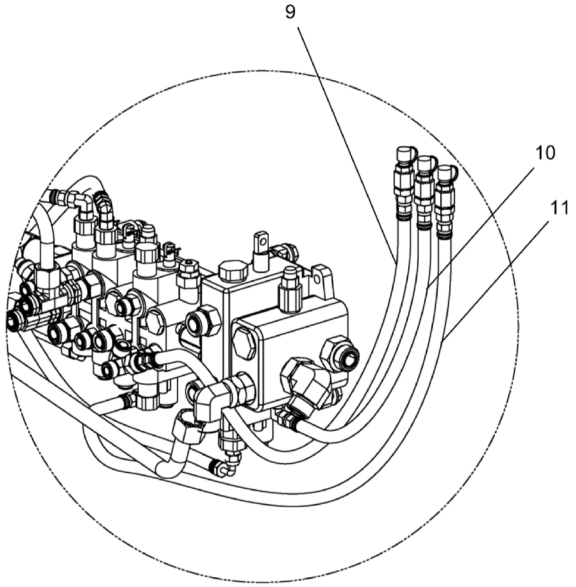

DETAIL B

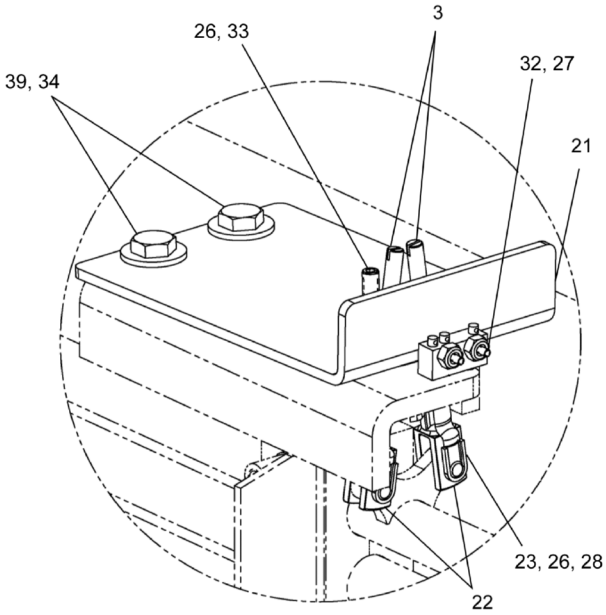

DETAIL C

WHEN ORDERING PARTS, SPECIFY MODEL NUMBER, SERIAL NUMBER AND DESCRIPTION OF PARTS REQUIRED

REF	PART NO.	DESCRIPTION	QTY
	500-01836-01 (Rev. E)	*HYD INSTL, Console*	
1	001-20057	Spacer, CYL 0.406 X 1.00 X 1.00	3
2	12019-558	Dust Cap, HQC-4	3
3	229-00028	STUD, SLTD 10-32 X 2.44	2
4	**500-01826**	Valve ASSY (see page 265)	1
5	**500-01827**	Valve SUBASSY, Winch (see page 114)	1
6	**500-01828**	Valve ASSY, RCI (see page 116)	1
7	502-11325	Hose, LMI-Boom Topping	2
8	502-11327	Hose, LMI Winch Raise Unloadng	1
9	502-11330	Hose, Swing Test Port	1
10	502-11331	Hose, Winch Test Port	1
11	502-11332	Hose, Main Valve Test Port	1
12	510-20463	Tube, PB Unload, 0.25 DIA	1
13	510-60022	Tube, Tele Relief, 0.625 DIA	1
14	510-60023	Tube, Tele Relief, 0.625 DIA	1
15	510-70847	Tube, Power Beyond	1
16	513-60012	Adapter, MOFS-10/MORB-8	2
17	513-70040	Adapter, MOFS-12/MORB-12, L	1
18	516-86002	Tee, MOFS-10/FOFS-10SW/MOFS-10	1
19	518-20013	Parker # PD 346	3
20	559-00262	Valve, Relief	1
21	789-05957	Plate, Spring Switch	1
22	809-00508	Clevis Fork, 10-32 X 0.1875	2
23	809-00509	Clevis Bracket Weldment 0.1875	2
24	N04-375C000-25	Nut, HEX 0.375-16, ST Z GR5	5
25	N04-500C000-25	Nut, HEX 0.50 - 13, ST Z GR5	3
26	N23-190F000-20	Nut, HEX, MACH 10-32, ST SQC	5
27	NYL-086C000-22	Nut, HEX NYL-INS 02-56, ST SQC G2	2
28	NYL-190F000-22	Nut, HEX NYL-INS 10-32, ST SQC G2	2
29	S01-375CB50-25	SCR, HHCS 0.375-16 X 2.50, ST SQC G5	3
30	S01-375CD00-25	SCR, HHCS 0.375-16 X 4.00, ST SQC G5	2
31	S01-500CB00-25	SCR, HHCS 0.50-13X2.00, ST Z GR5	3
32	S14-086C625-HB	SCR, SHCS 02-56 X 0.625, ST BX	2
33	S42-190F750-BX	SCR, SSS OV 10-32 X 0.75, ST BLKOX	1
34	SHF-250C750-25	SCR, HHCS, 0.25-20 X 0.75, ST SQC G5	2
35	W07-375X000-20	WSH, LCK, MED SPLT 0.375, ST Z	5
36	W07-500X000-20	WSH, LCK, MED SPLT 0.50, ST Z	3
37	WAN-37NX000-20	WSH, FL TYPA-NRW 0.375, ST Z	5
38	WAN-50NX000-20	WSH, FL TYPA-NRW 0.50, ST Z	3
39	WBR-25RX734-20	Washer, FL TYPB-REG 0.25, ST SQC	2

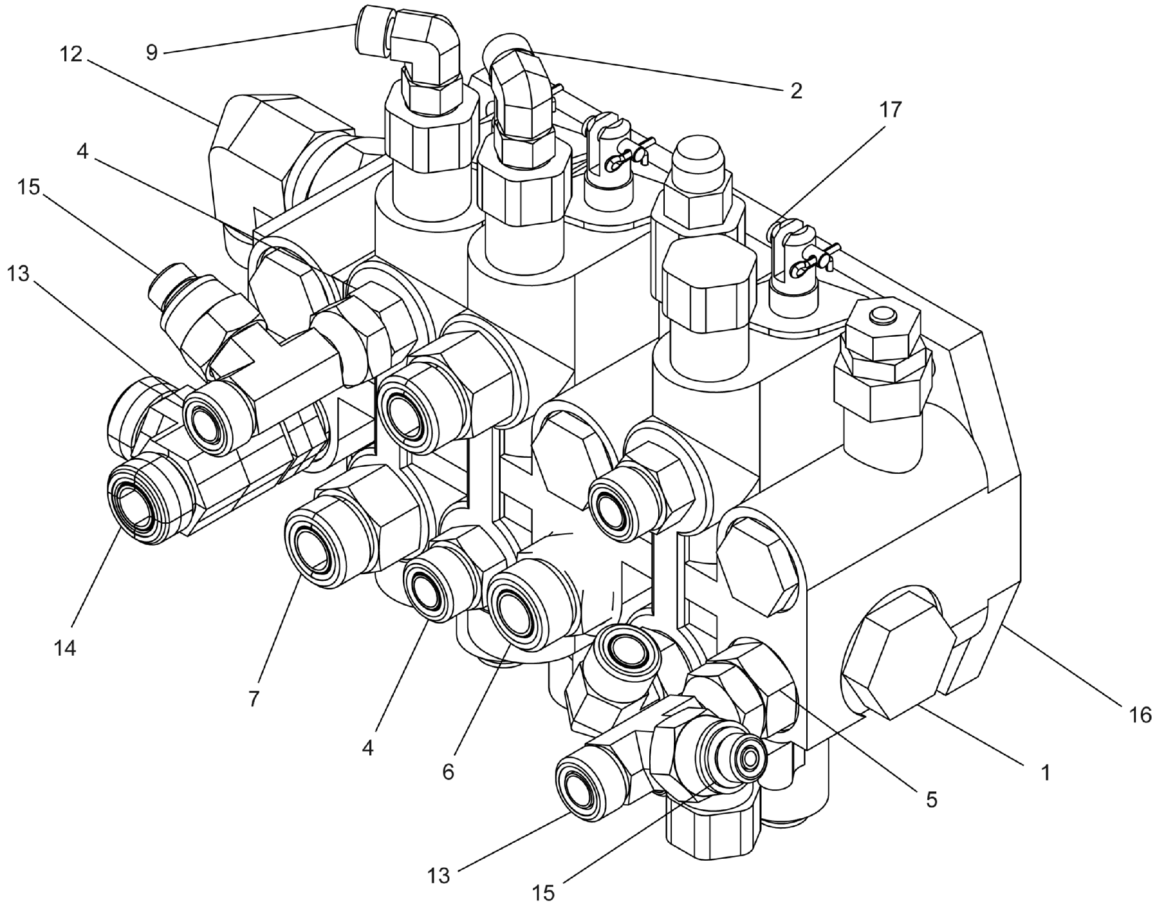

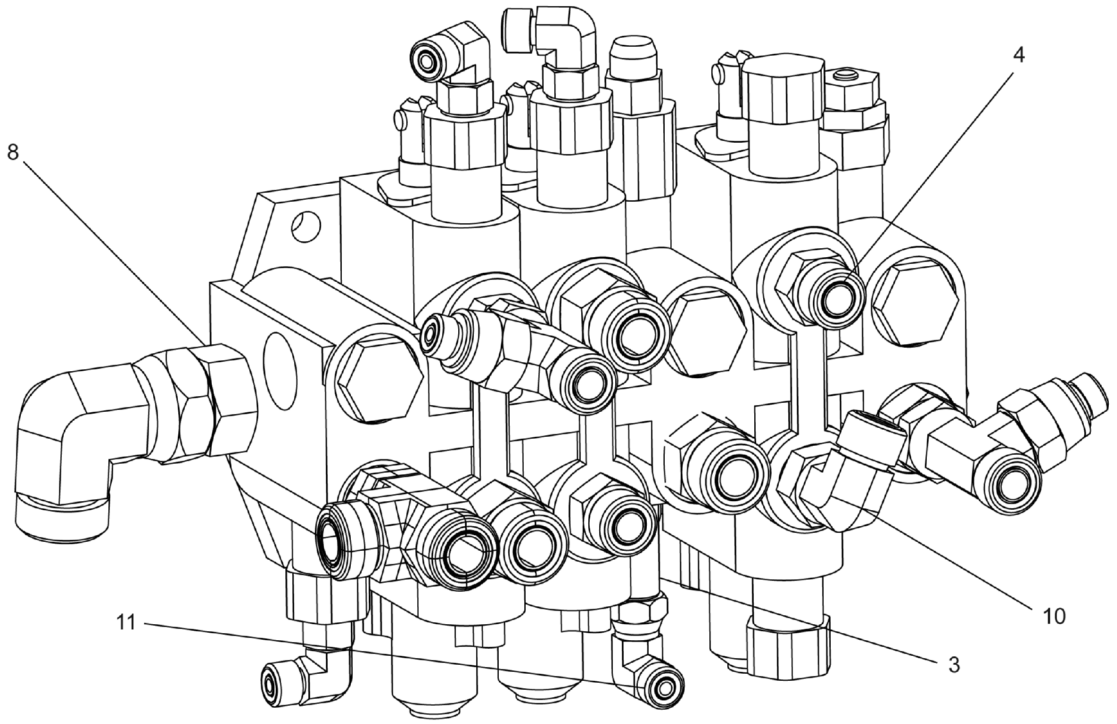

WHEN ORDERING PARTS, SPECIFY MODEL NUMBER, SERIAL NUMBER AND DESCRIPTION OF PARTS REQUIRED

REF	PART NO.	DESCRIPTION	QTY
	500-01826 (Rev. C)	*Valve ASSY*	
1	1219-485	Plug, HEX, ORB-12	1
2	224-01001	PIN, COTR .09X.5 Z (1207-3)	3
3	513-30003	Adapter, MOFS-4/MORB-4, L	1
4	513-50023	Adapter, MOFS-8/MORB-8	3
5	513-50027	Adapter, MOFS-8/MORB-10	1
6	513-60008	Adapter, MORB-10/MOFS-10	1
7	513-60012	Adapter, MOFS-10/MORB-8	2
8	513-70023	Adapter, MOFS-12/MORB-12	1
9	514-52003	Elbow 90° STD-M#4 OFS	3
10	514-55011	90° Elbow M#8 OFS X M#8 ORB	1
11	514-62002	Elbow 90º M0.250FS X F0.250FS SW	1
12	514-67004	Elbow Swivel 90°	1
13	516-85004	TEE, MOFS-8/FOFS-8SW/MOFS-8	2
14	516-86004	TEE, MOFS-10/MORB-10/MOFS-10	1
15	519-50012	Adapter, MOFS-4/FOFS-8SW	2
16	**550-00423**	Valve, Main Boom (HUSCO) (see page 267)	1
17	870-00044	OBS-PIN, Clevis .19 x .75 LG	3

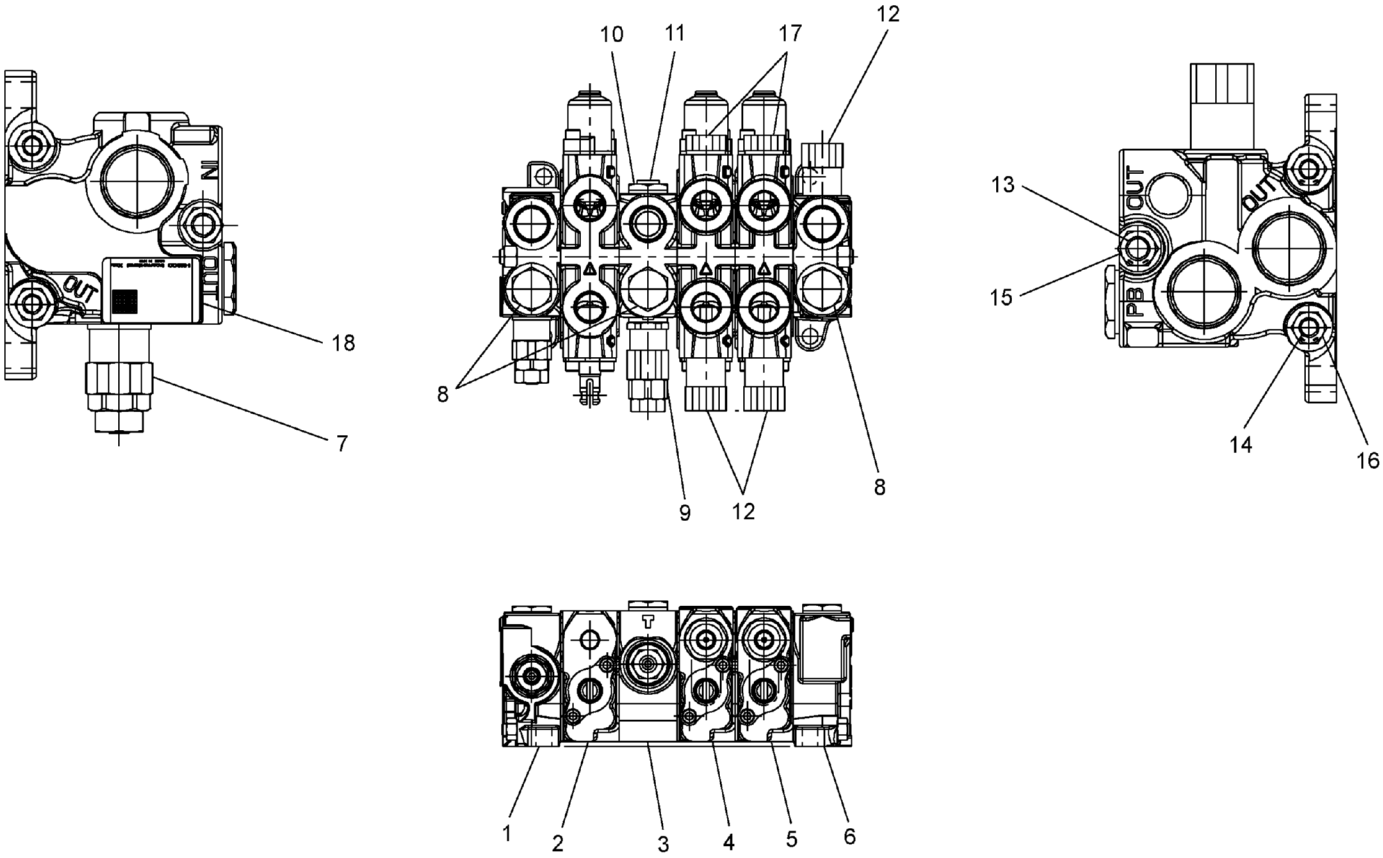

WHEN ORDERING PARTS, SPECIFY MODEL NUMBER, SERIAL NUMBER AND DESCRIPTION OF PARTS REQUIRED

REF	PART NO.	DESCRIPTION	QTY
	550-00423 (Rev. B)	*Valve, Main Boom (HUSCO)*	
1	230922	Inlet Section Assembly	1
2	230923	Spool Section Assembly	1
3	230924	Mid-Inlet Section Assembly	1
4	230925	Spool Section Assembly	1
5	230926	Spool Section Assembly	1
6	230927	Outlet Section Assembly	1
7	230928	Relief Valve Assembly	1
8	230929	Plug Assembly -SAE	3
9	230930	Relief Valve Assembly	1
10	230931	Plug Assembly -SAE	1
11	230932	Plug Assembly -SAE	1
12	230933	Anti-Void Assembly -VENTABLE	3
13	230934	Tie Rod	1
14	230935	Tie Rod	2
15	230936	Nut-Special	2
16	230937	Nut-Special	4
17	230938	Shut-Off Plug Assembly	2
18	223169	Name Plate Assembly	1

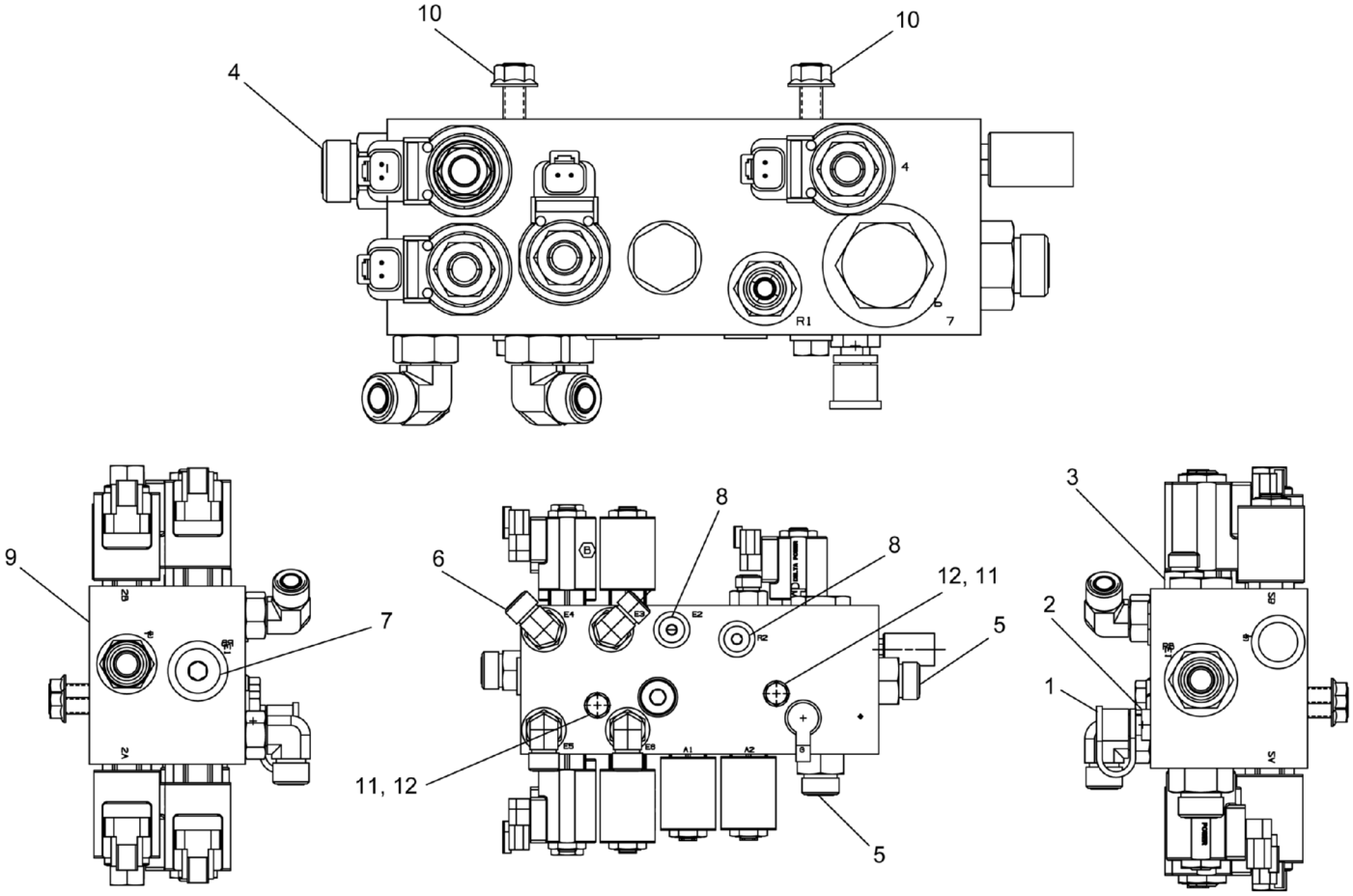

WHEN ORDERING PARTS, SPECIFY MODEL NUMBER, SERIAL NUMBER AND DESCRIPTION OF PARTS REQUIRED

REF	PART NO.	DESCRIPTION	QTY
	500-01844 (Rev. C)	*Valve SUBASSY, Outrigger*	
1	120-19558	Dust Cap	1
2	375-0400	Adapter, MORB-6/HQC-4	1
3	513-40018	Adapter, MOFS-6/MORB-8	1
4	513-60008	Adapter, MORB-10/MOFS-10	1
5	513-60015	Adapter, MOFS-10/MORB-12	2
6	514-55011	90° Elbow M#8 OFS X M#8 ORB	4
7	517-30002	Plug, HEX HEAD 0.625	1
8	517-30003	Port Plug M6 ORB	2
9	551-10148	Valve, Outrigger	1
10	NFS-375C000-25	Nut, HEX, FLG, SER.375-16, ST SQC G5	2
11	S01-375CD50-25	SCR, HHCS 0.375-16 X 4.50, ST SQC G5	2
12	W07-375X000-20	WSH, LCK, MED SPLT 0.375, ST Z	2

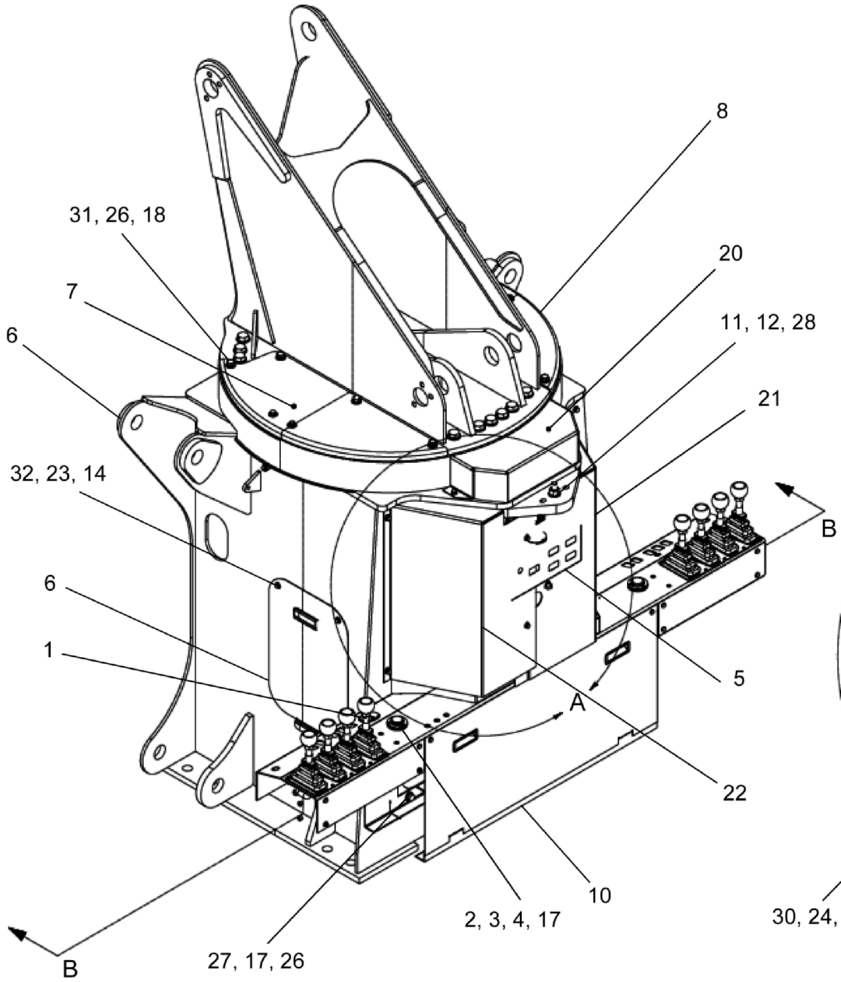

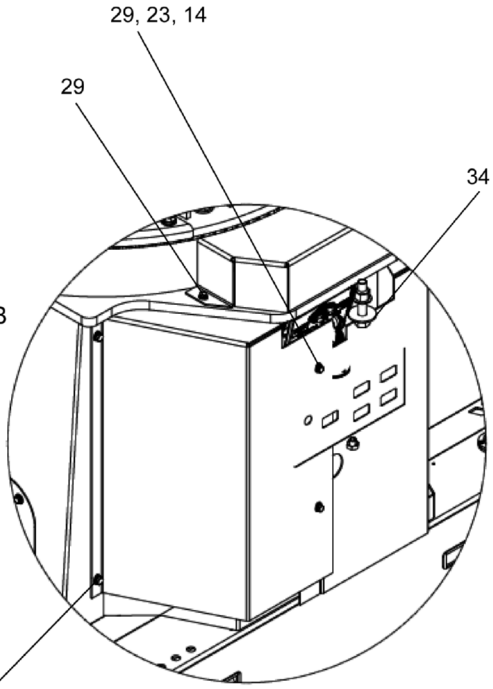

DETAIL A

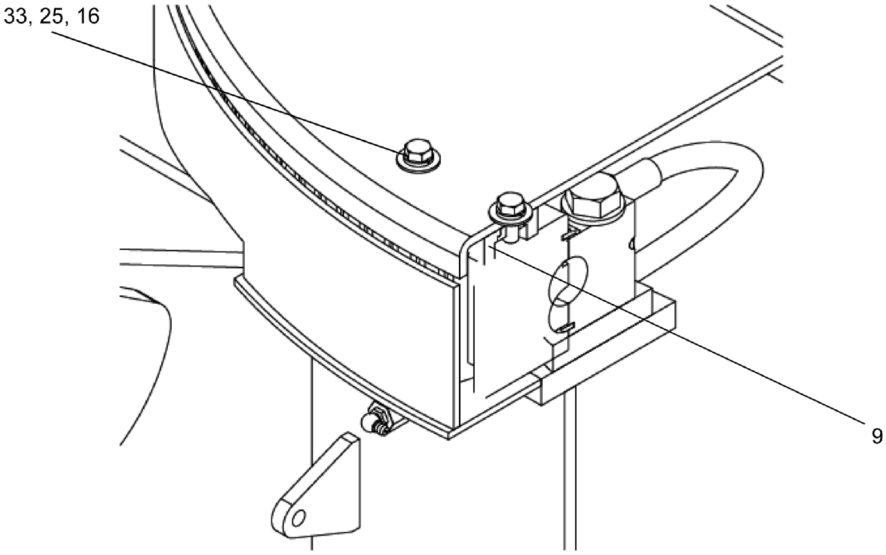

SECTION B-B

WHEN ORDERING PARTS, SPECIFY MODEL NUMBER, SERIAL NUMBER AND DESCRIPTION OF PARTS REQUIRED

REF	PART NO.	DESCRIPTION	QTY
	695-00185 (Rev. F)	*Mainframe Console ASSY*	
1	1245-162	Meter, Hour	1
2	209-00831	BRKT, Bubble Level Mounting	2
3	209-00832	Bubble Level	2
4	263-00044	Gasket-Level Mounting	2
5	**695-10021**	Switch Box ASSY, Outriggers (see page 273)	1
6	**700-01000**	Mainframe - Turret ASSY (see page 278)	1
7	719-00478	Cover, Bearing - RH	1
8	719-00479	Cover, Bearing - LH	1
9	729-02235	Wear Pad, 6.75 X 1.75 X 0.75	2
10	800-50058	Control Console ASSY	1
11	NYL-625C000-25	Nut, HEX NYL-INS 0.625-11, ST SQC G5	1
12	S01-625CC25-Y8	SCR, HHCS 0.625-11X3.25, ST YZ G8	1
13*	S16-164C750-20	SCR, FHSHCS 08-32X0.75, ST Z	6
14	SHF-250C750-25	SCR, HHCS, 0.25-20 X 0.75, ST SQC G5	8
15	SHF-312C750-25	SCR, HHCS FT 0.312-18 X 0.75, ST SQC G5	4
16	SHF-375C875-25	SCR, HHCS FT 0.375-16X0.875, STZG5	4
17	SHF-500C750-25	SCR, HHCS FT 0.50-13X0.75, ST Z G5	4
18	SHF-500CA00-25	SCR, HHCS FT 0.50-13X1.00, ST Z G5	8
19*	T110469	ASSY, Mainframe Access CVR	2
20	T126910	Cover, Pinion	1
21	T126911	Cover ASSY, Swing Motor	1
22	T126913	Cover, Swing Motor	1
23	W07-250X000-20	Washer, LCK, MED SPLT 0.25, ST SQC	8
24	W07-312X000-20	WSH, LCK, MED SPLT 0.3125, ST SQC	4
25	W07-375X000-20	WSH, LCK, MED SPLT 0.375, ST Z	4
26	W07-500X000-20	WSH, LCK, MED SPLT 0.50, ST Z	12
27	WAH-50NX000-Y2	WSH, FL HRD A-NRW 0.50, ST YZ	4
28	WAH-62NX000-Y2	WSH, FL HRD A-NRW 0.625, ST YZ	1
29	WAN-25NX000-20	WSH, FL TYPA-NRW 0.25, ST Z	4
30	WAN-31NX000-20	WSH, FL TYPA-NRW 0.3125, ST SQC	4
31	WAN-50NX000-20	WSH, FL TYPA-NRW 0.50, ST Z	8
32	WBR-25RX734-20	Washer, FL TYPB-REG 0.25, ST SQC	4
33	WBR-37RXA00-20	WSH, FL TYPB-REG 0.375, ST Z	4
34	WFT-625XB00-20	WSH, FNDR 0.625X2.00X0.125, ST Z	1

* ITEM NOT SHOWN IN ILLUSTRATION

WHEN ORDERING PARTS, SPECIFY MODEL NUMBER, SERIAL NUMBER AND DESCRIPTION OF PARTS REQUIRED

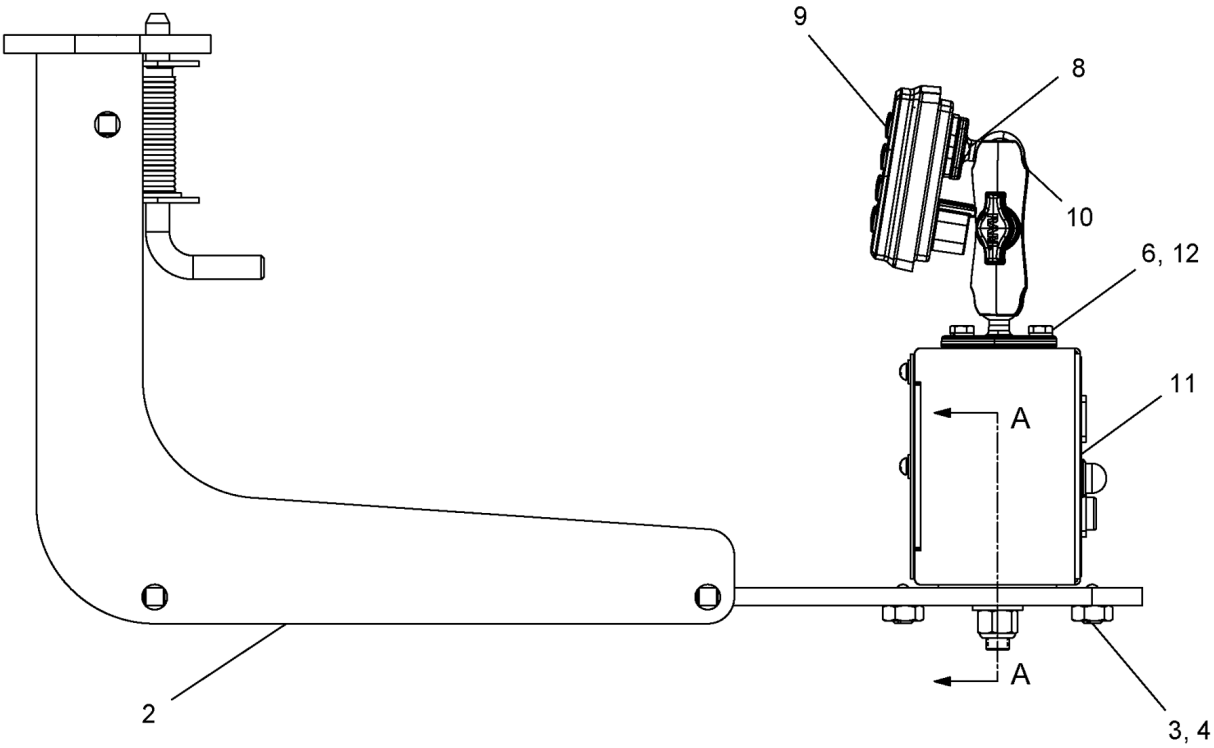

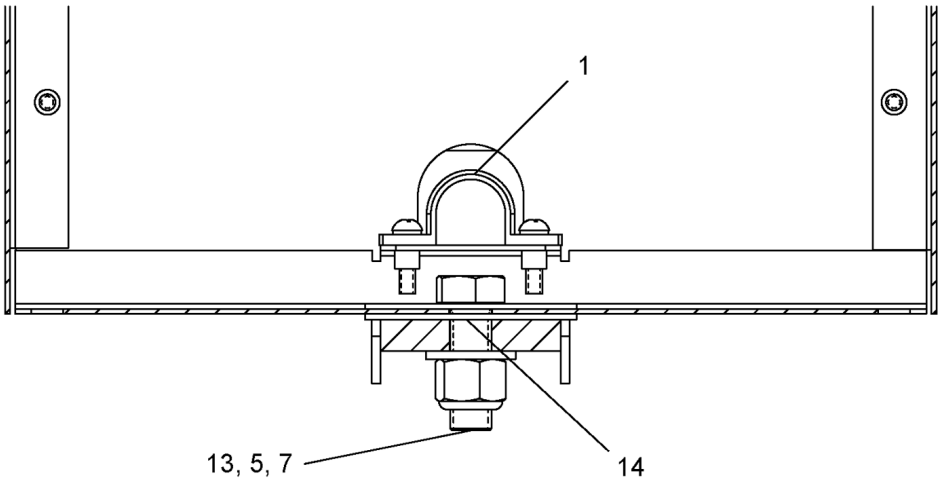

SECTION A - A

WHEN ORDERING PARTS, SPECIFY MODEL NUMBER, SERIAL NUMBER AND DESCRIPTION OF PARTS REQUIRED

REF	PART NO.	DESCRIPTION	QTY
	695-10021 (Rev. C)	*Switch Box ASSY, Outriggers*	
1	201-00264	Strap, Rigid Plastic	1
2	770-02822	Swing ARM Weldment	1
3	870-00173-5	Ball, Spring Plunger	2
4	N05-500C000-25	Nut, HEX Jam 0.50-13, ST Z GR5	2
5	NYL-500C000-25	Nut, HEX NYL - INS 0.50-13, ST Z G5	1
6	SHF-250C625-25	SCR, HHCS FT 0.25-20 X 0.625, ST SQC G5	3
7	SHF-500CA50-25	SCR, HHCS FT 0.50-13 X 1.50, ST SQC G5	1
8	SL5-164C500-20	SCR, CR RND MS 8-32X0.500, ST Z	2
9	**695-10021-Display**	Display, Greer Insight (see page 275)	1
10	T119215	Ram Mount, Greer Insight Display	1
11	**T122074**	ASSY, Outrigger Box (see page 276)	1
12	W07-250X000-20	Washer, LCK, MED SPLT 0.25, ST SQC	3
13	WAN-50NX000-20	WSH, FL TYPA-NRW 0.50, ST Z	1
14	WFD-500XB50-20	WSH, FNDR 0.50X2.50, ST Z	2

REF	PART NO.	DESCRIPTION	QTY
	695-10021-Display (Rev. 00)	*Display, Greer Insight*	
1	T117745	Display, Greer Insight	1

WHEN ORDERING PARTS, SPECIFY MODEL NUMBER, SERIAL NUMBER AND DESCRIPTION OF PARTS REQUIRED

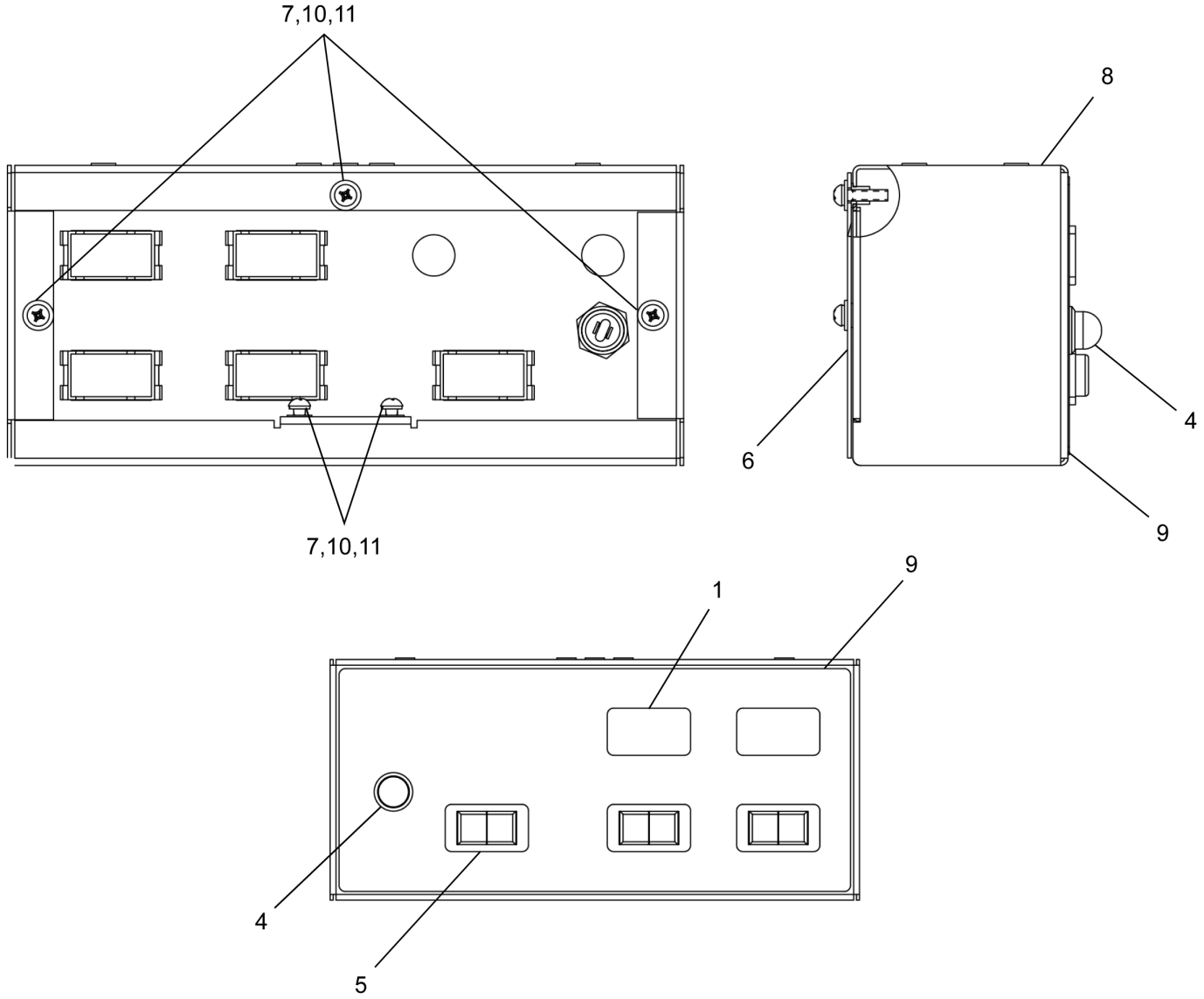

WHEN ORDERING PARTS, SPECIFY MODEL NUMBER, SERIAL NUMBER AND DESCRIPTION OF PARTS REQUIRED

REF	PART NO.	DESCRIPTION	QTY
	T122074 (Rev. C)	*ASSY, Outrigger Box*	
1	1223-1006	Plug	2
2*	1223-1020	Socket	1
3*	1223-1021	Lamp 12 V	1
4	1223-1022	Lens Red	1
5	1223-1051	SW Rocker DPDT	3
6	402-00047	Cover, Switch Box, Outrigger	1
7	SL5-190C750-20	SCR, CREC RND MS 10-24X0.75,ST Z	5
8	**T121958**	Outrigger Switch Box Assembly (see page 81)	1
9	T132436	Decal, Outrigger Controls (A-Frame)	1
10	W07-190X000-20	WSH, LCK, MED SPLT 10, ST Z	5
11	WAR-190X000-22	WSH, FL TYPA-REG 10, ST Z	3

* ITEM NOT SHOWN IN ILLUSTRATION

WHEN ORDERING PARTS, SPECIFY MODEL NUMBER, SERIAL NUMBER AND DESCRIPTION OF PARTS REQUIRED

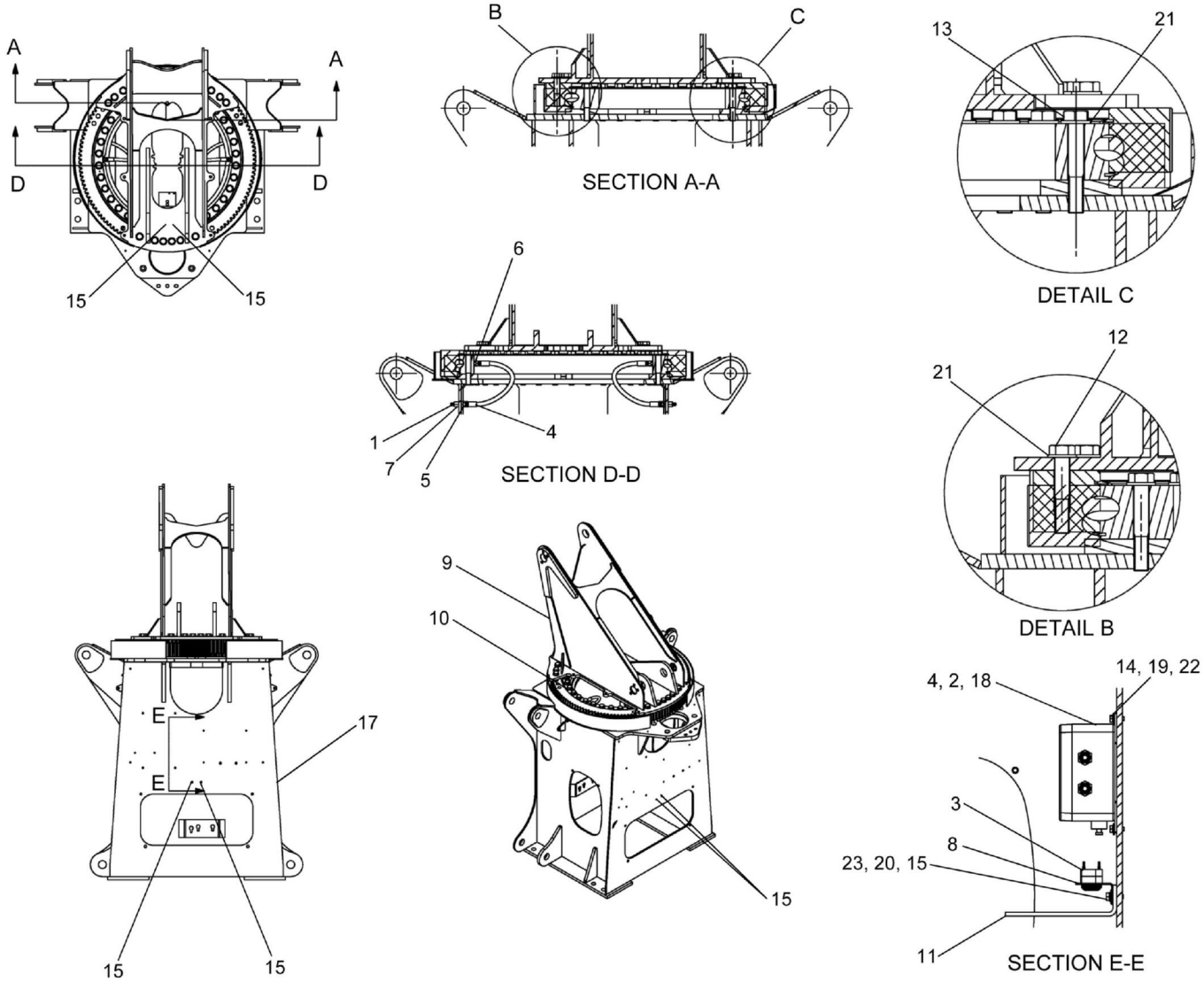

WHEN ORDERING PARTS, SPECIFY MODEL NUMBER, SERIAL NUMBER AND DESCRIPTION OF PARTS REQUIRED

REF	PART NO.	DESCRIPTION	QTY
	700-01000 (Rev. E)	*Mainframe - Turret ASSY*	
1	1213-06	Grease FTG, ZERK, 0.125NPT 90°	2
2	400-16139	ELEC Cable, Greer WAD 32' Long	1
3	450-0006	Alarm	1
4	502-00191	Grease Line Hose, BRG	2
5	511-21001	Jam Nut (TMPKNS 306-04)	2
6	513-20029	STR CONN M#4 OFS X M#4 ORB	2
7	518-20001	CONN BH F 0.125 NPT X M 0.25 JIC	2
8	709-6827	Bracket	1
9	712-00281	Turret Weldment	1
10	**700-01000-Bearing Assembly**	Bearing, Swing (see page 280)	1
11	785-01678	Support Angle, Swing Stop	1
12	S01-750CD00-Y8	SCR, HHCS 0.75-10X4.00, ST YZ GR8	20
13	S01-750CD50-Y8	SCR, HHCS 0.75-10X4.50, ST YZ GR8	36
14	SHF-250C750-25	SCR, HHCS, 0.25-20 X 0.75, ST SQC G5	4
15	SHF-312C875-25	SCR, HHCS FT 0.312-18X0.875, STZG5	2
16*	T117809	Harness, RCI Power	1
17	T122785	Mainframe Weldment	1
18	**700-01000-Computer**	Computer, Greer A450858 (see page 281)	1
19	W07-250X000-20	Washer, LCK, MED SPLT 0.25, ST SQC	4
20	W07-312X000-20	WSH, LCK, MED SPLT 0.3125, ST SQC	2
21	WAH-75NX000-Y2	WSH, FL HRD A-NRW 0.75, ST YZ	56
22	WBR-25RX734-20	Washer, FL TYPB-REG 0.25, ST SQC	4
23	WBR-31RX875-20	WSH, FL TYPB-REG 0.3125, ST Z	2

* ITEM NOT SHOWN IN ILLUSTRATION

WHEN ORDERING PARTS, SPECIFY MODEL NUMBER, SERIAL NUMBER AND DESCRIPTION OF PARTS REQUIRED

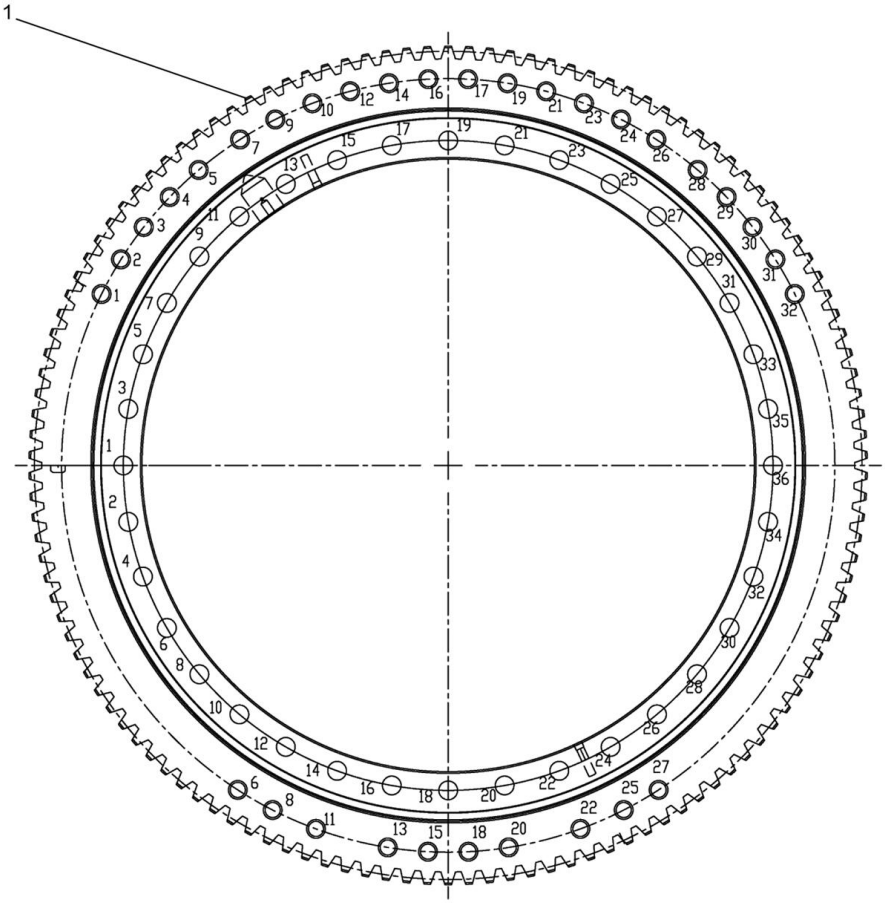

REF	PART NO.	DESCRIPTION	QTY
	700-01000-Bearing Assembly (Rev. 00)	*Bearing, Swing*	
1	716-00041	Bearing Assembly	1

WHEN ORDERING PARTS, SPECIFY MODEL NUMBER, SERIAL NUMBER AND DESCRIPTION OF PARTS REQUIRED

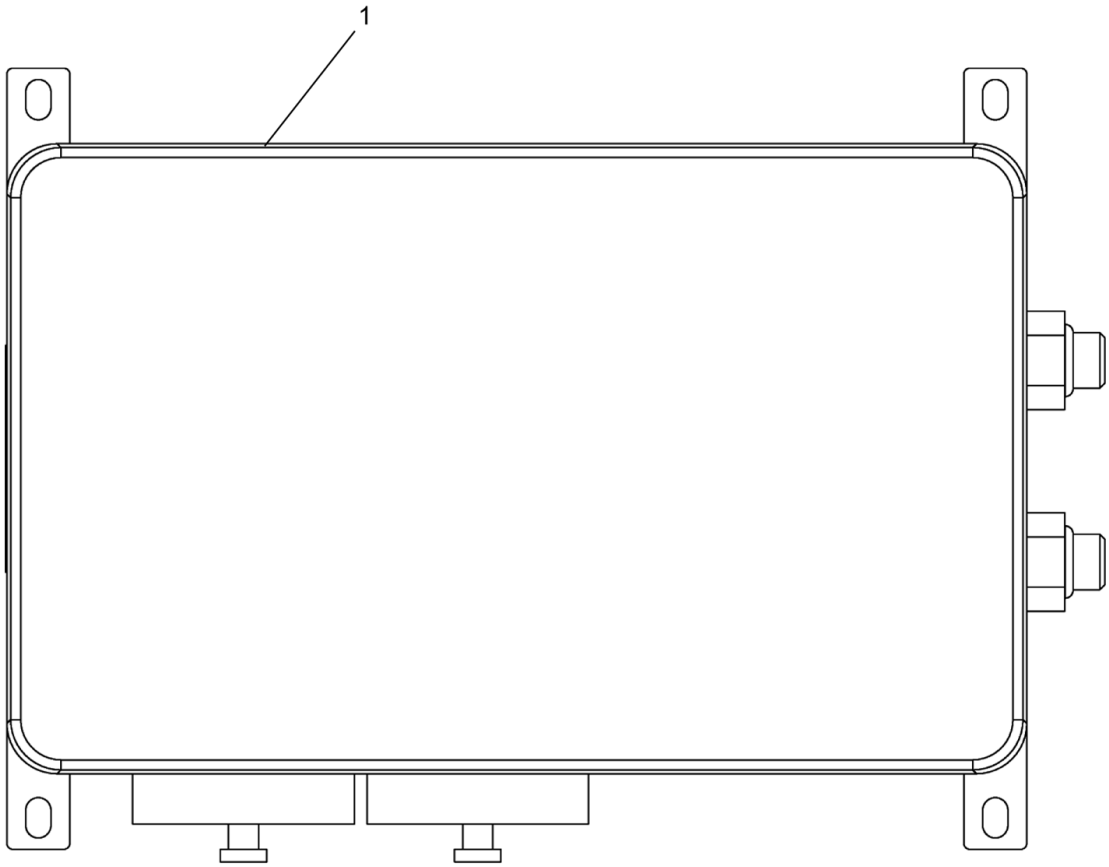

REF	PART NO.	DESCRIPTION	QTY
	700-01000-Computer (Rev. 00)	*Computer, Greer A450858*	
1	T132578	Computer, Greer A450858	1

WHEN ORDERING PARTS, SPECIFY MODEL NUMBER, SERIAL NUMBER AND DESCRIPTION OF PARTS REQUIRED

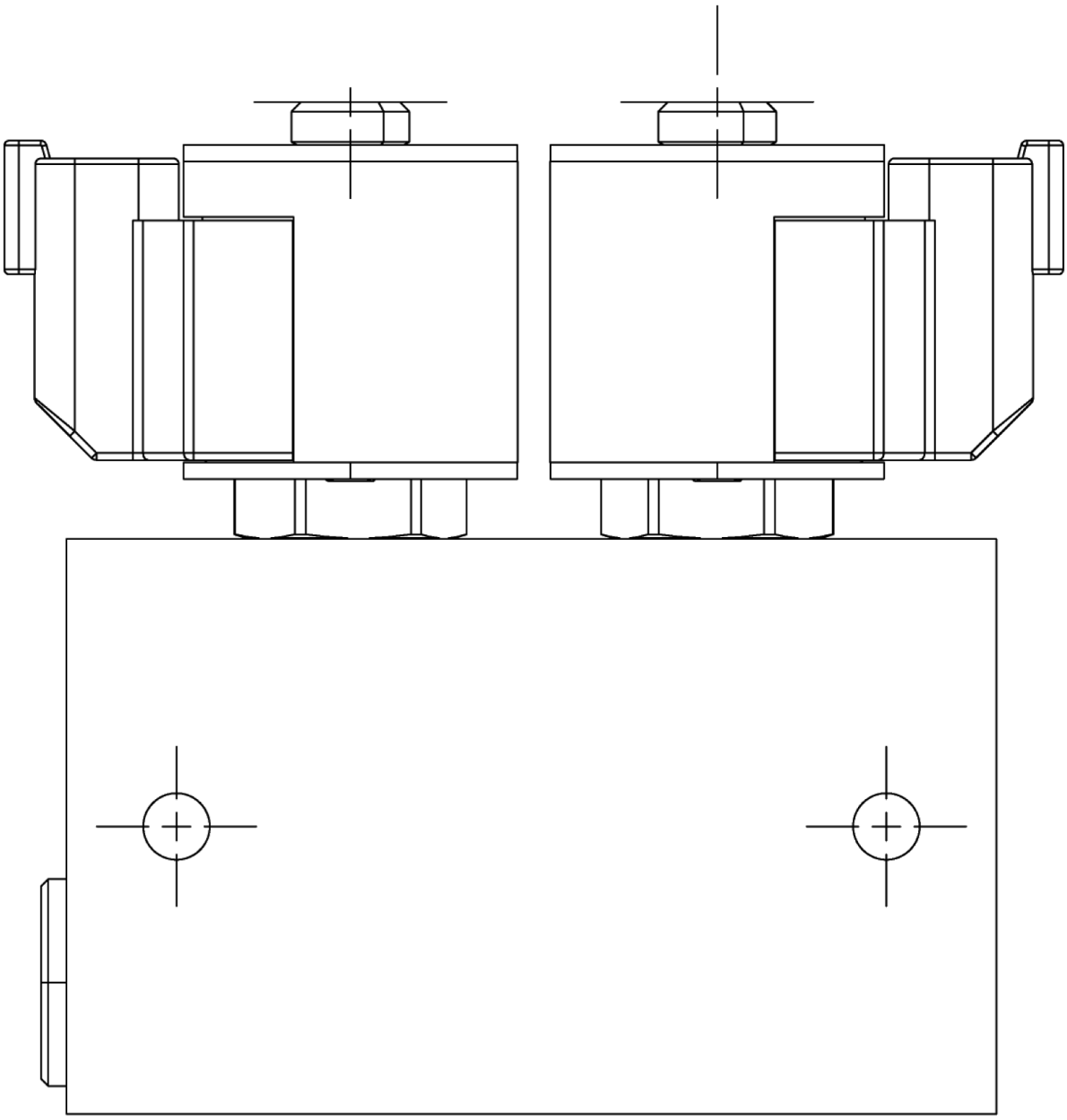

REF	PART NO.	DESCRIPTION	QTY
	T125073 (Rev. A)	*Valve, Inching*	
1	225035	2X2 Body	1
2	225036	Valve	2
3	225037	12VDC Coil ERZ	2
4	225038	SAE Port Plug	1
5	225039	Orifice Disc	1
6	225040	Orifice Disc	1

* ITEM NOT SHOWN IN ILLUSTRATION.

WHEN ORDERING PARTS, SPECIFY MODEL NUMBER, SERIAL NUMBER AND DESCRIPTION OF PARTS REQUIRED

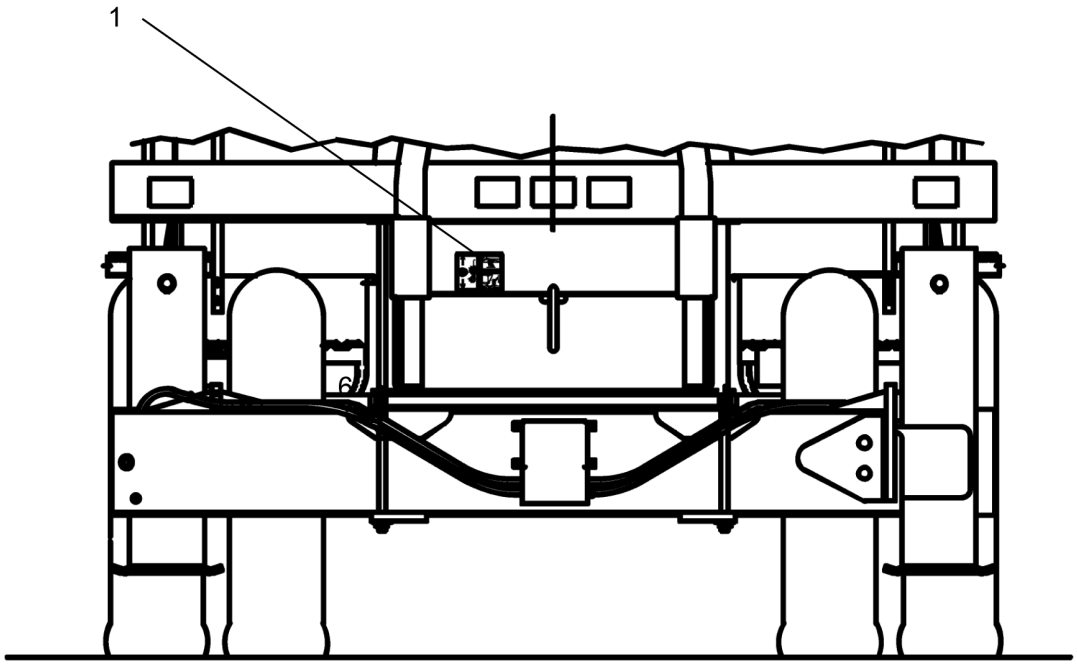

INCHING WINCH DECAL LOCATION

REF	PART NO.	DESCRIPTION	QTY
	T117808-01 (Rev. C)	*Inching Winch*	
1	T137718	Decal-Inching Winch	1

CHAPTER NO. 4

PAINT & MARKING

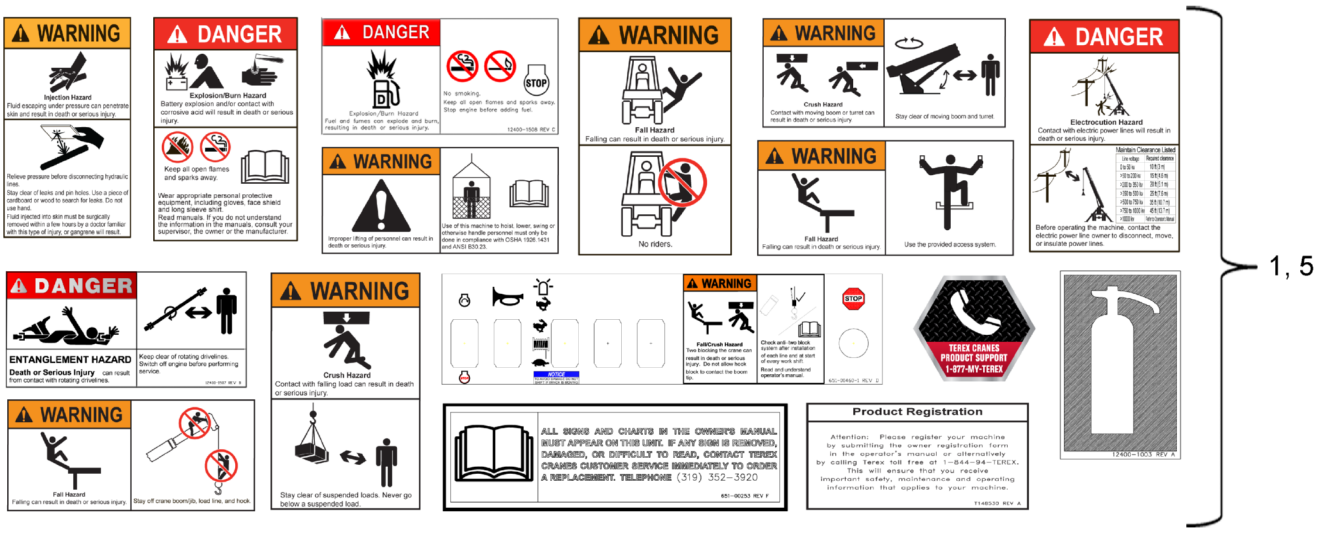

1, 5

Decal Mainframe Turret & Console

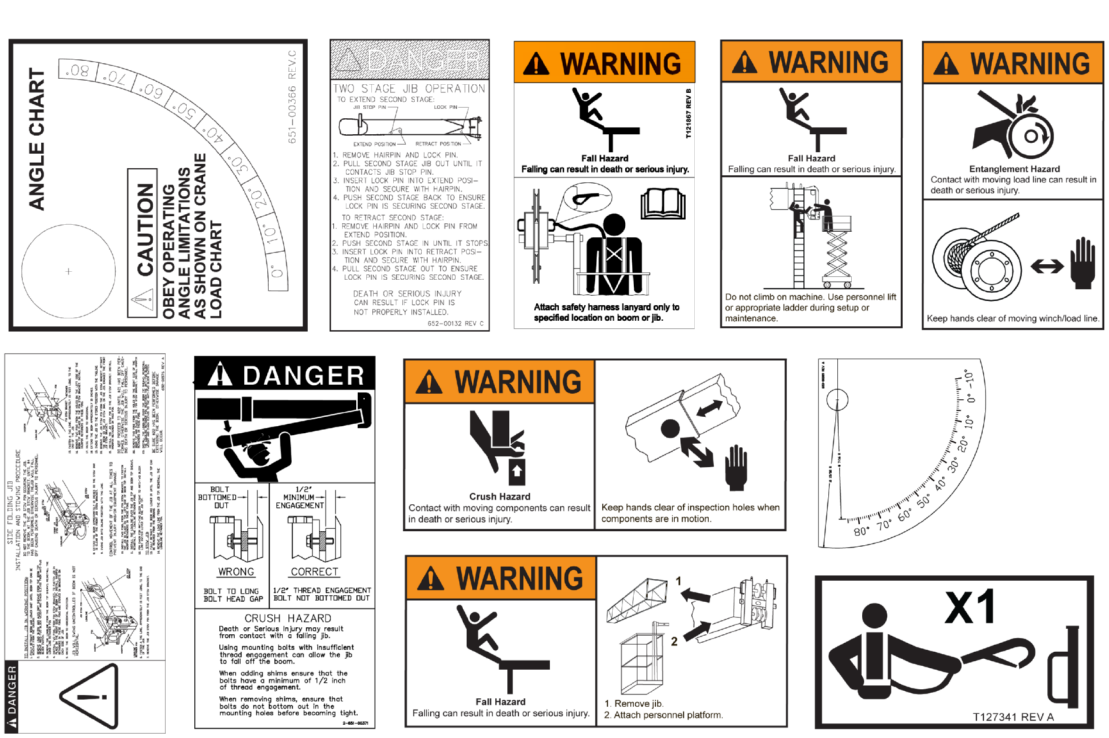

2

Decal Boom

NOTE: Above decals are indicative only. For actual decals used on a crane model, refer to their respective part nos. in its parts table & drawings therefore.

REF	PART NO.	DESCRIPTION	QTY
	28-106-DECALS (Rev. 00)	*PAINT & MARKING*	
1	**T117799-02**	Mainframe Turret & Console Decals W/ English Chart (see page 289)	1
1A	**T117799-03**	Mainframe Turret & Console Decals W/ Metric Chart (see page 292)	1
1B	**T117799-04**	Mainframe Turret & Console Decals English 360° Chart W/Front Jack (see page 295)	1
1C	**T117799-05**	Mainframe Turret & Console Decals Metric Chart Spanish (see page 298)	1
1D	**T117799-06**	Mainframe Turret & Console Decals Metric 360° Chart W/Front Jack (see page 301)	1
2	**T117806**	Decal Location Truck, Flatbed & HYS Tank (see page 304)	1
3**	**T117798**	Boom Decal Location (see page 307)	1
4**	**T105043**	Jib Decal Location (see page 310)	1
5	**T131594**	2-Man Steel Platform Manual, Decals- English (see page 311)	1
5	**T131595**	2-Man Steel Platform Manual, Decals- Metric (see page 314)	1
6**	**T108937**	Spanish Decals Kit (see page 317)	1

** NOT SHOWN IN ILLUSTRATION

WHEN ORDERING PARTS, SPECIFY MODEL NUMBER, SERIAL NUMBER AND DESCRIPTION OF PARTS REQUIRED

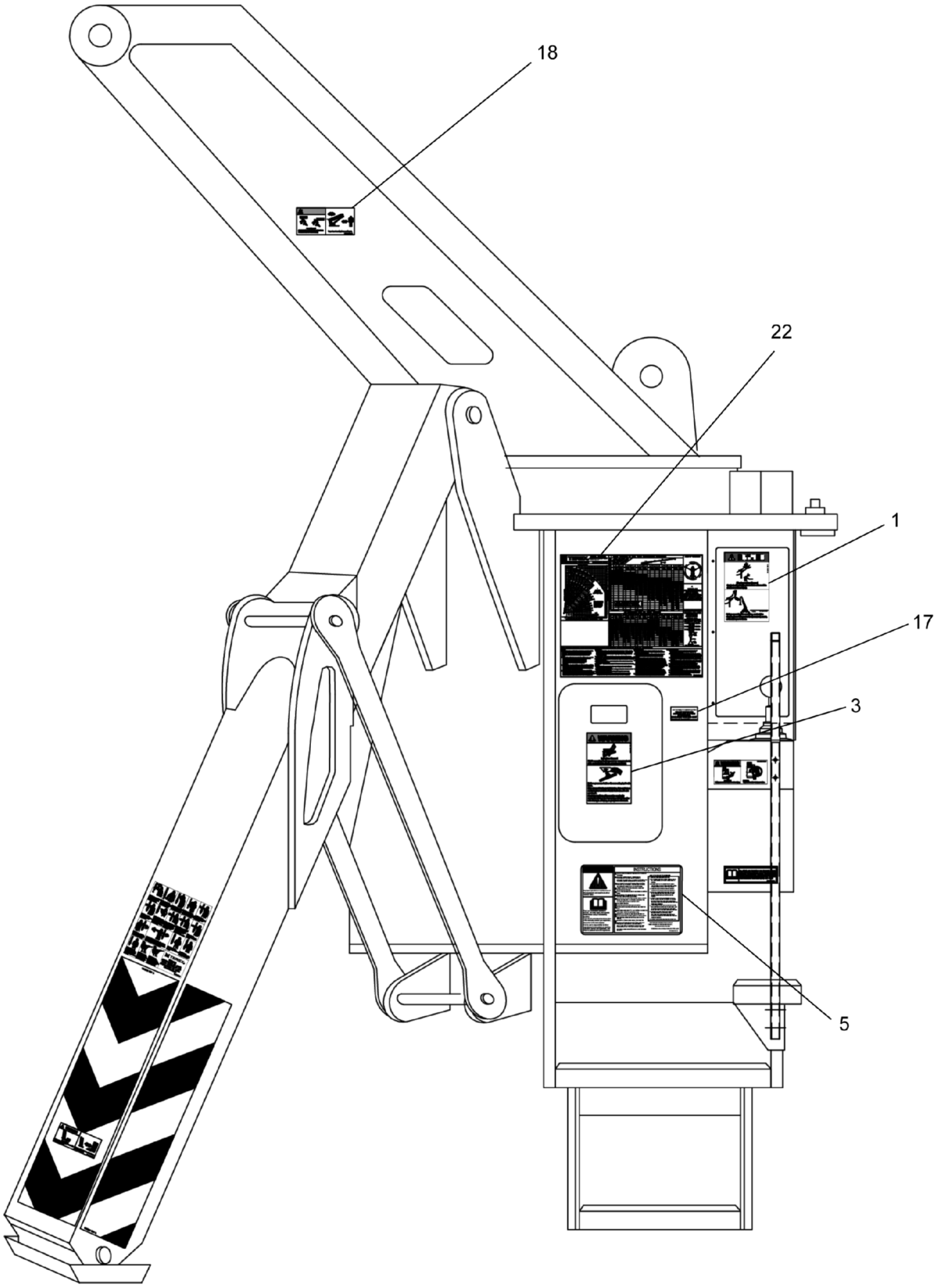

WHEN ORDERING PARTS, SPECIFY MODEL NUMBER, SERIAL NUMBER AND DESCRIPTION OF PARTS REQUIRED

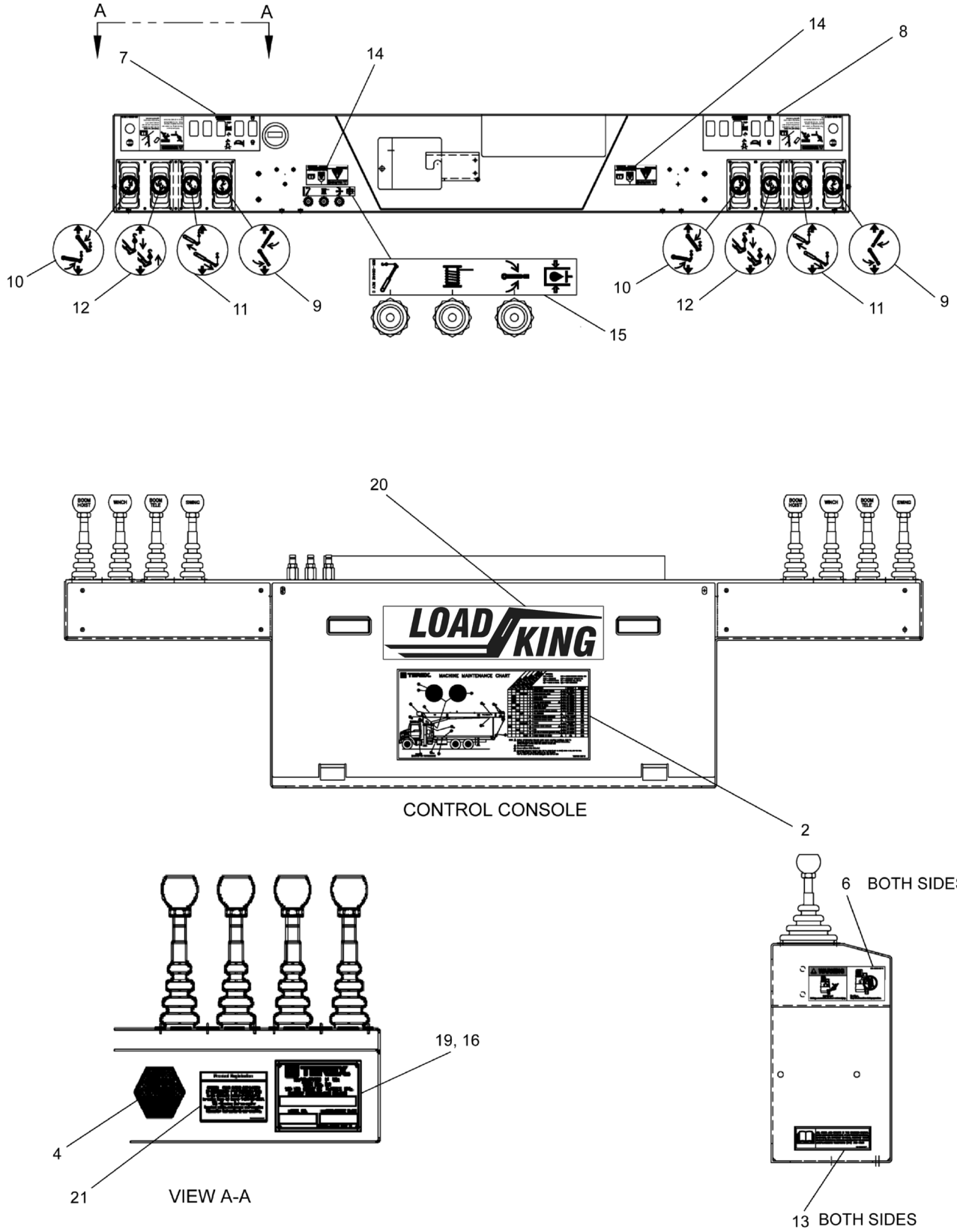

WHEN ORDERING PARTS, SPECIFY MODEL NUMBER, SERIAL NUMBER AND DESCRIPTION OF PARTS REQUIRED

REF	PART NO.	DESCRIPTION	QTY
	T117799-02 (Rev. M)	*Mainframe Turret & Console Decals W/ English Chart*	
1	1006868	Decal - Electrocution Hazard	2
2	1006835	Decal - Machine Maintenance Chart	1
3	12400-1503	Decal - Skin Injection	2
4	CTOS-CIC	Decal, Product Support	1
5	T105045	Decal - Operating Instructions	2
6	1006867	Decal - No Ride Step/Platform	2
7	651-00460-1	Decal - Control Console, S.S.	1
8	651-00460-2	Decal - Control Console, C.S.	1
9	650-00329	Decal - Boom Swing Control	2
10	650-00330	Decal - Boom Hoist Control	2
11	650-00411	Decal - Boom TELE Control	2
12	T106562	Decal - Winch Control	2
13	651-00253	Decal - All Signs & Chats - Owner's Manual	2
14	651-00470	Decal - Personnel Lift	2
15	651-00442	Decal - Test Port	1
16	VBB-125X400-L5	RVT, BTNHD, BLND 0.125 X 0.400, AL	4
17	653-00229	Decal - Stability Certification	2
18	651-00425	Decal - Boom/Turret Crush Hazard	2
19	12400-2032	Placard - Serial Number	1
20	1007068	Decal - 2.19" Load King Logo (White Letters)	1
21	1007065	Decal, Product Registration	1
22	T120402	Decal - Load Chart (English)	2

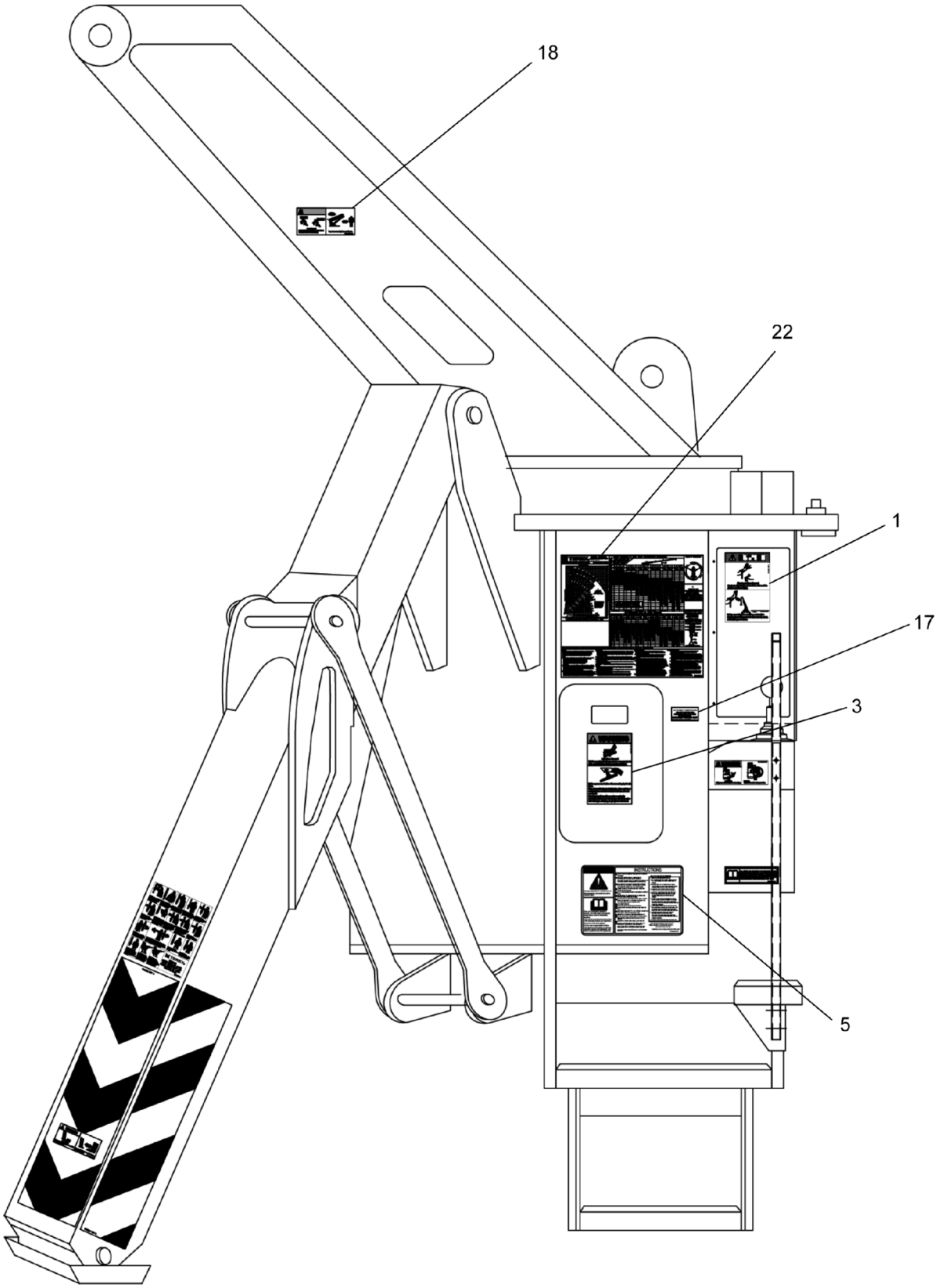

WHEN ORDERING PARTS, SPECIFY MODEL NUMBER, SERIAL NUMBER AND DESCRIPTION OF PARTS REQUIRED

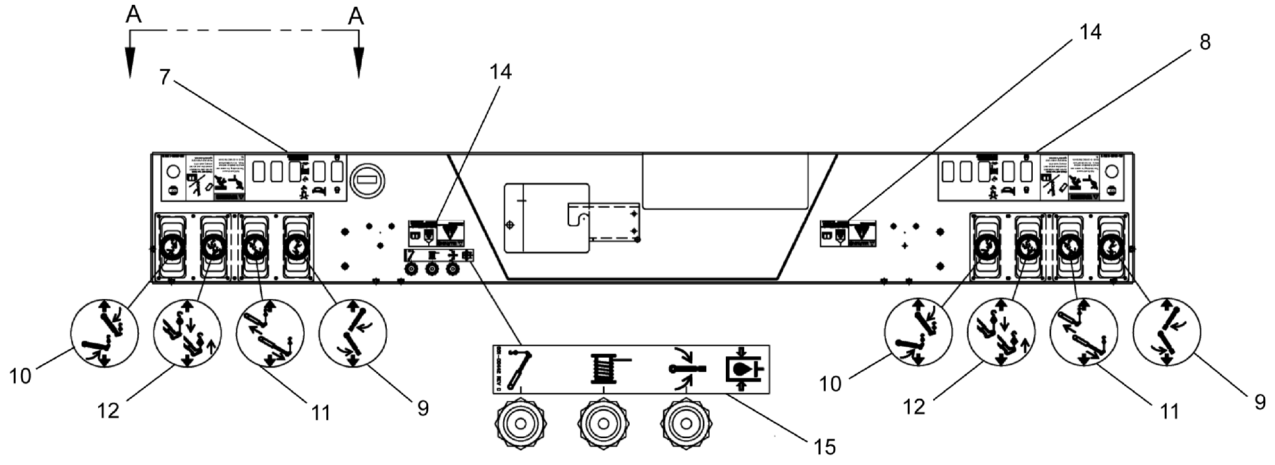

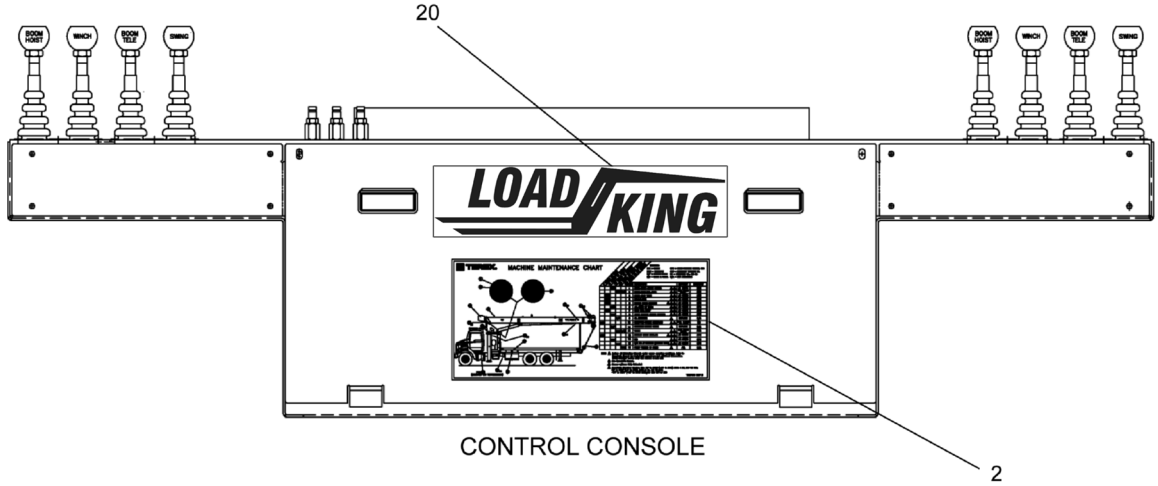

CONTROL CONSOLE

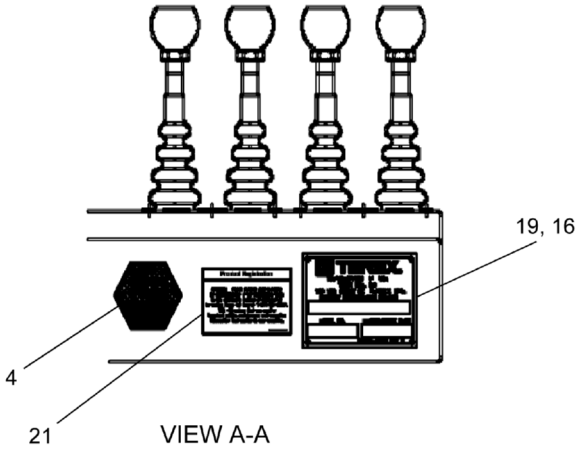

VIEW A-A

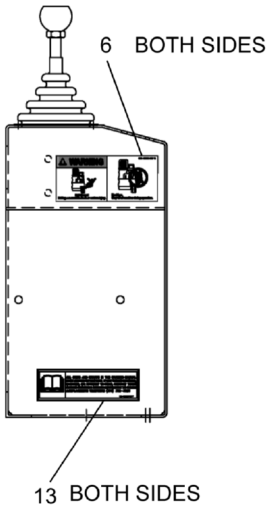

WHEN ORDERING PARTS, SPECIFY MODEL NUMBER, SERIAL NUMBER AND DESCRIPTION OF PARTS REQUIRED

REF	PART NO.	DESCRIPTION	QTY
	T117799-03 (Rev. M)	*Mainframe Turret & Console Decals W/ Metric Chart*	
1	1006868	Decal - Electrocution Hazard	2
2	1006835	Decal - Machine Maintenance Chart	1
3	12400-1503	Decal - Skin Injection	2
4	CTOS-CIC	Decal, Product Support	1
5	T105045	Decal - Operating Instructions	2
6	1006867	Decal - No Ride Step/Platform	2
7	651-00460-1	Decal - Control Console, S.S.	1
8	651-00460-2	Decal - Control Console, C.S.	1
9	650-00329	Decal - Boom Swing Control	2
10	650-00330	Decal - Boom Hoist Control	2
11	650-00411	Decal - Boom TELE Control	2
12	T106562	Decal - Winch Control	2
13	651-00253	Decal - All Signs & Chats - Owner's Manual	2
14	651-00470	Decal - Personnel Lift	2
15	651-00442	Decal - Test Port	1
16	VBB-125X400-L5	RVT, BTNHD, BLND 0.125 X 0.400, AL	4
17	653-00229	Decal - Stability Certification	2
18	651-00425	Decal - Boom/Turret Crush Hazard	2
19	12400-2032	Placard - Serial Number	1
20	1007068	Decal - 2.19" Load King Logo (White Letters)	1
21	1007065	Decal, Product Registration	1
22	T117527	Decal - Load Chart (Metric)	2

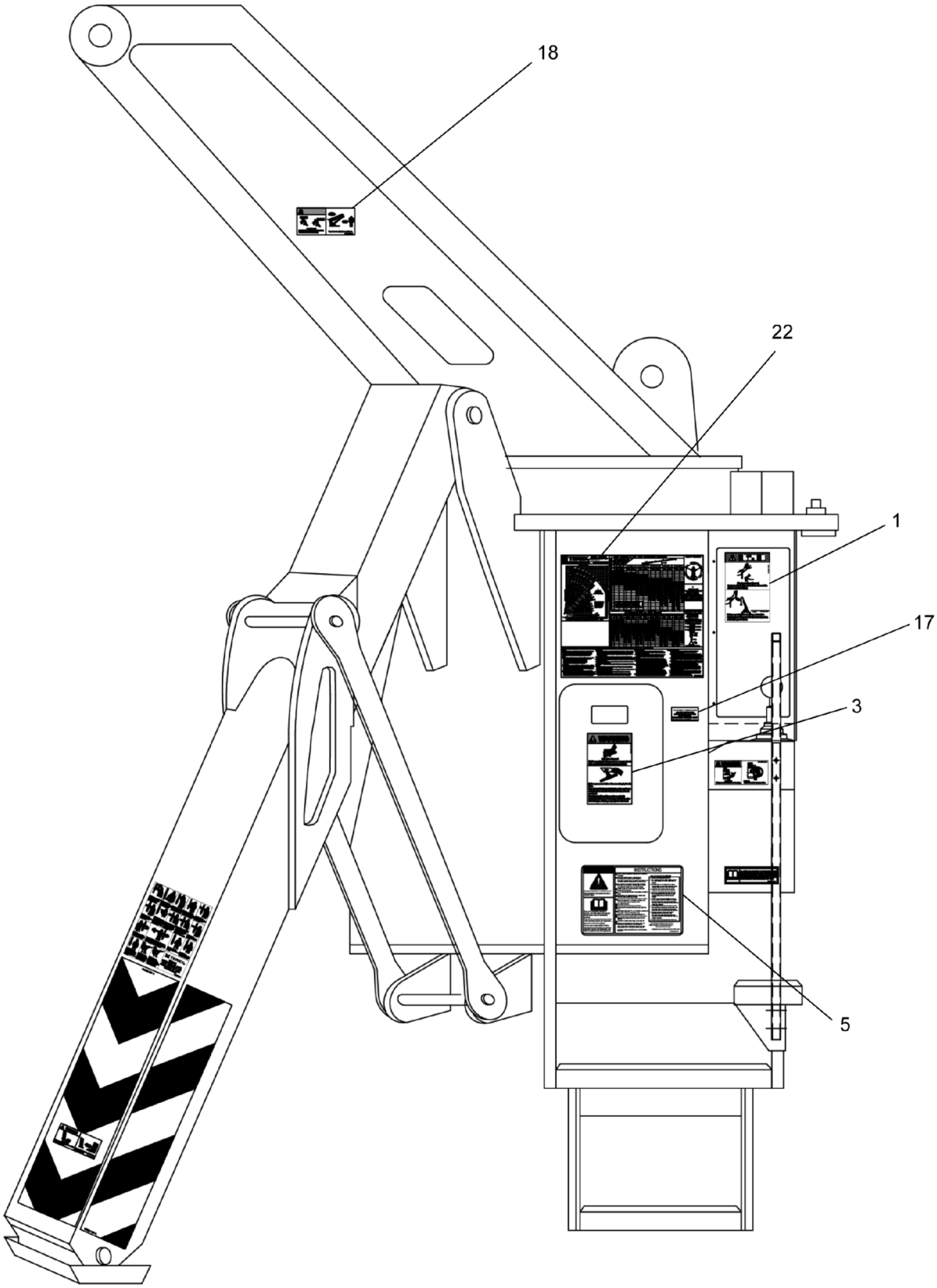

WHEN ORDERING PARTS, SPECIFY MODEL NUMBER, SERIAL NUMBER AND DESCRIPTION OF PARTS REQUIRED

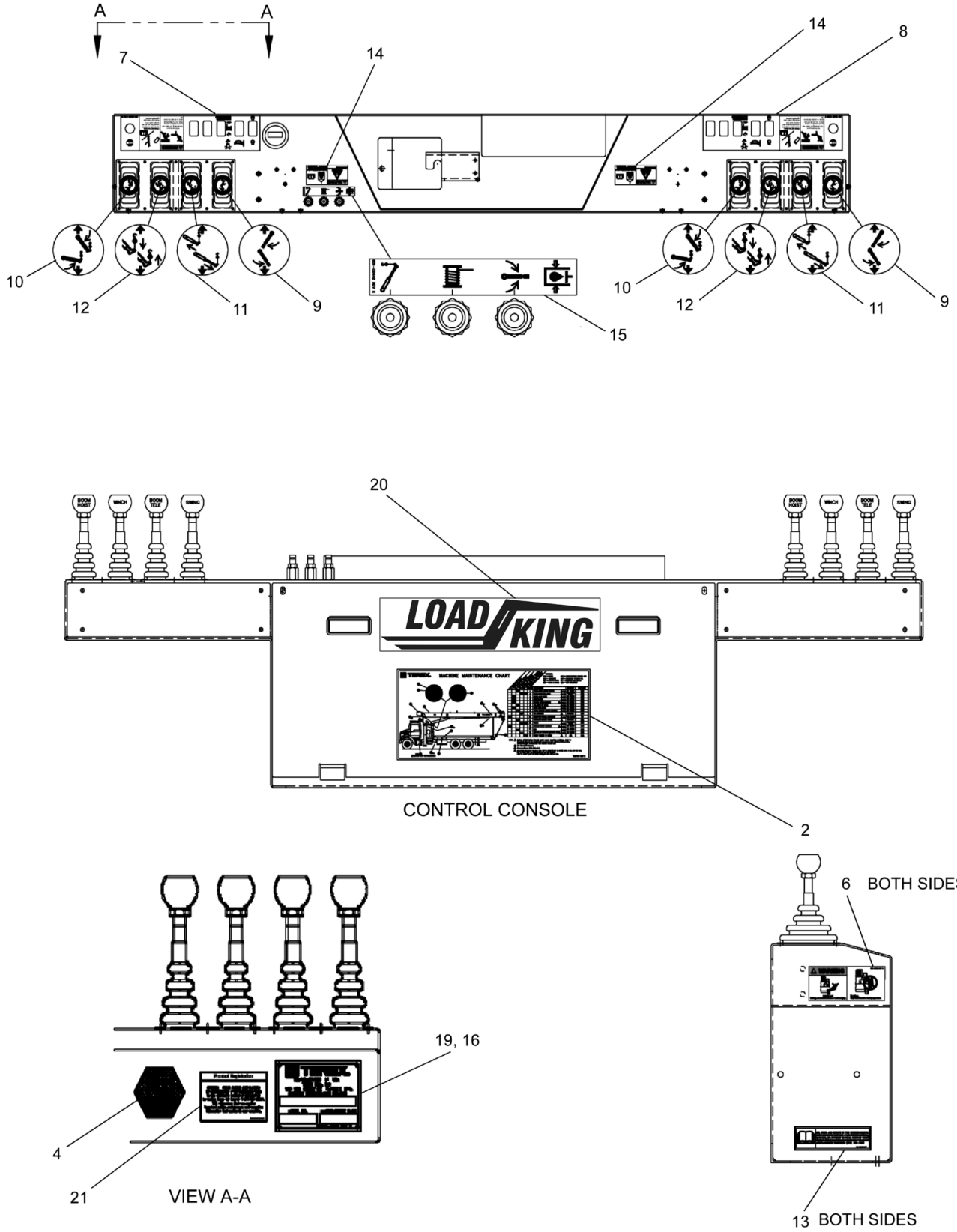

WHEN ORDERING PARTS, SPECIFY MODEL NUMBER, SERIAL NUMBER AND DESCRIPTION OF PARTS REQUIRED

REF	PART NO.	DESCRIPTION	QTY
	T117799-04 (Rev. M)	*Mainframe Turret & Console Decals English 360° Chart W/Front Jack*	
1	1006868	Decal - Electrocution Hazard	2
2	1006835	Decal - Machine Maintenance Chart	1
3	12400-1503	Decal - Skin Injection	2
4	CTOS-CIC	Decal, Product Support	1
5	T105045	Decal - Operating Instructions	2
6	1006867	Decal - No Ride Step/Platform	2
7	651-00460-1	Decal - Control Console, S.S.	1
8	651-00460-2	Decal - Control Console, C.S.	1
9	650-00329	Decal - Boom Swing Control	2
10	650-00330	Decal - Boom Hoist Control	2
11	650-00411	Decal - Boom TELE Control	2
12	T106562	Decal - Winch Control	2
13	651-00253	Decal - All Signs & Chats - Owner's Manual	2
14	651-00470	Decal - Personnel Lift	2
15	651-00442	Decal - Test Port	1
16	VBB-125X400-L5	RVT, BTNHD, BLND 0.125 X 0.400, AL	4
17	653-00229	Decal - Stability Certification	2
18	651-00425	Decal - Boom/Turret Crush Hazard	2
19	12400-2032	Placard - Serial Number	1
20	1007068	Decal - 2.19" Load King Logo (White Letters)	1
21	1007065	Decal, Product Registration	1
22	T119362	Decal - Load Chart 360° W/Front Jack (English)	2

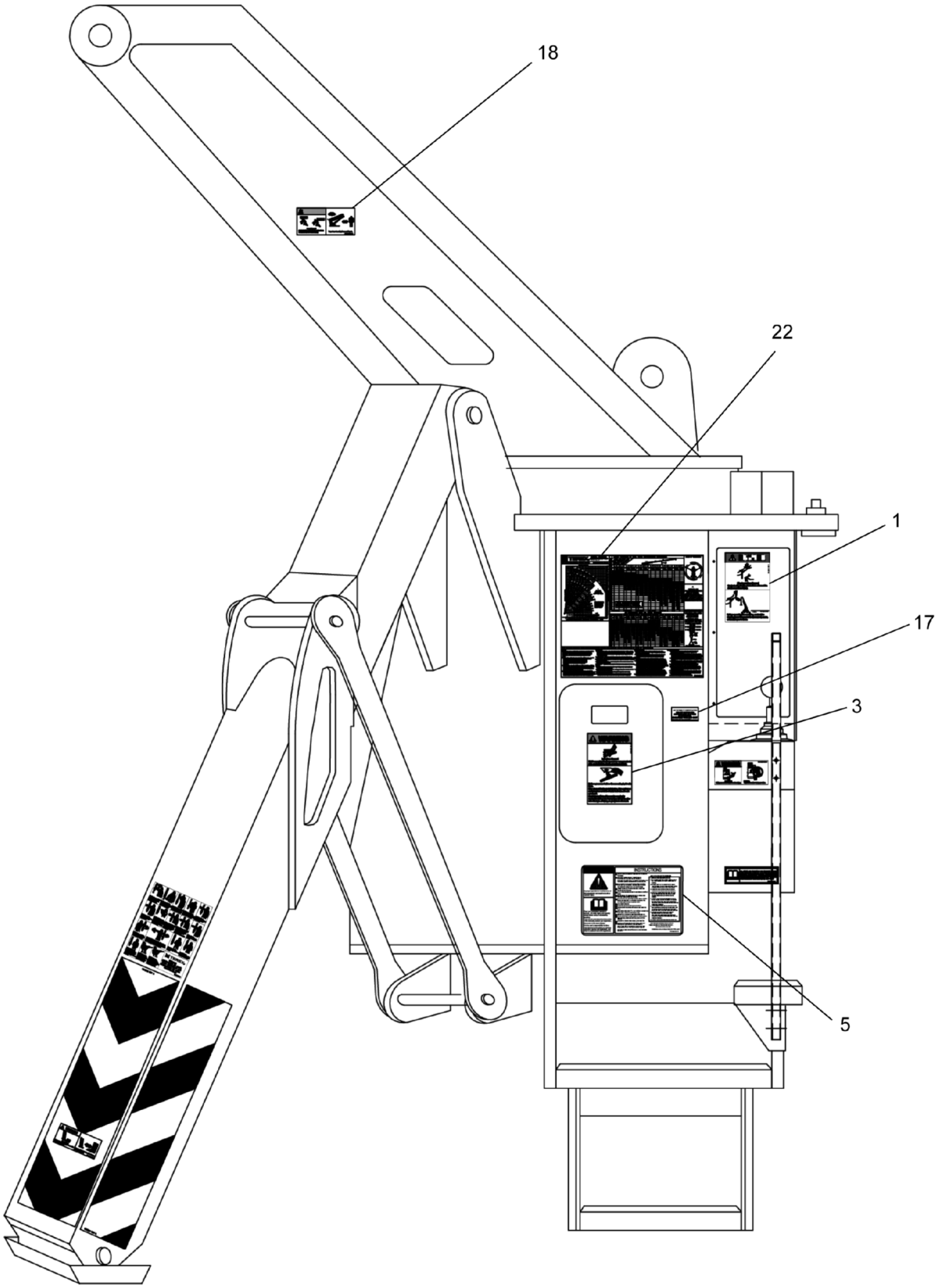

WHEN ORDERING PARTS, SPECIFY MODEL NUMBER, SERIAL NUMBER AND DESCRIPTION OF PARTS REQUIRED

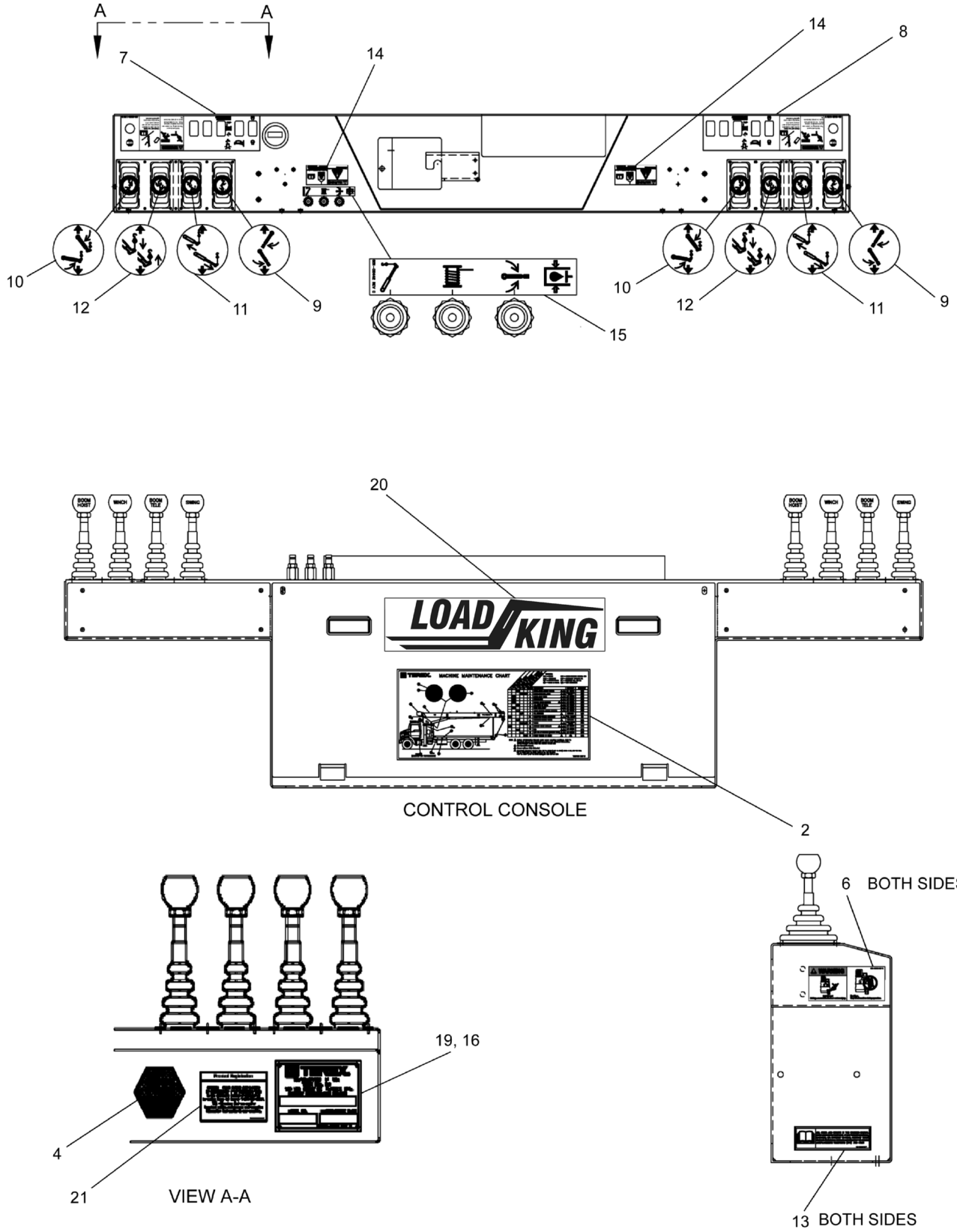

WHEN ORDERING PARTS, SPECIFY MODEL NUMBER, SERIAL NUMBER AND DESCRIPTION OF PARTS REQUIRED

REF	PART NO.	DESCRIPTION	QTY
	T117799-05 (Rev. M)	*Mainframe Turret & Console Decals Metric Chart Spanish*	
1	1006868	Decal - Electrocution Hazard	2
2	1006835	Decal - Machine Maintenance Chart	1
3	12400-1503	Decal - Skin Injection	2
4	CTOS-CIC	Decal, Product Support	1
5	T105045	Decal - Operating Instructions	2
6	1006867	Decal - No Ride Step/Platform	2
7	651-00460-1	Decal - Control Console, S.S.	1
8	651-00460-2	Decal - Control Console, C.S.	1
9	650-00329	Decal - Boom Swing Control	2
10	650-00330	Decal - Boom Hoist Control	2
11	650-00411	Decal - Boom TELE Control	2
12	T106562	Decal - Winch Control	2
13	651-00253	Decal - All Signs & Chats - Owner's Manual	2
14	651-00470	Decal - Personnel Lift	2
15	651-00442	Decal - Test Port	1
16	VBB-125X400-L5	RVT, BTNHD, BLND 0.125 X 0.400, AL	4
17	653-00229	Decal - Stability Certification	2
18	651-00425	Decal - Boom/Turret Crush Hazard	2
19	12400-2032	Placard - Serial Number	1
20	1007068	Decal - 2.19" Load King Logo (White Letters)	1
21	1007065	Decal, Product Registration	1
22	T135599	Decal - Load Chart (Metric) - Spanish Latin American	2

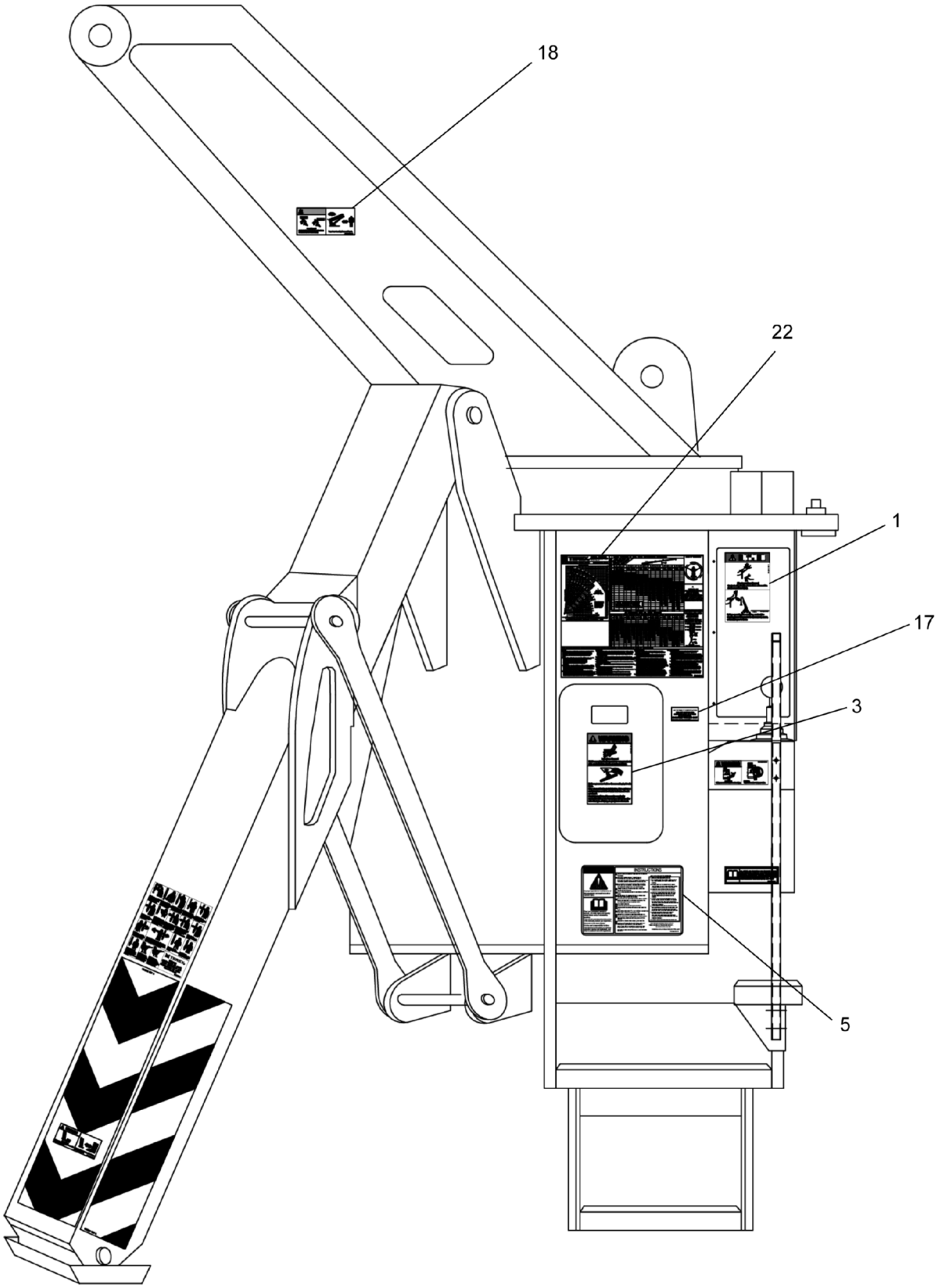

WHEN ORDERING PARTS, SPECIFY MODEL NUMBER, SERIAL NUMBER AND DESCRIPTION OF PARTS REQUIRED

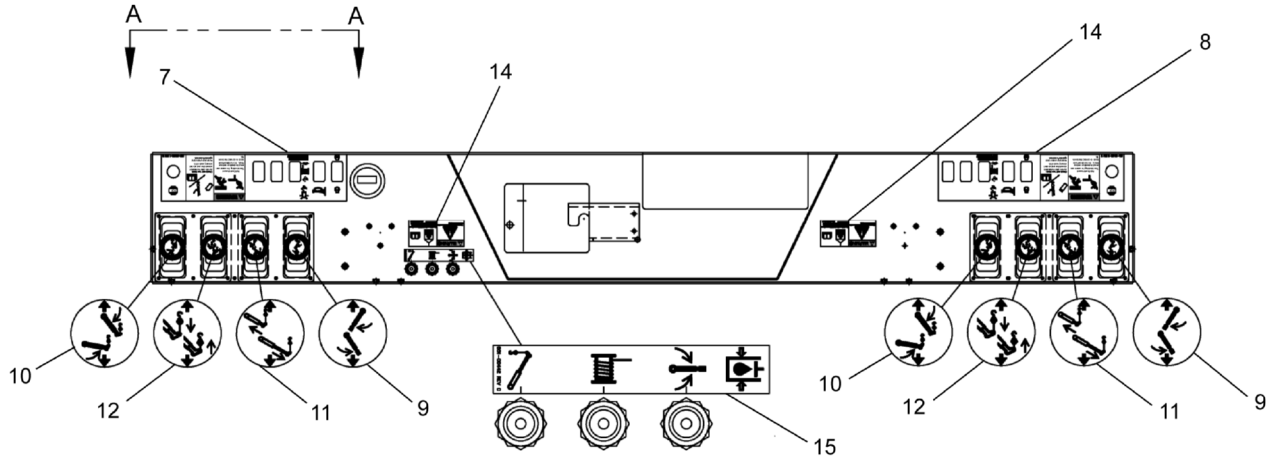

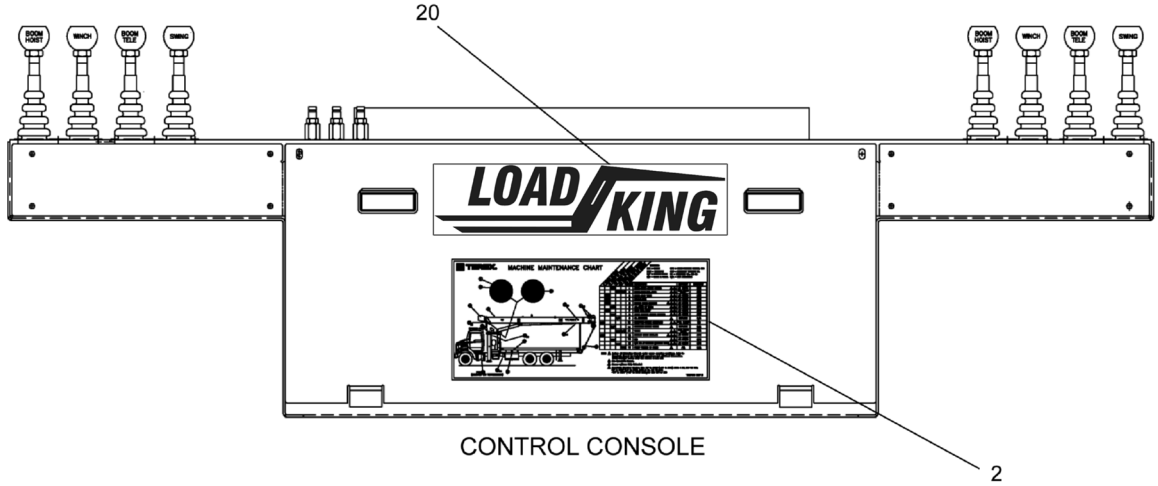

CONTROL CONSOLE

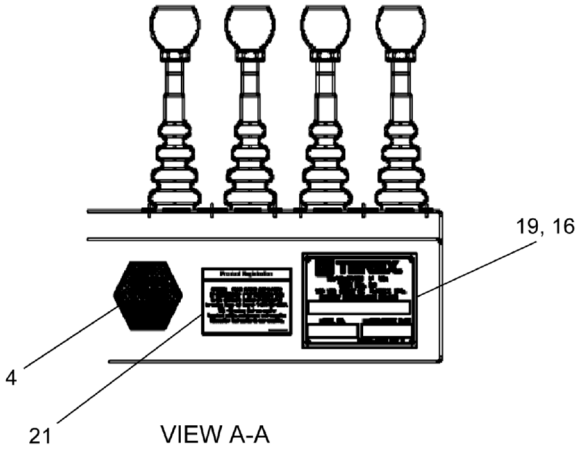

VIEW A-A

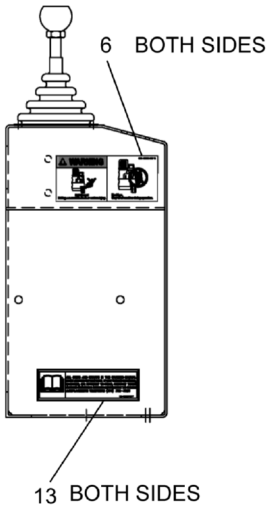

WHEN ORDERING PARTS, SPECIFY MODEL NUMBER, SERIAL NUMBER AND DESCRIPTION OF PARTS REQUIRED

REF	PART NO.	DESCRIPTION	QTY
	T117799-06 (Rev. M)	*Mainframe Turret & Console Decals Metric 360° Chart W/Front Jack*	
1	1006868	Decal - Electrocution Hazard	2
2	1006835	Decal - Machine Maintenance Chart	1
3	12400-1503	Decal - Skin Injection	2
4	CTOS-CIC	Decal, Product Support	1
5	T105045	Decal - Operating Instructions	2
6	1006867	Decal - No Ride Step/Platform	2
7	651-00460-1	Decal - Control Console, S.S.	1
8	651-00460-2	Decal - Control Console, C.S.	1
9	650-00329	Decal - Boom Swing Control	2
10	650-00330	Decal - Boom Hoist Control	2
11	650-00411	Decal - Boom TELE Control	2
12	T106562	Decal - Winch Control	2
13	651-00253	Decal - All Signs & Chats - Owner's Manual	2
14	651-00470	Decal - Personnel Lift	2
15	651-00442	Decal - Test Port	1
16	VBB-125X400-L5	RVT, BTNHD, BLND 0.125 X 0.400, AL	4
17	653-00229	Decal - Stability Certification	2
18	651-00425	Decal - Boom/Turret Crush Hazard	2
19	12400-2032	Placard - Serial Number	1
20	1007068	Decal - 2.19" Load King Logo (White Letters)	1
21	1007065	Decal, Product Registration	1
22	T119363	Decal - Load Chart 360° W/Front Jack (Metric)	2

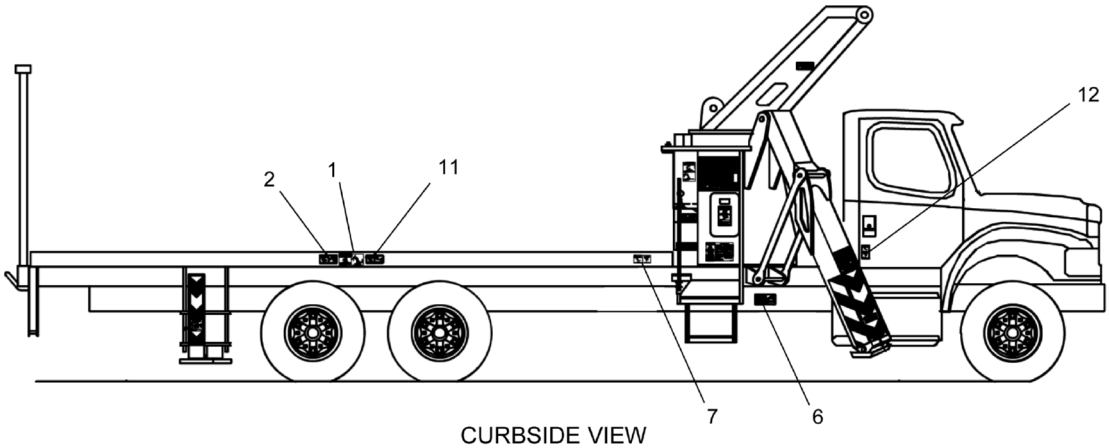

CURBSIDE VIEW

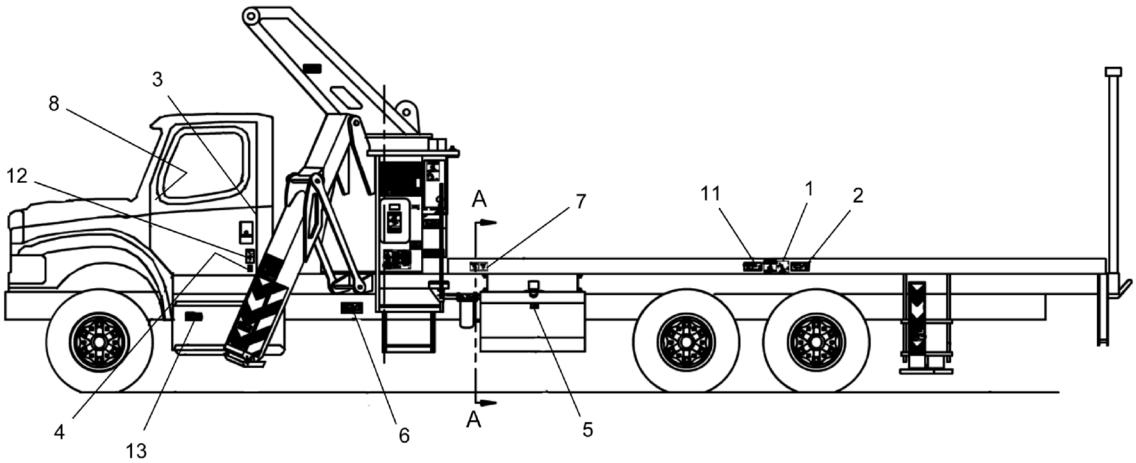

STREET SIDE VIEW

SUPER DUTY FLAT BED

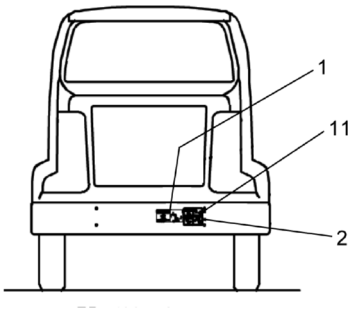

FRONT VIEW

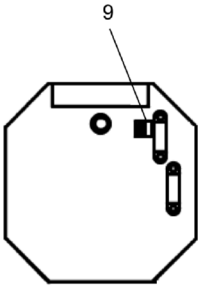

SECTION A-A

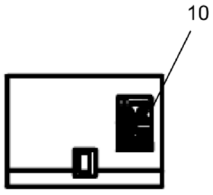

BATTERY BOX

WHEN ORDERING PARTS, SPECIFY MODEL NUMBER, SERIAL NUMBER AND DESCRIPTION OF PARTS REQUIRED

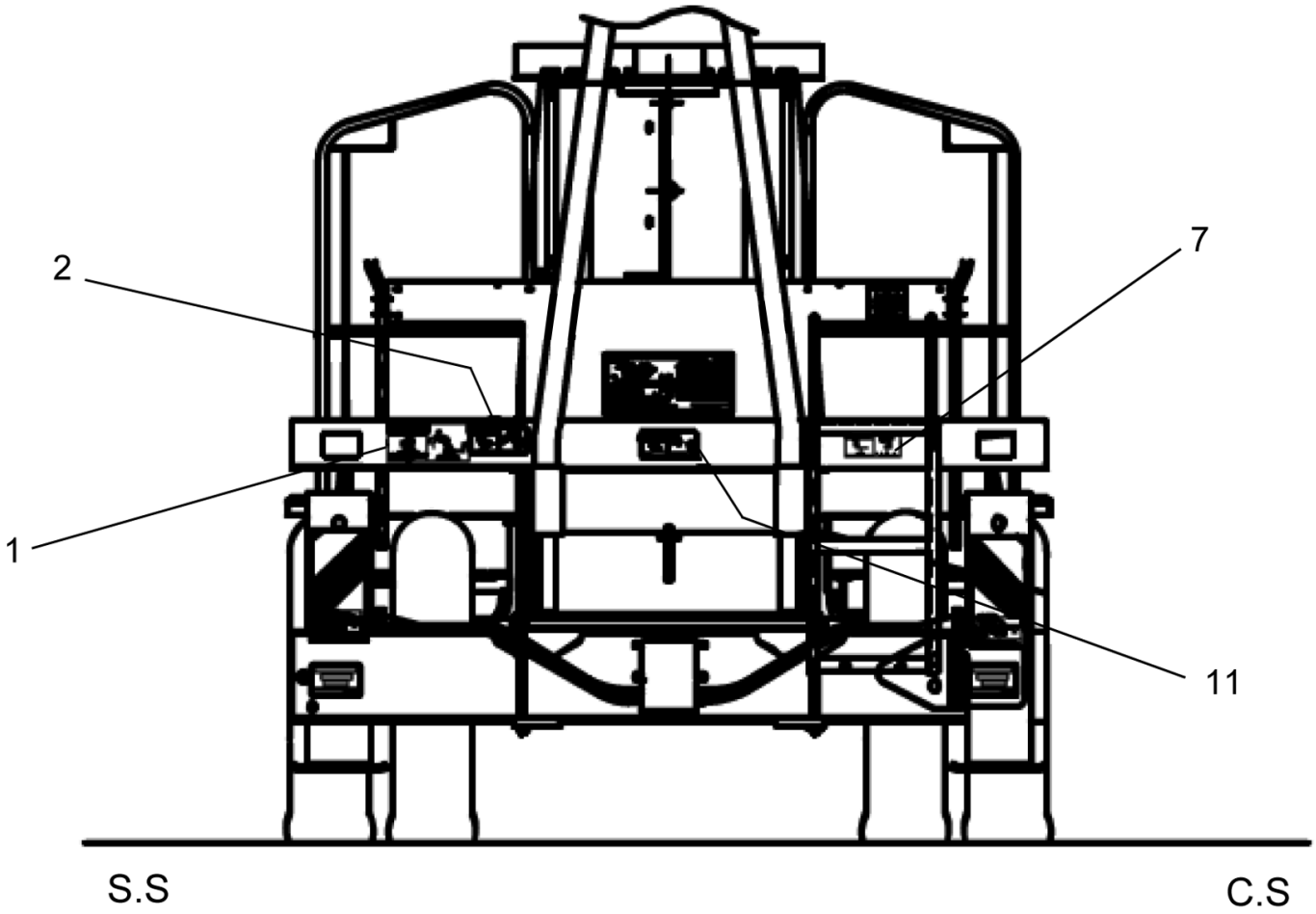

REAR VIEW

REF	PART NO.	DESCRIPTION	QTY
	T117806 (Rev. E)	*Decal Location Truck, Flatbed & HYS Tank*	
1	T106560	Decal - Electrocution Hazard Stay Clear Personel	4
2	651-00415	Decal - No Riding Boom/ Jib/ Load	4
3	654-00704	Decal - Final Vehicle Inspection	1
4	12400-1003	Decal - Fire Extinguisher	1
5	652-00073	Decal - Hydraulic Oil Only	1
6	1006841	Decal - Entanglement	2
7	12400-1516	Decal - Fall Hazard	3
8	652-00575	Decal - PTO Operating Instructions	1
9	651-00418	Decal - HYD. Oil Level	1
10	651-00473	Decal - Battery Danger	1
11	T139673	Decal - Crush, Stay Clear Load	4
12	T141898	Decal - Fall Hazard	2
13	12400-1508	Decal - Danger, Diesel Explosion/Burn	1

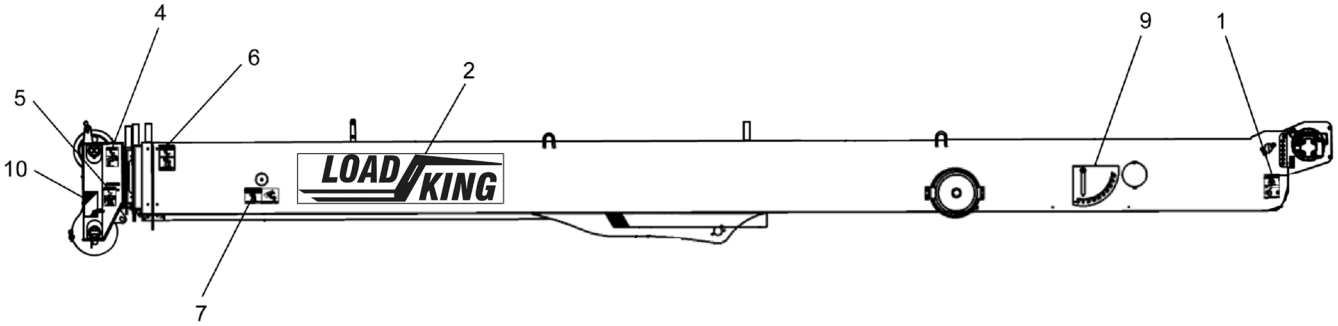

CURBSIDE VIEW

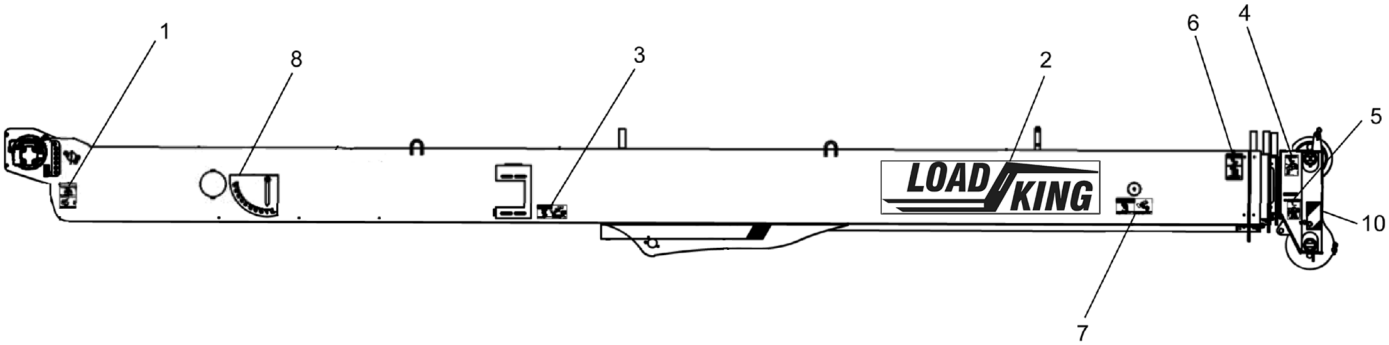

STREET SIDE VIEW

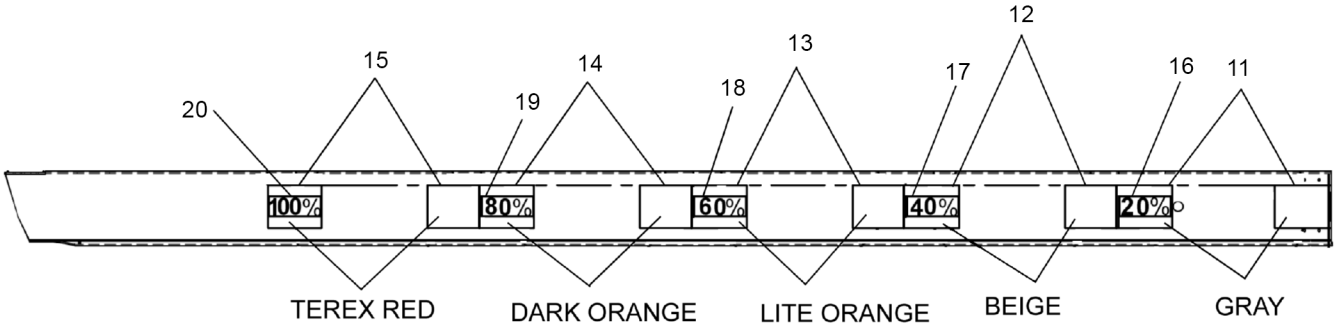

2ND STAGE RIGHT SIDE DECALS

WHEN ORDERING PARTS, SPECIFY MODEL NUMBER, SERIAL NUMBER AND DESCRIPTION OF PARTS REQUIRED

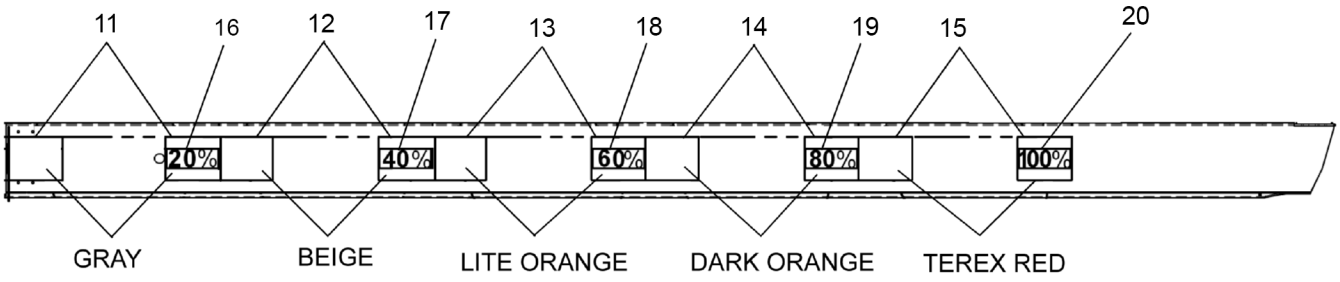

2ND STAGE LEFT SIDE DECALS

REF	PART NO.	DESCRIPTION	QTY
	T117798 (Rev. C)	*Boom Decal Location*	
1	651-00424	Decal - Loadline Crush Hazard	2
2	1007067	Decal - Load King Logo (Black) 10.5" Crown	2
3	12400-1515	Decal - Jib Pin	1
4	T121866	Decal - Jib Removal W/Lift	2
5	T121867	Decal - Lanyard Hook Location	2
6	651-00416	Decal - Safe Elevated Access	2
7	653-00411	Decal - Crush/Cut Hazard	2
8	1006872	Decal - Boom Angle Indicator - RH	1
9	1006873	Decal - Boom Angle Indicator - LH	1
10	1006840	Decal - Boom Head Safety Stripe	2
11	T105414	Decal - Boom Length Indicator Color Gray (PMS 429 C)	4
12	T105415	Decal - Boom Length Indicator Color Beige (PMS 149 C)	4
13	T105417	Decal - Boom Length Indicator Color Lite Orange (PMS 143 C)	4
14	T105418	Decal - Boom Length Indicator Color Dark Orange (PMS 151 C)	4
15	1006832	Decal - Boom Length Indicator Color Load King Red (PMS 200 C)	4
16	T105384	Decal - Boom Length Indicator Text 20%	2
17	T105386	Decal - Boom Length Indicator Text 40%	2
18	T105387	Decal - Boom Length Indicator Text 60%	2
19	T105388	Decal - Boom Length Indicator Text 80%	2
20	T105389	Decal - Boom Length Indicator Text 100%	2

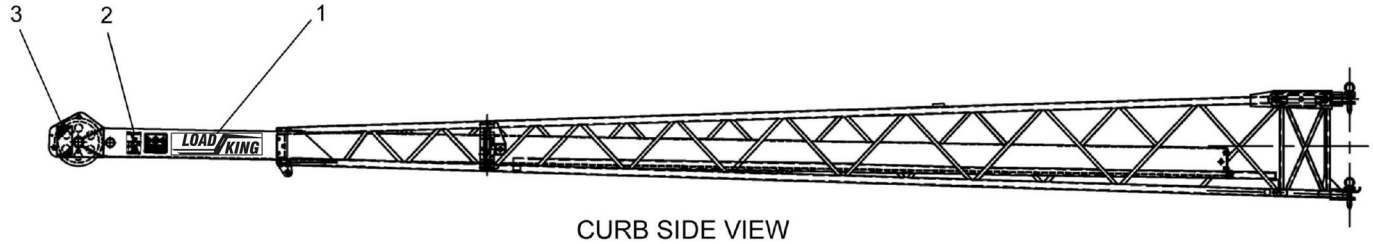

CURB SIDE VIEW

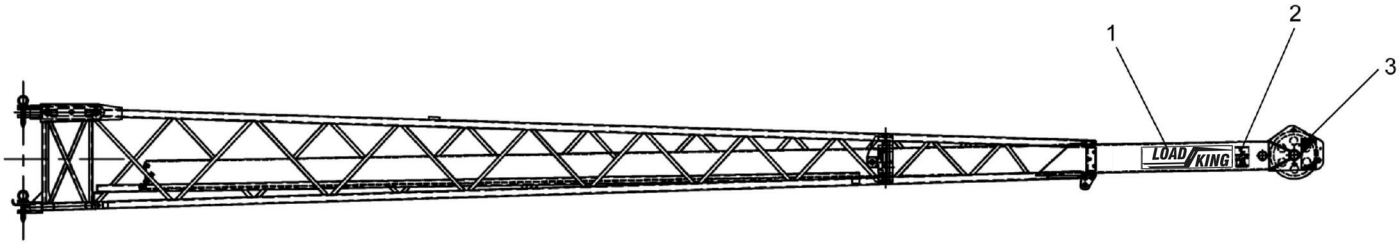

STREET SIDE VIEW

REF	PART NO.	DESCRIPTION	QTY
	T105043 (Rev. C)	*Jib Decal Location*	
1	1007066	Decal - Load King Logo (3.68 BLK Letters)	2
2	T121867	Decal - Lanyard Hook Location	2
3	1006840	Decal - Boom Head Safety Stripe	2

WHEN ORDERING PARTS, SPECIFY MODEL NUMBER, SERIAL NUMBER AND DESCRIPTION OF PARTS REQUIRED

REF	PART NO.	DESCRIPTION	QTY
	T131594 (Rev. A)	*2-Man Steel Platform Manual, Decals- English*	
1	T131189	Decal, BT28106 2-Man Working Range Diagram (English)	3
2	**T131596**	Man Platform & 4th SECT. Decal Location (English) (see page 312)	1

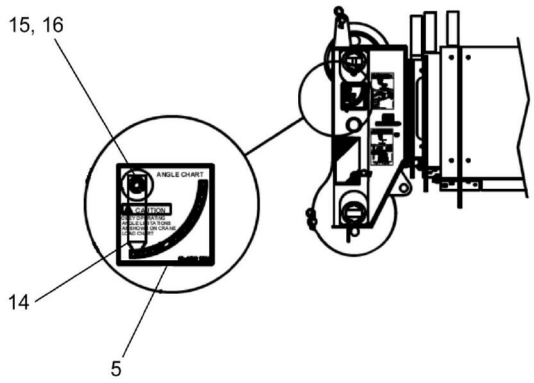

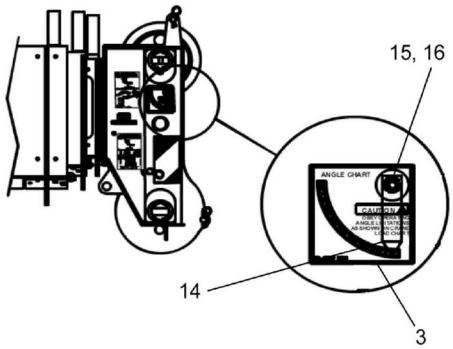

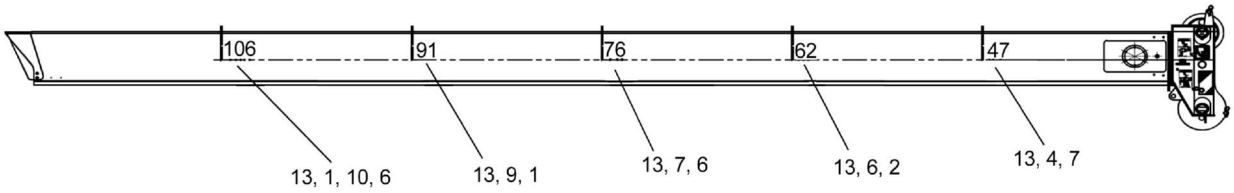

4TH STAGE ENGLISH DECAL
TYPICAL OPPOSITE SIDE

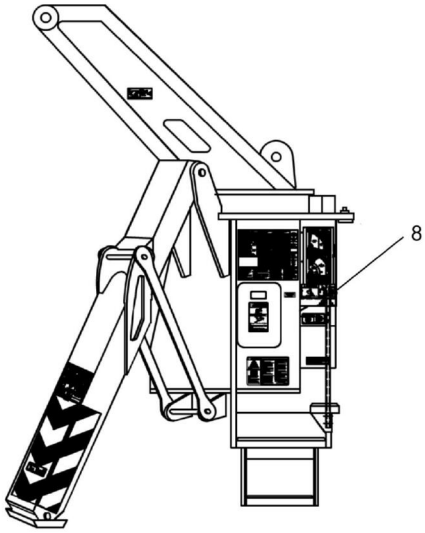

STREET SIDE MAINFRAME & TURRET
TYPICAL OPPOSITE SIDE

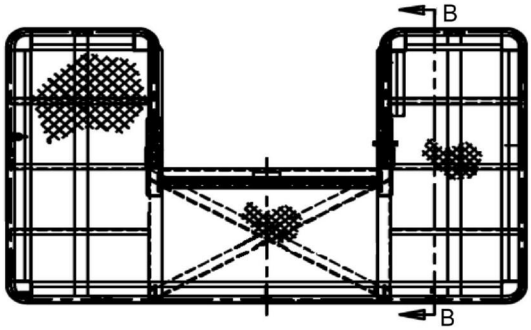

TOP VIEW
TWO MAN STEEL PERSONNEL PLATFORM

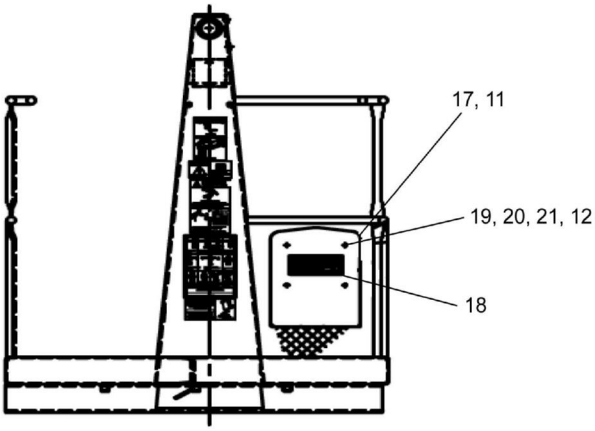

VIEW B-B
TWO MAN STEEL PERSONNEL PLATFORM

WHEN ORDERING PARTS, SPECIFY MODEL NUMBER, SERIAL NUMBER AND DESCRIPTION OF PARTS REQUIRED

REF	PART NO.	DESCRIPTION	QTY
	T131596 (Rev. C)	*Man Platform & 4th SECT. Decal Location (English)*	
1	1006839	Decal - Number 1 (Load King White)	4
2	1006839	Decal - Number 2 (Load King White)	2
3	651-00367	Decal - Angle Chart R.H.	1
4	1006839	Decal - Number 4 (Load King White)	2
5	651-00366	Decal - Angle Chart L.H.	1
6	1006839	Decal - Number 6 (Load King White)	6
7	1006839	Decal - Number 7 (Load King White)	4
8	1007056	Decal, Electrocution Hazard (Horizontal)	2
9	1006839	Decal - Number 9 (Load King White)	2
10	1006839	Decal - Number 0 (Load King White)	2
11	T128911	Steel Personnel Platform Installation & Operation Manual	1
12	NYL-250C000-25	Nut, HEX NYL-INS 0.25-20, ST SQC G5	4
13	1006839	Decal - Indicating Line 4.5" (Load King White)	10
14	729-02579	Angle Pointer	2
15	WAR-375X000-22	WSH, FL, TYPA-REG 0.375, ST SQC	2
16	NYL-375C000-25	Nut, HEX NYL-INS 0.375-16, ST Z G5	2
17	T127361	Box, Manual Storage	1
18	1006833	Decal, All Sign & Charts	1
19	SHF-250C750-25	SCR, HHCS, 0.25-20 X 0.75, ST SQC G5	4
20	WBR-25RX734-20	Washer, FL TYPB-REG 0.25, ST SQC	4
21	WFD-250XA50-20	WSH, FNDR 0.25 X 1.50, ST SQC	4

REF	PART NO.	DESCRIPTION	QTY
	T131595 (Rev. A)	*2-Man Steel Platform Manual, Decals- Metric*	
1	T131192	Decal, BT28106 2-Man Working Range Diagram (Metric)	3
2	**T131598**	2-Man Platform & 4th SECT. Decal Location (Metric) (see page 315)	1

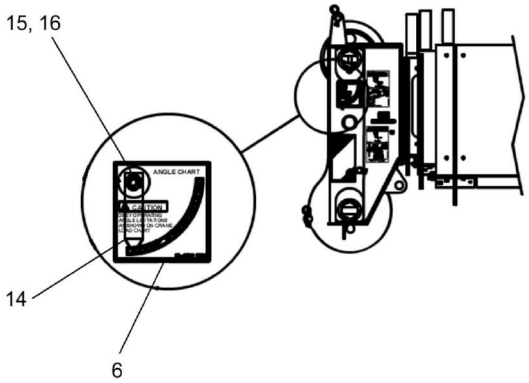

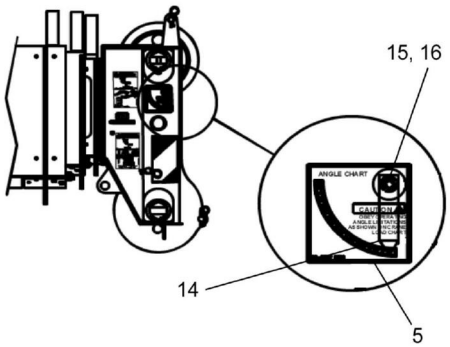

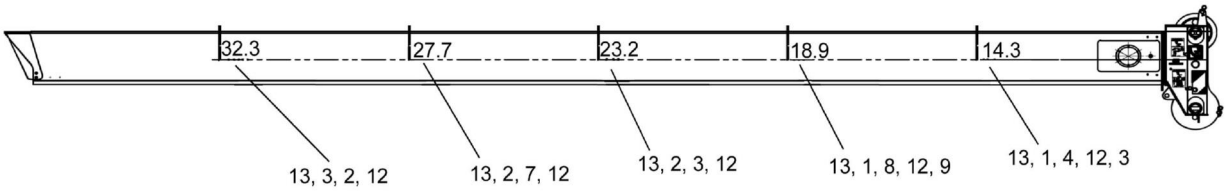

4TH STAGE METRIC DECAL
TYPICAL OPPOSITE SIDE

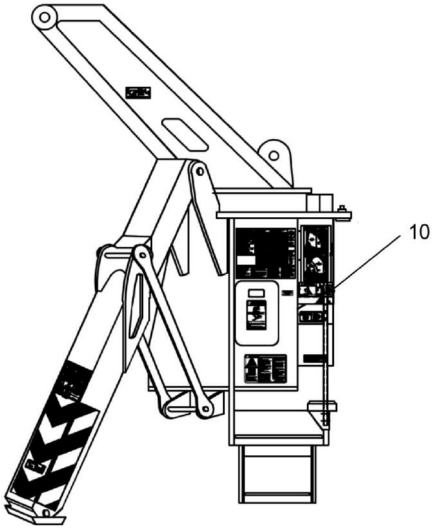

STREET SIDE MAINFRAME & TURRET
TYPICAL OPPOSITE SIDE

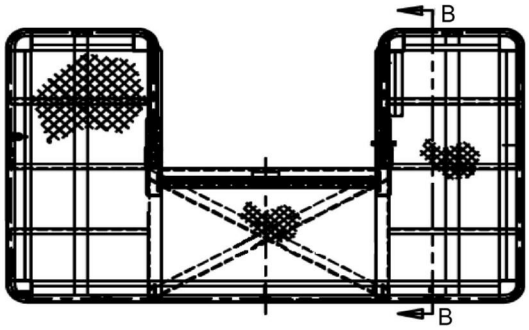

TOP VIEW
TWO MAN STEEL PERSONNEL PLATFORM

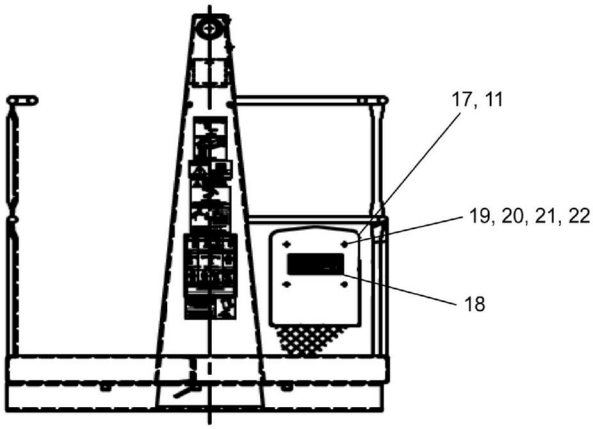

VIEW B-B
TWO MAN STEEL PERSONNEL PLATFORM

REF	PART NO.	DESCRIPTION	QTY
	T131598 (Rev. C)	*2-Man Platform & 4th SECT. Decal Location (Metric)*	
1	1006839	Decal - Number 1 (Load King White)	4
2	1006839	Decal - Number 2 (Load King White)	8
3	1006839	Decal - Number 3 (Load King White)	8
4	1006839	Decal - Number 4 (Load King White)	2
5	651-00367	Decal - Angle Chart R.H.	1
6	651-00366	Decal - Angle Chart L.H.	1
7	1006839	Decal - Number 7 (Load King White)	4
8	1006839	Decal - Number 8 (Load King White)	2
9	1006839	Decal - Number 9 (Load King White)	2
10	1007056	Decal, Electrocution Hazard (Horizontal)	2
11	T128911	Steel Personnel Platform Installation & Operation Manual	1
12	1006839	Decal - Decimal Point (Load King White)	10
13	1006839	Decal - Indicating Line 4.5" (Load King White)	10
14	729-02579	Angle Pointer	2
15	WAR-375X000-22	WSH, FL, TYPA-REG 0.375, ST SQC	2
16	NYL-375C000-25	Nut, HEX NYL-INS 0.375-16, ST Z G5	2
17	T127361	Box, Manual Storage	1
18	1006833	Decal, All Sign & Charts	1
19	SHF-250C750-25	SCR, HHCS, 0.25-20 X 0.75, ST SQC G5	4
20	WBR-25RX734-20	Washer, FL TYPB-REG 0.25, ST SQC	4
21	WFD-250XA50-20	WSH, FNDR 0.25 X 1.50, ST SQC	4
22	NYL-250C000-25	Nut, HEX NYL-INS 0.25-20, ST SQC G5	4

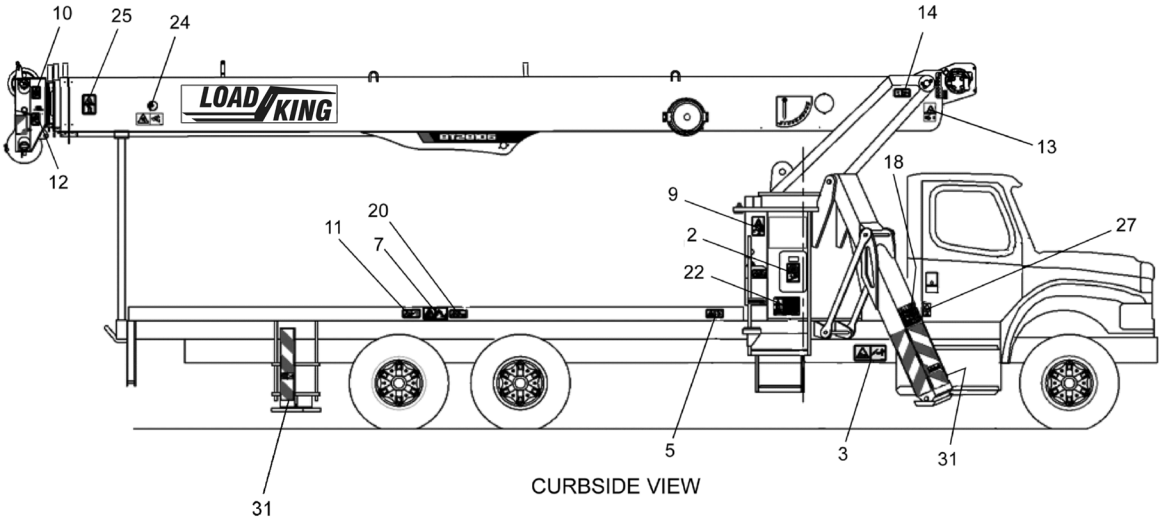

CURBSIDE VIEW

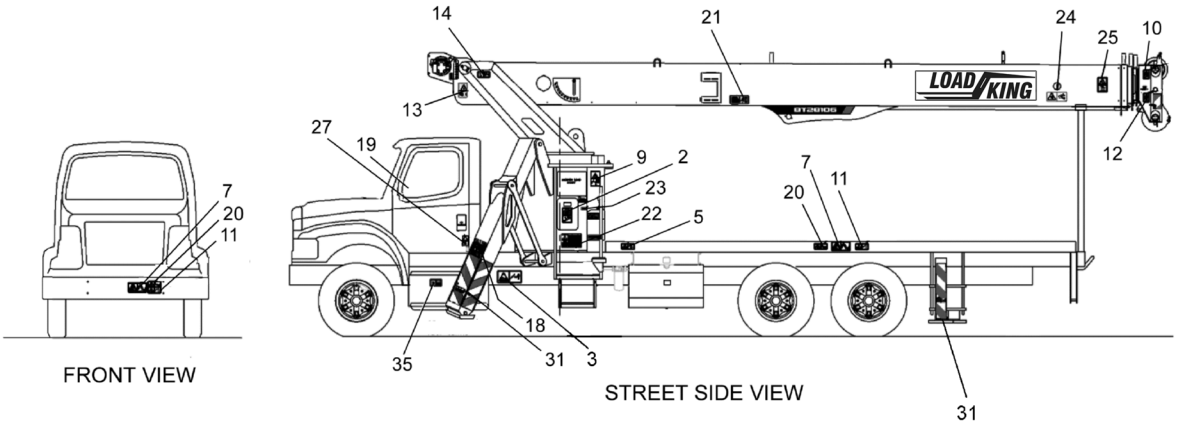

FRONT VIEW

STREET SIDE VIEW

SUPER DUTY FLATBED

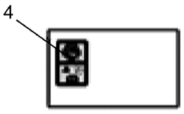

BATTERY BOX

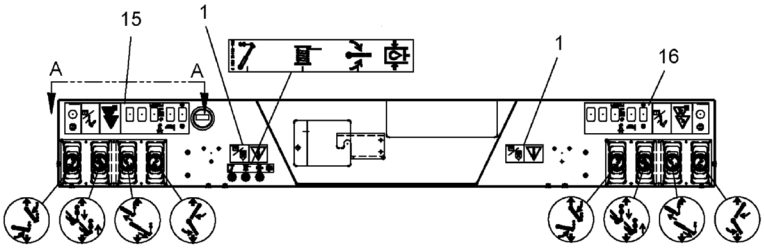

LOAD BLOCKS

WHEN ORDERING PARTS, SPECIFY MODEL NUMBER, SERIAL NUMBER AND DESCRIPTION OF PARTS REQUIRED

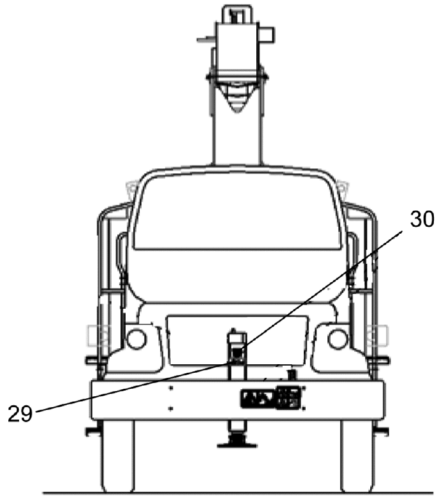

FIFTH OUTRIGGER DECAL LOCATIONS

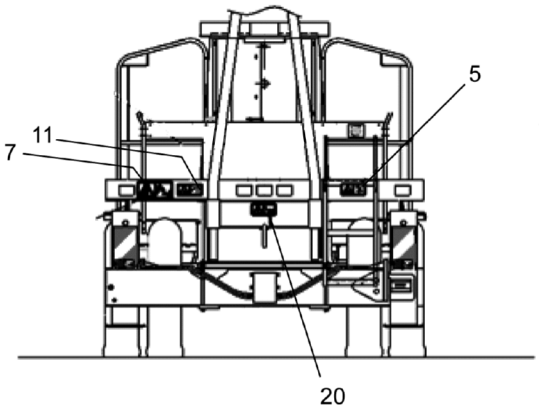

REAR VIEW

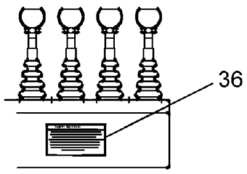

VIEW A-A

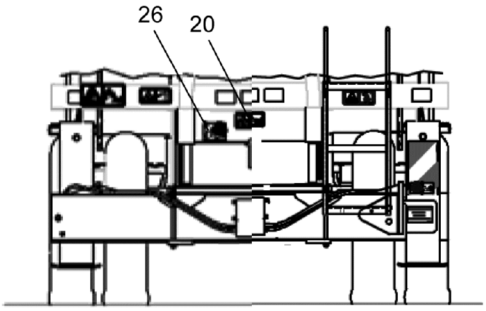

INCHING WINCH DECAL LOCATION

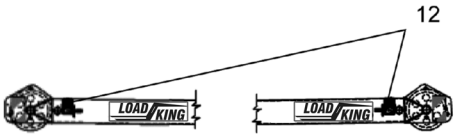

JIB DECAL LOCATIONS

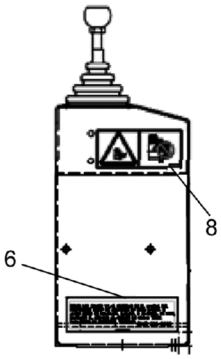

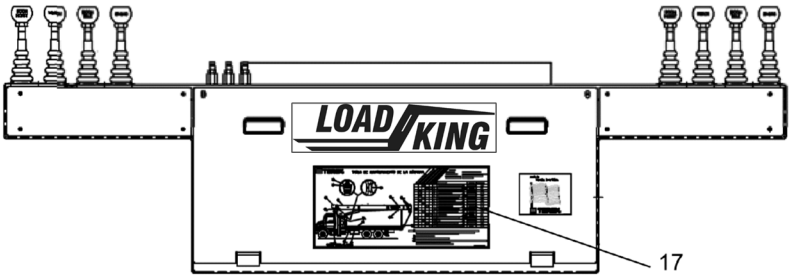

CONTROL CONSOLE

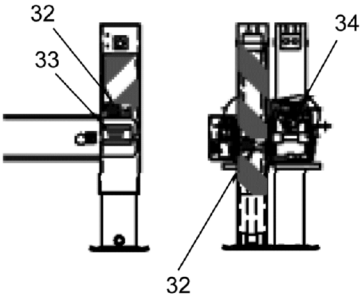

AUX OUTRIGGER OUT & DOWN

REF	PART NO.	DESCRIPTION	QTY
	T108937 (Rev. C)	*Spanish Decals Kit*	
1	1007050	Decal - Personnel Lifting	2
2	1007048	Decal - Skin Injection	2
3	1007046	Decal - Entanglement	2
4	1007045	Decal - Battery Danger	1
5	1007047	Decal - Fall Hazard	3
6	1008762	Decal - All Signs & Charts, Spanish.	2
7	1007052	Decal - Electrocution HAZ Person - SPAN	4
8	1007049	Decal - No Ridestep/Platform	2
9	1006880	Decal - Electrocution Hazard	2
10	1006876	Decal - Jib Removal W/Lift	2
11	1007044	Decal - No Riding Boom/Jib/Load	4
12	1006878	Decal - Lanyard Hook Location	4
13	1006877	Decal - Load Line Crush Hazard	2
14	1007051	Decal - BM/Turret Crush Hazard	2
15	1007062	Decal - Console, C.S. - Spanish	1
16	1007061	Decal - Console, S.S. - Spanish	1
17	1008799	Decal - Machine Maintenance Chart, Spanish	1
18	1008800	Decal - Crane Hand Signals - Spanish	2
19	T108945	Decal - PTO Operate Instruct - Spanish	1
20	T139674	Decal - Crush Hazard, Stay Clear Load HORZ	4
21	T108935	Decal - Jib Pin	1
22	1008801	Decal - Operating Instructions - Spanish	2
23	1008758	Decal - Stability Certification - Spanish	1
24	1006879	Decal - Crush Hazard	2
25	1006875	Decal - Safe Elevated Access	2
26	1007063	Decal - Inching Winch Control	1
27	T141899	Decal - Fall Hazard	2
28	T140608	Decal - Crush Hazard, Stay Clear Load VERT	2
29	1007064	Decal - Fifth O/R Crushing	1
30	T108955	Decal - Fifth O/R Extend/Retract - Spanish	2
31	1007060	Decal - "A'' Frame O/R Crushing - Spanish	4
32	1007077	Decal - Out/Down O/R Crushing - Spanish	6
33	T136450	Decal - O/R Beam Extend - Spanish	2
34	T136451	Decal - O/R Beam Pin - Spanish	2
35	T119179	Decal - Danger Diesel Explosion/Burn	1
36	1008802	Product Registeration Decal - Spanish	1

CHAPTER NO. 5

MANUALS

REF	PART NO.	DESCRIPTION	QTY
	28-106-MANUALS (Rev. 00) *MANUALS*		
1	**1007507**	Manual Pack, English (see page 324)	1
1A	**1008707**	Manual Pack, Spanish (see page 325)	1
1B	**1008708**	Manual Pack, French (see page 326)	1

WHEN ORDERING PARTS, SPECIFY MODEL NUMBER, SERIAL NUMBER AND DESCRIPTION OF PARTS REQUIRED

REF	PART NO.	DESCRIPTION	QTY
	1007507 (Rev. 00)	*Manual Pack, English*	
1	1008713	Flash Drive-Operator's, Parts, Shop & Schematics, English	1
2	1008709	28-106 Parts Manual	1
3	1008710	28-106 Operator's Manual, English	1
4	12261-302	Customer Orientation & Operation Checkout	1
5	MC-1407	AEM Safety Manual	1
6	V-CR	AEM Safety Video	1
7	12261-644	Greer Insight Operation's Video - DVD	1
8	1007467	Load King Product Warranty Certificate-24 Month	1

REF	PART NO.	DESCRIPTION	QTY
	1008707 (Rev. 00)	*Manual Pack, Spanish*	
1	1008714	Flash Drive-Operator's, Parts, Shop & Schematics	1
2	1008709	28-106 Parts Manual	1
3	1008711	28-106 Operator's Manual	1
4	12261-302	Customer Orientation & Operation Checkout	1
5	MC-1407	AEM Safety Manual	1
6	V-CR	AEM Safety Video	1
7	12261-644	Greer Insight Operation's Video - DVD	1
8	1007468	Load King Product Warranty Certificate-24 Month	1

REF	PART NO.	DESCRIPTION	QTY
	1008708 (Rev. 00)	*Manual Pack, French*	
1	1008715	Flash Drive-Operator's, Parts, Shop & Schematics	1
2	1008709	28-106 Parts Manual	1
3	1008712	28-106 Operator's Manual	1
4	12261-302	Customer Orientation & Operation Checkout	1
5	MC-1407	AEM Safety Manual	1
6	V-CR	AEM Safety Video	1
7	12261-644	Greer Insight Operation's Video - DVD	1
8	1008238	Load King Product Warranty Certificate-24 Month	1

CHAPTER NO. 6

RECOMMENDED SPARE PARTS

RECOMMENDED SPARE PARTS

Part no.	Description	Qty	Page
400-04122	AUX O/R Switch	1	224, 229
400-05509	Bussmann Fuse Box	1	74
402-00049	Toggle Switch Enclosure	1	229
501-02018	Filter Element	1	97
540-00061	AUX Outrigger EXT Cylinder (Gray)	1	196
540-30181	AUX Vertical Outrigger Cylinder (Gray)	1	196
540-90105	Cylinder, HYD Boom Extend	1	35
550-00423	Valve, Main Boom (HUSCO)	1	266
559-00262	Valve, Relief	1	264
559-00263	Valve, Outrigger	1	224, 229
651-00415	Decal - No Riding Boom/ Jib/ Load	1	306
1006869	Decal-Hands Off Rail	1	238
651-00473	Decal - Battery Danger	1	306
652-00073	Decal - Hydraulic Oil Only	1	306
652-00496	Decal, Crane Hand Signals	1	238
654-00704	Decal - Final Vehicle Inspection	1	306
709-7304	Wear Pad 18.00 X 3.00 X 1.00	1	47, 52
709-7821	Switch	1	50
729-02235	Wear Pad, 6.75 X 1.75 X 0.75	1	30
729-02236	Wear Pad Side Boom	1	30
729-02819	Wear Pad, 8.25 X 2.50 x 0.50	2	191
729-02836	Wear Pad 7.00 X 1.75 X 0.75	1	30
729-02923	Wear Pad 3.50X1.50X0.50	1	30
861-90434	ATB Switch, HVY Duty	1	169
1037568	Breather, Hydraulic	1	99
1223-379	Switch Air	1	78
1223-1006	Plug	1	277
1223-1021	Lamp 12 V	1	80, 277
1223-1036	Throttle Switch	1	167
1223-1051	SW Rocker DPDT	1	74, 80, 277
1223-1081	SW Rocker MOM On-Off	1	74
12400-1003	Decal - Fire Extinguisher	1	306
1006841	Decal - Entanglement	1	306
12400-1516	Decal - Fall Hazard	1	306
221081	Seal Kit 6.250, 5.000, 1.250	1	37
221101	Seal Kit (Items 1 thru 9)	2	201
221125	Seal Kit (Items 1 thru 9)	2	203
223283	Kit seal 7.000 5.470	1	44
419264A	Platform Danger Decal (Load King TEL)	1	238
T105268	Shim, Wear Pad (0.100)	1	32
T105269	Shim, Wear Pad (0.063)	1	32

WHEN ORDERING PARTS, SPECIFY MODEL NUMBER, SERIAL NUMBER AND DESCRIPTION OF PARTS REQUIRED

RECOMMENDED SPARE PARTS

Part no.	Description	Qty	Page
T105270	Shim, Wear Pad (0.040)	1	32
T105856	Valve, Main Boom	1	119
T106560	Decal - Electrocution Hazard Stay Clear Personel	1	306
T109277	Target Plate, Proximity Switch	1	94, 164
T117684	Cylinder, HYD, Boom Hoist	1	21
T120217	Proximity Switch	1	193
T121958	Outrigger Switch Box Assembly	1	80
T121959	Switch Box, Outriggers	1	81
T127259	Decal-Remote Warning	1	238
1007054	Decal, Personnel Platform Electrocution	1	238